TECHNICAL INSTRUCTIONS

FOR

SAFETY RECALL 26TA23

FUEL TANK MAIN TUBE SUB-ASSEMBLY INSPECTION & REPLACEMENT

LAND CRUISER 2024–2027 MODEL YEAR

The repair quality of covered vehicles is extremely important to Toyota. All dealership technicians performing this Recall are required to successfully complete the most current version of the E-Learning course "Safety Recall and Service Campaign Essentials". To ensure that all vehicles have the repair performed correctly; technicians performing this Recall repair are required to currently hold at least one of the following certification levels:

TIC206B – Electrical Repair II

It is the dealership's responsibility to select technicians with the above certification level or greater to perform this Recall repair. Carefully review your resources, the technician skill level, and ability before assigning technicians to this repair. It is important to consider technician days off and vacation schedules to ensure there are properly trained technicians available to perform this repair at all times.

© 2026 Toyota Motor Sales, USA

I.OPERATION FLOW CHART

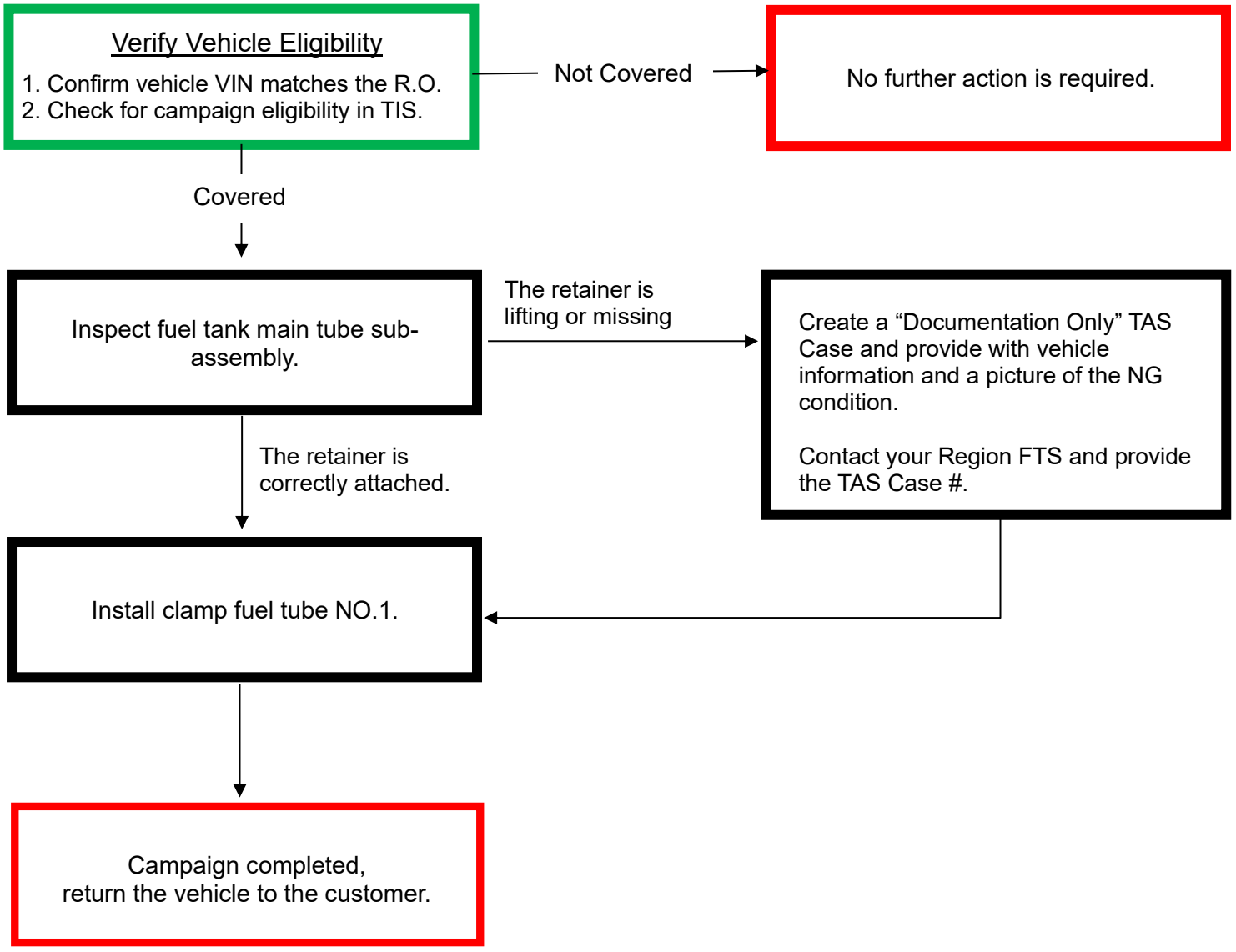

II.IDENTIFICATION OF AFFECTED VEHICLES

1. CHECK VEHICLE FOR CAMPAIGN ELIGIBILITY

a). Compare the vehicles VIN to the VIN listed on the Repair Order to ensure they match.
b). Check the TIS Vehicle Inquiry System to confirm the VIN is involved in this Campaign, and that it has not already been completed.

NOTICE:
TMNA warranty will not reimburse dealers for repairs completed on vehicles that are not affected or were previously completed, even by another dealer.

© 2026 Toyota Motor Sales, USA

III.PREPARATION

A. PARTS

The component below is for all vehicles.

Part Number	Part Name	Quantity
04006-45160	CLAMP FUEL TUBE, NO.1	1

IV.WORK PROCEDURE TABLE OF CONTENTS

BACKGROUND ..... SECTION V.
COMPONENTS ..... SECTION VI.
INSPECTION OF FUEL TANK MAIN TUBE SUB-ASSEMBLY ..... SECTION VII.
INSTALL CLAMP FUEL TUBE NO.1 ..... SECTION VIII.
APPENDIX ..... SECTION IX.

© 2026 Toyota Motor Sales, USA

V.BACKGROUND

a). Inspect the fuel tube connector of the fuel tank main tube sub-assembly and replace the part if necessary.

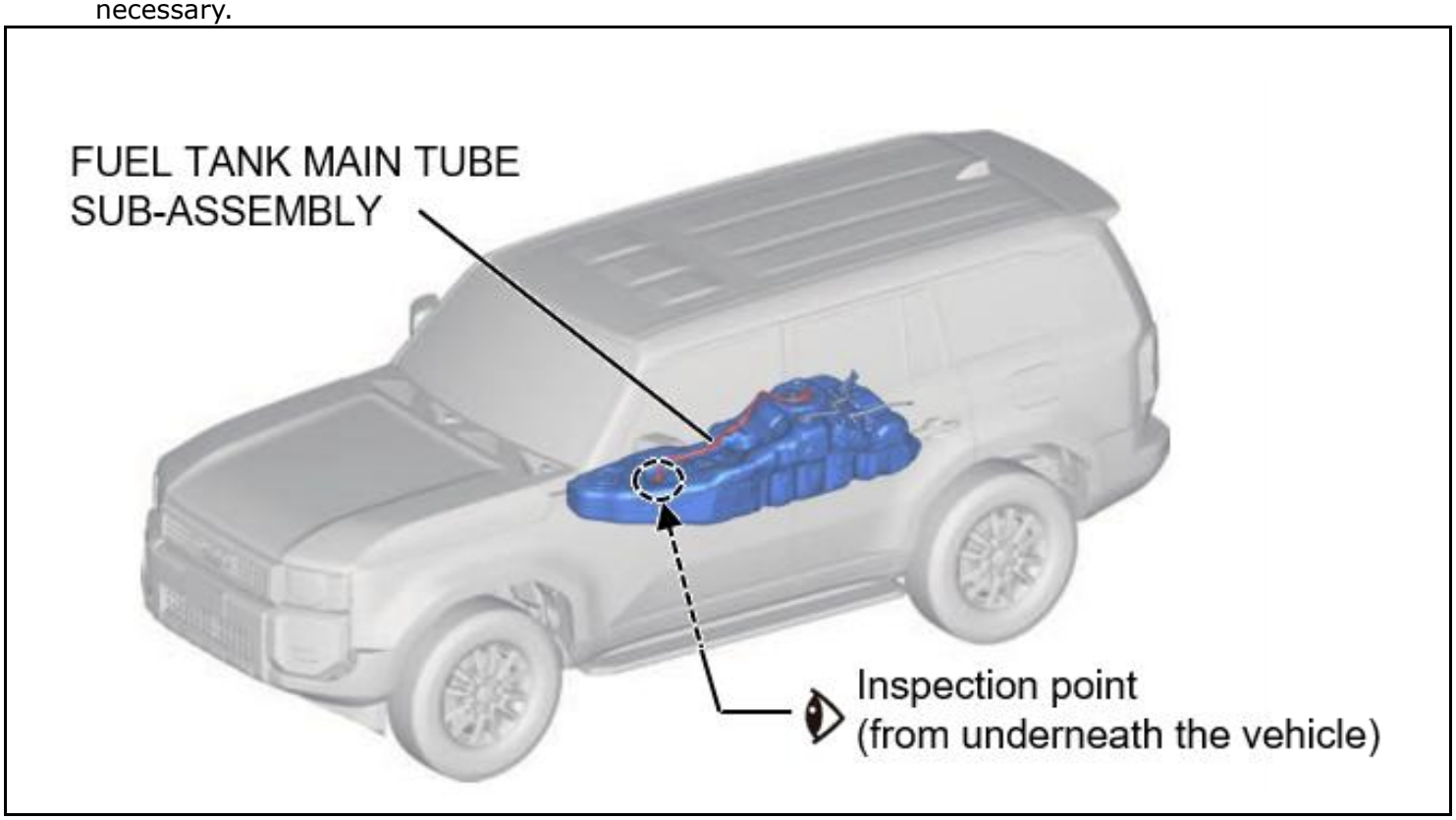

© 2026 Toyota Motor Sales, USA

VI.COMPONENTS

The component below is for all vehicles.

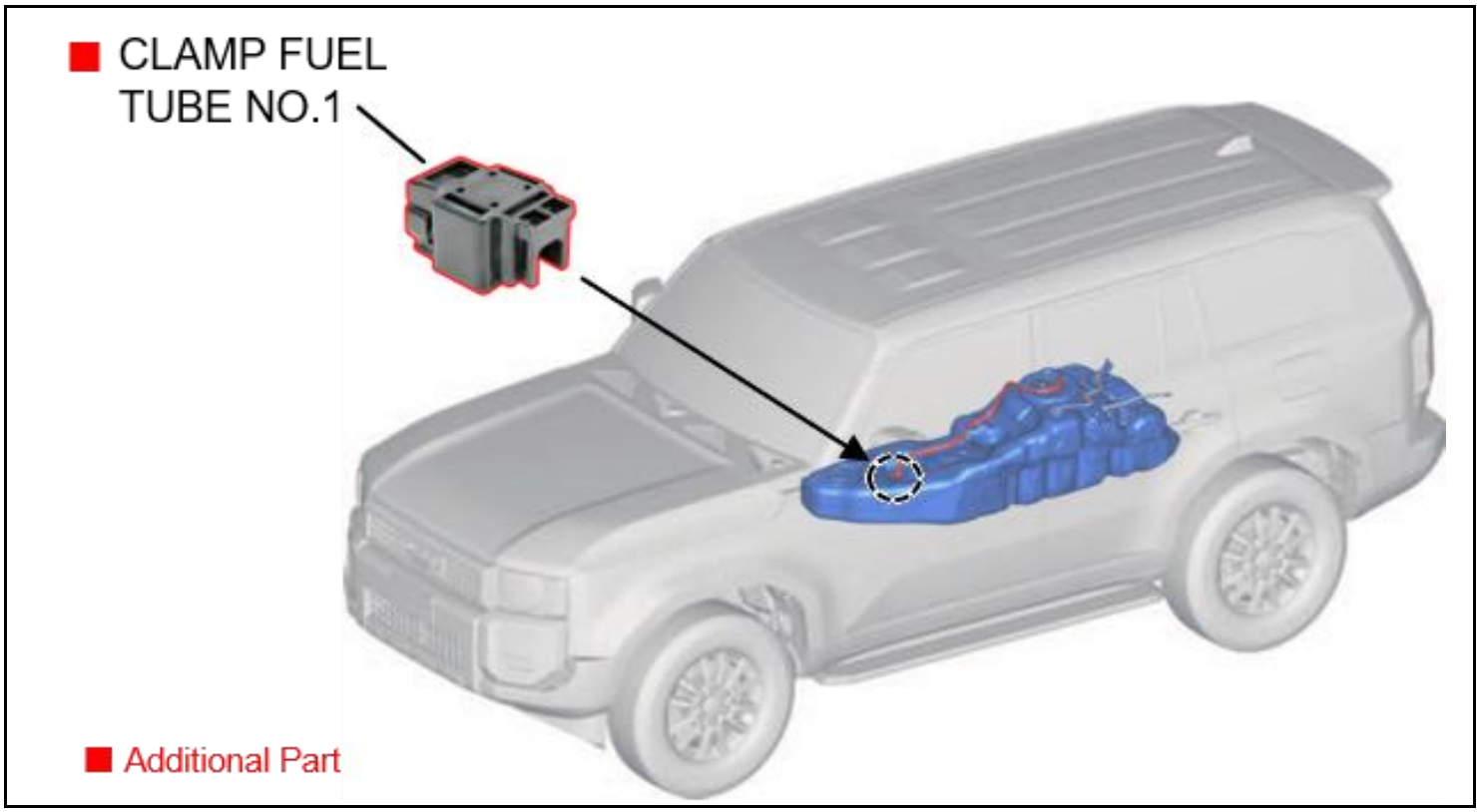

The components below are for replacement of fuel tank main tube sub-assembly only.

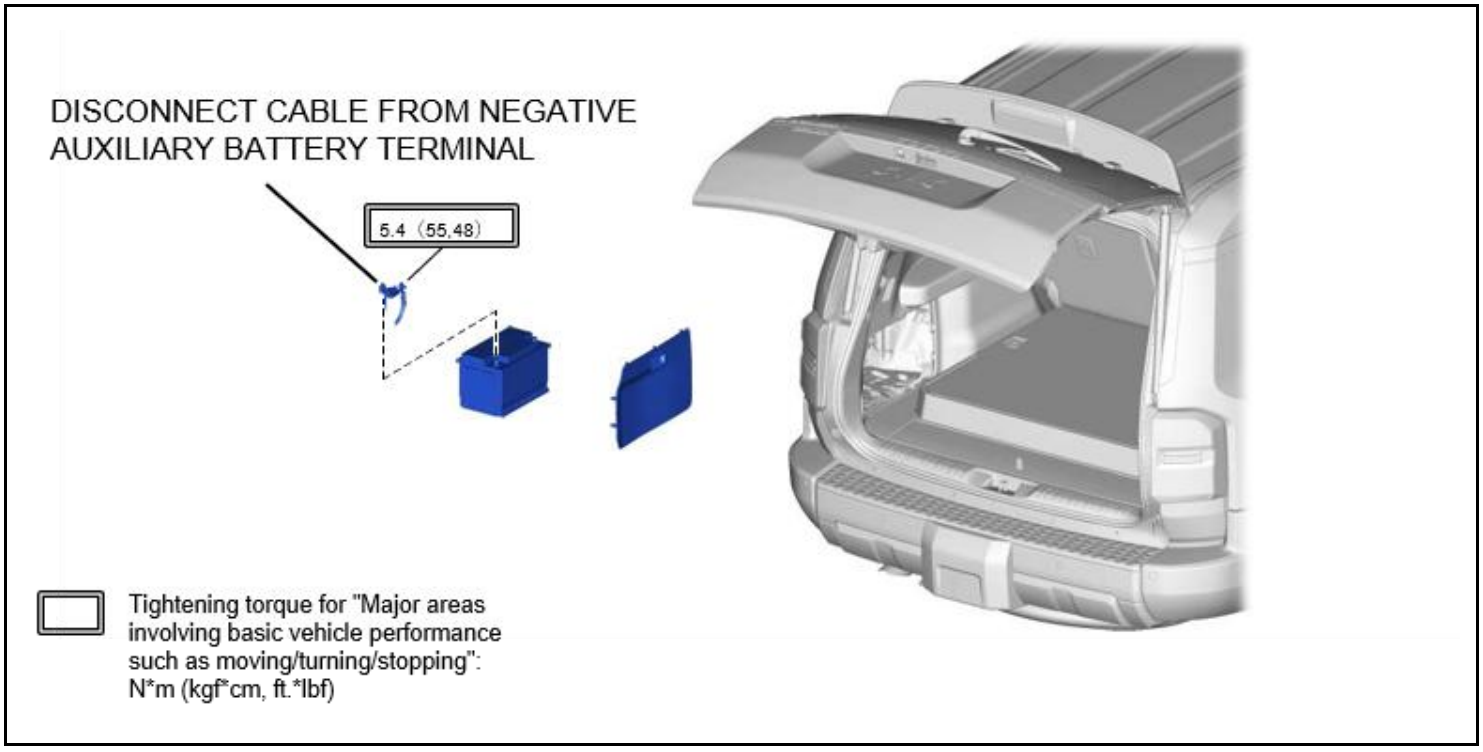

© 2026 Toyota Motor Sales, USA

Critical

Always remember "*SAFETY FIRST*".

VII.INSPECTION OF FUEL TANK MAIN TUBE SUB-ASSEMBLY

1. **SAFELY LIFT VEHICLE WITH LIFT**
2. **CLEAN THE AREA AROUND THE CONNECTOR**

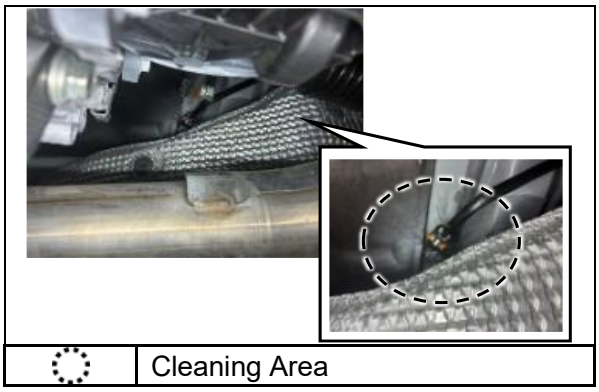

◌	Cleaning Area

a). Lift up the vehicle.
b). Clean the area around the tube connector.

3. **INSPECT THE FUEL TUBE CONNECTOR**

Component structure

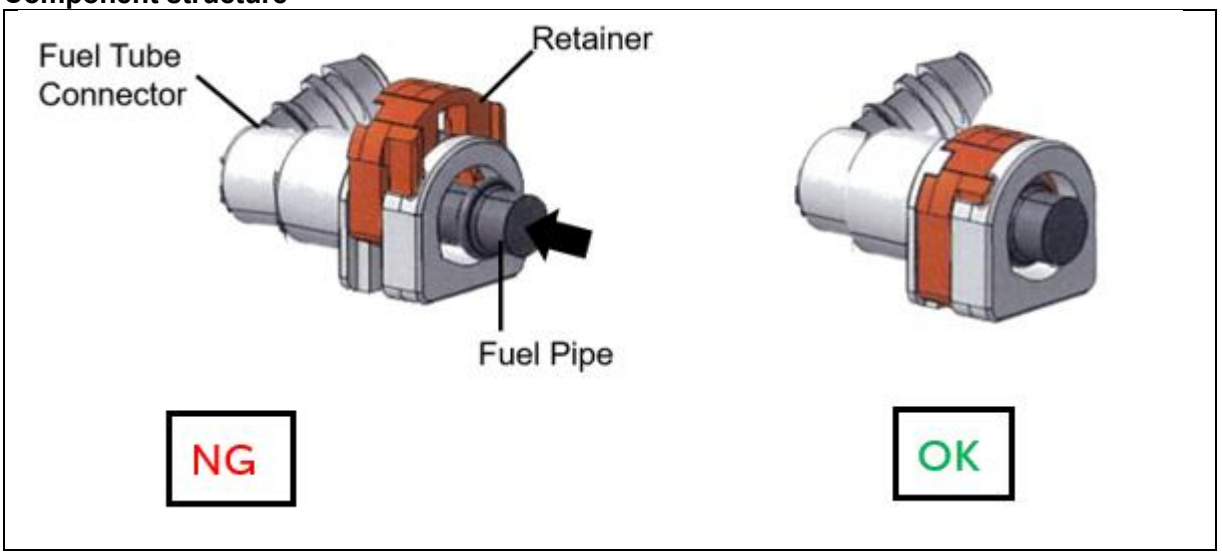

HINT:

- **The Fuel Tube Connector consists of the above components**
- **Visually inspect the fuel tube connector without pushing the retainer or pulling the tube.**

© 2026 Toyota Motor Sales, USA

<table>
<tr><th>Judgement</th><th>Condition of the fuel tube connector</th><th>Action</th><th>Reference</th></tr>
<tr><td rowspan="2">OK</td><td></td><td rowspan="2">INSTALL CLAMP FUEL TUBE NO.1.</td><td rowspan="2">Refer to section VIII. INSTALL CLAMP FUEL TUBE NO.1</td></tr>
<tr><td>The retainer (orange) is not lifted up.</td></tr>
<tr><td rowspan="5">NG</td><td></td><td rowspan="5">CAUTION:
If the retainer (orange) is lifting or missing, the fuel tank main tube sub-assembly may be damaged

Create a “Documentation Only” TAS Case and provide the following:
• Vin
• Mileage
• Picture of condition of the connection
• If there is any fuel smell or leak present
• Any additional details known about vehicle

Contact your Region FTS and provide the TAS Case #.

Approved TAS case will be required for additional parts and repair.</td></tr>
<tr><td>The retainer (orange) is lifted up</td></tr>
<tr><td></td></tr>
<tr><td>The retainer (orange) is missing.</td></tr>
</table>

© 2026 Toyota Motor Sales, USA

VIII.INSTALL CLAMP FUEL TUBE NO.1

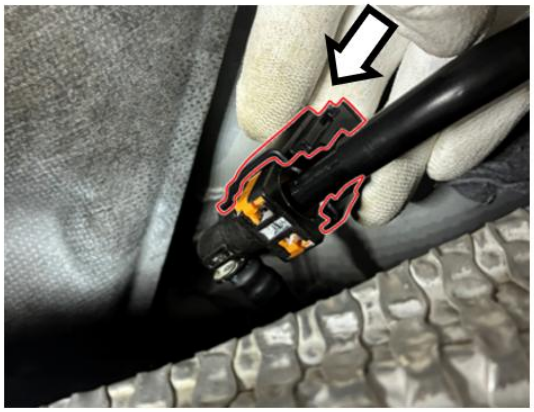

⇨	Mounting orientation

a). Install CLAMP FUEL TUBE NO.1 onto the fuel tube connector from the top of the vehicle.

HINT:

Confirm a distinct tactile engagement when the clamp is fully installed.



◌	Retainer (orange)

b). Confirm that the two retainers (orange) are visible from underneath the vehicle.

Judgement	Installation status		
OK		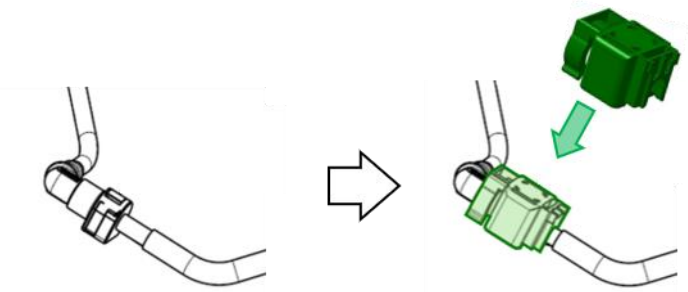	
	Installed from above.	Conceptual diagram	
NG			

© 2026 Toyota Motor Sales, USA

	Installed from below or from the side.

Emissions Repair Procedures for California Dealers

As this Safety Recall includes emission related parts, California dealers are requested to fill out the Vehicle Emissions Recall – Proof of Correction form and affix an Authorized Modification Label to the vehicle after repairs have been completed.

The vehicle owner may require the Proof of Correction form for vehicle registration renewal. ***It is important to note that the forms are an official state document, and blank forms must be secured to prevent misuse.***

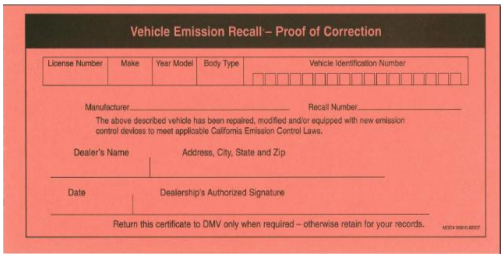
Vehicle Emission Recall – Proof of Correction

License Number | Make | Year Model | Body Type | Vehicle Identification Number

Manufacturer: Recall Number:

The above described vehicle has been repaired, modified and/or equipped with new emission control devices to meet applicable California Emission Control Laws.

Dealer's Name | Address, City, State and Zip

Date | Dealership's Authorized Signature

Return this certificate to DMV only when required – otherwise retain for your records.

Please complete the form and provide it to the owner. The first non-completed VINs will be submitted to the California state DMV by early May 2027. If the vehicle owner's warranty claim will not be processed and paid prior to this date, please be sure to complete a form and provide it to a California owner.

Install the Authorized Modifications Label after the repairs have been completed. Using a permanent marker, fill out the label and affix it to the location under the hood as indicated.



1-4	"Remedy for (Campaign Designation) "	6	Date Completed
5	Dealer Code	7	Campaign Designation

Form booklets and Authorization Labels can be ordered from the MDC (Booklet material number 00410-92007, Label material number 00451-00001-LBL).

◄ VERIFY REPAIR QUALITY ►

- **Confirm Fuel hose Connector retainer is fully seated.**
- **Confirm fuel hose clamp is fully clamped on fuel pipe.**
- **Confirm no fuel leak from fuel pipe No.1 connection.**
- **Confirm no DTC's.**

If you have any questions regarding this recall, please contact your regional representative.

© 2026 Toyota Motor Sales, USA

IX.APPENDIX

A. CAMPAIGN DESIGNATION DECODER

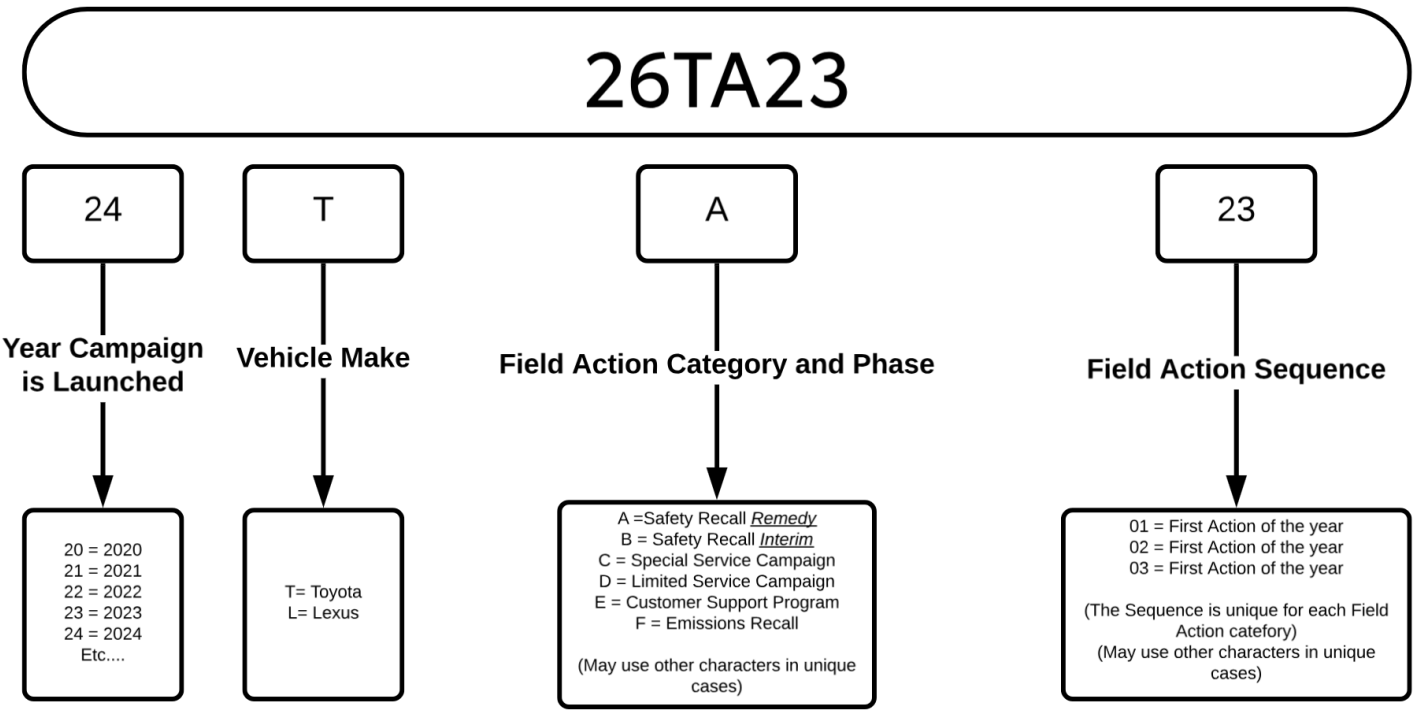

Examples:
20TA01 = Launched in 2020, Toyota, Safety Recall Remedy Phase, 1st Safety Recall Launched in 2020
21TC02 = Launched in 2021, Special Service Campaign, 2nd Special Service Campaign Launched in 2021
22TE05 = Launched in 2022, Customer Support Program, 5th Customer Support Program Launched in 2022

B. CAMPAIGN PARTS DISPOSAL

As required by Federal Regulations, please make sure all campaign parts (original parts) removed from the vehicle are disposed of in a way they will not be reused, ***unless requested for parts recovery return.***

© 2026 Toyota Motor Sales, USA