SERVICE PROCEDURE

25516
October, 2025

SUBJECT: SAFETY RECALL

Wiper Module in certain 2026 IC Bus™ CE Series commercial buses built 03/27/2025 thru 05/13/2025

CUSTOMER LETTER

Print ready (PDF file) copy of the Customer Letter

DEFECT DESCRIPTION

The wiper module crank-shaft assembly is not welded properly which can cause the left-side windshield wiper to not wipe the windshield.

An inoperative left-side windshield wiper may reduce visibility in certain driving conditions, increasing the risk of a crash.

MODELS INVOLVED

This safety recall involves certain 2026 IC Bus™ CE Series commercial buses built 03/27/2025 thru 05/13/2025.

ELIGIBILITY

This procedure applies ONLY to vehicles marked in the International® Service Portal℠ with Safety Recall 25516. Also complete any other open campaigns listed on the Service Portal at this time.

PARTS INFORMATION

Part Number	Part Description	Quantity
4279110C94	Wiper Linkage Assembly	1

Table 1 Parts Information

© 2025 IC Bus, LLC. All rights reserved.
All marks are trademarks of their respective owners.

SERVICE PROCEDURE

GOVERNMENT REGULATION: Engine fluid (oil, fuel, and coolant) may be a hazard to human health and the environment. Handle all fluid and other contaminated materials (such as filters and rags) in accordance with applicable regulations. Recycle or dispose of engine fluids, filters, and other contaminated materials according to applicable regulations.

WARNING! To prevent personal injury and / or death, or damage to property, park vehicle on hard flat surface, turn the engine off, set the parking brake and install wheel chocks to prevent the vehicle from moving in either direction.

WARNING! To prevent personal injury and / or death, always wear safe eye protection when performing vehicle maintenance.

WARNING! To prevent personal injury and / or death, or damage to property, keep flames or sparks away from vehicle and do not smoke while servicing the vehicle's batteries. Batteries expel explosive gases.

WARNING! To prevent personal injury and / or death, or damage to property, remove the ground cable from the negative terminal of the battery box before disconnecting any electrical components. Always connect the ground cable last.

CAUTION! To prevent damage to property or vehicle components, NEVER use an impact wrench when performing this procedure.

CAUTION! To prevent damage to property, do not attempt to grasp the wiper blades or arms while they are in motion. Attempting to stop the arms or blades in motion may result in component damage. If blades are frozen to the windshield, thaw them before attempting to operate.

1. Park vehicle on flat surface.
2. Shift transmission to Park (P) or Neutral (N) and set parking brake.
3. Ensure windshield wiper control is switched OFF and wiper arms are in the parked position.
4. Turn vehicle ignition to Key OFF position.

© 2025 IC Bus, LLC. All rights reserved.
All marks are trademarks of their respective owners.

5. Install wheel chocks.

6. Unlatch and open hood.

0000491790

Figure 1. Wiper Motor Date Code Location

1. Date code

SUSPECT WIPER MOTOR DATE CODE

March 3, 2025	March 27, 2025
March 4, 2025	March 28, 2025
March 5, 2025	April 3, 2025
March 6, 2025	April 4, 2025
March 11, 2025	April 8, 2025
March 12, 2025	April 9, 2025
March 13, 2025	April 10, 2025
March 14, 2025	April 11, 2025
March 22, 2025	April 14, 2025
March 24, 2025	April 15, 2025
March 25, 2025	April 16, 2025
March 26, 2025	April 17, 2025

Table 2 Suspect Wiper Motor Date Code

© 2025 IC Bus, LLC. All rights reserved.
All marks are trademarks of their respective owners.

7. Inspect and compare date code (Figure 1, Item 1) on wiper motor to Table 2 Suspect Wiper Motor Date Code:

    a. If date code (Figure 1, Item 1) on wiper motor is not listed in the suspect wiper motor date code table, go to Step 30.

    b. If date code (Figure 1, Item 1) on wiper motor is listed in the suspect wiper motor date code table, continue to Step 8.

NOTE: Images displayed in this procedure may have components removed or angled for clarity.

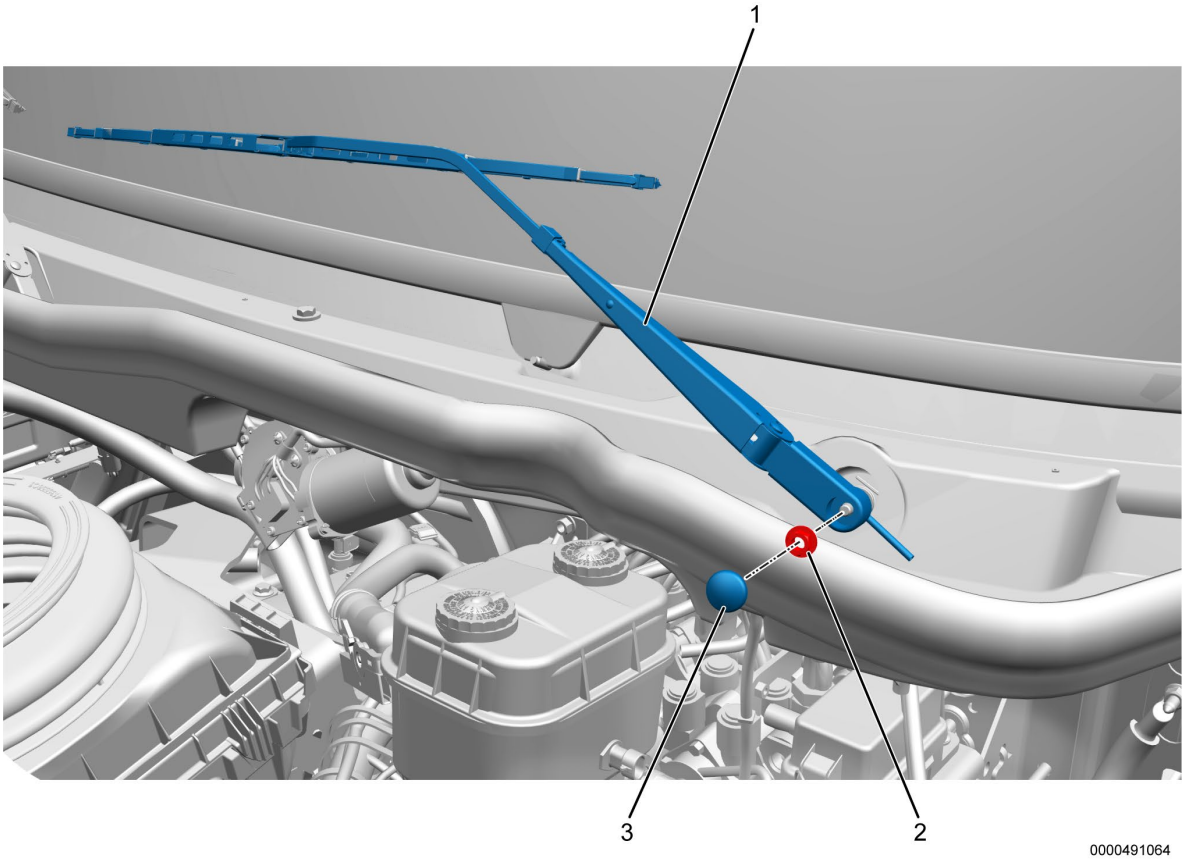

Figure 2. Windshield Wiper Arm
1. Wiper arm
2. M10 nut
3. Cap

8. Remove cap (Figure 2, Item 3) from windshield wiper arm (Figure 2, Item 1) and save for reuse.

9. Remove M10 nut (Figure 2, Item 2) and save for reuse. Remove wiper arm (Figure 2, Item 1) and save for reuse.

10. Repeat Steps 8−9 for opposite side.

© 2025 IC Bus, LLC. All rights reserved.
All marks are trademarks of their respective owners.

11. Disconnect the washer fluid hose.

12. Remove the cowl tray lid fasteners and save for reuse.

13. Remove the cowl tray lid by lifting upward, and over the antenna and mast, if equipped.

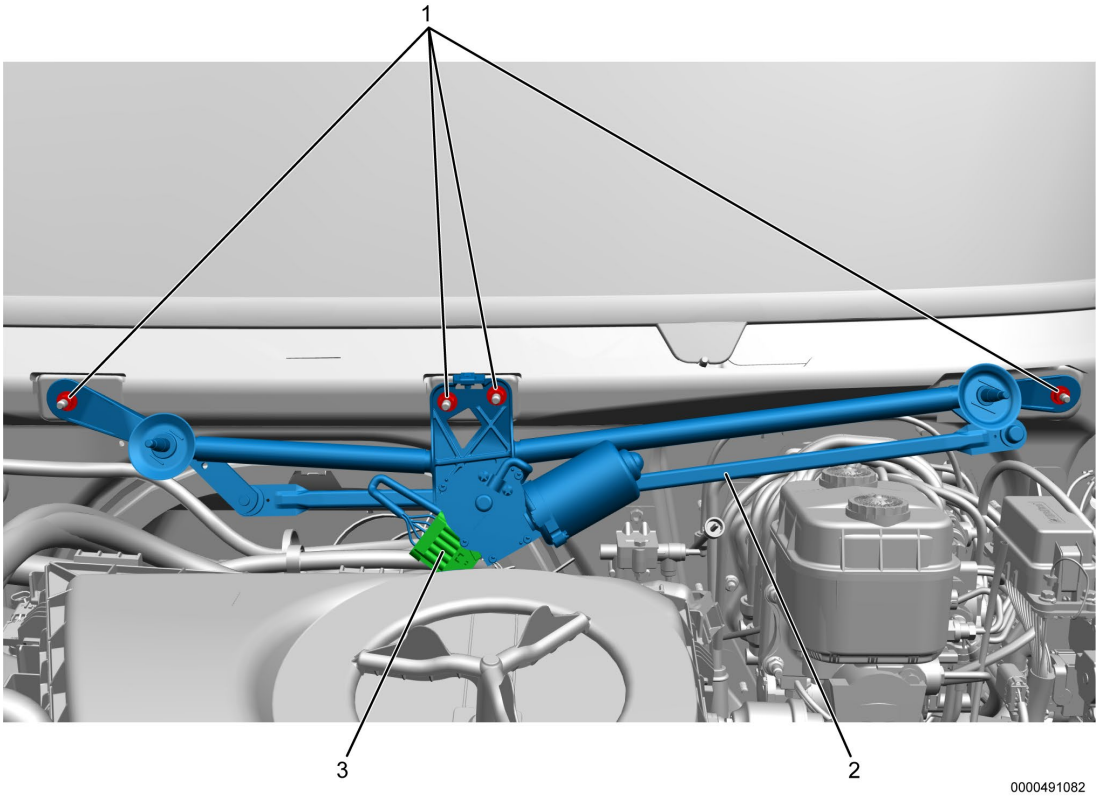

Figure 3. Linkage Assembly

1. M8 mounting nut (4)
2. Linkage assembly
3. Electrical connector

14. Disconnect electrical connector (Figure 3, Item 3). Remove any tie straps as needed.

15. Remove four M8 mounting nuts (Figure 3, Item 1) from mounting studs and save for reuse.

16. Remove windshield wiper linkage assembly (Figure 3, Item 2) and discard.

17. Align new linkage assembly (Figure 3, Item 2) to mounting studs. Loosely install previously removed four M8 mounting nuts (Figure 3, Item 1).

18. Using torque wrench, tighten four M8 mounting nuts to 16−18 lb-ft (22−25 N·m).

© 2025 IC Bus, LLC. All rights reserved.
All marks are trademarks of their respective owners.

19. Connect electrical connector (Figure 3, Item 3) to linkage assembly. Install tie straps as needed.

20. Reinstall cowl tray lid with fasteners saved during disassembly.

21. Reconnect washer fluid hose.

22. Using a soft wire brush, clean wiper motor pivot shaft knurls.

23. Position wiper arm (Figure 2, Item 1) on motor pivot shaft.

24. Install M10 nut (Figure 2, Item 2). Using torque wrench, tighten M10 nut to 11−12.5 lb-ft (15−17 N·m).

25. Install cap (Figure 2, Item 3).

26. Repeat Steps 22−25 for opposite side.

27. Turn vehicle ignition to Key ON, Engine OFF (KOEO) position.

28. Verify proper operation by cycling the windshield wiper for two cycles, turn OFF wipers, and verify the arms are parked in the correct location.

29. Turn vehicle ignition to Key OFF position.

30. Close and latch hood.

31. Remove wheel chocks.

END OF SERVICE PROCEDURE

LABOR INFORMATION

Operation Number	Description	Time
A40-25516-1	Inspect Date Code Only	0.2 hr
A40-25516-2	Inspect Date Code and Replace Windshield Wiper Assembly if Required	0.4 hr

Table 3 Labor Information

© 2025 IC Bus, LLC. All rights reserved.
All marks are trademarks of their respective owners.

CAMPAIGN IDENTIFICATION LABEL

Each vehicle corrected in accordance with this campaign must be marked with a CTS-1075 Campaign Identification Label.

Complete the label and attach on a clean surface next to the vehicle identification number (VIN) plate.

ADMINISTRATIVE / DEALER RESPONSIBILITIES

WARRANTY CLAIMS

Warranty claim expense is to be charged to Warranty. Claims are to be submitted in the normal manner, making reference to Safety Recall 25516.

Section 7 of the Warranty Policy and Procedures Manual contains further information related to the submission and processing of AFC / Recall claims.

As with all claim submissions, items acquired locally must be submitted in the “Other Charges” tab. The cost of any bulk items (such as a bag of cable tie straps, roll of wire, barrel of oil, or tube of silicone) should be prorated for the cost of the individual pieces / amount used during each repair.

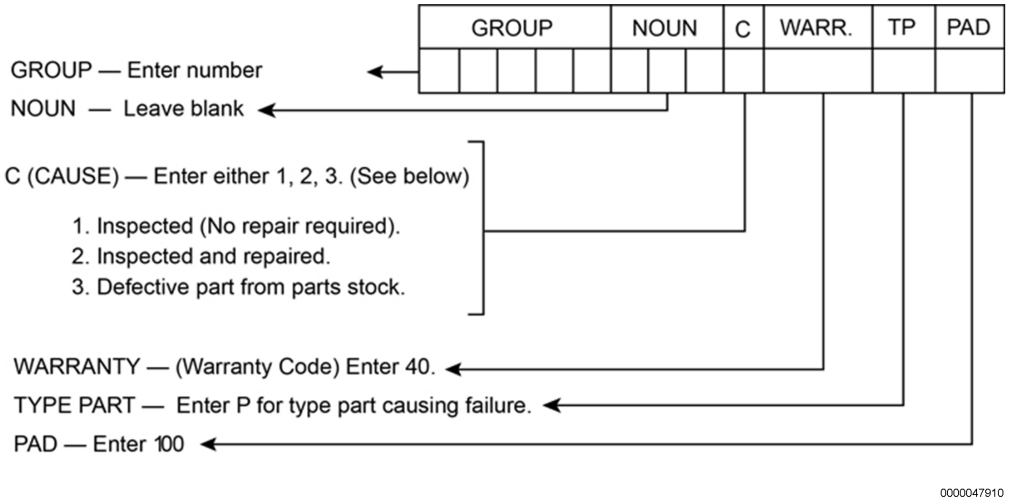

© 2025 IC Bus, LLC. All rights reserved.
All marks are trademarks of their respective owners.

UNITED STATES AND POSSESSIONS

The National Traffic and Motor Vehicle Safety Act, as amended, provides that each vehicle that is subject to a vehicle recall campaign must be adequately repaired within a reasonable time after the owner has tendered it for repair. A failure to adequately repair within 60 days after a tender of a vehicle is prima facie evidence of failure to repair within a reasonable time. If the condition is not adequately repaired within 60 days, the owner may be entitled to replacement with an identical or reasonable equivalent vehicle at no charge, or to a refund of the purchase price less a reasonable allowance for depreciation.

Dealers must correct all vehicles subject to this campaign at no charge to the owner, regardless of mileage, age of vehicle, or ownership, from this time forward.

Dealers should proceed immediately to make necessary correction to units in inventory. Federal law prohibits a dealer from delivering under a sale or lease, a new motor vehicle or any new or used item of motor vehicle equipment (including a tire) covered by the notification of a recall until the defect or noncompliance is remedied.

Dealers must make every effort to promptly schedule an appointment with each owner to repair his or her vehicle as soon as possible. However, consistent with the customer notification, dealers are expected to complete the repairs on the mutually agreed upon service date.

Dealers involved in the recall process will be furnished a listing of owner names and addresses to enable them to follow up with owners and have the vehicles corrected. Use of this listing must be limited to this campaign because the list may contain information obtained from state motor vehicle registration records, and the use of such motor vehicle registration data for purposes other than this campaign is a violation of law in several states.

CANADA

Dealers must correct all vehicles subject to this campaign at no charge to the owner, regardless of mileage, age of vehicle, or ownership, from this time forward.

Dealers should proceed immediately to make necessary correction to units in inventory. All inventory vehicles subject to this recall campaign must be corrected prior to sale, transfer or delivery. If vehicles have been sold or transferred and you are in receipt of Customer Notification Letters and

© 2025 IC Bus, LLC. All rights reserved.
All marks are trademarks of their respective owners.

Authorization for Recall Service cards for those vehicles, the transfer location or customer must be notified immediately from your dealer location.

Dealers must make every effort to promptly schedule an appointment with each owner to repair his or her vehicle as soon as possible. However, consistent with the customer notification, dealers are expected to complete the repairs on the mutually agreed upon service date.

Dealers involved in the recall process will be furnished a listing of owner names and addresses to enable them to follow up with owners and have the vehicles corrected. Use of this listing must be limited to this campaign because the list may contain information obtained from state motor vehicle registration records, and the use of such motor vehicle registration data for purposes other than this campaign is a violation of law in several states.

EXPORT

Export Distributors should proceed immediately to make necessary correction to units in inventory. All inventory vehicles subject to this recall campaign must be corrected prior to sale, transfer or delivery. If vehicles have been sold or transferred and you are in receipt of Customer Notification Letters and Authorization for Recall Service cards for those vehicles, the transfer location or customer must be notified immediately from your distributor location.

Export Distributors are to submit warranty claims in the usual manner making reference to this recall number.

Export Distributors are expected to provide full cooperation and follow-up with respect to this important subject matter. If you have any questions or need further assistance, please contact the Regional Service Manager at your regional office.

IC Bus, LLC

© 2025 IC Bus, LLC. All rights reserved.
All marks are trademarks of their respective owners.