Recall Service Bulletin

Recall Service Bulletin
RSB25-110-001

DATE: 10/4/2025

APPLIES TO: This service bulletin applies to certain model year 2023-2026 Gladiator, Metro Star, FC-94, and KME Panther, and 2024-2025 KME Predator model emergency response chassis cabs built between November 2023 and August 2025.

NHTSA/TC Id: 25V584/TC2025462

CONDITION: Door may experience a failure to open.

CORRECTION: Inspect door latch logic. Replace if non-conforming.

LABOR ALLOCATION: Inspection: 0.5 hour per truck. Replacement: 1 hour per door

CLASSIFICATION: V3

Parts: Replacement door latch logic parts can be obtained by contacting andy.haigh@spartanmotors.com or by calling 1-800-867-6478.

GENERAL INSTRUCTIONS:

Thoroughly review entire service bulletin before starting work. If there are questions or concerns with steps defined in this service bulletin, contact Spartan Fire, LLC. Customer & Product Support Group.

All applicable industry safety standards must be followed when performing work identified in this procedure.

Service Bulletins are intended for use by Professional Technicians only. They are written to guide Professional Technicians in performing service to vehicles of specific nature in conjunction with industry standards. Professional Technicians should be appropriately trained on industry standards and have the tools and equipment to perform procedures safely and properly.

Step By Step Instructions

Inspection:

The inspection below can be performed by the owner if advantageous for the dealer and customer. Otherwise, the dealer will perform the inspection and only the dealer will perform the replacement of any non-conforming latch logic. Record the inspection findings in Table 2.1 below and email results to andy.haigh@spartanmotors.com or report them to 1-800-867-6478. Also include the non-conforming latch logic locations in the invoice upon submittal for payment.

Door Latch Logic Inspection Results		
SO#		
	Conforming	Non-Conforming
Left Front		
Right Front		
Left Rear		
Right Rear		

Table 2.1

Service Bulletins are intended for use by Professional Technicians only. They are written to guide Professional Technicians in performing service to vehicles of specific nature in conjunction with industry standards. Professional Technicians should be appropriately trained on industry standards and have the tools and equipment to perform procedures safely and properly.

Inspection Instructions

Using the 5/16 dowel pin perform the following procedure.

1) Ensure latch logic arm is in the full upright position before performing inspection. If logic arm appears as shown in Figure 3.1, proceed with the inspection procedure on page 3. If latch appears like Figure 3.2, move arm into most upward position before proceeding with the inspection procedure.

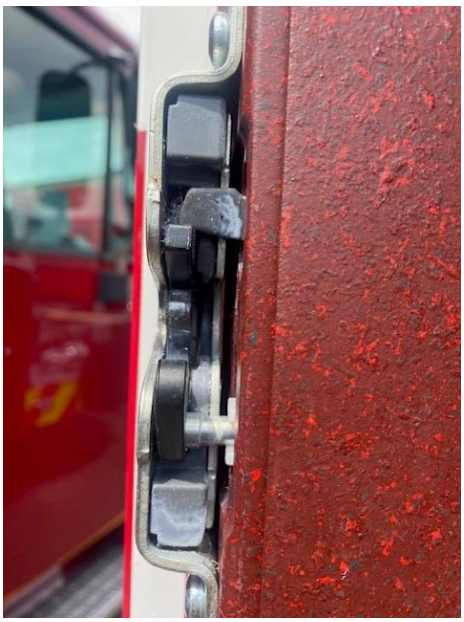

Figure 3.1
Arm in upward position.
Ready for Inspection.

Figure 3.2
Arm down, move upward before
proceeding with the inspection procedure.

Service Bulletins are intended for use by Professional Technicians only. They are written to guide Professional Technicians in performing service to vehicles of specific nature in conjunction with industry standards. Professional Technicians should be appropriately trained on industry standards and have the tools and equipment to perform procedures safely and properly.

2) Attempt to insert the dowel pin into the cavity between the latch logic arm and the latch housing. *See Figure 4.1*

Figure 4.1

Service Bulletins are intended for use by Professional Technicians only. They are written to guide Professional Technicians in performing service to vehicles of specific nature in conjunction with industry standards. Professional Technicians should be appropriately trained on industry standards and have the tools and equipment to perform procedures safely and properly.

3) If the pin can be inserted past the latch logic arm, then the latch logic arm is non-conforming and will require replacement. *See Figure 5.1 on left.*

4) If the pin cannot be inserted past the latch logic arm, then the latch logic arm is conforming and does not require replacement. *See Figure 5.2 on the right.*

5) Record findings on the table on *Table 2.1.* Contact Andy Haigh at andy.haigh@spartanmotors.com with results and for procurement of replacement latch logic assemblies.

Non-Conforming
Pin inserted past latch arm.
Replace latch logic

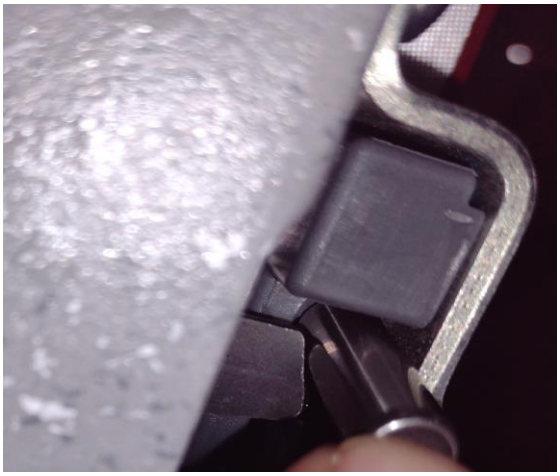

Figure 5.1

Conforming
Pin does not insert past latch arm.
No replacement needed.

Figure 5.2

Service Bulletins are intended for use by Professional Technicians only. They are written to guide Professional Technicians in performing service to vehicles of specific nature in conjunction with industry standards. Professional Technicians should be appropriately trained on industry standards and have the tools and equipment to perform procedures safely and properly.

Replacement Instructions

Once the door location(s) that require replacement have been verified, proceed with the replacement instructions below.

1) Remove inner door panel to achieve access to the door latch logic mechanism. See Figure 6.1.

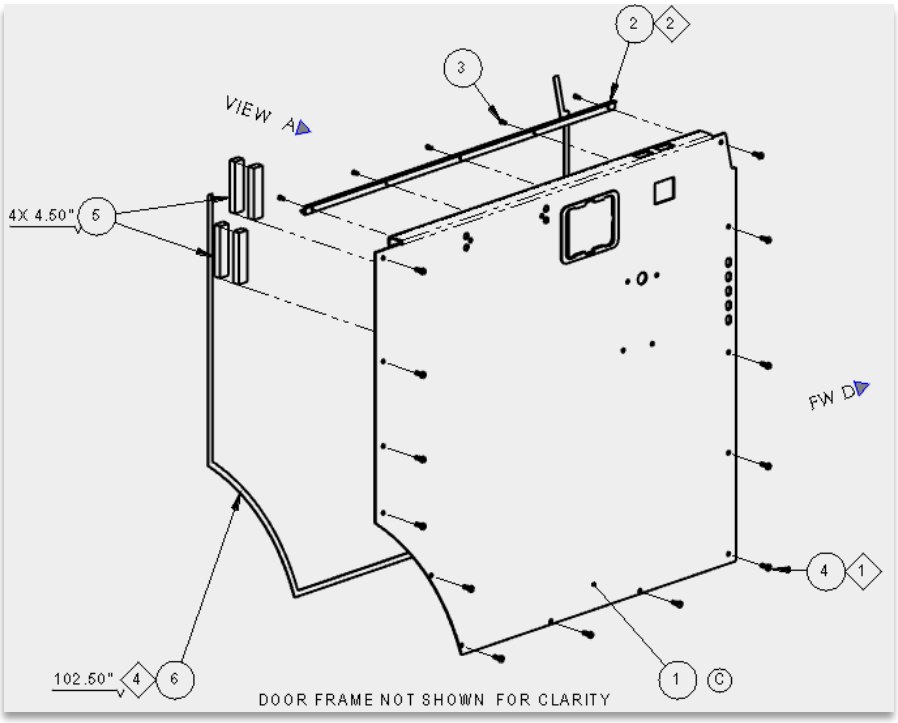

ITEM	PART NUMBER	DESCRIPTION	QTY
1	3241-EE4-XXX	PNL ASSY-FR DR TRIM, (1)PC AL LH	1
1	4871-EE4-XXX	PANEL ASM-FRT DOOR TRIM, 1 PIECE ALUM, LH, PWR WDO	1
2	0516-EE3-001	WIPER-DOOR WINDOW	1
3	AD54ABS	RIVET-POP ALUM,.156"DIA,GRIP RANGE=.188"-.25"	5
4	0202-BB1-033	1/4-20 X .75 TORX PAN HD 18-8 SS, BLACK OXIDE	13
5	0340-EE4-003	SEAL - FOAM, 4.5"	1.5 FT
6	0521-EE3-001	GASKET-RUBBER 1/16" X 1/2"	8.54 FT

Figure 6.1

Service Bulletins are intended for use by Professional Technicians only. They are written to guide Professional Technicians in performing service to vehicles of specific nature in conjunction with industry standards. Professional Technicians should be appropriately trained on industry standards and have the tools and equipment to perform procedures safely and properly.

2) Some inner door panels may be in two pieces as shown in *Figure 7.1*.

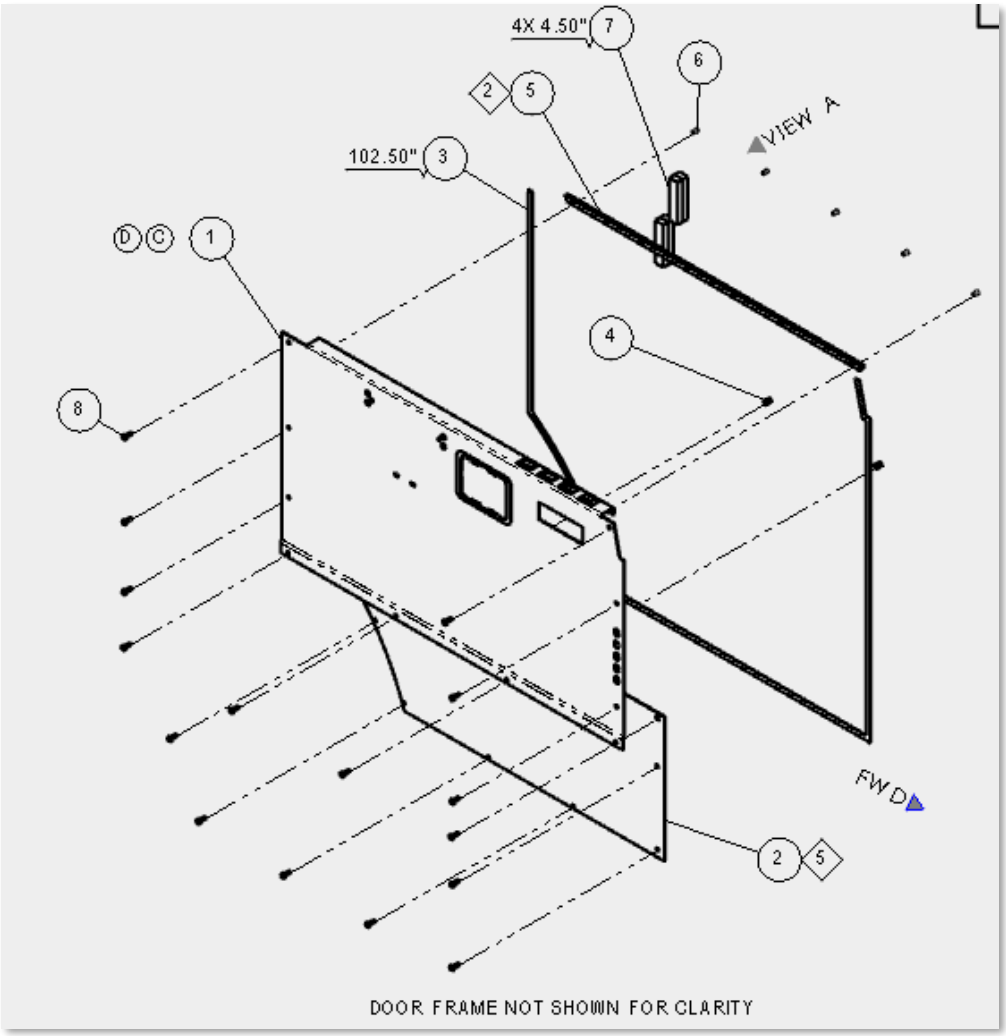

Figure 7.1

Service Bulletins are intended for use by Professional Technicians only. They are written to guide Professional Technicians in performing service to vehicles of specific nature in conjunction with industry standards. Professional Technicians should be appropriately trained on industry standards and have the tools and equipment to perform procedures safely and properly.

3) Once access is gained to the door latch logic fasteners inside the door, remove and retain the two 6mm X 1.0 X 16mm that secure the latch logic. *See Figure 8.1*

4) Remove the latch logic assembly.

5) Install the new replacement latch logic assembly with the previously removed fasteners.

6) Torque fasteners to 45 in. lbs.

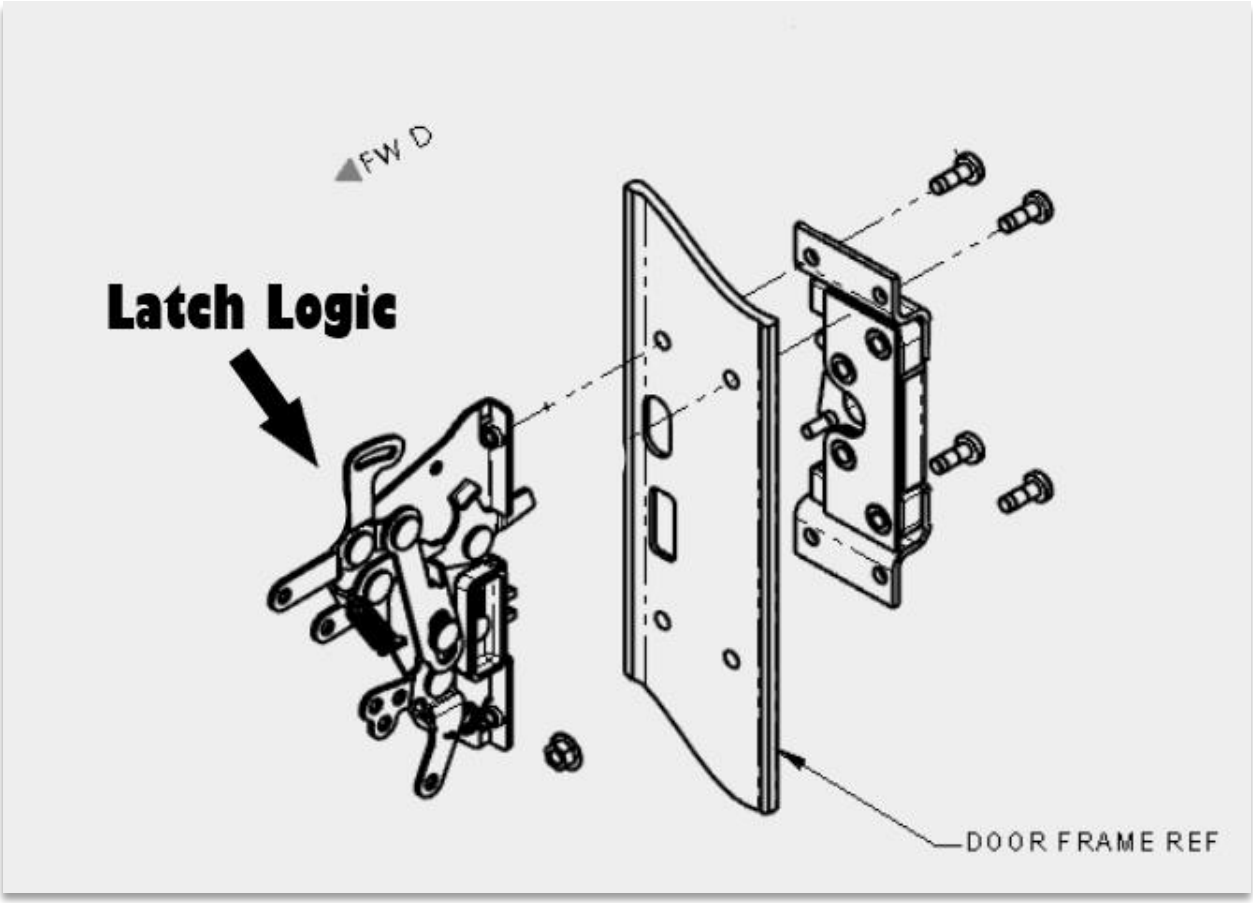

Figure 8.1

Service Bulletins are intended for use by Professional Technicians only. They are written to guide Professional Technicians in performing service to vehicles of specific nature in conjunction with industry standards. Professional Technicians should be appropriately trained on industry standards and have the tools and equipment to perform procedures safely and properly.

7) Reinstall inner door panel previously removed in step 1.

8) Perform the inspection process again from page 3-5 to ensure the latch logic arm is the proper length.

9) Before shutting the door, cycle the door latch mechanism to the latched position and back to unlatched to ensure proper function before shutting the door.

10) Open and close the door to ensure proper latch operation.

11) Indicate on the invoice to Spartan Fire LLC the door latch logic (s) that were deemed non-conforming and were replaced.

Service Bulletins are intended for use by Professional Technicians only. They are written to guide Professional Technicians in performing service to vehicles of specific nature in conjunction with industry standards. Professional Technicians should be appropriately trained on industry standards and have the tools and equipment to perform procedures safely and properly.