Can-Am® On-Road

WARRANTY BULLETIN
SAFETY CAMPAIGN

⚠ WARNING: All involved customers must be notified, all involved units must be corrected as per instruction herein.

Campaign no.: 2020-0012
2021-0008
2022-0021
2023-0008

March 17, 2023 Subject: **Brake Lights May Stay Illuminated – Increased Risk of Crash** No. **2023-6**

IMPORTANT

What should you do?
– Do not sell or deliver any involved vehicle that you have in stock as federal law requires you to complete the recall service on these vehicles before retail delivery.
– Unregistered vehicles cannot be sold until the campaign is performed.
– Contact all of your customers who purchased an affected vehicle and inform them about this Safety Recall notice.

MODEL YEAR	MODEL	ADMISSIBLE UNITS
All Serial Numbers MY20 to MY21	Spyder RT	Go to BOSSWeb/Warranty/Campaign Monitoring to know the quantity of units in your inventory impacted by this campaign
Specific Serial Numbers MY22 to MY23		
Specific Serial Numbers MY22 to MY23	Ryker	

IMPORTANT
– When a vehicle comes in for service, always type the VIN in Knowledge Center to check for pending campaigns or alerts.

– When performing any work on a vehicle, it is good practice to connect it to BUDS2 to ensure that all needed updates are done.

Printed in Canada. (rbg2023-006 en JT)
©2023 Bombardier Recreational Products Inc. and BRP US Inc. All rights reserved.
®™ and the BRP logo are trademarks of Bombardier Recreational Products Inc. or its affiliates.

PROBLEM

Potential contamination or component friction in the brake light switch (BLS) may cause the brake lights to stay illuminated, even when the brake pedal is not pressed. If the brake lights remain illuminated, it can fail to alert other motorists of the rider's intention and increase the risk of a crash.

SOLUTION

MODEL	CORRECTIVE ACTION
MY20 & MY21 RT	Replace brake light switch, readjust BLS (1.5 turn) and add spring on BLS
MY22 & MY23 RT	Add spring on BLS
MY22 & MY23 Ryker	Readjust BLS (1.0 turn) and add spring on BLS

REQUIRED PARTS

MODEL	DESCRIPTION	PART NUMBER	QTY
MY20, & MY21 RT	Brake Light Switch (BLS) Kit	219800558	1
MY22 & MY23 RT	Spring	705602204	1
MY22 & MY23 Ryker	Spring	705602204	1

NOTE: The parts for the repair will gradually be available starting April 3, 2023 and will be released progressively, upon availability, to ensure an even distribution across the network.

CORRECTIVE ACTION

REPLACING THE BRAKE LIGHT SWITCH (BLS)

MY20 & MY21 Spyder RT

1. Remove the RH side panels.

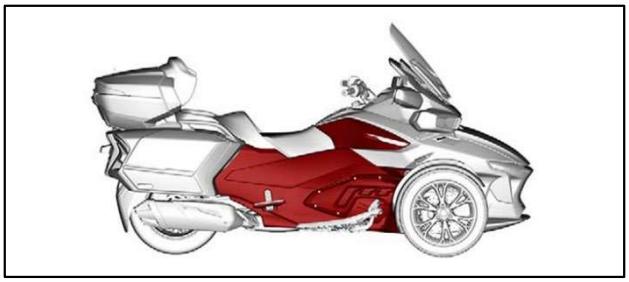

2. Disconnect the BLS connector.
3. Cut the locking ties retaining the BLS harness.

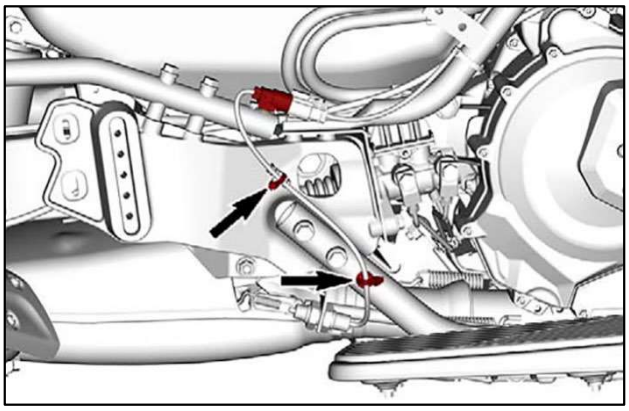

4. Remove the BLS.
5. Install the new BLS. The installation is the reverse of the removal procedure.
6. Proceed to *Adjusting the Brake Light Switch.*

ADJUSTING THE BRAKE LIGHT SWITCH (BLS)

MY20 & MY21 Spyder RT

1. Connect the vehicle to the BRP diagnostic software (BUDS2) and go to:
   - **Measurements** page
   - **VCM** Basic tab

2. Untighten the forward and rear jam nuts of the BLS.

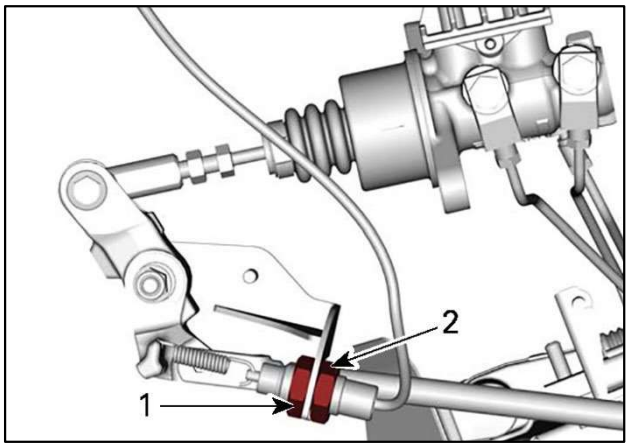

1. Rear jam nut
2. Forward jam nut

3. Hand tighten the forward jam nut until the brake lights turn on and validate that BUDS2 displays true for the BLS.

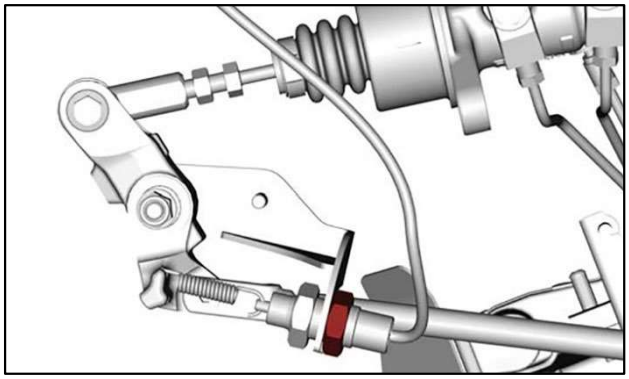

4. Carefully untighten the forward jam nut **1.5** turns.

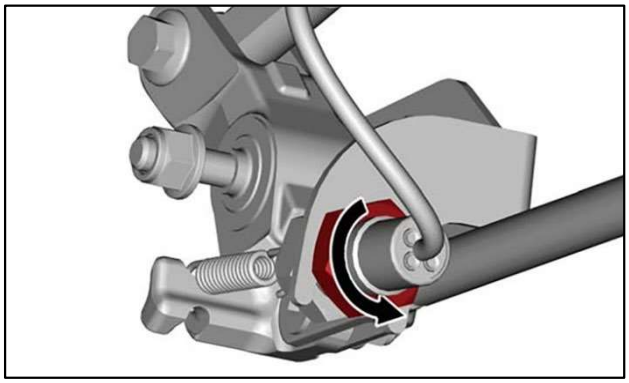

5. Hand tighten the rear jam nut to ensure the forward jam nut does not turn.

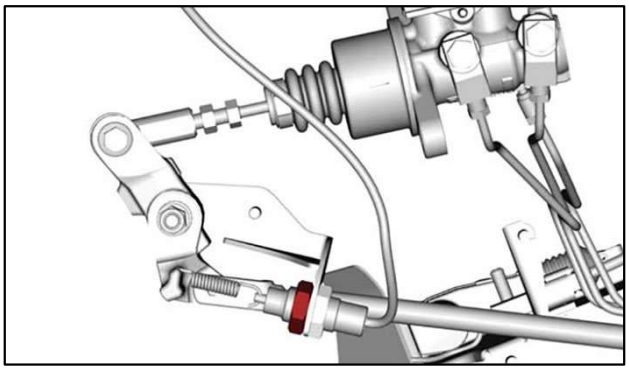

6. Tighten the forward and rear jam nuts to specification.

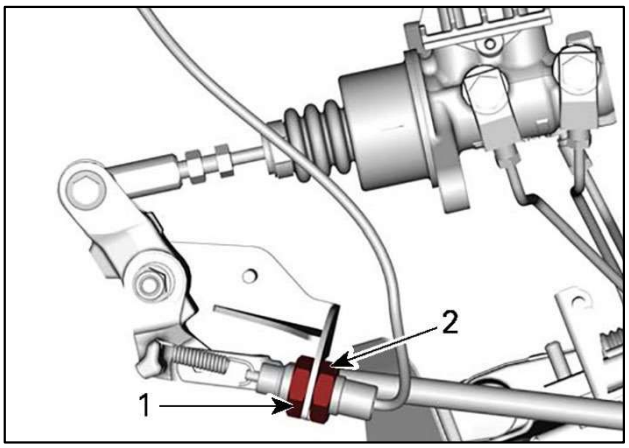

1. Rear jam nut
2. Forward jam nut

TIGHTENING TORQUE	
BLS jam nuts	15 N•m ± 2 N•m (133 ± 18 lbf•**in**)

MY22 & MY23 Ryker

1 Connect the vehicle to the BRP diagnostic software (BUDS2) and go to:
- **Measurements** page
- **VCM** Basic tab

2 Untighten the upper and lower jam nuts of the BLS.

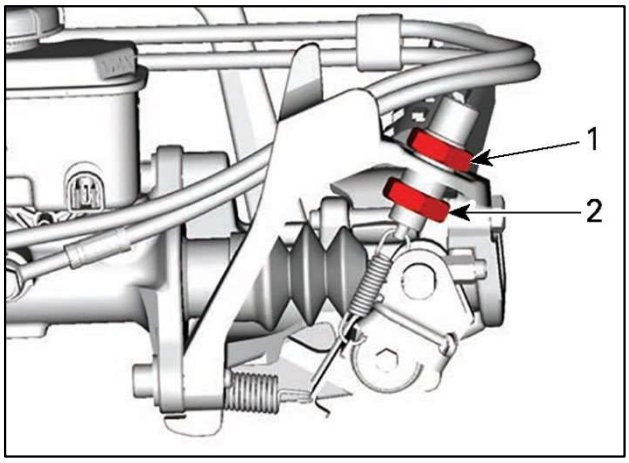

1. Upper jam nut
2. Lower jam nut

3. Hand tighten the upper jam nut until the brake lights turn on and validate that BUDS2 displays true for the BLS.

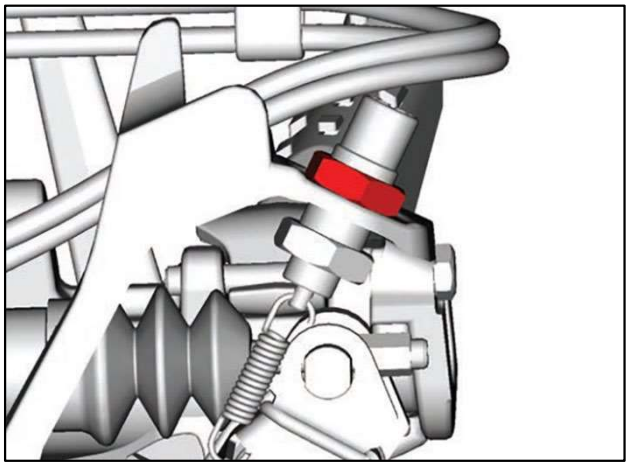

4. Carefully untighten the upper jam nut by **1.0** turn.

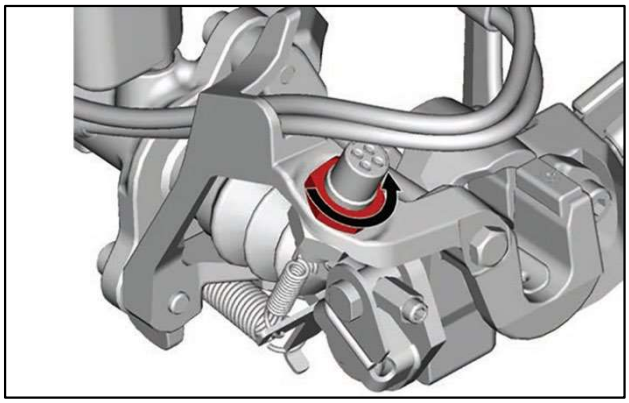

5. Hand tighten the lower jam nut to ensure the upper jam nut does not turn.

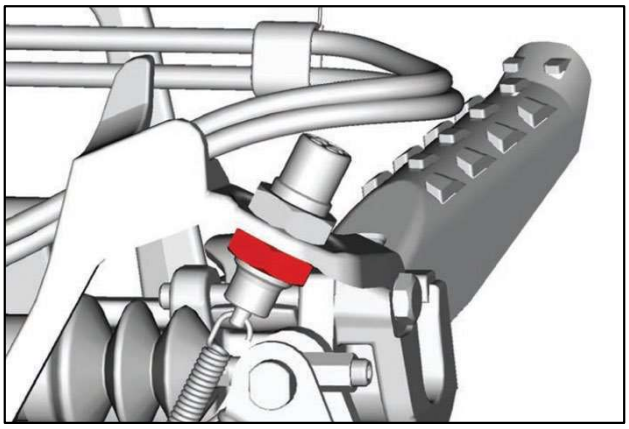

6. Tighten the upper and lower jam nuts to specification.

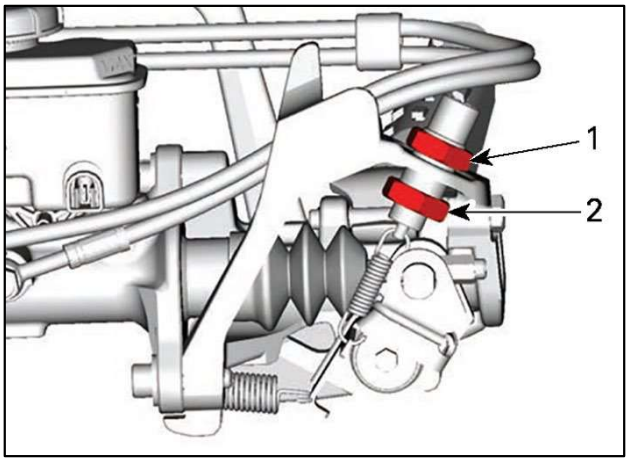

1. Upper jam nut
2. Lower jam nut

TIGHTENING TORQUE	
BLS jam nuts	15 N•m ± 2 N•m (133 ± 18 lbf•**in**)

ADDING SPRING ON BLS

MY22 & MY23 Ryker

1. Adjust foot peg to the rearmost position.

All Models

2. Insert spring with its straight side along the wires to insert the first coil.
3. Rotate spring around the wires to insert all wires inside the coils.

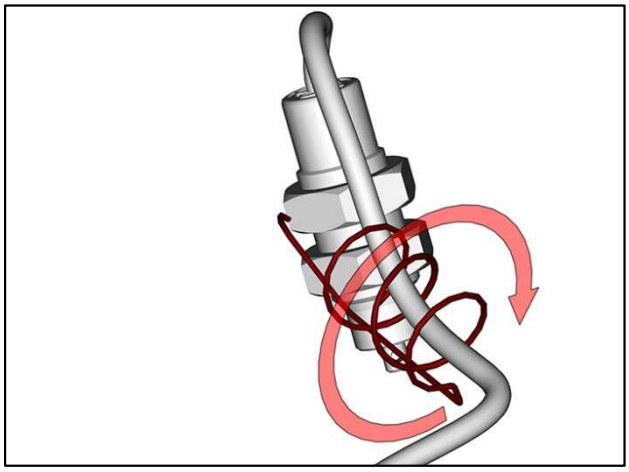

NOTICE Make sure all coils are not entangled through the wires.

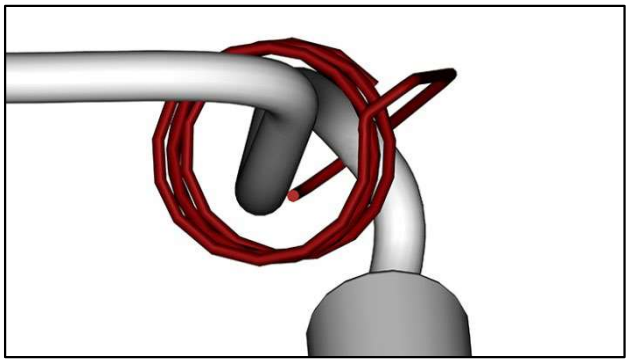

4. Pull the spring hook and attach to the brake pedal spring hook.

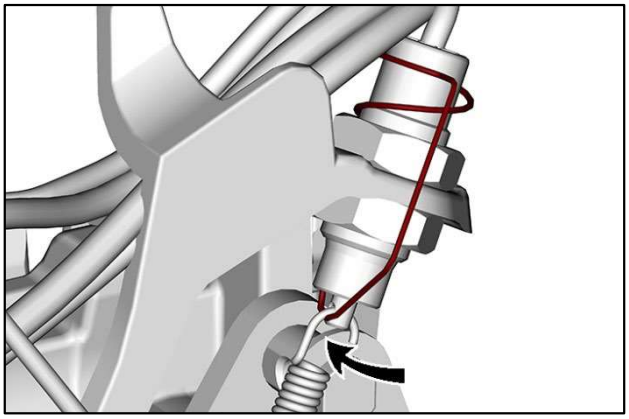

RYKER

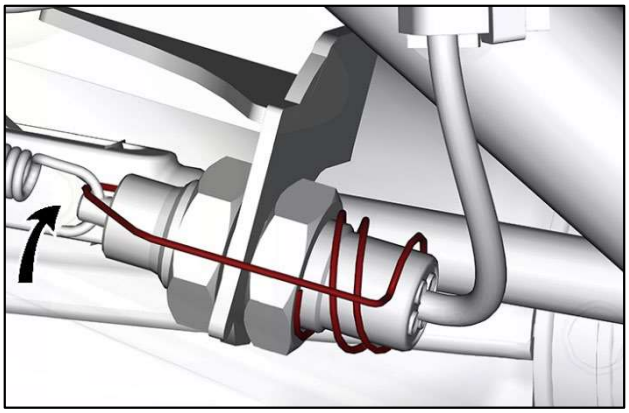

RT

5. Apply brakes to validate proper operation of the spring.

NOTICE Ensure chafing on the wires does not occur when the spring is actuated.

6. Verify brake lights are actuated when the brake pedal is pressed and do not stay illuminated when the brake pedal is released.

MY22 & MY23 Ryker

7. Readjust foot peg to its original position.

WARRANTY

Submit a warranty claim using the following information.

For claiming procedure, refer to the **online** *DEALER/DISTRIBUTOR WARRANTY GUIDE*.

With BOSSWeb

MY2020 Models

Product Line	Roadster
Unit Model Year	2020
Campaign/Bulletin/ Description	12 / 2023-6 / BRAKE LIGHTS MAY STAY ILLUMINAT
*Action Inspect ☐ Repair ☑	
Total Labor time paid	1.3 hour

MY2021 Models

Product Line	Roadster
Unit Model Year	2021
Campaign/Bulletin/ Description	8 / 2023-6 / BRAKE LIGHTS MAY STAY ILLUMINAT
*Action Inspect ☐ Repair ☑	
Total Labor time paid	1.3 hour

MY2022 Models

Product Line	Roadster
Unit Model Year	2022
Campaign/Bulletin/ Description	21 / 2023-6 / BRAKE LIGHTS MAY STAY ILLUMINAT
*Action Inspect ☐ Repair ☑	
Total Labor time paid	0.3 hour

MY2023 Models

Product Line	Roadster
Unit Model Year	2023
Campaign/Bulletin/ Description	8 / 2023-6 / BRAKE LIGHTS MAY STAY ILLUMINAT
*Action Inspect ☐ Repair ☑	
Total Labor time paid	0.3 hour

With Warranty On Demand

MY2020 Models

CLAIM DETAILS	
Claim Type	Unit Campaign
Serial Number	Enter Serial Number
Warranty Campaign	Select *3WV-2020-0012 / BRAKE LIGHTS MAY STAY ILLUMINATED* from the drop-down list
Causal Part	710008326
Date of Repair	Repair date
Total Labor Time Paid	1.3 hour

MY2021 Models

CLAIM DETAILS	
Claim Type	Unit Campaign
Serial Number	Enter Serial Number
Warranty Campaign	Select *3WV-2021-0008 / BRAKE LIGHTS MAY STAY ILLUMINATED* from the drop-down list
Causal Part	710008326
Date of Repair	Repair date
Total Labor Time Paid	1.3 hour

MY2022 Models

CLAIM DETAILS	
Claim Type	Unit Campaign
Serial Number	Enter Serial Number
Warranty Campaign	Select *3WV-2022-0021 / BRAKE LIGHTS MAY STAY ILLUMINATED* from the drop-down list
Causal Part	710008326
Date of Repair	Repair date
Total Labor Time Paid	0.3 hour

MY2023 Models

CLAIM DETAILS	
Claim Type	Unit Campaign
Serial Number	Enter Serial Number
Warranty Campaign	Select *3WV-2023-0008 / BRAKE LIGHTS MAY STAY ILLUMINATED* from the drop-down list
Causal Part	710008326
Date of Repair	Repair date
Total Labor Time Paid	0.3 hour