SAFETY RECALL
NORTH AMERICA
Park Engagement

Reference: 61A / NHTSA 23V-301

FCA US LLC

Remedy available for

2019-2021 (VF) Ram ProMaster

Template Version 1.0

Revision	Edition	Detail
7	September 2026	Updates shown in red.

NOTE: LOPs 2161A181 and 2161A182 are for Remanufactured Transmissions ONLY.

SYMPTOM DESCRIPTION

The transmission on about 24,250 of the above vehicles may not allow the park pawl to fully engage the park gear due to debris interference. A partially engaged park pawl may lead to a vehicle roll away increasing the likelihood of a vehicle crash without prior warning and/or injury to those in or around the vehicle.

SCOPE

This recall applies only to the above vehicles equipped with the 62TE transmission.

NOTE: Some vehicles above may have been identified as not involved in this recall and therefore have been excluded from this recall.

IMPORTANT: Some of the involved vehicles may be in dealer new vehicle inventory. Federal law requires you to complete this recall service on these vehicles before retail delivery. Dealers should also consider this requirement to apply to used vehicle inventory and should perform this recall on vehicles in for service. Involved vehicles can be determined by using the VIP inquiry process.

REPAIR TO BE PERFORMED

Update the Powertrain Control Module (PCM) calibration software, and replace components within the transmission, or inspect, and if necessary, replace the transmission.

ALTERNATE TRANSPORTATION

Dealers should attempt to minimize customer inconvenience by placing the owner in a loaner vehicle if the vehicle must be held overnight

COMPLETION REPORTING / REIMBURSEMENT

Claims for vehicles that have been serviced must be submitted on the DealerCONNECT Claim Entry Screen located on the Service tab. Claims paid will be used by FCA to record recall service completions and provide dealer payments.

Use the following labor operation numbers and time allowances:

NOTE: This repair requires the PCM software to be at the latest level and the transmission compounder to be replaced to complete the recall. The only exception is if a remanufactured transmission was previously installed.

Labor Description	Number	Hrs
Inspect PCM software at latest level **Remanufactured Transmission ONLY**	21-61-A1-81	0.2
Inspect/Update PCM Software **Remanufactured Transmission ONLY**	21-61-A1-82	0.3
Inspect/Update PCM Software and Replace Transmission Compounder	21-61-A1-83	3.7
Inspect/Update PCM Software and Replace Transmission	21-61-A1-84	3.4

Optional Equipment

Labor Description	Number	Hrs
Belly Pan / Skid Plate	21-61-A1-60	0.2

Related Operations – Transmission Replacement

Labor Description	Number	Hrs
Transaxle Oil Cooler Hoses	21-61-A1-50	0.6
Transaxle External Auxiliary Oil Cooler	21-61-A1-51	0.7
Follow the additional steps outlined in Service Bulletin 21-033-23 and Warranty Bulletin D-23-24 (Rev. A) for Advanced Transmission Pull Process Steps	21-61-A1-52	3.4

Strictly respect STELLANTIS Group safety, cleanliness, and environmental instructions for any vehicle service.
Document exclusively reserved for dealer information. Internal distribution to be ensured by dealer.
Reproduction forbidden without the written agreement of STELLANTIS Group. (C) 2024 STELLANTIS Group. All Rights Reserved (tdb)

Labor Description	Number	Allowance
Floor Plan Reimbursement	95-95-95-97	Calculate See Below

Floor Plan Reimbursement represents the vehicle's average daily allowance (see table below) multiplied by the number of days the vehicle was in dealer inventory and not available for sale. This reimbursement is limited to the number of days from the date of the stop sale to the date that the remedy was made available. Note: If the vehicle was received by your dealership (KZX date) AFTER the stop sale date, you will use the KZX date instead of the stop sale date. For this Recall, the stop sale was initiated on 05/18/2023 and the remedy was made available on 09/21/2023, therefore, the number of days cannot exceed 126 days.

Vehicle	Average Daily Allowance
2019-2020 (VF) Ram ProMaster	[redacted]

Add the cost of the recall parts plus applicable dealer allowance to your claim.

In addition, enter "MATL" in the Part Number section of your claim with the applicable Material Allowance where appropriate.

NOTE: See the Warranty Administration Manual, Recall Claim Processing Section, for complete recall claim processing instructions.

PARTS INFORMATION

NOTE: If transmission was previously replaced with a remanufactured transmission Serial Number M3164017 or later, the following parts are NOT required.

Part No.	Qty.	Part Name
CSPM44A1AA		Compounder Campaign Kit
	1	Snap Ring
	1	Bearing
	1	Snap Ring
	1	L/R Clutch (Retainer)
	1	Hex (Nut)

Part No.	Qty.	Part Name
68218057AC	As Req.	TRANSMISSION FLUID ATF+4 MS-9602
05010884AD	1	RTV Tube (3OZ) MS-GF41

PARTS RETURN

If the compounder is replaced, render the recalled compounder unusable and discard.

If the transmission is replaced, return the transmission via Critical Core Return Process: Dealer Connect > Parts > Returns > Critical Core Return Program. Dealers will be reimbursed for the core once received by Supplier. Also refer to SB 21-033-23, Warranty bulletin D-23-24 (Rev. A) and STAR Online - S2321000011 for additional information on transmission advance pull process.

Strictly respect STELLANTIS Group safety, cleanliness, and environmental instructions for any vehicle service.
Document exclusively reserved for dealer information. Internal distribution to be ensured by dealer.
Reproduction forbidden without the written agreement of STELLANTIS Group. (C) 2024 STELLANTIS Group. All Rights Reserved (tdb)

SPECIAL TOOLS

These tools are required for every vehicle

Number	Description
NPN	wiTECH MicroPod II / MDP
NPN	Laptop Computer
NPN	wiTECH Software

These tools are only required for compounder replacement

Number	Description
9721	Staking Tool
9739	Holder
NPN	50mm socket
L-4407A	Gear Puller
6055	Thrust Button
9908	Puller Adapter
C-3752	Slide Hammers
9336A	Dipstick

DEALER NOTIFICATION

To view this notification on DealerCONNECT, select "Global Recall System" on the Service tab, then click on the description of this notification.

OWNER NOTIFICATION / SERVICE SCHEDULING

All involved vehicle owners known to FCA are being notified of the service requirement by first class mail. They are requested to schedule appointments for this service with their dealers. A generic copy of the owner letter is attached.

VEHICLE LISTS, GLOBAL RECALL SYSTEM, VIP AND DEALER FOLLOW UP

All involved vehicles have been entered into the DealerCONNECT Global Recall System (GRS) and Vehicle Information Plus (VIP) for dealer inquiry as needed.

GRS provides involved dealers with an updated VIN list of their incomplete vehicles. The owner's name, address and phone number are listed if known. Completed vehicles are removed from GRS within several days of repair claim submission.

To use this system, click on the "**Service**" tab and then click on "**Global Recall System**." Your dealer's VIN list for each recall displayed can be sorted by: those vehicles that were unsold at recall launch, those with a phone number, city, zip code, or VIN sequence.

Dealers must perform this repair on all unsold vehicles before retail delivery. Dealers should also use the VIN list to follow up with all owners to schedule appointments for this repair.

Recall VIN lists may contain confidential, restricted owner name and address information that was obtained from the Department of Motor Vehicles of various states. Use of this information is permitted for this recall only and is strictly prohibited from all other use.

ADDITIONAL INFORMATION

If you have any questions or need assistance in completing this action, please contact your Service and Parts District Manager.

Customer Services / Field Operations
FCA US LLC.

Strictly respect STELLANTIS Group safety, cleanliness, and environmental instructions for any vehicle service.
Document exclusively reserved for dealer information. Internal distribution to be ensured by dealer.
Reproduction forbidden without the written agreement of STELLANTIS Group. (C) 2024 STELLANTIS Group. All Rights Reserved (tdb)

Service Procedure

A. Inspection

1. Does transmission reverse gear function normally, no erratic or unusual behaviour in reverse?
   - **Functions Normally:** Skip the following inspection steps and proceed directly to **Section B. Flash PCM.**
   - **No Reverse or Unusual/Erratic Behaviour in Reverse:** Continue with following inspection procedure.

   NOTE: The wiTECH scan tool must be used to perform this recall. The wiTECH software is required to be at the latest release level before performing this procedure.

2. Open the hood and install a battery charger. Verify that the charging rate provides 13.0 to 13.5 volts. Do not allow the charger to time out during the flash process. Set the battery charger timer (if so equipped) to continuous charge.

   NOTE: Use an accurate stand-alone voltmeter. The battery charger volt meter may not be sufficiently accurate. Voltages outside of the specified range will cause an unsuccessful flash. If voltage reading is too high, apply an electrical load by activating the park or headlamps and/or HVAC blower motor to lower the voltage.

3. Connect the wiTECH micro pod II to the vehicle data link connector.

4. Place the ignition in the "**RUN**" position.

5. Open the wiTECH 2.0 website.

6. Enter your "**User id**" and "**Password**" and your "**Dealer Code**", then select "**Sign In**" at the bottom of the screen. Click "**Accept**".

7. From the "**Vehicle Selection**" screen, select the appropriate vehicle.

   NOTE: If this wiTECH message pop-up message appeared, it may be ignored (Figure 1).

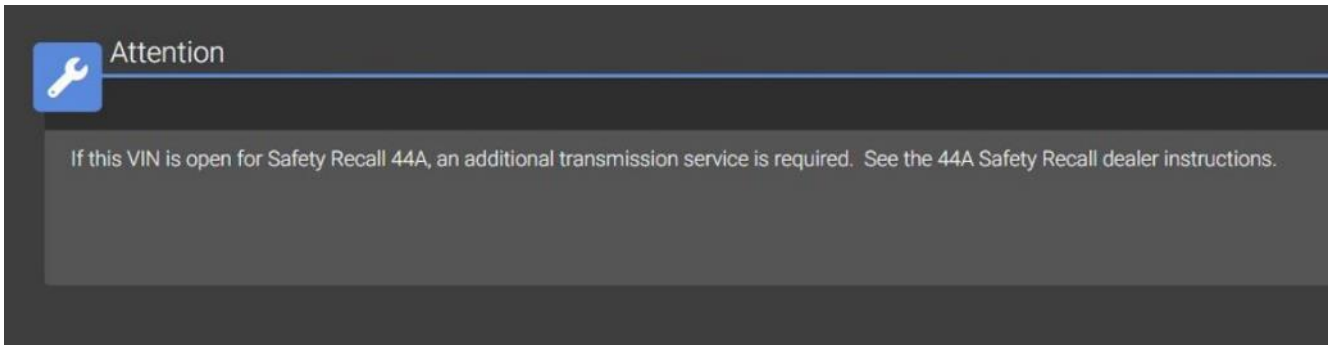

Figure 1 – wiTECH Popup Message

Strictly respect STELLANTIS Group safety, cleanliness, and environmental instructions for any vehicle service.
Document exclusively reserved for dealer information. Internal distribution to be ensured by dealer.
Reproduction forbidden without the written agreement of STELLANTIS Group. (C) 2024 STELLANTIS Group. All Rights Reserved (tdb)

8. Create a Vehicle Scan Report (VSR).

9. Select "**View DTCs**" then note if either of the following Diagnostic Trouble Codes (DTC)s appear:
    - P0792 - COMPOUNDER SPEED RATIO ERROR
    - P0736 - GEAR RATIO ERROR IN REVERSE

    ➢ If either of the above DTCs appeared along with a No Reverse Condition duplicated / confirmed; replacement of the Transmission, Transmission Cooler, Cooler Lines and Fluid will be needed. Refer to SB 21-033-23, Warranty bulletin D-23-24 (Rev. A) and STAR Online - S2321000011 for additional information on transmission advance pull process.

    Order the appropriate transmission and related components based on the **vehicle build date**:

    Vehicle Built On or Before 02/28/2019:

Part No.	Qty.	Part Name
CSPM44A3AA	1	Transmission with Torque Converter
CSPM44A2AA	1	Cooler and Cooler Lines Kit
68218057AC	As Req.	TRANSMISSION FLUID ATF+4 MS-9602

    Vehicle Built On or After 03/01/2019:

Part No.	Qty.	Part Name
CSPM44A4AA	1	Transmission with Torque Converter
CSPM44A2AA	1	Cooler and Cooler Lines Kit
68218057AC	As Req.	TRANSMISSION FLUID ATF+4 MS-9602

    ➢ If either of the above DTCs did **NOT** appear and vehicle does not have reverse gear or exhibits erratic or unusual behaviour in reverse, then vehicle has a fault not related to this recall which needs to be addressed before proceeding.

10. Place the ignition in the "**OFF**" position and then remove the wiTECH micro pod II device from the vehicle.

11. Remove the battery charger from the vehicle.

Strictly respect STELLANTIS Group safety, cleanliness, and environmental instructions for any vehicle service.
Document exclusively reserved for dealer information. Internal distribution to be ensured by dealer.
Reproduction forbidden without the written agreement of STELLANTIS Group. (C) 2024 STELLANTIS Group. All Rights Reserved (tdb)

B. Flash PCM

NOTE: The wiTECH scan tool must be used to perform this recall. The wiTECH software is required to be at the latest release level before performing this procedure. If the reprogramming flash for the PCM is aborted or interrupted, repeat the procedure. The PCM software must be at the latest software calibration level after completing this recall.

1. Open the hood and install a battery charger. Verify that the charging rate provides 13.0 to 13.5 volts. Do not allow the charger to time out during the flash process. Set the battery charger timer (if so equipped) to continuous charge.

   NOTE: Use an accurate stand-alone voltmeter. The battery charger volt meter may not be sufficiently accurate. Voltages outside of the specified range will cause an unsuccessful flash. If voltage reading is too high, apply an electrical load by activating the park or headlamps and/or HVAC blower motor to lower the voltage.

2. Connect the wiTECH micro pod II to the vehicle data link connector.

3. Place the ignition in the "**RUN**" position.

4. Open the wiTECH 2.0 website.

5. Enter your "**User id**" and "**Password**" and your "**Dealer Code**", then select "**Sign In**" at the bottom of the screen. Click "**Accept**".

6. From the "**Vehicle Selection**" screen, select the vehicle to be updated.

   NOTE: If this wiTECH message pop-up message appeared, it may be ignored (Figure 1).

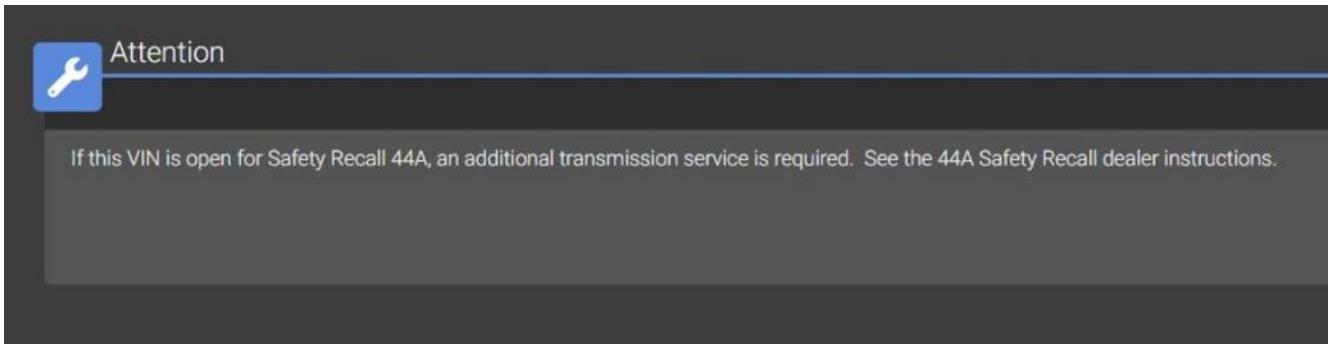

Figure 1 – wiTECH Popup Message

7. From the "**Action Items**" screen, select the "**All Flashes**" tab.
   - Select "**PCM**" by clicking the arrow on the right side of the screen. Read the special flash instructions, then select "**OK**". Continue with **Step 8**.
   - If "**PCM**" is not displayed as one of the available flashes, the PCM software is already at the current software level and does not require updating. Proceed to **Step 12**.

Strictly respect STELLANTIS Group safety, cleanliness, and environmental instructions for any vehicle service.
Document exclusively reserved for dealer information. Internal distribution to be ensured by dealer.
Reproduction forbidden without the written agreement of STELLANTIS Group. (C) 2024 STELLANTIS Group. All Rights Reserved (tdb)

8. From the "**Flash ECU Agreement**" page, agree to terms by "**Checking the Box**".
9. Select "**Flash ECU**" and then follow the wiTECH screen instructions to complete the flash.
10. Once the software is confirmed to be at the latest available calibration level, select "**View DTCs**".
11. Select the "**Clear All DTCs**" tab, then click "**Clear All DTCs**" and then select "**Close**". It may be necessary to cycle the ignition OFF to RUN to clear the codes.
12. Place the ignition in the "**OFF**" position and then remove the wiTECH micro pod II device from the vehicle.
13. Remove the battery charger from the vehicle.
14. Proceed to **Section C.** Inspect for Remanufactured Transmission.

Strictly respect STELLANTIS Group safety, cleanliness, and environmental instructions for any vehicle service.
Document exclusively reserved for dealer information. Internal distribution to be ensured by dealer.
Reproduction forbidden without the written agreement of STELLANTIS Group. (C) 2024 STELLANTIS Group. All Rights Reserved (tdb)

C. Inspect for Remanufactured Transmission

1. Inspect the transmission for a sticker indicating that it has been remanufactured (Figure 2).
   - **YES:** There is a sticker. Continue to the next step to read the Serial Number.
   - **YES – but sticker not readable:** Proceed to Section D. Compounder Replacement.
   - **NO:** Sticker not found. Proceed to Section D. Compounder Replacement.

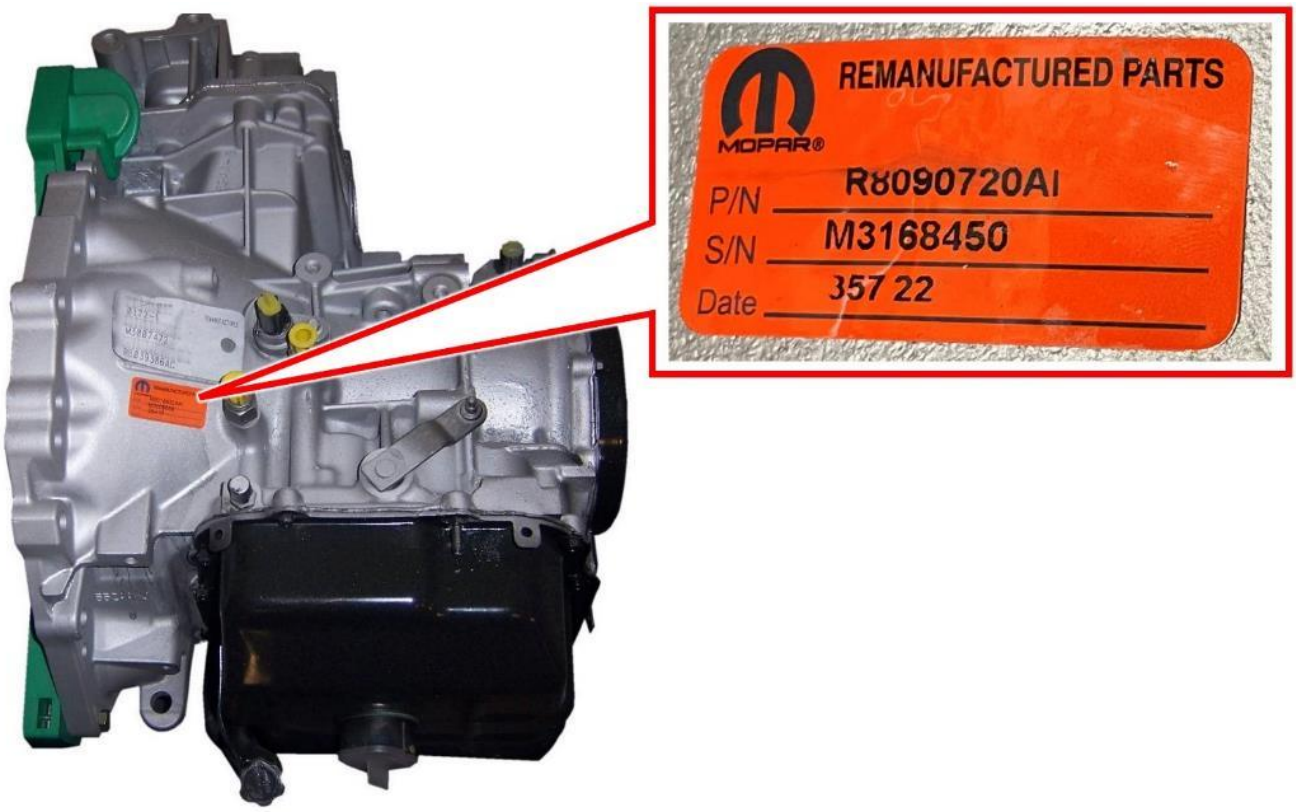

Figure 2 – Remanufactured Transmission – Inspect Serial Number

2. If a remanufactured sticker was located on the transmission, read the sticker Serial Number (Figure 2).
   - **S/N M3164017 or above:** Close the vehicle hood and mark this campaign as completed. Return the vehicle to the customer.
   - **S/N M3164016 or below:** Proceed to Section D. Compounder Replacement.

Strictly respect STELLANTIS Group safety, cleanliness, and environmental instructions for any vehicle service.
Document exclusively reserved for dealer information. Internal distribution to be ensured by dealer.
Reproduction forbidden without the written agreement of STELLANTIS Group. (C) 2024 STELLANTIS Group. All Rights Reserved (tdb)

D. Compounder Replacement

1. Position vehicle on suitable lift.

   NOTE: It may be necessary to use a battery terminal puller if the battery cable terminal clamps are seized on to the battery posts.

2. Turn the ignition switch to the Off position. Be certain that all electrical accessories are turned off (Figure 3).

3. Remove the battery cover (1) by loosening fasteners (2, 3) (Figure 3).

4. Loosen the battery negative cable terminal clamp (1) and remove the negative cable from the terminal (Figure 4).

5. Rotate the ignition key to unlock the steering column.

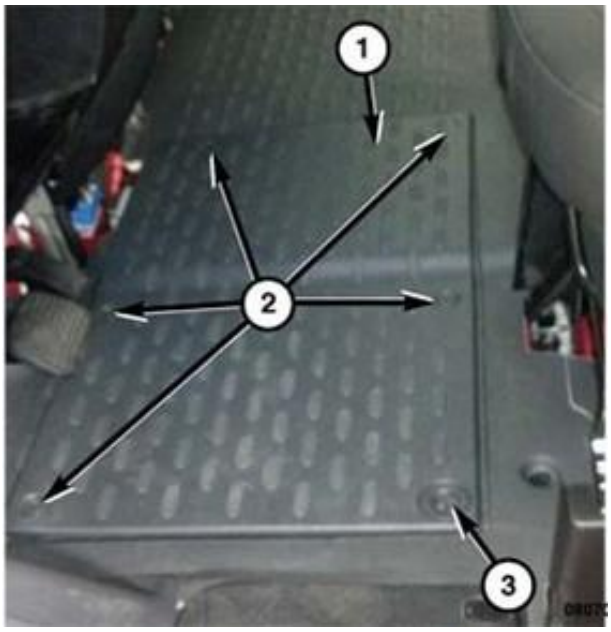

Figure 3 – Battery Cover

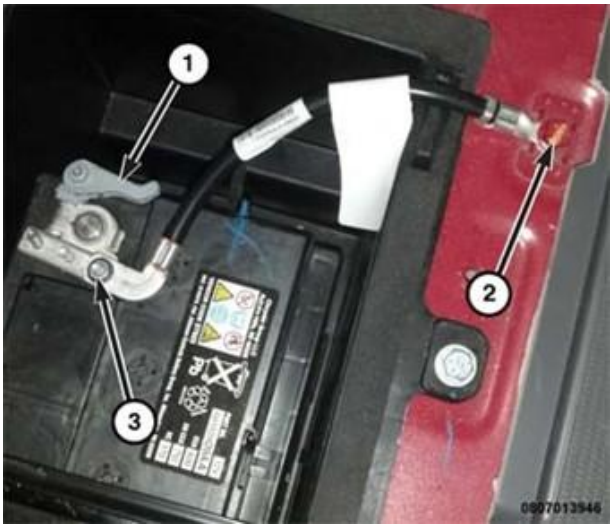

Figure 4 – Battery

Strictly respect STELLANTIS Group safety, cleanliness, and environmental instructions for any vehicle service.
Document exclusively reserved for dealer information. Internal distribution to be ensured by dealer.
Reproduction forbidden without the written agreement of STELLANTIS Group. (C) 2024 STELLANTIS Group. All Rights Reserved (tdb)

6. Remove the dipstick tube cap (1) (Figure 5).

7. **Prefered method**: Using a suction tool, evacuate the transmission fluid through the dipstick tube.

   NOTE: If a suction tool is not available, place a drain pan under the transmission then remove the transmission oil pan to drain the transmission fluid.

8. Raise and support the vehicle.

9. Remove the left front wheel assembly.

10. Turn steering wheel fully to left for improved access during the remainder of the procedure.

11. Remove the fasteners (3) and (2) securing the left front wheelhouse splash shield (Figure 6).

12. Remove the left front wheelhouse splash shield (1) (Figure 6).

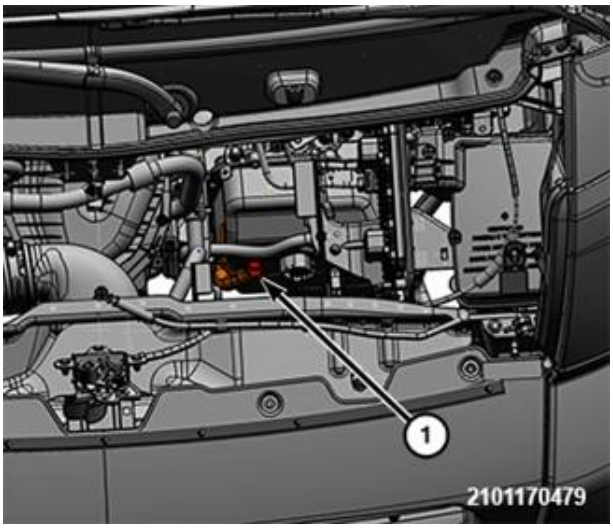

Figure 5 – Dipstick Tube Cap

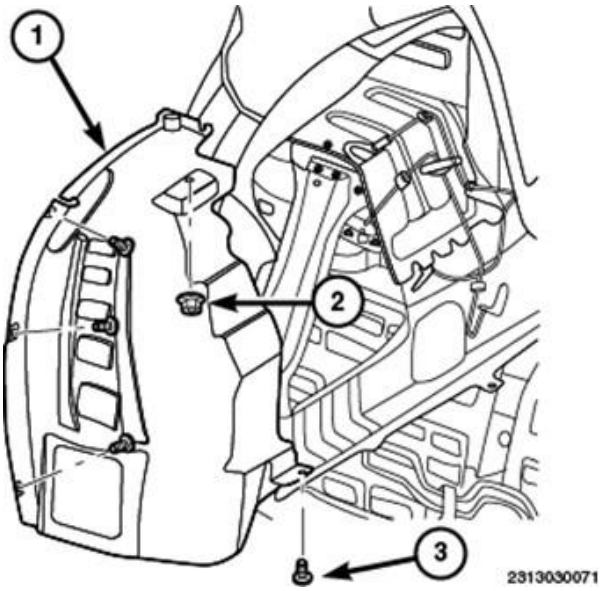

Figure 6 – Wheelhouse Splash Shield

Strictly respect STELLANTIS Group safety, cleanliness, and environmental instructions for any vehicle service.
Document exclusively reserved for dealer information. Internal distribution to be ensured by dealer.
Reproduction forbidden without the written agreement of STELLANTIS Group. (C) 2024 STELLANTIS Group. All Rights Reserved (tdb)

13. If equipped, remove belly pan (Figure 7).

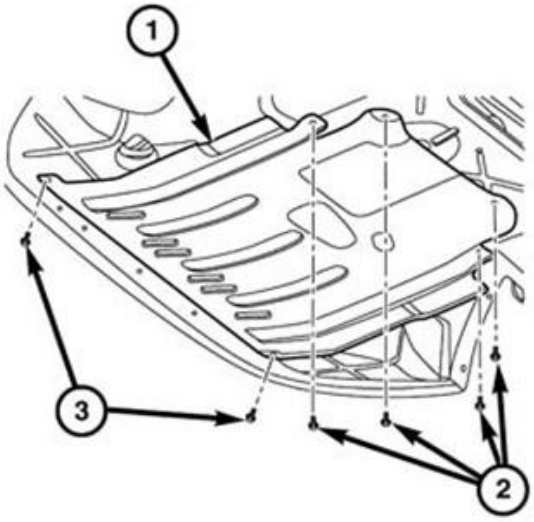

Figure 7 – Belly Pan

14. Release transmission cooler tubes (2) from the two plastic retainers (1) then remove the nuts (3) securing the two cooler tube brackets (4) to the transmission. Remove the retainers with brackets from the transmission (Figure 8). Do **NOT** disconnect the transmission cooler tubes from the transmission or oil cooler.

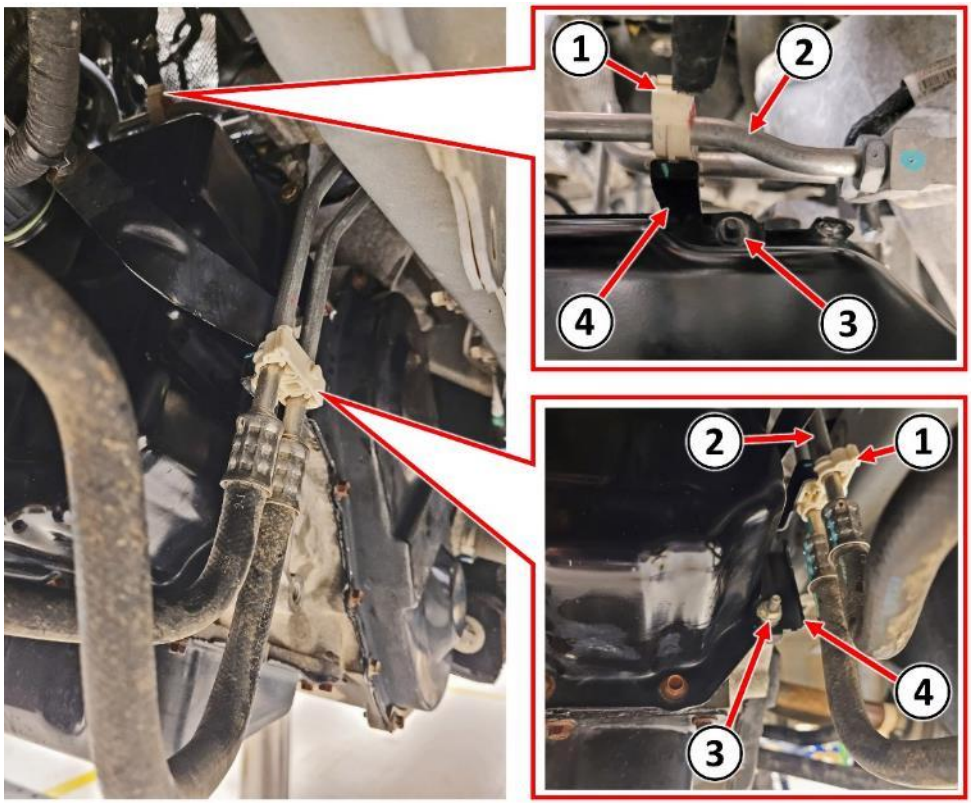

Figure 8 – Cooler Tube Retainers

Strictly respect STELLANTIS Group safety, cleanliness, and environmental instructions for any vehicle service.
Document exclusively reserved for dealer information. Internal distribution to be ensured by dealer.
Reproduction forbidden without the written agreement of STELLANTIS Group. (C) 2024 STELLANTIS Group. All Rights Reserved (tdb)

15. Disconnect the solenoid pack electrical connector (1) at valve body oil pan (Figure 9).

16. Remove the bolt (2) securing the wire harness bracket (4) to the transmission then position the wire harness (3) and bracket (4) aside (Figure 9).

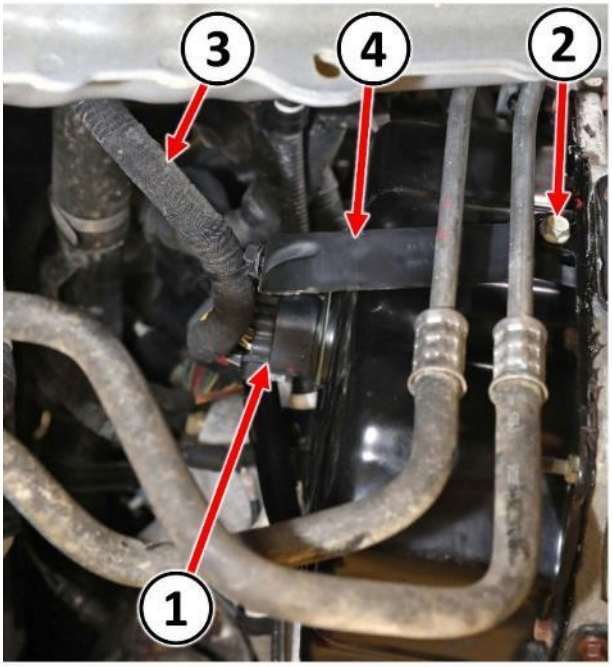

Figure 9 – Electrical Connector

17. Release the retainer (1) securing the wire harness (2) to the valve body oil pan (3) (Figure 10).

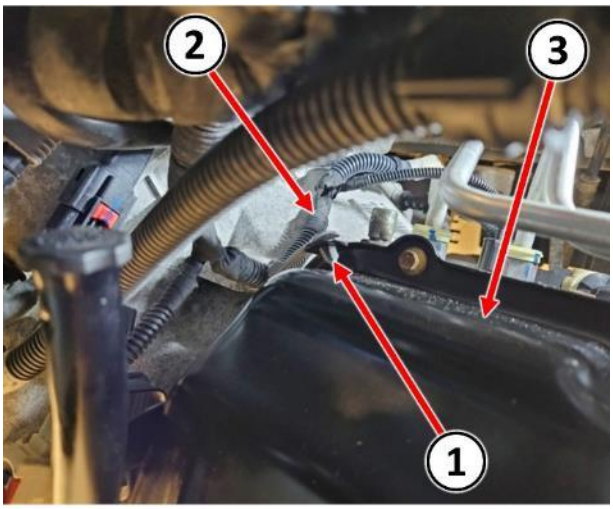

Figure 10 – Wire Harness Retainer

Strictly respect STELLANTIS Group safety, cleanliness, and environmental instructions for any vehicle service.
Document exclusively reserved for dealer information. Internal distribution to be ensured by dealer.
Reproduction forbidden without the written agreement of STELLANTIS Group. (C) 2024 STELLANTIS Group. All Rights Reserved (tdb)

18. If equipped, remove the fasteners (1) and the front sound dampener cover (2) (Figure 11).

19. Place a suitable drain pan under the transmission.

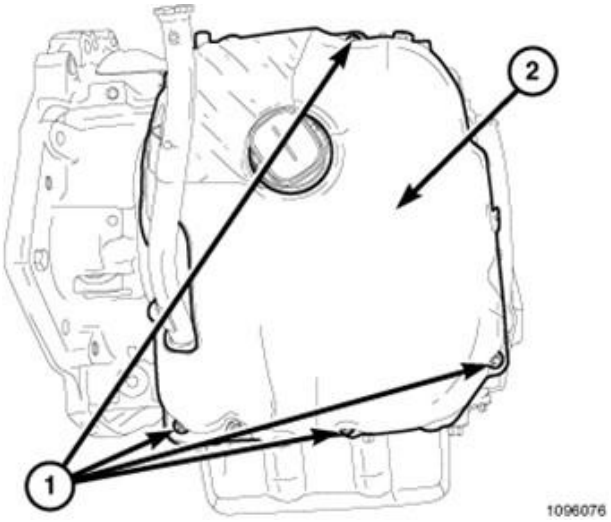

Figure 11 – Sound Dampener Cover

NOTE: For reassembly, mark the stud locations on valve body oil pan prior to fasterner removal.

20. Remove the fasteners (2) securing the valve body oil pan (1) (Figure 12).

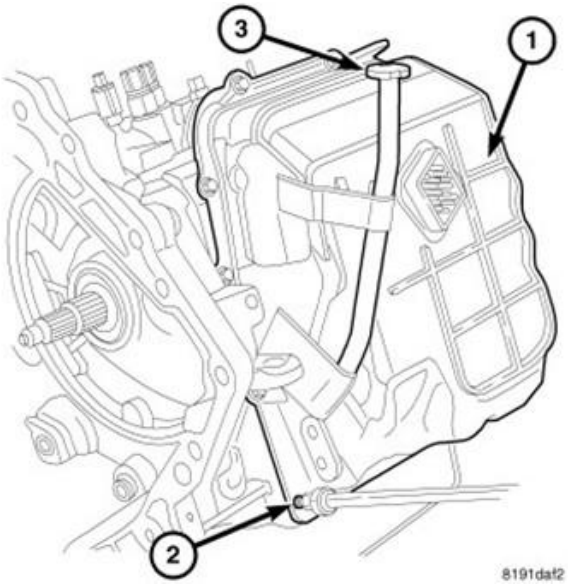

Figure 12 – Valve Body Oil Pan

Strictly respect STELLANTIS Group safety, cleanliness, and environmental instructions for any vehicle service.
Document exclusively reserved for dealer information. Internal distribution to be ensured by dealer.
Reproduction forbidden without the written agreement of STELLANTIS Group. (C) 2024 STELLANTIS Group. All Rights Reserved (tdb)

21. Disconnect the electrical connector (1) from the range sensor (2) (Figure 13).

22. Remove the T25 bolt (3) holding the detent spring (4) (Figure 13).

23. Remove the detent spring (4) (Figure 13).

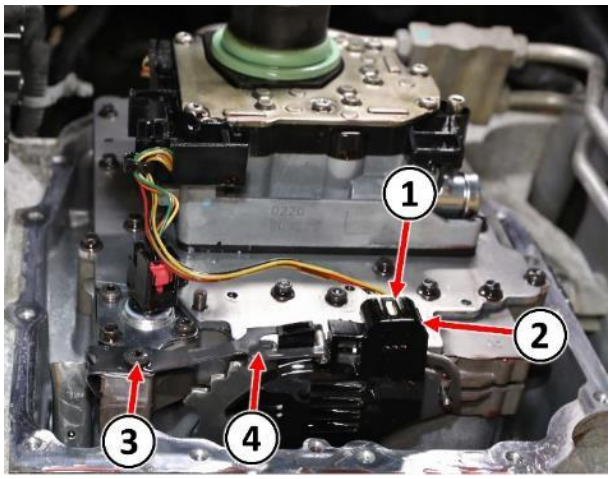

Figure 13 – Range Sensor Connector and Detent Spring

24. Remove valve body bolts (Figure 14).

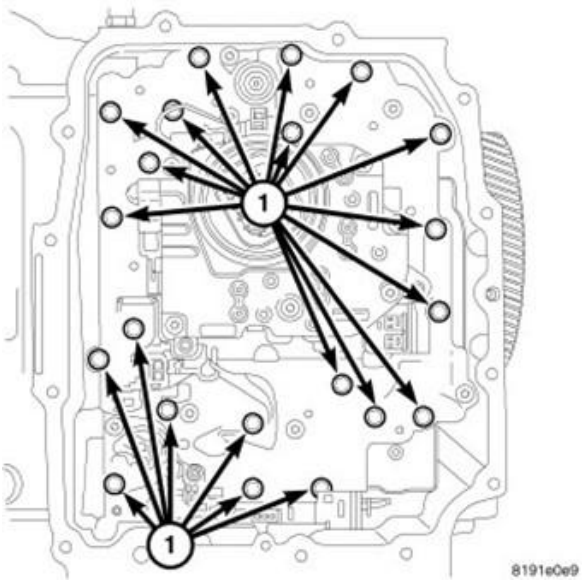

Figure 14 – Valve Body

Strictly respect STELLANTIS Group safety, cleanliness, and environmental instructions for any vehicle service.
Document exclusively reserved for dealer information. Internal distribution to be ensured by dealer.
Reproduction forbidden without the written agreement of STELLANTIS Group. (C) 2024 STELLANTIS Group. All Rights Reserved (tdb)

NOTE: It may be necessary to use needle nose pliers or similar tool to push the oil transfer tubes (2) toward the transmission releasing them from the valve body (1) during valve body removal (Figure 15).

NOTE: For reassembly, pay attention to alignment of manual valve pin (3) in the range selector rooster comb (Figure 15).

25. Carefully remove the valve body (1) being careful to not damage the valve body gasket on the back side of the valve body (Figure 15).

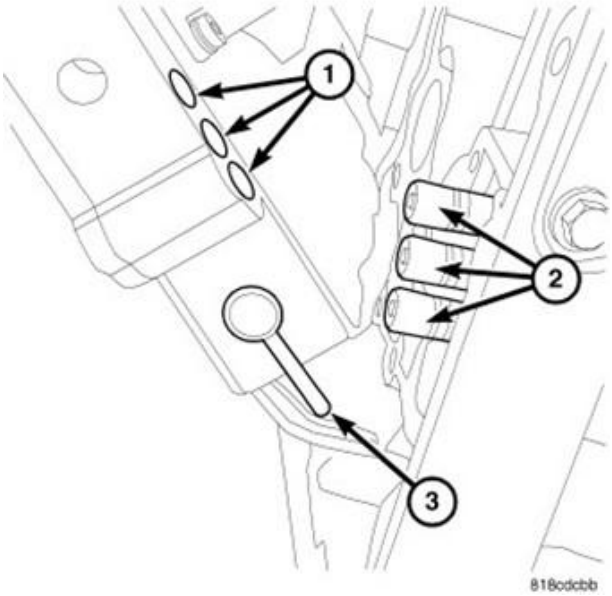

Figure 15 – Valve Body

26. Remove the oil transfer tubes (2) being careful to not damage the tube O-rings (1). Do not separate the oil transfer tubes from their retainers (3) (Figure 16).

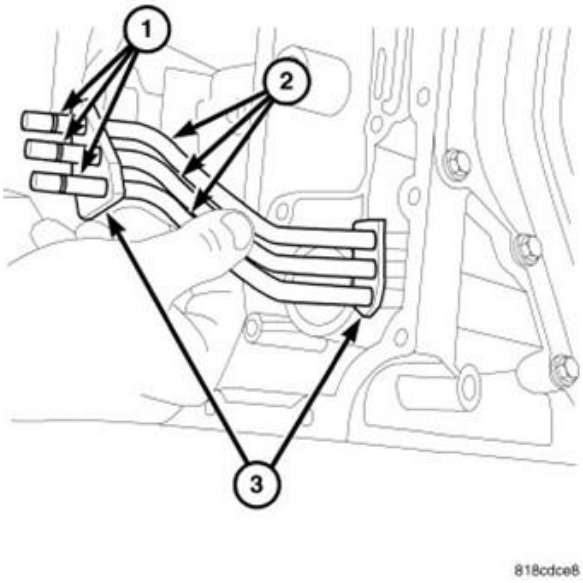

Figure 16 – Oil Transfer Tubes

Strictly respect STELLANTIS Group safety, cleanliness, and environmental instructions for any vehicle service.
Document exclusively reserved for dealer information. Internal distribution to be ensured by dealer.
Reproduction forbidden without the written agreement of STELLANTIS Group. (C) 2024 STELLANTIS Group. All Rights Reserved (tdb)

27. If the vehicle is equipped with rear air conditioning, remove the screws (2) securing the refrigerant hoses (1) to the frame rail. Then position the hoses (1) aside for transfer gear cover access (Figure 17).

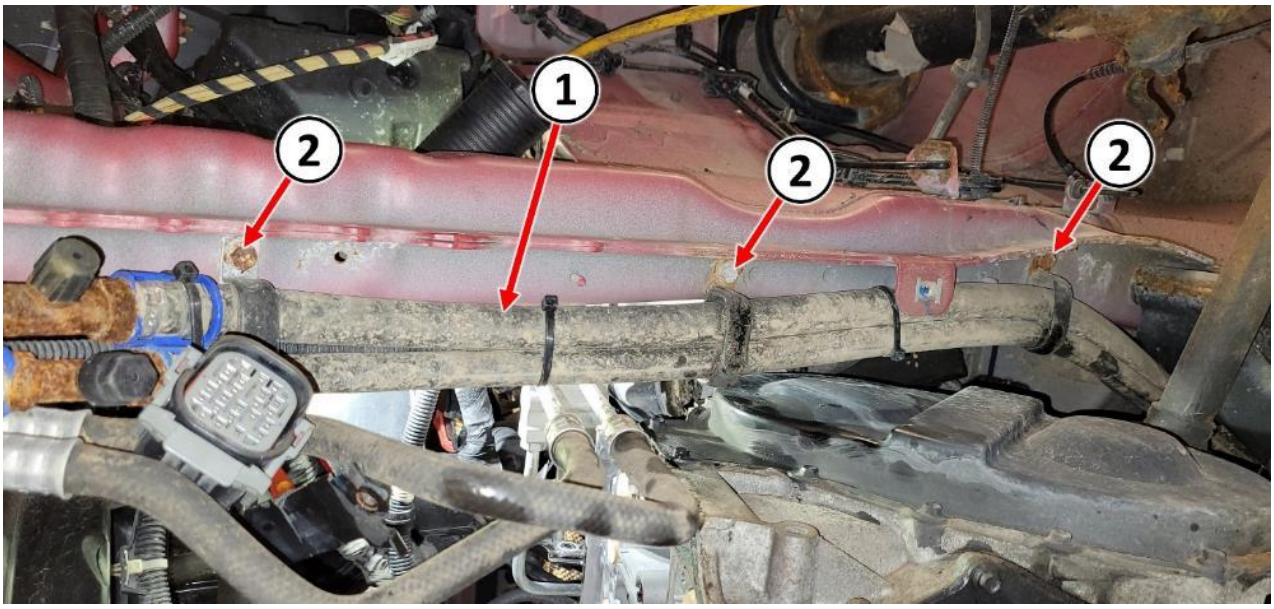

Figure 17 – Rear HVAC Refrigerant Hoses

28. Remove transfer gear cover-to-case bolts (2) (Figure 18).

29. Remove transfer gear cover (1) (Figure 18).

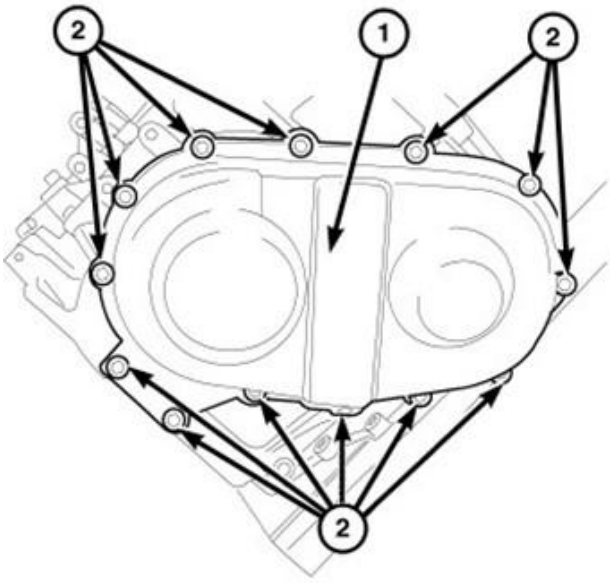

Figure 18 – Transfer Gear Cover

Strictly respect STELLANTIS Group safety, cleanliness, and environmental instructions for any vehicle service.
Document exclusively reserved for dealer information. Internal distribution to be ensured by dealer.
Reproduction forbidden without the written agreement of STELLANTIS Group. (C) 2024 STELLANTIS Group. All Rights Reserved (tdb)

30. Remove the plastic oil scavenger (1) (Figure 19).

NOTE: Broken retaining tabs (2) on the oil scavenger (1) are acceptable because the scavenger is held in place by the transfer gear cover. However, if the scavenger is broken in such a way as to compromise its functionality, then it must be replaced (Figure 19).

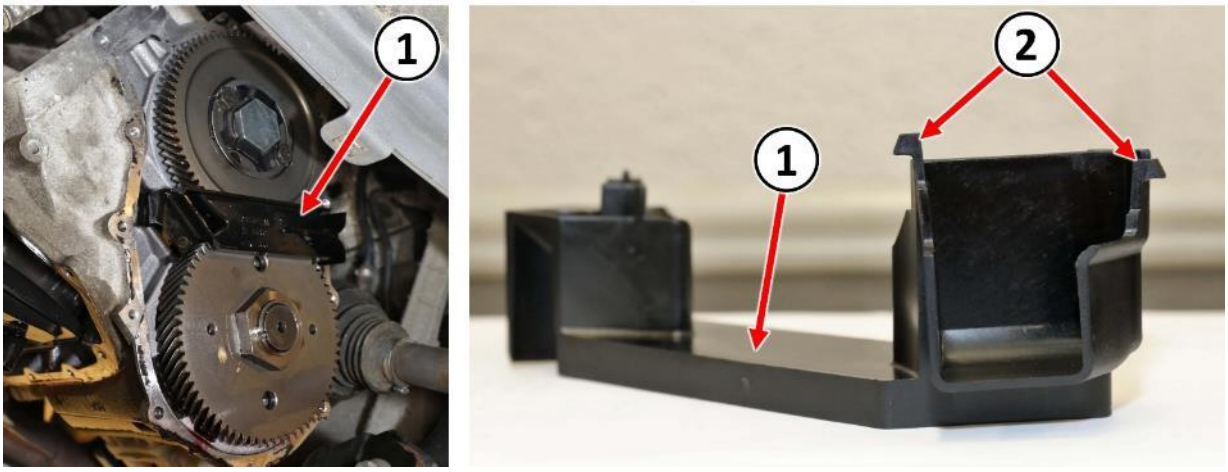

Figure 19 – Oil Scavenger

31. Protect the areas surrounding the transfer gear to prevent metal grinding chips from entering the transmission (Figure 20).

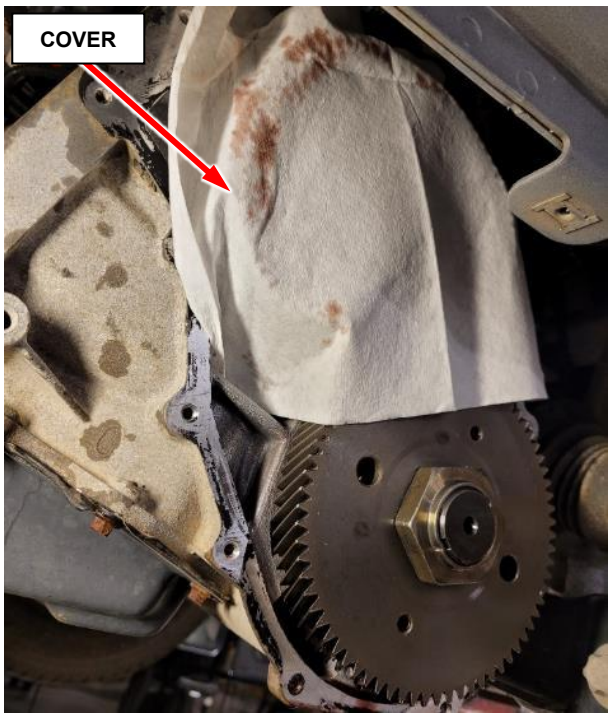

Figure 20 – Protect Transmission

Strictly respect STELLANTIS Group safety, cleanliness, and environmental instructions for any vehicle service.
Document exclusively reserved for dealer information. Internal distribution to be ensured by dealer.
Reproduction forbidden without the written agreement of STELLANTIS Group. (C) 2024 STELLANTIS Group. All Rights Reserved (tdb)

32. Grind the stakes (1) off transfer gear nut (Figure 21).

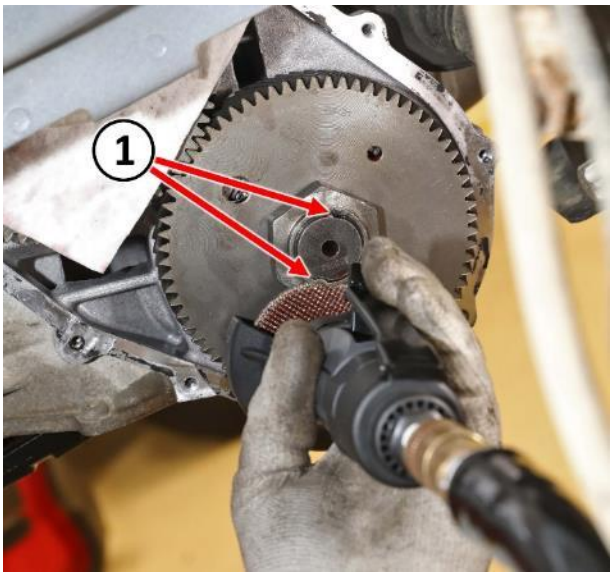

Figure 21 – Grind Off Stakes

33. Install Holder 9739 (1) onto the transfer gear (underdrive compounder side) (2) (Figure 22).

34. Using a 50mm socket (3), remove the nut securing the transfer gear (underdrive compounder side) (2) (Figure 22).

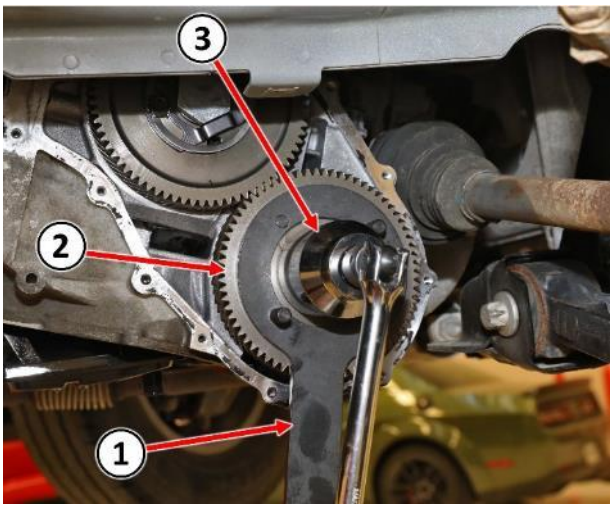

Figure 22 – Transfer Gear Nut

Strictly respect STELLANTIS Group safety, cleanliness, and environmental instructions for any vehicle service.
Document exclusively reserved for dealer information. Internal distribution to be ensured by dealer.
Reproduction forbidden without the written agreement of STELLANTIS Group. (C) 2024 STELLANTIS Group. All Rights Reserved (tdb)

35. Using Gear Puller L-4407A (1) and Thrust Button 6055 (3) release the transfer gear (underdrive compounder side) (2) then remove the gear puller (Figure 23).

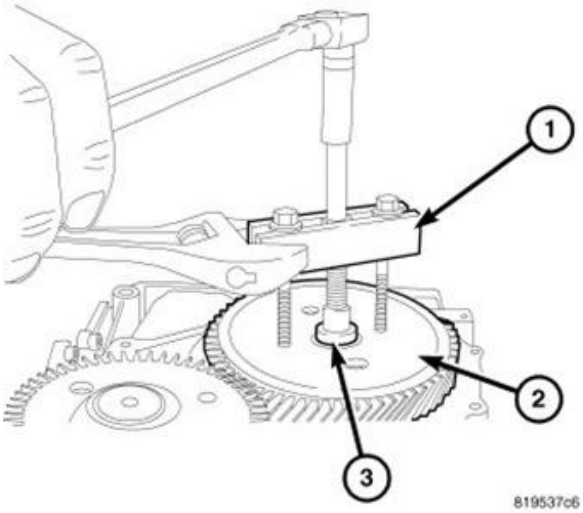

Figure 23 – Transfer Gear Puller

36. Remove the transfer gear (underdrive compounder side) (1) and select shim (2) from the underdrive compounder assembly (3) (Figure 24).

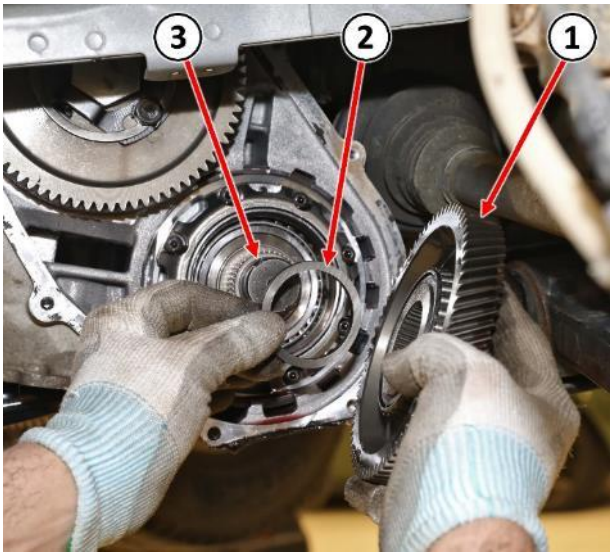

Figure 24 – Transfer Gear and Select Shim

Strictly respect STELLANTIS Group safety, cleanliness, and environmental instructions for any vehicle service.
Document exclusively reserved for dealer information. Internal distribution to be ensured by dealer.
Reproduction forbidden without the written agreement of STELLANTIS Group. (C) 2024 STELLANTIS Group. All Rights Reserved (tdb)

37. Remove and **DISCARD** the snap ring (1) at the underdrive compounder assembly (2) (Figure 25).

NOTE: A NEW snap ring will be used during assembly.

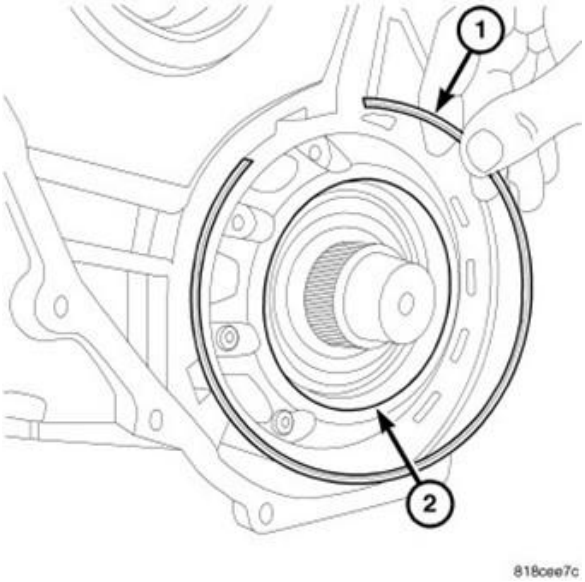

Figure 25 – Snap Ring

Strictly respect STELLANTIS Group safety, cleanliness, and environmental instructions for any vehicle service.
Document exclusively reserved for dealer information. Internal distribution to be ensured by dealer.
Reproduction forbidden without the written agreement of STELLANTIS Group. (C) 2024 STELLANTIS Group. All Rights Reserved (tdb)

38. Remove 4 bolts (1) from compounder bearing retainer to allow attachment of Puller Adapter 9908 (Figure 26).

    NOTE: The compounder bearing retainer bolts may be very tight so it is important to have a good fitting new driver tool (2) for removal of these bolts (1) or the bolts heads may become damaged during removal (Figure 26).

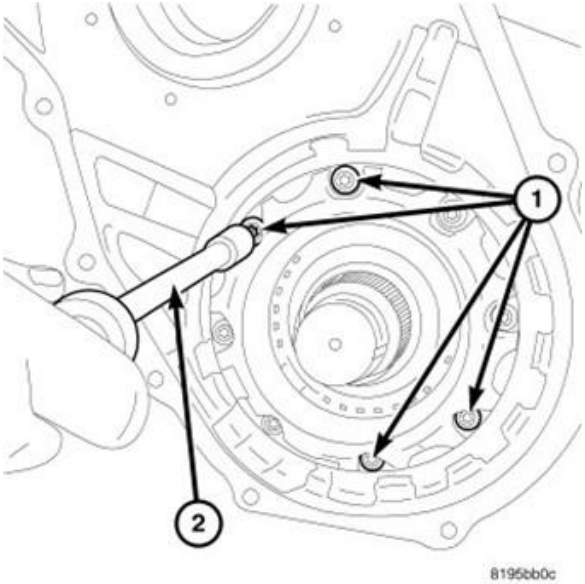

Figure 26 – Bearing Retainer Bolts

39. Install Puller Adapter 9908 (2) to the compounder bearing retainer (Figure 27).

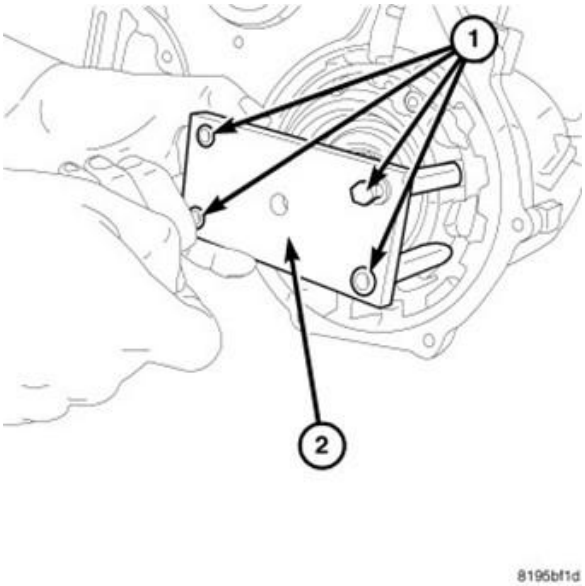

Figure 27 – Puller Adapter

Strictly respect STELLANTIS Group safety, cleanliness, and environmental instructions for any vehicle service.
Document exclusively reserved for dealer information. Internal distribution to be ensured by dealer.
Reproduction forbidden without the written agreement of STELLANTIS Group. (C) 2024 STELLANTIS Group. All Rights Reserved (tdb)

40. Install Slide Hammer C-3752 (1) to Puller Adapter 9908 (2). Then using slide hammer, release the underdrive compounder assembly from the transmission case (Figure 28).

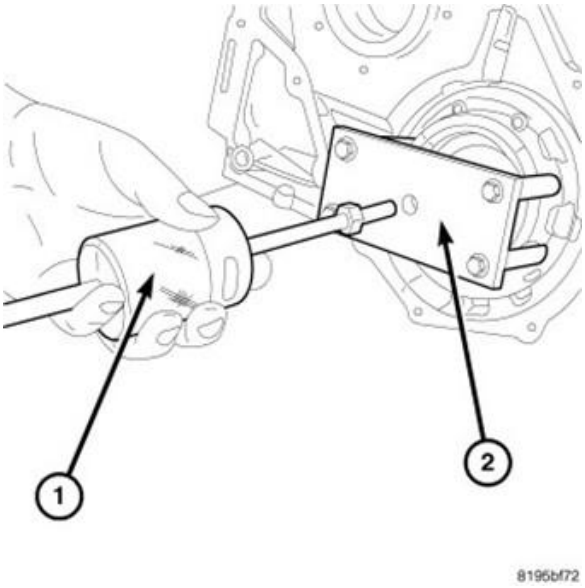

Figure 28 – Slide Hammer

41. Remove the underdrive compounder assembly (2) from the transmission (Figure 29).

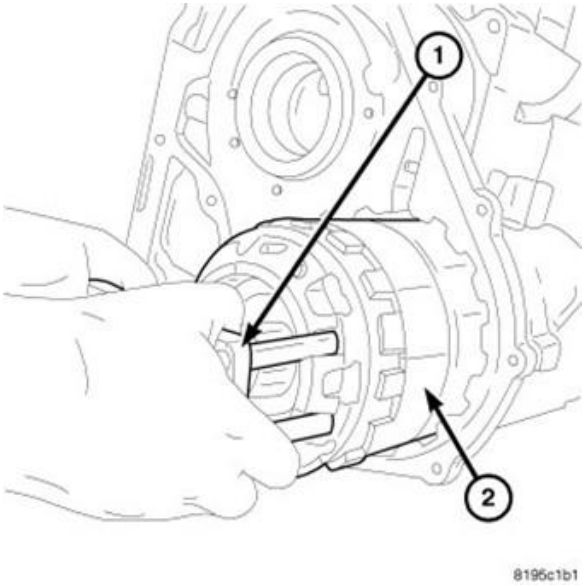

Figure 29 – Compounder Assembly

Strictly respect STELLANTIS Group safety, cleanliness, and environmental instructions for any vehicle service.
Document exclusively reserved for dealer information. Internal distribution to be ensured by dealer.
Reproduction forbidden without the written agreement of STELLANTIS Group. (C) 2024 STELLANTIS Group. All Rights Reserved (tdb)

42. Place the underdrive compounder assembly (1) on a clean work surface to prevent contamination (Figure 30).

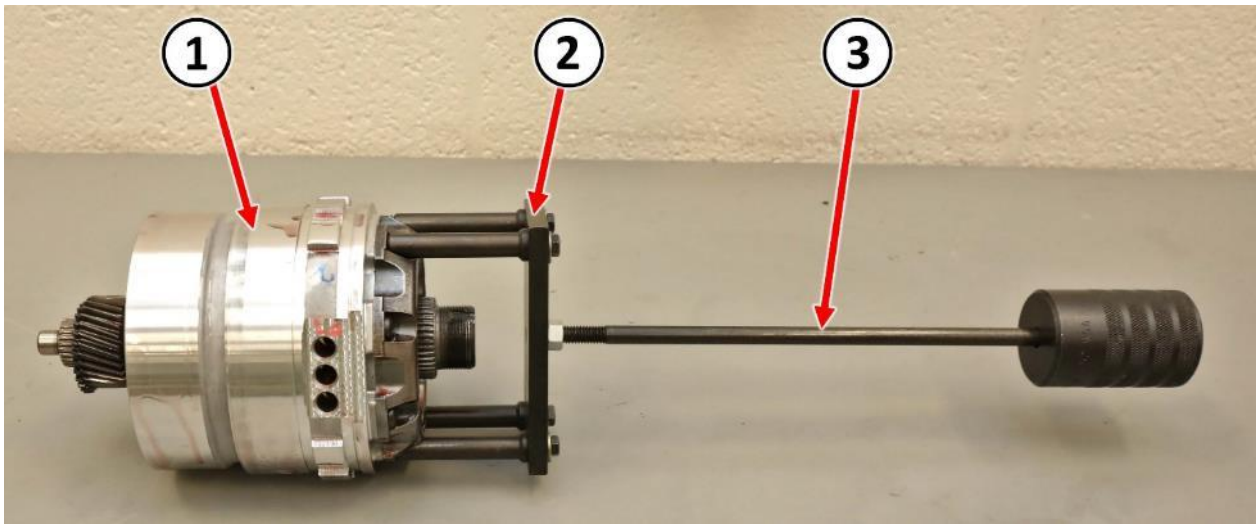

Figure 30 – Compounder Assembly on Clean Work Surface

43. Remove Slide Hammer C-3752 (3) from the Puller Adapter 9908 (2) (Figure 30).

44. Secure the Puller Adapter 9908 into a vise (2) to hold the underdrive compounder assembly (1) during disassembly (Figure 31).

45. If the thin sun gear (3) came out of the transmission attached to the underdrive compounder assembly (1) then place it back in its proper position within the transmission (Figure 31).

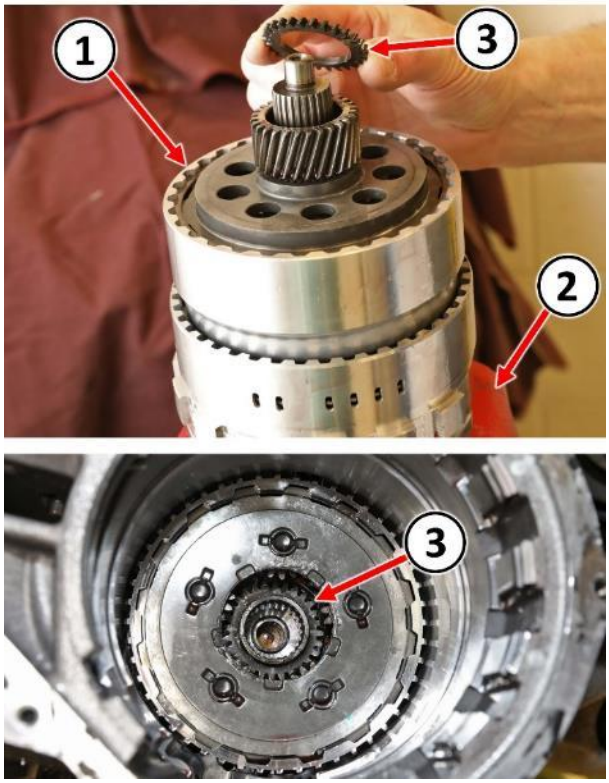

Figure 31 – Compounder Assembly

Strictly respect STELLANTIS Group safety, cleanliness, and environmental instructions for any vehicle service.
Document exclusively reserved for dealer information. Internal distribution to be ensured by dealer.
Reproduction forbidden without the written agreement of STELLANTIS Group. (C) 2024 STELLANTIS Group. All Rights Reserved (tdb)

46. Using two small picks (1), remove the retaining clip from transfer shaft (Figure 32).

Figure 32 – Sun Gear Retaining Clip

47. **DISCARD** the retaining clip (1) that was removed from the transfer shaft (Figure 33).

    NOTE: A NEW retaining clip will be used during assembly.

48. Remove the sun gear (2) from the transfer shaft (Figure 33).

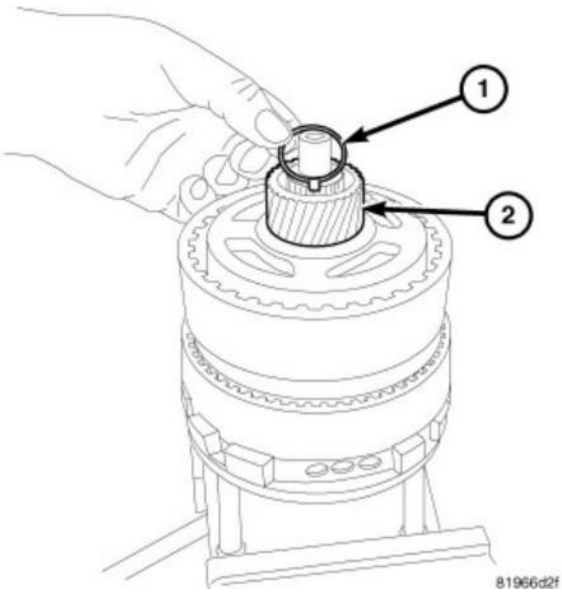

Figure 33 – Sun Gear Retaining Clip

Strictly respect STELLANTIS Group safety, cleanliness, and environmental instructions for any vehicle service.
Document exclusively reserved for dealer information. Internal distribution to be ensured by dealer.
Reproduction forbidden without the written agreement of STELLANTIS Group. (C) 2024 STELLANTIS Group. All Rights Reserved (tdb)

49. Using a small pick (2) remove and **DISCARD** the split needle bearing (1) from transfer shaft (Figure 34).

    NOTE: A NEW split needle bearing will be used during assembly.

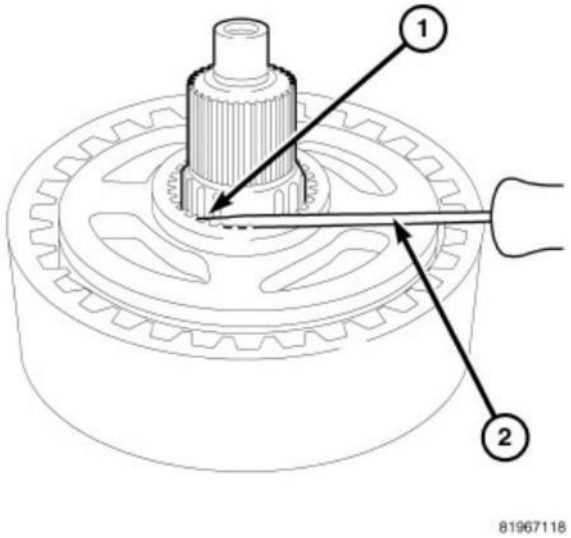

Figure 34 – Split Needle Bearing

50. Remove the direct clutch (1) from the low clutch (2) (Figure 35).

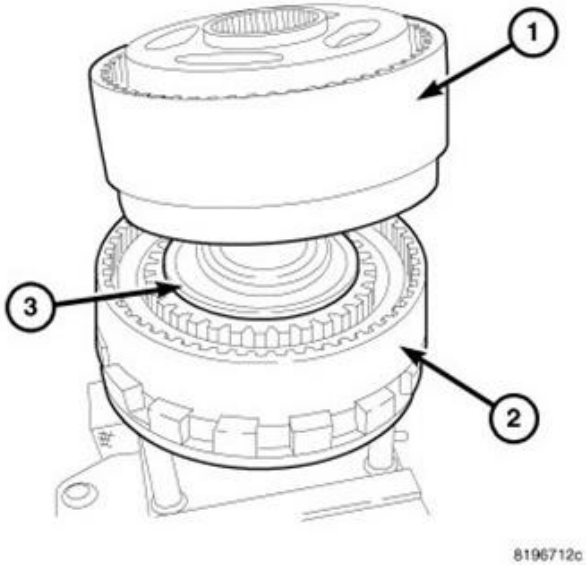

Figure 35 – Direct Clutch

Strictly respect STELLANTIS Group safety, cleanliness, and environmental instructions for any vehicle service.
Document exclusively reserved for dealer information. Internal distribution to be ensured by dealer.
Reproduction forbidden without the written agreement of STELLANTIS Group. (C) 2024 STELLANTIS Group. All Rights Reserved (tdb)

51. Remove the thrust bearing (1) from the overrunning clutch (2) (Figure 36).

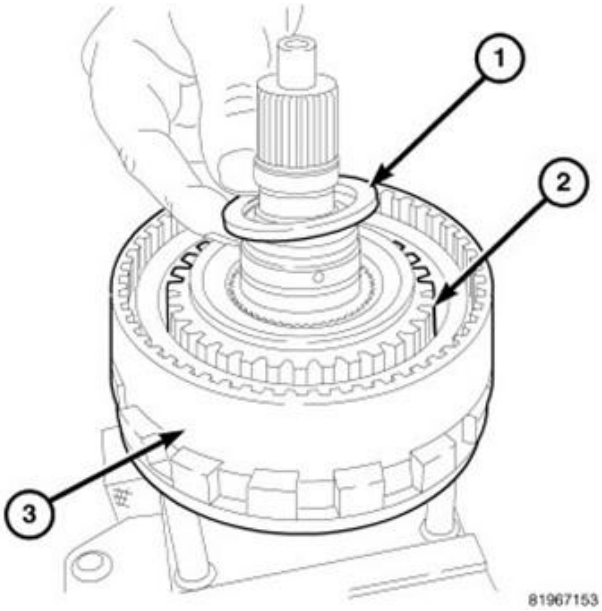

Figure 36 – Thrust Bearing

52. Remove the overrunning clutch (1) from the low clutch (2) (Figure 37).

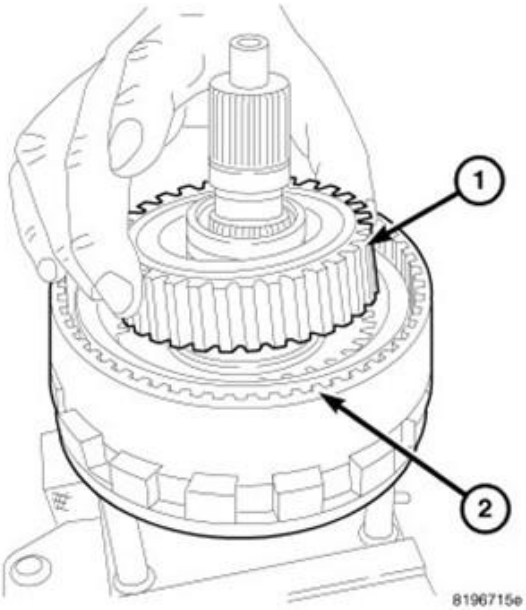

Figure 37 – Overrunning Clutch

Strictly respect STELLANTIS Group safety, cleanliness, and environmental instructions for any vehicle service.
Document exclusively reserved for dealer information. Internal distribution to be ensured by dealer.
Reproduction forbidden without the written agreement of STELLANTIS Group. (C) 2024 STELLANTIS Group. All Rights Reserved (tdb)

53. Remove the Puller Adapter 9908 (1) from the bearing retainer (2) (Figure 38).

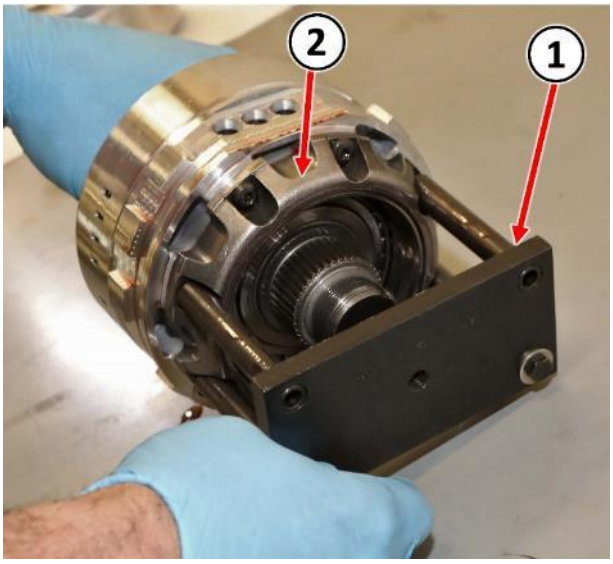

Figure 38 – Puller Adapter

54. Remove the remaining screws (1) securing the bearing retainer (2) to the compounder low clutch (3) (Figure 39).

NOTE: The compounder bearing retainer bolts may be very tight so it is important to have a good fitting new driver tool for removal of these bolts or the bolts heads may become damaged during removal.

55. Remove the bearing retainer (2) from the compounder low clutch (3) (Figure 39).

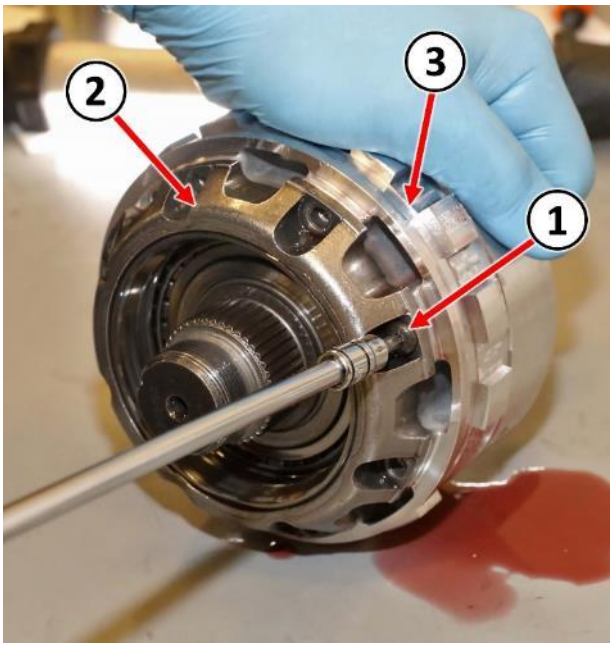

Figure 39 – Bearing Retainer

Strictly respect STELLANTIS Group safety, cleanliness, and environmental instructions for any vehicle service.
Document exclusively reserved for dealer information. Internal distribution to be ensured by dealer.
Reproduction forbidden without the written agreement of STELLANTIS Group. (C) 2024 STELLANTIS Group. All Rights Reserved (tdb)

56. Remove the underdrive shaft (1) from the low clutch (2) (Figure 40).

57. **DISCARD** the low clutch assembly (2) (Figure 40).

58. Obtain a **NEW** low clutch assembly (2) then reassemble compounder components in reverse order (Figure 40).

59. Install the underdrive shaft (1) to the lower clutch (2) (Figure 40).

60. Install the bearing retainer (2) to the lower clutch (3) (Figure 39).

61. Install four compounder bearing retainer screws leaving four screws out for installation of Puller Adapter 9908 (Figure 39).

    NOTE: Compounder bearing retainer screws will be tightened to the proper torque later in this procedure.

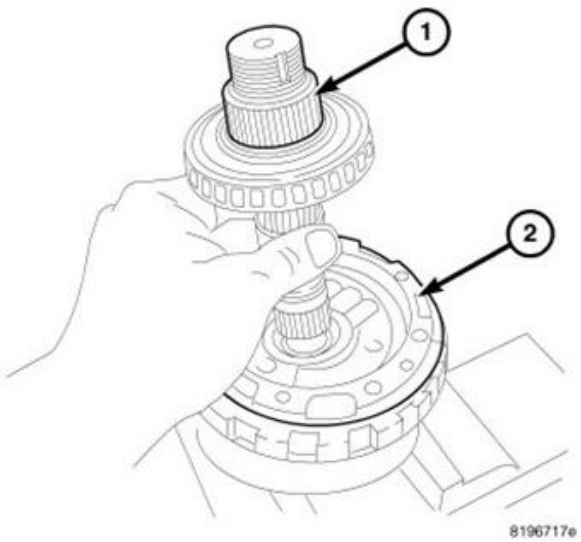

Figure 40 – Underdrive Shaft

62. Install the Puller Adapter 9908 (1) to the bearing retainer (2) then secure the Puller Adapter 9908 (1) in a vise to hold the underdrive compounder assembly during assembly (Figure 38).

63. Install the overrunning clutch (1) to the low clutch (2) (Figure 37).

64. Install the thrust bearing (1) to the overrunning clutch (2) (Figure 36).

65. Install the direct clutch (1) to the low clutch (2) (Figure 35).

66. Install a **NEW** split bearing (1) using a small pick (2) to properly position it (Figure 34).

67. Install the sun gear (2) on the transfer shaft (Figure 33).

68. Obtain a **NEW** retaining clip (1) then remove the shipping tab (2) (Figure 41).

69. Install the **NEW** retaining clip on the transfer shaft with the three tabs on the clip facing toward the underdrive compounder assembly (Figure 33).

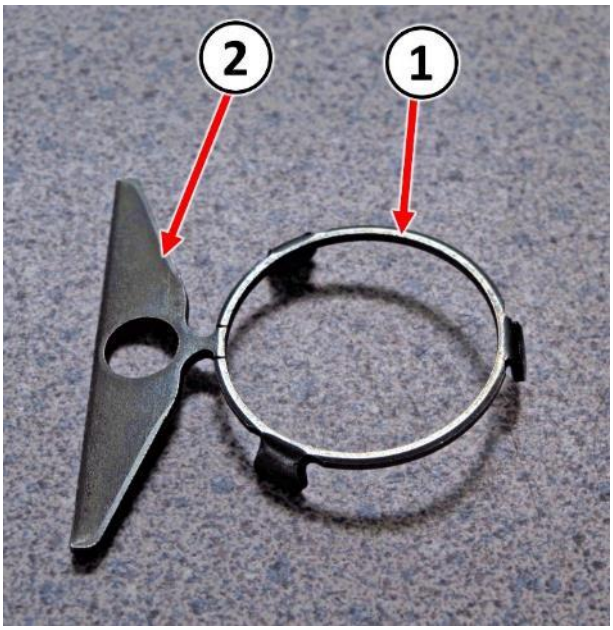

Figure 41 – Retaining Clip

Strictly respect STELLANTIS Group safety, cleanliness, and environmental instructions for any vehicle service.
Document exclusively reserved for dealer information. Internal distribution to be ensured by dealer.
Reproduction forbidden without the written agreement of STELLANTIS Group. (C) 2024 STELLANTIS Group. All Rights Reserved (tdb)

70. While holding the Puller Adapter 9908 (1), insert the underdrive compounder assembly into the transmission case (Figure 29).

    NOTE: Ensure the underdrive compounder assembly is fully seated in the transmission case.

71. Remove the Puller Adapter 9908 (2) from the compounder bearing retainer (Figure 27).

72. Install all the remaining bolts (1) to the compounder bearing retainer then tighten all the bolts in a criss-cross pattern to 12 N·m (105 in. lbs.) (Figure 26).

    CAUTION: Snap ring is bevelled and MUST be installed in the proper orientation. When looking directly at the snap ring, the notch end and blunt ends must be oriented as shown regardless of clock position of snap ring when installed in the transmission. The snap ring ends should be oriented so that the ends are in an open space rather than in the snap ring groove (Figure 42).

73. Obtain a **NEW** snap ring, then install that **NEW** snap ring to retain the underdrive compounder assembly. Ensure the snap ring is fully seated in the snap ring groove (Figure 42).

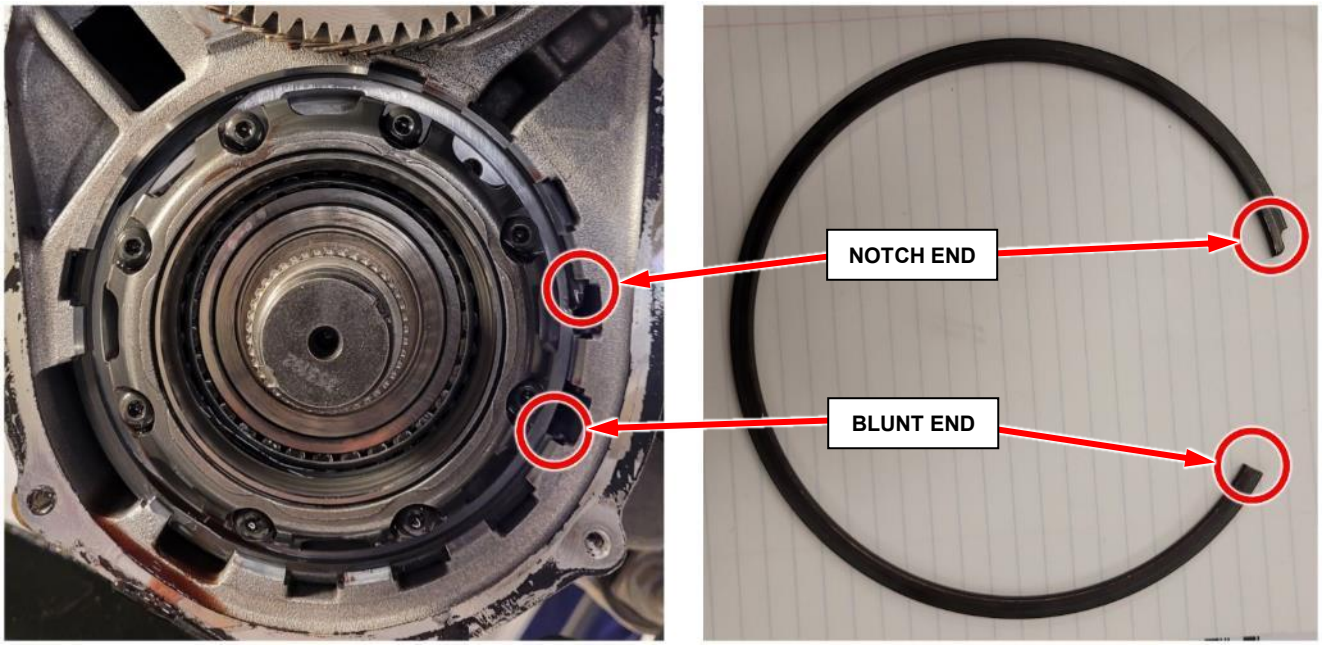

Figure 42 – Snap Ring Installation Orientation

74. Install the select shim (2) and transfer gear (1) to the underdrive compounder assembly (3) (Figure 24).

Strictly respect STELLANTIS Group safety, cleanliness, and environmental instructions for any vehicle service.
Document exclusively reserved for dealer information. Internal distribution to be ensured by dealer.
Reproduction forbidden without the written agreement of STELLANTIS Group. (C) 2024 STELLANTIS Group. All Rights Reserved (tdb)

75. Obtain and install by hand a **NEW** nut for retaining the transfer gear to the underdrive shaft (Figure 43).

76. Install Holder 9739 (1) onto the transfer gear (2) (Figure 22).

77. Using a 50mm socket (3), tighten the transfer gear nut to 271 N·m (200 ft. lbs.) (Figure 22).

78. Use Staking Tool 9721 (2), align the tool with the stake slots in the transfer shaft (4) then stake the **NEW** nut (1) (Figure 44).

79. Ensure the stakes (3) in the nut (1) are indented into the slots on the transfer shaft (4) (Figure 44).

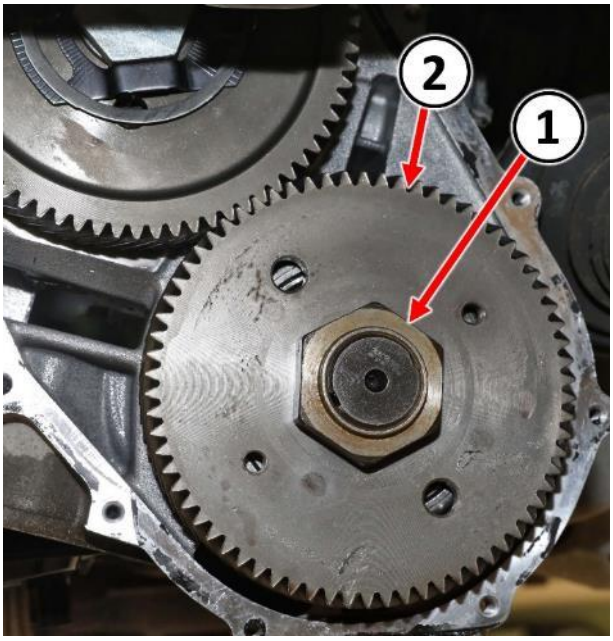

Figure 43 – Transfer Gear Nut

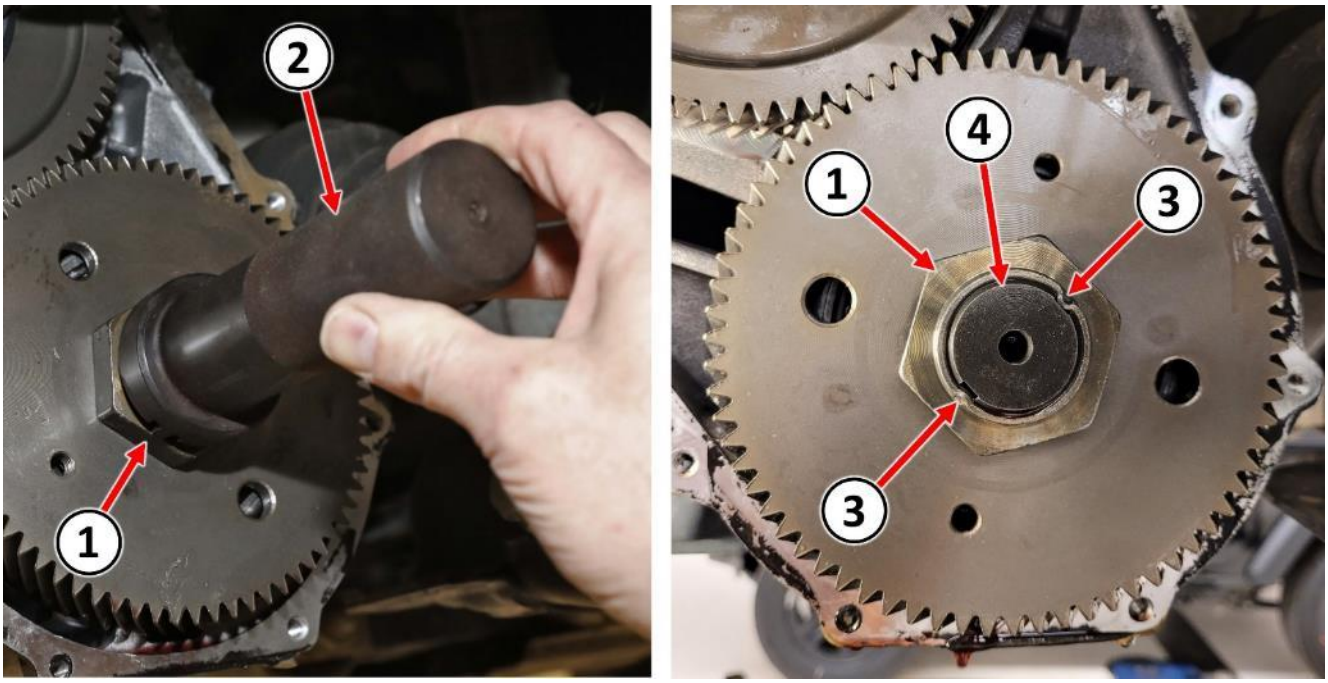

Figure 44 – Staking Transfer Gear Nut

Strictly respect STELLANTIS Group safety, cleanliness, and environmental instructions for any vehicle service.
Document exclusively reserved for dealer information. Internal distribution to be ensured by dealer.
Reproduction forbidden without the written agreement of STELLANTIS Group. (C) 2024 STELLANTIS Group. All Rights Reserved (tdb)

80. Install the plastic oil scavenger (1) (Figure 19).

    NOTE: Broken retaining tabs (2) on the oil scavenger (1) are acceptable because the scavenger is held in place by the transfer gear cover. However, if the scavenger is broken in such a way as to compromise its functionality, then it must be replaced (Figure 19).

81. Clean the mating surfaces on the transmission and transfer gear cover (1) then apply a bead of MOPAR® ATF RTV (MS-GF41) (2) to the cover sealing surface (Figure 45).

82. Position the transfer gear cover (1) to the transmission then install the transfer gear cover bolts (2) and tighten to 12 N·m (105 in. lbs.) (Figure 18).

Figure 45 – Transfer Gear Cover

83. If the vehicle is equipped with rear air conditioning, install the screws (2) securing the refrigerant hoses (1) to the frame rail (Figure 17).

84. Apply transmission oil on the oil transfer tubes O-rings (1) (Figure 16).

85. Install the oil transfer tubes (2) into the case/compounder (Figure 16).

86. Position the valve body (1) to the oil transfer tubes (2) and manual valve (3) at the rooster comb (Figure 15).

87. Install the valve body bolts (1) and tighten to 7 N·m (50 in. lbs.) (Figure 14).

88. Position the detent spring (4) then install the bolt (3) securing the detent spring and tighten the bolt to 7 N·m (50 in. lbs.) (Figure 13).

89. Install the electrical connector (1) to the range sensor (2) (Figure 13).

90. Clean the mating surfaces on the valve body oil pan (1) then apply a bead of MOPAR® ATF RTV (MS-GF41) (2) to the oil pan (1) sealing surface (Figure 46).

    NOTE: Stud locations were identified during the removal procedure.

91. Position the valve body oil pan (1) to the transmission then install the valve body oil pan fasteners (2) and tighten to 12 N·m (105 in. lbs.) (Figure 12).

92. If the transmission oil pan was removed to drain the transmission fluid, install the oil pan now. Follow the same procedure for RTV application and fastener torque specifications as for the transfer gear cover and valve body oil pan.

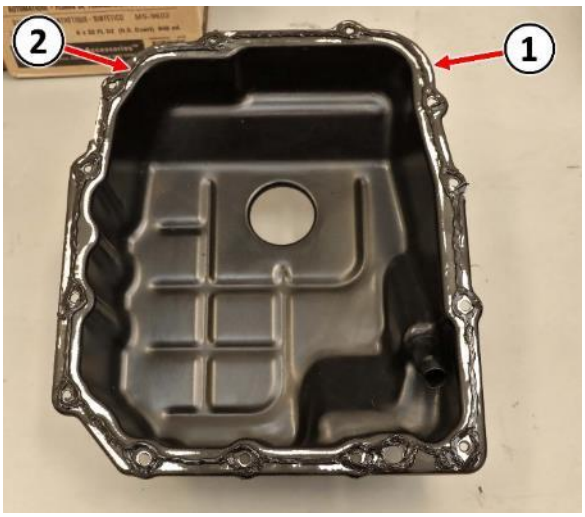

Figure 46 – Valve Body Oil Pan

Strictly respect STELLANTIS Group safety, cleanliness, and environmental instructions for any vehicle service.
Document exclusively reserved for dealer information. Internal distribution to be ensured by dealer.
Reproduction forbidden without the written agreement of STELLANTIS Group. (C) 2024 STELLANTIS Group. All Rights Reserved (tdb)

93. If equipped, install the front sound dampener cover (2) and the fasteners (1) (Figure 11).

94. Attach the retainer (1) securing the wire harness (2) to the valve body oil pan (3) (Figure 10).

95. Connect the solenoid pack electrical connector (1) at valve body oil pan (1) (Figure 9).

96. Install and securely tighten the bolt (2) attaching the wire harness bracket (4) to the transmission (Figure 9).

97. Install the transmission cooler tube retainers with brackets to the transmission and securely tighten nuts (3) (Figure 8).

98. Position the two cooler tubes to the retainers then fasten the retainers around the cooler tubes (Figure 8).

99. If equipped, install the belly pan (Figure 7).

100. Position the left front wheelhouse splash shield (1) to the vehicle (Figure 6).

101. Install the fasteners (3) and (2) securing the left front wheelhouse splash shield (Figure 6).

102. Clean wheel mounting surfaces, removing any build-up of corrosion. It is important to have good metal-to-metal contact between the wheel and vehicle.

103. Position the tire and wheel assembly on the hub pilot as a guide. Place and hold the wheel flush up against the mounting surface.

104. Install and lightly snug all five wheel mounting (lug) bolts.

105. Progressively tighten all five wheel mounting (lug) bolts (1) in a star pattern to 197 N·m (145 Ft-Lbs).

106. Lower the vehicle.

107. Install the negative battery cable onto the battery post. Lock the clamp (1) (Figure 4).

108. Install the battery cover (1) and related fasteners (2, 3) (Figure 3).

Strictly respect STELLANTIS Group safety, cleanliness, and environmental instructions for any vehicle service.
Document exclusively reserved for dealer information. Internal distribution to be ensured by dealer.
Reproduction forbidden without the written agreement of STELLANTIS Group. (C) 2024 STELLANTIS Group. All Rights Reserved (tdb)

109. Install a battery charger. Verify that the charging rate provides 13.0 to 13.5 volts. Do not allow the charger to time out during the wiTECH session. Set the battery charger timer (if so equipped) to continuous charge.

NOTE: Use an accurate stand-alone voltmeter. The battery charger volt meter may not be sufficiently accurate. If voltage reading is too high, apply an electrical load by activating the park or headlamps and/or HVAC blower motor to lower the voltage.

110. Connect the wiTECH micro pod II to the vehicle data link connector.

111. Place the ignition in the "**RUN**" position.

112. Open the wiTECH 2.0 website.

113. Enter your "**User id**" and "Password" and your "**Dealer Code**", then select "**Sign In**" at the bottom of the screen. Click "**Accept**".

114. From the "**Vehicle Selection**" screen, select the appropriate vehicle.

115. Remove the dipstick tube cap (1) then add 4 quarts of transmission fluid (Figure 5).

WARNING: There is a risk of accident from vehicle moving when the engine is running. Secure vehicle to prevent it from moving. There is a risk of injury from contusions and burns if you insert your hands into the engine when it is running. Do not touch hot or rotating parts. Wear properly fitted work clothes.

116. Verify that the vehicle is parked on a level surface.

117. Actuate the service brake. Start engine and let it run at idle speed in selector lever position "**P**".

118. Shift through the transmission modes several times with the vehicle stationary and the engine idling.

NOTE: When inserting dipstick special tool 9336A, excess insertion force may cause the dipstick to slip past the stop on the bracket in the transmission oil pan. An approximate distance that the dipstick should be inserted into the fill tube is 424 mm (16.69 in.).

119. Warm up the transmission, wait at least 2 minutes and check the oil level with the engine running. Push the Oil Dipstick 9336A into transmission fill tube until the dipstick tip contacts the oil pan and pull out again, read off oil level, repeat if necessary.

Strictly respect STELLANTIS Group safety, cleanliness, and environmental instructions for any vehicle service.
Document exclusively reserved for dealer information. Internal distribution to be ensured by dealer.
Reproduction forbidden without the written agreement of STELLANTIS Group. (C) 2024 STELLANTIS Group. All Rights Reserved (tdb)

NOTE: The dipstick will protrude from the fill tube when installed.

120. Check transmission oil temperature using the appropriate scan tool.

121. The transmission Oil Dipstick 9336A has indicator marks every 10 mm. Determine the height of the oil level on the dipstick and using the height, the Transmission Fluid Temperature (TFT) as viewed with the scan too, and the Transmission Fluid Graph, determine if the transmission oil level is correct (Figure 47).

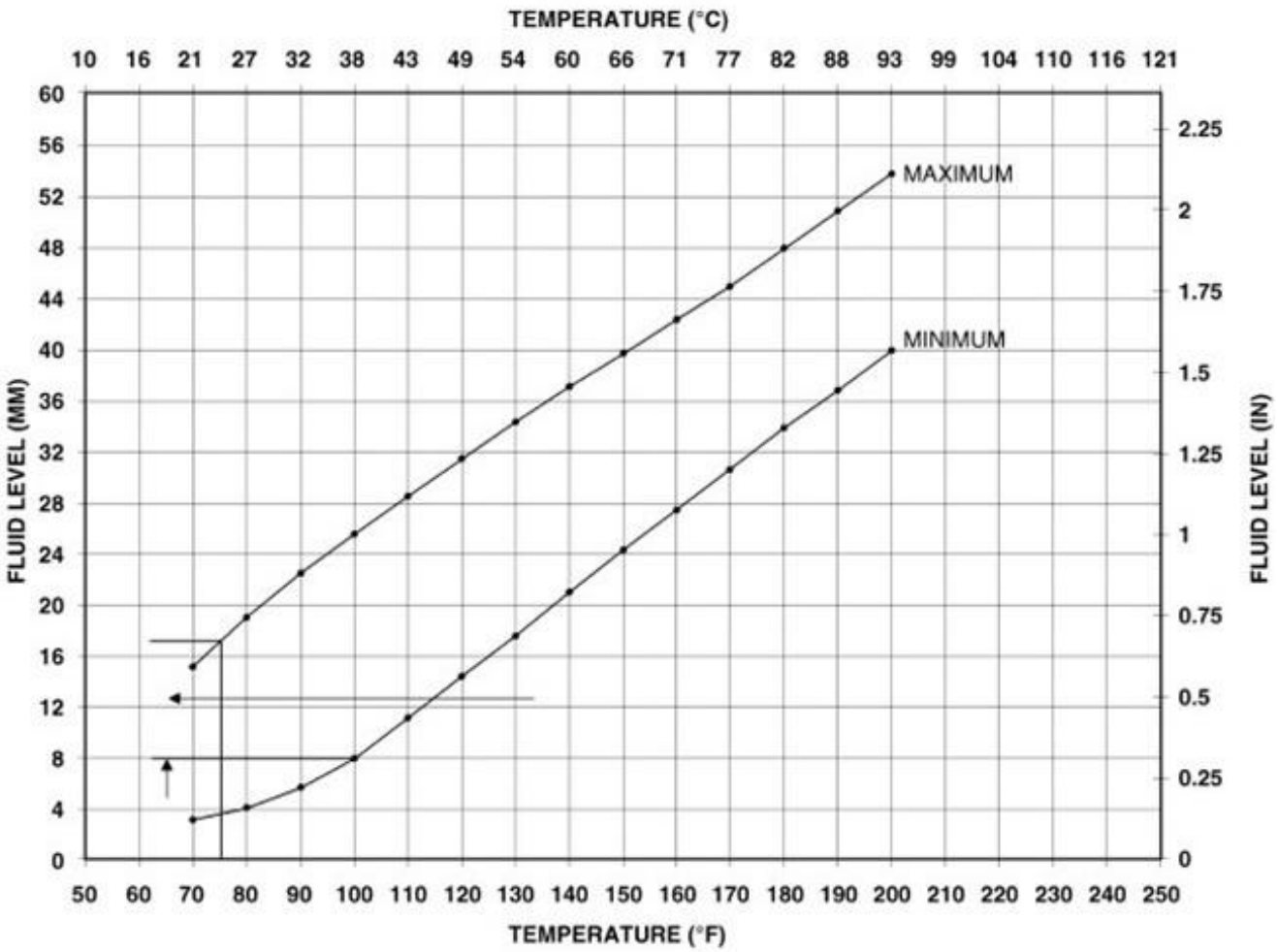

Figure 47 – Fluid Level / Temperature Chart

122. Add or remove oil as necessary and recheck the oil level.

Strictly respect STELLANTIS Group safety, cleanliness, and environmental instructions for any vehicle service.
Document exclusively reserved for dealer information. Internal distribution to be ensured by dealer.
Reproduction forbidden without the written agreement of STELLANTIS Group. (C) 2024 STELLANTIS Group. All Rights Reserved (tdb)

123. Once the oil level is correct, install the dipstick tube cap (Figure 5).

124. Within wiTECH, navigate to the TCM icon and select the "**Quick Learn**" procedure then follow the on-screen instructions to reset and learn the clutch adaptive values.

125. Within wiTECH, select the "**Clear All DTCs**" tab, then click "**Clear All DTCs**" and then select "**Close**". It may be necessary to cycle the ignition OFF to RUN to clear the codes.

126. Place the ignition in the "**OFF**" position and then remove the wiTECH micro pod II device from the vehicle.

127. Remove the battery charger from the vehicle and close the hood.

128. Road test the vehicle to make sure transmission functions normally as expected shifting through all gear ranges.

129. Return vehicle to customer.

Strictly respect STELLANTIS Group safety, cleanliness, and environmental instructions for any vehicle service.
Document exclusively reserved for dealer information. Internal distribution to be ensured by dealer.
Reproduction forbidden without the written agreement of STELLANTIS Group. (C) 2024 STELLANTIS Group. All Rights Reserved (tdb)

This notice applies to your vehicle,

[Model Year and Model]
VIN XXXXXXXXXXXXXXXXX

61A/NHTSA 23V- 301

LOGO

VEHICLE PICTURE

YOUR SCHEDULING OPTIONS

1. **RECOMMENDED OPTION**
   Call your authorized Business*Link* dealer.

2. **Call the FCA Recall Assistance Center at 1-800-853-1403. An agent can confirm part availability and help schedule an appointment**

3. **Visit recalls.mopar.com, scan the QR code below, or download the Mopar Owner's Companion App.**

QR Code

Get access to recall notifications, locate your nearest dealer, and more through this website or Mopar Owner's Companion App. You will be asked to provide your Vehicle Identification Number (VIN) to protect and verify your identity. The last eight characters of your VIN are provided above.

DEALERSHIP INSTRUCTIONS
Please reference Safety Recall 61A.

IMPORTANT SAFETY RECALL

Park Engagement

Dear [Name],

This notice is sent to you in accordance with the National Traffic and Motor Vehicle Safety Act.

FCA US LLC has decided that a defect, which relates to motor vehicle safety, exists in certain [2019 - 2020 Model Year (VF) Ram ProMaster] vehicles equipped with the 62TE transmission.

It is extremely important to take steps now to repair your vehicle to ensure the safety of you and your passengers.

WHY DOES MY VEHICLE NEED REPAIRS?

The transmission on your vehicle [1] may not allow the park pawl to fully engage the park gear due to debris interference. **A partially engaged park pawl may lead to a vehicle roll away increasing the likelihood of a vehicle crash without prior warning and/or injury to those in or around the vehicle.**

HOW DO I RESOLVE THIS IMPORTANT SAFETY ISSUE?

FCA US will repair your vehicle [2] free of charge (parts and labor). To do this, your dealer will update the Powertrain Control Module (PCM) calibration software, and replace components within the transmission, or inspect, and if necessary, replace the transmission. The estimated repair time is four hours. In addition, your dealer will require your vehicle for proper check-in, preparation, and check-out during your visit, which may require more time. Your time is important to us, so we recommend that you schedule a service appointment to minimize your inconvenience. Please bring this letter with you to your dealership.

TO SCHEDULE YOUR FREE REPAIR,
CALL YOUR BUSINESS*LINK* DEALER TODAY

WHAT IF I ALREADY PAID TO HAVE THIS REPAIR COMPLETED?

If you have already experienced this specific condition and have paid to have it repaired, you may visit **www.fcarecallreimbursement.com** to submit your reimbursement request online. [3] Once we receive and verify the required documents, reimbursement will be sent to you within 60 days. If you have had previous repairs performed and/or already received reimbursement, you may still need to have the recall repair performed.

We apologize for any inconvenience, but are sincerely concerned about your safety. Thank you for your attention to this important matter.

Customer Assistance/Field Operations
FCA US LLC

FIAT CHRYSLER AUTOMOBILES

Mr. Mrs. Customer
1234 Main Street
Hometown, MI 48371

[1] If you no longer own this vehicle, please help us update our records. Call the FCA Recall Assistance Center at 1-800-853-1403 to update your information.

[2] If your dealer fails or is unable to remedy this defect without charge and within a reasonable time, you may submit a written complaint to the Administrator, National Highway Traffic Safety Administration, 1200 New Jersey Ave., S.E., Washington, DC 20590, or you can call the toll-free Vehicle Safety Hotline at 1-888-327-4236 (TTY 1-800-424-9153), or go to safercar.gov.

[3] You can also mail in your original receipts and proof of payment to the following address for reimbursement consideration: FCA Customer Assistance, P.O. Box 21-8004, Auburn Hills, MI 48321-8007, Attention: Recall Reimbursement.

Note to lessors receiving this recall notice: Federal regulation requires that you forward this recall notice to the lessee within 10 days.