March 2023

Dealer Service Instructions for:

Equipment Safety Recall 21A
NHTSA 23E-019
Anti-lock Brake System Hydraulic Control Unit

Remedy Available

FCA US LLC (FCA US) has announced a safety recall on certain Anti-lock Brake System (ABS) Hydraulic Control Units (HCU)s part number 68085397AB.

Intended for use with some of the following vehicles:

- *2011 - 2022 (WK) Jeep Grand Cherokee*
- *2011 - 2020 (WD) Dodge Durango*

Subject

Some of the above HCU / ABS modules may falsely read pressure in the primary circuit. When installed in a vehicle, an HCU / ABS module which falsely reads pressure in the primary circuit may illuminate the brake lights, as well as allow the vehicle to start and shift out of park without the brake pedal being depressed. This condition can cause unintended vehicle movement which can cause a vehicle crash without prior warning and/or injury to others outside the vehicle.

Repair

Inspect the Julian date code of HCU manufacturing and repurchase suspect HCUs. If installed on a vehicle, replace the HCU.

Parts Information

Part Number	Qty.	Description
68085397AB	1	Hydraulic Control Unit
04318080AD	A/R	Brake fluid DOT 3 12oz. bottle (**MS-4574**) (Expected volume of fluid per vehicle 800ml)

Parts Return

No parts return required for this campaign.

Render the recalled Hydraulic Control Unit unusable and discard.

Special Tools

The following special tools are required to perform Hydraulic Control Unit (HCU) replacement:

- NPN — wiTECH MicroPod II
- NPN — Laptop Computer
- NPN — wiTECH Software
- NPN — Brake Bleeding Equipment
- 6921 — Cap, Master Cylinder
- NPN — Brake Holding Tool

<u>Uninstalled</u> Hydraulic Control Unit (HCU) Inspection Procedure

<u>Procedure for Uninstalled HCU Inspection</u>:

1. Locate the pin stamp ID number on the HCU aluminum body.
2. Julian Date is the 3rd to 6th digits.
3. Suspect range **8166** to **9106**
   - **If HCU is suspect**: Repurchase suspect HCU.
   - **If HCU is NOT suspect**: Return HCU to customer.

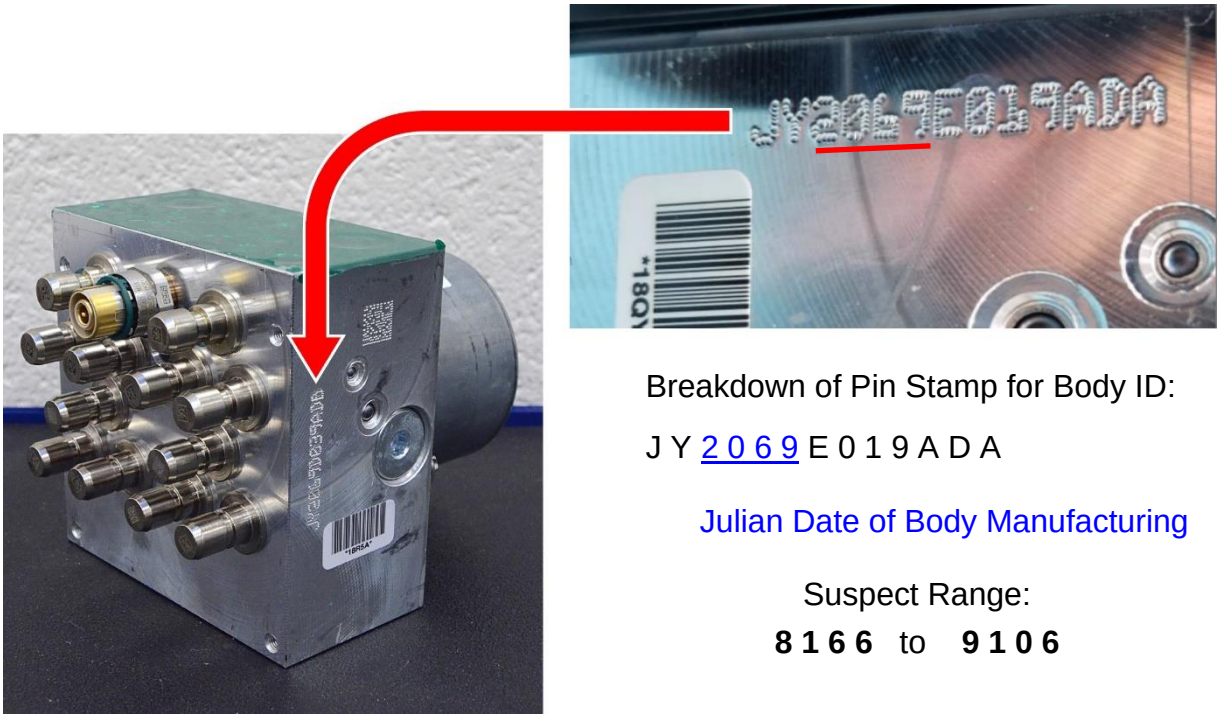

Figure 1 – Pin Stamp ID Number on the HCU Aluminum Body

<u>For Installed HCU Inspection Continue to Next Page</u>:

<u>Installed</u> Hydraulic Control Unit (HCU) Inspection Procedure

<u>Procedure for Installed HCU Inspection:</u>

1. Take note of the customer's preferred seat position then move the front passenger seat fully forward.

2. Cycle the ignition to the Off position. Be certain that all electrical accessories are turned off.

3. Open the battery access cover located under the passenger front seat.

4. If equipped with an Intelligent Battery Sensor (IBS), disconnect the IBS connector first before disconnecting the battery negative cable.

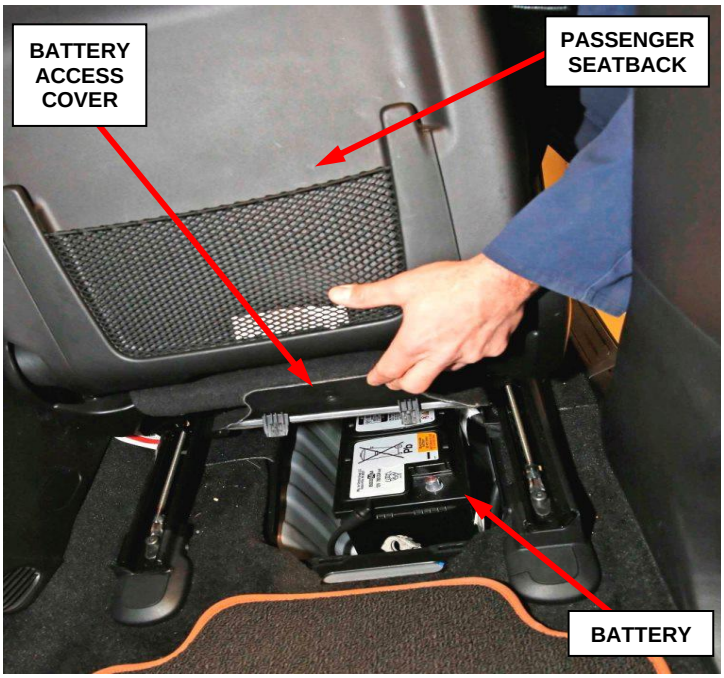

Figure 2 – Battery Access

5. Disconnect and isolate the battery negative cable by loosening the captive nut securing the terminal end to the post. Do no attempt to remove the captive nut as damage to the threads may occur (Figure 2).

6. **Remove the engine cover**. Some engine covers can be removed by gently lifting vertically to disengage the engine cover grommets. Others require oil filter access cover or additional fasteners removed first before engine cover removal. If unsure of the proper procedure to remove the engine cover, please refer to Service Library for proper engine cover removal procedure.

   NOTE: Place the engine cover with the appearance surface upward to prevent damage and scratches.

<u>Installed</u> (HCU) Inspection Procedure [Continued]

7. **If equipped**, disconnect the wire harness connector (1) from the Inlet Air Temperature (IAT) sensor and wire harness retainer (2) from the air cleaner resonator (Figure 3).

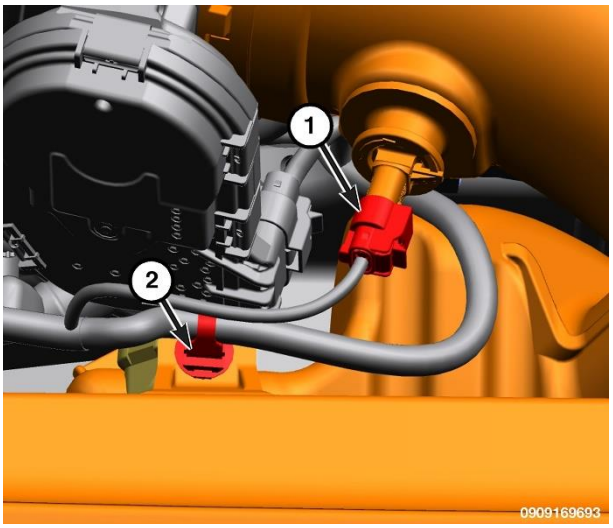

Figure 3 – Inlet Air Temperature Sensor

8. **If equipped**, disconnect the wire harness connector (1) from the Mass Air Flow (MAF) sensor and wire harness retainer (2) from the air cleaner housing (Figure 4).

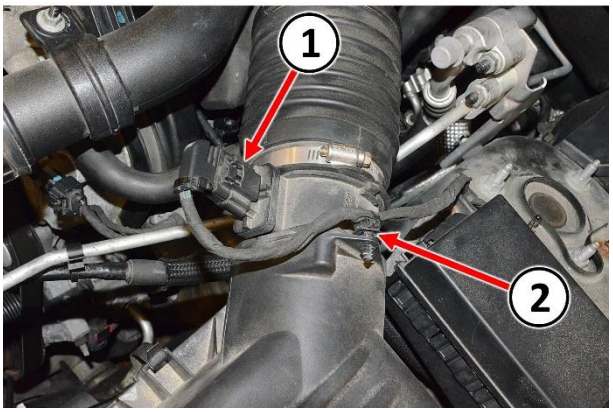

Figure 4 – Mass Air Flow Sensor

<u>Installed</u> (HCU) Inspection Procedure [Continued]

9. Inlet air tube or resonator. Loosen the clamp (1) at the throttle body and clamp (2) at air cleaner body. (Figure 5) shows a 3.6L engine, other engines are similar.

10. Disengage any rubber grommets or fasteners (3) securing the inlet air tube or resonator (Figure 5).

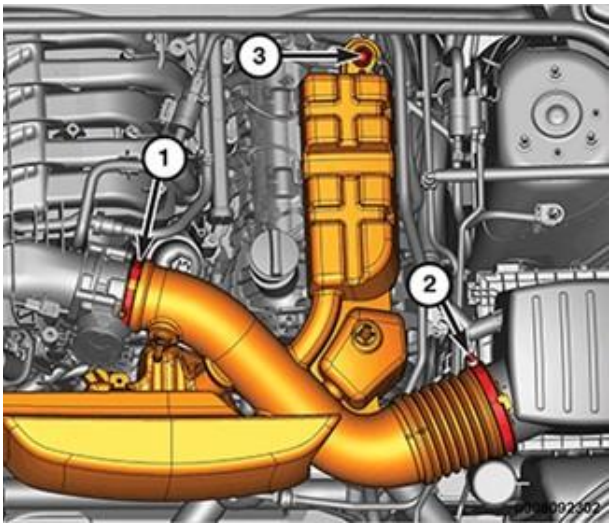

Figure 5 – Inlet Air Tube / Resonator 3.6L Shown Others Similar

11. Remove the inlet air tube or resonator assembly from the vehicle. Air inlet design may vary depending on engine and vehicle (Figure 6).

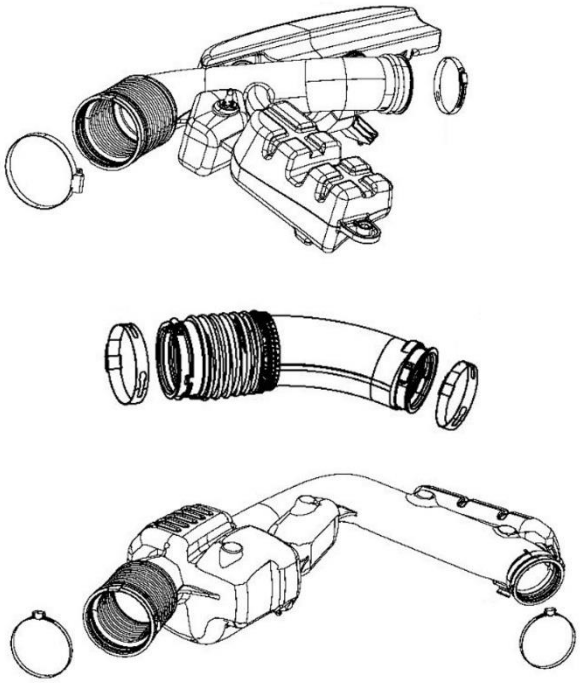

Figure 6 – Inlet Air Tube / Resonator Design May Vary Depending on Engine and Vehicle

<u>Installed</u> (HCU) Inspection Procedure [Continued]

12. Remove the hood seal (1) from the air cleaner body (Figure 7).

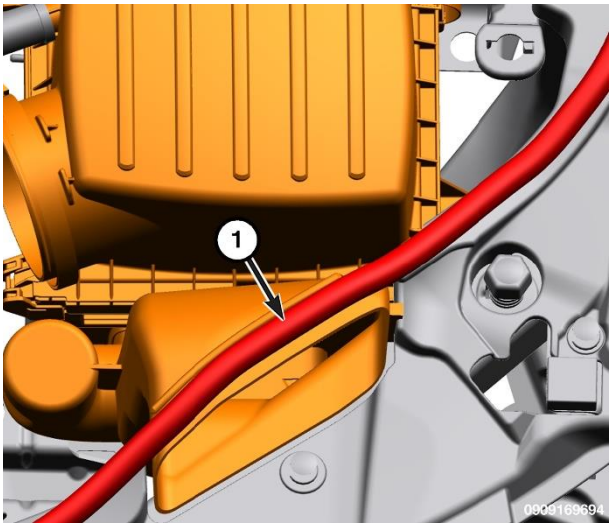

Figure 7 – Hood Seal

13. **If equipped**, disconnect the fresh air makeup hose (1) from the air cleaner body (Figure 8).

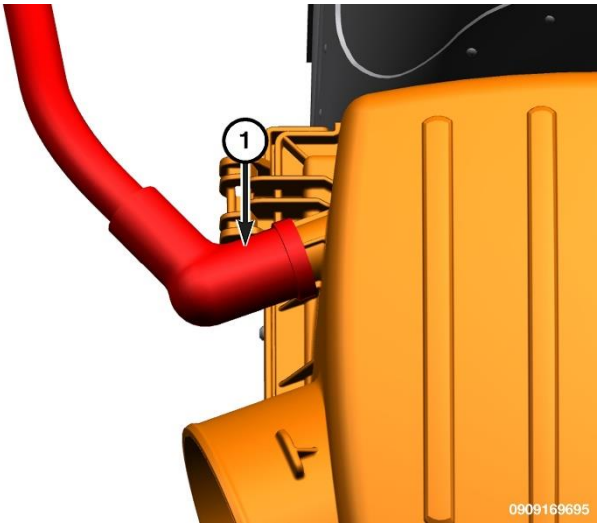

Figure 8 – Fresh Air Makeup Hose

<u>Installed</u> (HCU) Inspection Procedure [Continued]

14. Pull the air cleaner body (1) straight up off the locating pins (2) (Figure 9).

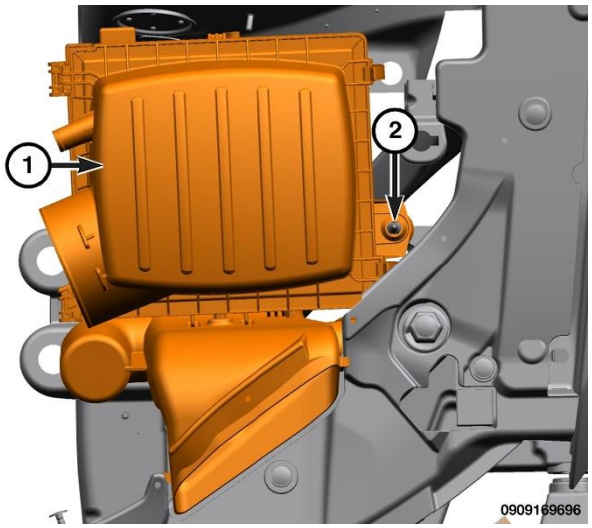

Figure 9 – Air Cleaner Body

15. Disconnect the wire harness connector (1) from the ABS module (2) (Figure 10).

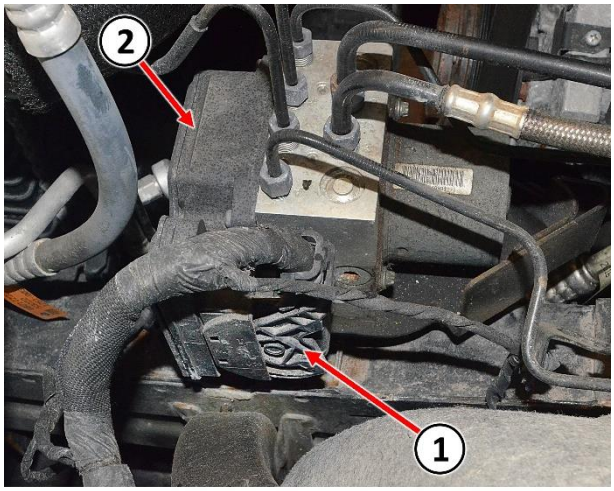

Figure 10 – Wire Harness Connector

<u>Installed</u> (HCU) Inspection Procedure [Continued]

16. Locate the pin stamp ID number on the HCU aluminum body (Figure 11).

17. Julian Date is the 3rd to 6th digits (Figure 11).

18. Suspect range **8166** to **9106** (Figure 11).

    - **If HCU is suspect:** Proceed to **Service Procedure Page 12** for HCU replacement.

    - **If HCU is NOT suspect:** Continue with **Inspection Procedure** for vehicle reassembly.

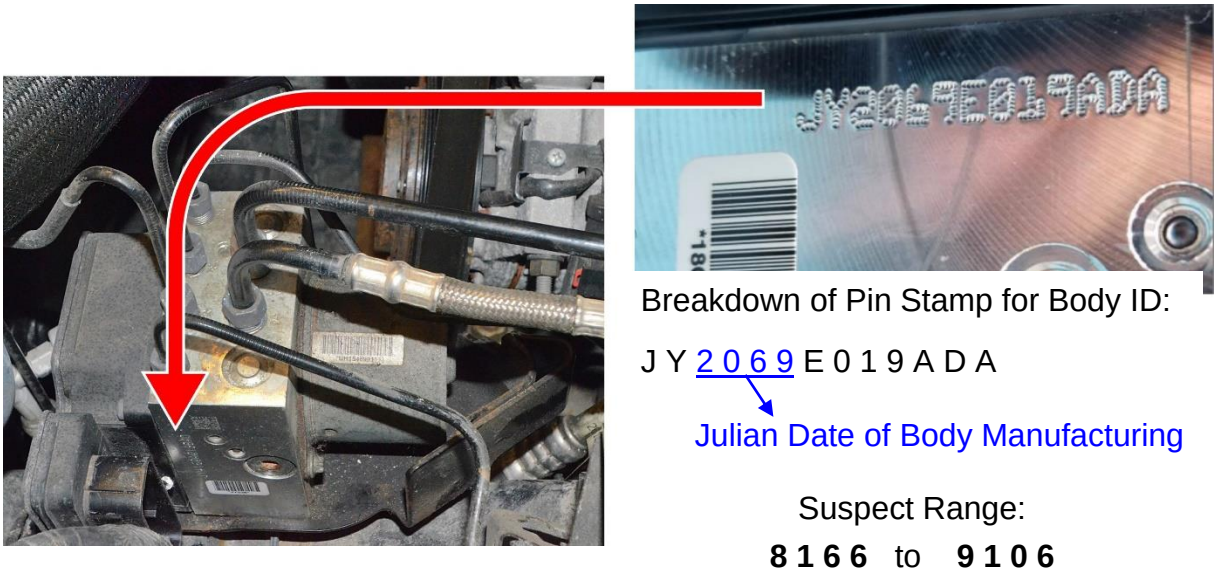

Figure 11 – Pin Stamp ID Number on the HCU Aluminum Body

<u>Installed</u> (HCU) Inspection Procedure [Continued]

19. Connect the wire harness connector (1) to the ABS module (2) (Figure 10).

20. Install the air cleaner body (1) straight down on the locating pins (2) (Figure 9).

21. **If equipped**, install the fresh air makeup hose (1) to the air cleaner body (Figure 8).

22. Install the hood seal (1) (Figure 7).

23. Install the inlet air tube or resonator assembly to the vehicle. Secure any rubber grommets or fasteners. Design may vary depending on engine and vehicle (Figure 6).

24. Inlet air tube or resonator. Securely tighten the clamp at the throttle body (1) and the clamp (2) at the air cleaner body (Figure 5).

25. **If equipped**, connect the wire harness connector (1) to the Mass Air Flow (MAF) sensor and secure the wire harness retainer (2) to the air cleaner resonator (Figure 4).

26. **If equipped**, connect the wire harness connector (1) to the Inlet Air Temperature (IAT) sensor and secure the wire harness retainer (2) to the air cleaner resonator (Figure 3).

27. **Install the engine cover**. Align the cover grommets to ball studs then gently push down until you feel the grommet and ball stud engage, ensuring grommet and ball stud retention. Lightly lift up around the edges of the engine cover to ensure that the cover is not loose and that all of the grommets are engaged. Some engine covers require oil filter access cover or additional fasteners to be installed. If unsure of the proper procedure to install the engine cover, please refer to Service Library for proper engine cover installation procedure.

<u>Installed</u> (HCU) Inspection Procedure [Continued]

28. Close the engine compartment hood.

29. Connect the negative battery cable 5 N·m (44 In. Lbs.) (Figure 2).

30. If equipped with an Intelligent Battery Sensor (IBS), connect the IBS connector (Figure 2).

31. Install the battery access cover located under the passenger front seat (Figure 2).

32. Return the vehicle to the customer or inventory.

Service Procedure

Replacement Procedure if Inspection Shows HCU to be Suspect:

1. Install a prop rod on the brake pedal to keep pressure on the brake system.

   NOTE: Holding the pedal in this position will isolate the master cylinder from the hydraulic brake system and will not allow brake fluid to drain out of the brake fluid reservoir while the brake lines are open. This will allow bleeding only the area of repair instead of the entire system.

2. Mark or take note of the hydraulic tube locations before removing to assist in proper installation.

3. Remove the primary and secondary brake hydraulic tubes (2) at the HCU (1) (Figure 12).

4. Remove the chassis hydraulic tubes (3) at the HCU (1) (Figure 12).

5. Remove ABS/HCU assembly with mounting bracket (1) from the vehicle by firmly lifting the assembly from the push mount pins (2) (Figure 13).

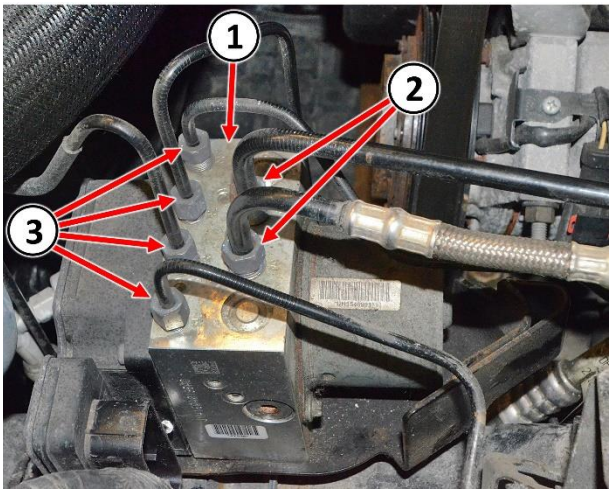

Figure 12 – HCU Hydraulic Tubes

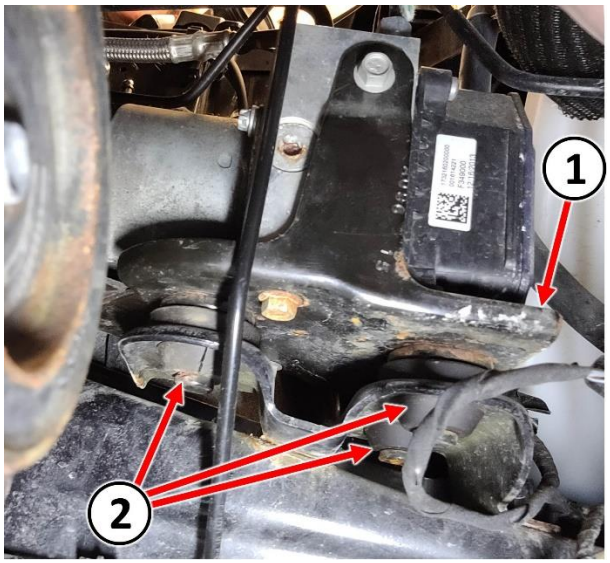

Figure 13 – ICU Mounting Bracket

Service Procedure [Continued]

CAUTION: When removing the ABS module from the HCU, be sure to completely separate the two components approximately 38 mm (1.5 in.) straight out before moving module to the side. Do not to touch the sensor terminals on the module side or the contact pads on the HCU side as this may result in contamination and issues in the future.

6. Remove and **DISCARD** the four ABS module screws (2) securing the module (1) to the HCU (Figure 14).

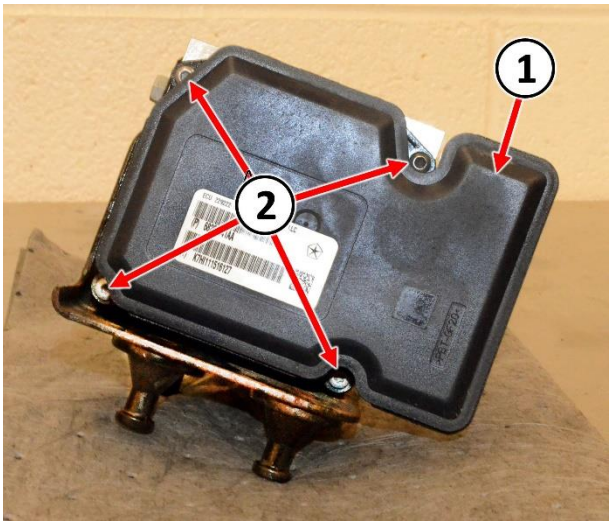

Figure 14 – ABS Module

7. Separate the ABS module (1) from the HCU (4) pulling the ABS module (1) straight out without touching the contact tower (2) terminals to any solenoids (Figure 15).

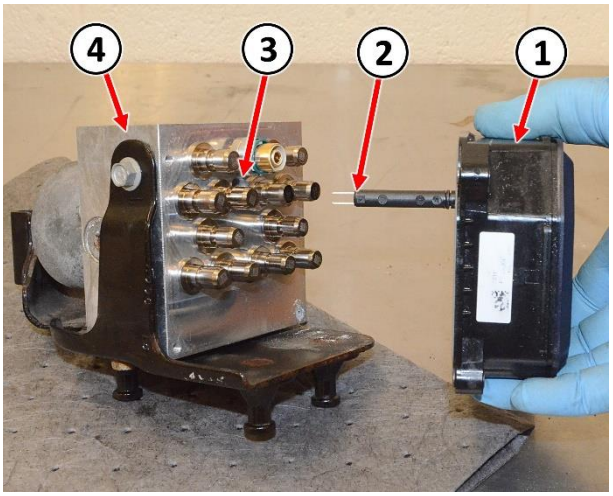

Figure 15 – ABS Module

Service Procedure [Continued]

8. Remove the three bolts (1) securing the HCU (2) to the mounting bracket (3) then separate and **DISCARD** the HCU (Figure 16).

9. Align the **NEW** HCU (2) to the mounting bracket (3) then install the three bolts (1). Tighten the bolts to 11 N·m (8 Ft. Lbs.) (Figure 16).

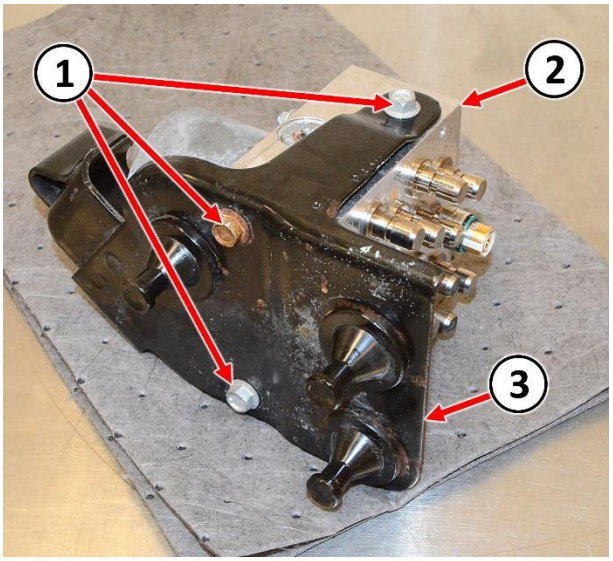

Figure 16 – HCU Mounting Bracket

CAUTION: When installing the ABS module to the HCU, be sure to properly align the ABS module and the HCU so that sensor terminals or the contact pads do not touch other parts of the modules. Otherwise, damage to the pressure sensor or Pump Motor connection may result requiring HCU replacement.

10. Align the ABS module contact tower (2) to the tower receiving hole (3) of the HCU (4) and put the ABS module (1) and the HCU (4) together without touching the tower terminals to any solenoids (Figure 15).

NOTE: Tighten the ABS module screws (2) in a crisscross pattern (Figure 14).

11. Install the four **NEW** ABS module screws (2) securing the module (1) to the HCU and tighten to 3 N·m (27 In. Lbs.) (Figure 14).

Service Procedure [Continued]

12. Install the ABS/HCU assembly with mounting bracket (1) to the vehicle by firmly pushing the assembly on the push mount pins (2) (Figure 13).

13. Install the chassis hydraulic tubes (3) to the HCU (1) and tighten the fittings to 21 N·m (15 Ft. Lbs.) (Figure 12).

14. Install the primary and secondary brake hydraulic tubes (2) to the HCU (1) and tighten the fittings to 35 N·m (26 Ft. Lbs.) (Figure 12).

15. Connect the wire harness connector (1) to the ABS module (2) (Figure 10).

16. Install the air cleaner body (1) straight down on the locating pins (2) (Figure 9).

17. **If equipped**, install the fresh air makeup hose (1) to the air cleaner body (Figure 8).

18. Install the hood seal (1) (Figure 7).

19. Install the inlet air tube or resonator assembly to the vehicle. Secure any rubber grommets or fasteners. Design may vary depending on engine and vehicle (Figure 6).

20. Inlet air tube or resonator. Securely tighten the clamp at the throttle body (1) and the clamp (2) at the air cleaner body (Figure 5).

21. **If equipped**, connect the wire harness connector (1) to the Mass Air Flow (MAF) sensor and secure the wire harness retainer (2) to the air cleaner resonator (Figure 4).

22. **If equipped**, connect the wire harness connector (1) to the Inlet Air Temperature (IAT) sensor and secure the wire harness retainer (2) to the air cleaner resonator (Figure 3).

Service Procedure [Continued]

23. **Install the engine cover**. Align the cover grommets to ball studs then gently push down until you feel the grommet and ball stud engage, ensuring grommet and ball stud retention. Lightly lift up around the edges of the engine cover to ensure that the cover is not loose and that all of the grommets are engaged. Some engine covers require oil filter access cover or additional fasteners to be installed. If unsure of the proper procedure to install the engine cover, please refer to Service Library for proper engine cover installation procedure.

24. Connect the negative battery cable 5 N·m (44 In. Lbs.) (Figure 2).

25. If equipped with an Intelligent Battery Sensor (IBS), connect the IBS connector (Figure 2).

26. Install the battery access cover located under the passenger front seat (Figure 2).

27. Remove the brake pedal prop rod.

    NOTE: Use Mopar® brake fluid, or an equivalent quality fluid meeting SAE J1703-F and DOT 3 standards only. Use ONLY fresh, clean fluid from a sealed container.

28. Remove master cylinder reservoir filler cap and fill reservoir with brake fluid prior to connecting pressure bleeder.

29. Install MASTER CYLINDER CAP 6921 or equivalent to the master cylinder reservoir.

Service Procedure [Continued]

30. Fill the bleeder tank with recommended fluid and purge air from the tank lines before bleeding.

    NOTE: Follow the manufacturer's instructions carefully when using pressure equipment. Do not exceed the tank manufacturers pressure recommendations. Generally, a tank pressure of 51-67 kPa (15-20 psi) is sufficient for bleeding. Do not pressure bleed without a proper master cylinder adapter. The wrong adapter can lead to leakage or drawing air back into the system.

31. Partly raise the vehicle.

32. Connect the pressure bleeder to the master cylinder using adapter provided with the equipment or MASTER CYLINDER CAP 6921.

    NOTE: When pressure bleeding, a helper is needed inside the vehicle.

    NOTE: Bleed only one brake component at a time beginning with the rear brake caliper furthest from the master cylinder, then the other rear caliper, followed by the furthest front caliper from the master cylinder and finishing with the closest to the master cylinder as follows:

33. Attach one end of the bleed hose (1) to the bleed screw and insert the opposite end into a glass container (2) partially filled with brake fluid. Be sure the end of the bleed hose is immersed in fluid (Figure 17).

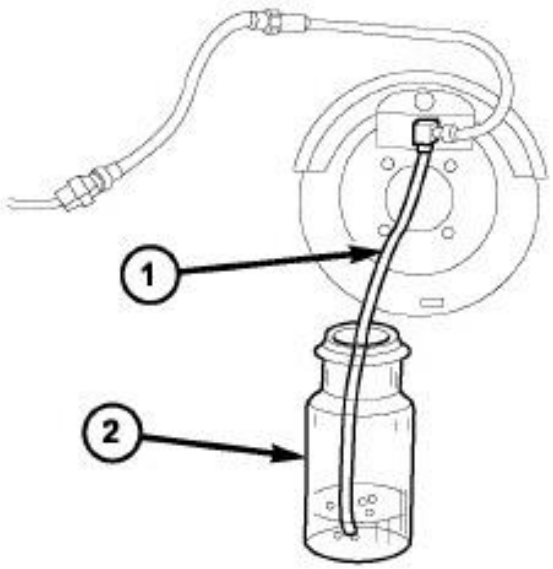

Figure 17 – Bleed Hose Immersed in Container of Brake Fluid

Service Procedure [Continued]

34. Open the bleeder and have the helper pump the brake pedal multiple times, until the fluid stream is clear and free of air bubbles, then with the brake pedal pushed, tighten the bleeder screw.

35. Repeat the bleeding procedure at each wheel until all are complete.

36. Remove the bleeder hose, and the pressure bleeder from the master cylinder.

    NOTE: The wiTECH scan tool must be used to perform this recall. The wiTECH software is required to be at the latest release level before performing this procedure.

37. Open the hood. Install a battery charger and verify that the charging rate provides 13.0 to 13.5 volts. Do not allow the charger to time out during the flash process. Set the battery charger timer (if so equipped) to continuous charge.

    NOTE: Use an accurate stand-alone voltmeter. The battery charger volt meter may not be sufficiently accurate. Voltages outside of the specified range will cause an unsuccessful wiTECH operation. If voltage reading is too high, apply an electrical load by activating the park or headlamps and/or HVAC blower motor to lower the voltage.

38. Connect the wiTECH micro pod II to the vehicle data link connector.

39. Place the ignition in the "**RUN**" position.

40. Open the wiTECH 2.0 website.

41. Enter your "**User id**" and "**Password**" and your "**Dealer Code**", then select "**Sign In**" at the bottom of the screen. Click "**Accept**".

42. From the "**Vehicle Selection**" screen, select the applicable vehicle.

Service Procedure [Continued]

43. Select "**ANTILOCK BRAKES**", followed by "**MISCELLANEOUS**", then "**ABS BLEED BRAKES**" and follow the instructions displayed for the procedure.

44. Click "**View DTCs**", select "**Clear All DTCs**", click "**Continue**" and then click "**Close**".

45. Place the ignition in the "**OFF**" position and then remove the wiTECH micro pod II device from the vehicle.

46. Remove the battery charger from the vehicle.

47. Remove the pressure bleeder from the master cylinder reservoir.

48. Top off the brake fluid and install the master cylinder reservoir cap.

49. Clean any excess brake fluid from vehicle.

50. Close the hood.

51. Verify proper brake operation before moving the vehicle.

52. Lower the vehicle.

53. Return the vehicle to the customer or inventory.

Completion Reporting and Reimbursement

Claims for vehicles that have been serviced must be submitted on the DealerCONNECT Claim Entry Screen located on the Service tab. Claims paid will be used by FCA to record recall service completions and provide dealer payments.

Use the following labor operation numbers and time allowances:

	Labor Operation Number	Time Allowance
Uninstalled HCU, Inspect Julian Build Date (Over the counter inspection of uninstalled HCU.)	05-21-A1-80	0.0 hours
Installed HCU, Inspect Julian Build Date (On vehicle inspection of installed HCU.)	05-21-A1-81	0.3 hours
Inspect and Replace Suspect HCU on Vehicle	05-21-A1-82	1.4 hours

Related Operation

Dealership Handling Fee for HCU Repurchase (Uninstalled HCU)	95-05-40-50	[redacted]

Add the cost of the recall parts package plus applicable dealer allowance to your claim.

In addition, enter "MATL" in the Part Number section of your claim with the applicable Material Allowance where appropriate.

NOTE: See the Warranty Administration Manual, Recall Claim Processing Section, for complete recall claim processing instructions.

Dealer Notification

To view this notification on DealerCONNECT, select "Global Recall System" on the Service tab, then click on the description of this notification.

Owner Notification and Service Scheduling

All involved vehicle owners known to FCA are being notified of the service requirement by first class mail. They are requested to schedule appointments for this service with their dealers. A generic copy of the owner letter is attached.

Vehicle Lists, Global Recall System, VIP and Dealer Follow Up

All involved vehicles have been entered into the DealerCONNECT Global Recall System (GRS) and Vehicle Information Plus (VIP) for dealer inquiry as needed.

GRS provides involved dealers with an updated VIN list of their incomplete vehicles. The owner's name, address and phone number are listed if known. Completed vehicles are removed from GRS within several days of repair claim submission.

To use this system, click on the **"Service"** tab and then click on **"Global Recall System."** Your dealer's VIN list for each recall displayed can be sorted by: those vehicles that were unsold at recall launch, those with a phone number, city, zip code, or VIN sequence.

Dealers must perform this repair on all unsold vehicles *before* retail delivery. Dealers should also use the VIN list to follow up with all owners to schedule appointments for this repair.

Recall VIN lists may contain confidential, restricted owner name and address information that was obtained from the Department of Motor Vehicles of various states. Use of this information is permitted for this recall only and is strictly prohibited from all other use.

Additional Information

If you have any questions or need assistance in completing this action, please contact your Service and Parts District Manager.

Customer Services / Field Operations
FCA US LLC

21A/NHTSA 23E-019

YOUR SCHEDULING OPTIONS

1. **RECOMMENDED OPTION**
   Call your authorized Chrysler / Dodge / Jeep® / RAM Dealership

2. **Call the FCA Recall Assistance Center at 1-800-853-1403. An agent can confirm part availability and help schedule an appointment**

3. **Visit recalls.mopar.com or download the Mopar Owner's Companion App.**

Get access to recall notifications, locate your nearest dealer, and more through this website or Mopar Owner's Companion App. You will be asked to provide your Vehicle Identification Number (VIN) to protect and verify your identity.

DEALERSHIP INSTRUCTIONS

Please reference Safety Recall 21A.

IMPORTANT SAFETY RECALL

Anti-lock Brake System Hydraulic Control Unit

Dear [Name],

This notice is sent to you in accordance with the National Traffic and Motor Vehicle Safety Act.

FCA has decided that a defect, which relates to motor vehicle safety, exists in certain Anti-lock Brake System (ABS) Hydraulic Control Units (HCU)s part number 68085397AB intended for use on some 2011 - 2022 model year Jeep Grand Cherokee and 2011 - 2020 model year Dodge Durango vehicles.

It is extremely important to take steps now to repair your vehicle to ensure the safety of you and your passengers.

WHY DOES MY VEHICLE NEED REPAIRS?

FCA US records indicate that you may have purchased an HCU service part for your vehicle [1]. When installed in a vehicle, an HCU / ABS module may falsely read pressure in the primary circuit which may illuminate the brake lights, as well as allow the vehicle to start and shift out of park without the brake pedal being depressed. **This condition can cause unintended vehicle movement which can cause a vehicle crash without prior warning and/or injury to others outside the vehicle.**

HOW DO I RESOLVE THIS IMPORTANT SAFETY ISSUE?

FCA US will repurchase suspect HCUs. If installed on a vehicle, FCA US will replace the HCU [2] free of charge (parts and labor). To do this, your dealer will inspect the Julian date code of HCU manufacturing and repurchase suspect HCUs. If installed on a vehicle your dealer will replace the suspect HCU. The estimated repair time for on vehicle inspection/replacement of the HCU may take up to one and a half hours. In addition, your dealer will require your vehicle for proper check-in, preparation, and check-out during your visit, which may require more time. We recommend that you schedule a service appointment to minimize your inconvenience. Please bring this letter and your HCU if uninstalled or vehicle if HCU is installed with you to your dealership.

TO SCHEDULE YOUR FREE REPAIR,
CALL YOUR CHRYSLER, DODGE, JEEP OR RAM DEALER TODAY

WHAT IF I ALREADY PAID TO HAVE THIS REPAIR COMPLETED?

If you have already experienced this specific condition and have paid to have it repaired, you may visit **www.fcarecallreimbursement.com** to submit your reimbursement request online. [3] Once we receive and verify the required documents, reimbursement will be sent to you within 60 days. If you have had previous repairs performed and/or already received reimbursement, you may still need to have the recall repair performed.

We apologize for any inconvenience, but are sincerely concerned about your safety. Thank you for your attention to this important matter.

Customer Assistance/Field Operations
FCA US LLC

FIAT CHRYSLER AUTOMOBILES

Mr. Mrs. Customer
1234 Main Street
Hometown, MI 48371

[1] If you no longer own this vehicle, please help us update our records. Call the FCA Recall Assistance Center at 1-800-853-1403 to update your information.

[2] If your dealer fails or is unable to remedy this defect without charge and within a reasonable time, you may submit a written complaint to the Administrator, National Highway Traffic Safety Administration, 1200 New Jersey Ave., S.E., Washington, DC 20590, or you can call the toll-free Vehicle Safety Hotline at 1-888-327-4236 (TTY 1-800-424-9153), or go to safercar.gov.

[3] You can also mail in your original receipts and proof of payment to the following address for reimbursement consideration: FCA Customer Assistance, P.O. Box 21-8004, Auburn Hills, MI 48321-8007, Attention: Recall Reimbursement.

Note to lessors receiving this recall notice: Federal regulation requires that you forward this recall notice to the lessee within 10 days.