Emer PRD Replacement for Gillig CNG Fuel Systems with Type 4 Cylinders and Electric Solenoid Cylinder Valves

ENP-740 REV A

August 5, 2020

Copyright ©2020. Agility Fuel Solutions. All Rights Reserved

1. Introduction

Agility Fuel Solutions (Agility®) has determined that pressure relief devices (PRDs) manufactured by Emer™ may fail to operate as designed. This issue has been reported to the National Highway Traffic and Safety Administration (NHSTSA Recall No. 20E-019). Impacted parts include Emer™ p/n PRD2302T-004 (Agility® p/n 10306997) and Emer™ cylinder valve PRD, p/n PRD2102T (no equivalent Agility® p/n) used in Agility® compressed natural gas (CNG) fuel systems produced from October 6, 2016, to April 1, 2020.

PRDs are essential for safe vehicle operation and must be replaced if non-compliant. Agility® personnel have identified fuel system top level part numbers supplied for Gillig buses containing recalled Emer™ PRDs as original equipment manufacturer (OEM) equipment.

Agility® has engineered two retrofit kits for fuel systems equipped with Type 4 cylinders and manual cylinder valves to replace recalled Emer™ PRDs. The two retrofit kits replace 85-in. and 120-in. fuel system plumbing with PRDs manufactured by VTI and new PRD supply and vent tubes. Agility is also supplying Emer™ cylinder valve PRD, p/n PRD2102T (no equivalent Agility® p/n) for cylinder valve direct replacement.

Agility® created this instructional document to guide trained CNG fuel system service technicians in the removal, replacement, and reporting of affected Emer™ PRDs.

1.1. Warning Messages and Symbols used in this document

⚠ DANGER

Will cause death or severe injuries if procedures are not followed.

⚠ WARNING

Could cause death or severe injuries if procedures are not followed.

⚠ CAUTION

Could cause minor or moderate injuries if procedures are not followed.

NOTICE

Practices not related to physical injury. Includes procedures to prevent vehicle damage as well as hints to help an operation or procedure go smoothly.

Critical Characteristic

Procedure directly affects safety of vehicle users, people nearby and maintenance personnel, or regulatory compliance.

Manufacturing Characteristic

- *A product feature solely used to improve manufacturability or maintain process control ·*
- *A process parameter or step that has a significant effect on achieving a Critical Characteristic or Significant Characteristic, or maintaining material identification/traceability.*

DRAFT

2. Affected Units

Agility® top level system part numbers as follows:

25519000 - Roof Mount, 155 DGE, 2084 L, 8 Tanks, 3 Pin Harness, Gillig, Type 4
25521000 - Roof Mount, 185 DGE, 2468 L, 8 Tanks, Type 4, 3 Pin Harness, Gillig

3. Tools and Supplies Required

Fall protection equipment	Safety glasses
Safety ladder	Defueling hose with nozzle**
NGV1 fuel receptacle adapter*	Microfiber towels
Water pump plier or Vise-Grip® locking plier or equivalent	Socket and combination wrenches
	Torque wrench†
Loctite® 276 thread sealer	Loctite® 577 thread sealer
Parker® O-lube O-ring lubricant or equivalent	Swagelok® Snoop® leak detection solution or equivalent
Torque Seal marker	Agility® reporting form FT.0323
Permanent marker	Flashlight
Blue paint marker	Camera / phone camera
Zip lock bag *(Supplied by Agility® with bulk replacement PRD shipment—use for PRD return)*	15/16-in. angled open end wrench (Tekton® p/n WAE83024 or equivalent) OR Modified 1/2-in. drive 24mm deep socket and 1/2-in. drive ratchet†

**may be required for defueling on some FMMs*

***If not provided at CNG fueling facility*

†If modified 24mm socket is unavailable, a 15/16-in. crow foot must be used with torque wrench.

3.1. PRD retrofit kits

NOTICE

Before beginning work, verify proper quantity of the appropriate Agility® PRD retrofit kit is on hand.

Agility® fuel system part numbers and corresponding retrofit kit part numbers are as follows:

Agility® Fuel system p/n	QTY required Kit, Retrofit, Gillig, 120" tanks PRD Retrofit, Agility® p/n 25519031	QTY required Kit, Retrofit, Gillig, 85" tanks PRD Retrofit, Agility® p/n 25519030	QTY required Valve PRD, Emer™ p/n PRD2102T
25519000	1	1	8
25521000	2	n/a	8

Verify proper parts and quantities according to the following content lists and drawings:

Kit contents: Kit, Retrofit, Gillig, 120" tanks PRD Retrofit, p/n 25519031. *Figure 1*			
Item	**p/n**	**Description**	**QTY**
1	10200065	Fitting, Tube, Connector, 1/2-in. Tube OD, 9/16-18 Male SAE, SS	2
2	10200208	Fitting, Tube, Tee, 1/2-in. Tube OD, 1/2-in. Tube OD, 1/2-in. Tube OD, SS	2
3	10200238	Fitting, Tube, Adapter, 1/2-in. Tube OD, 9/16-18 Male SAE, SS	2
4	10200563	Fitting, JIC, Straight, -8 Male JIC, 1/2-20 Male SAE, Steel	4
5	10300513	T-PRD, VTI, Remote, PRD 1	4
6	10701508	Tube Clamp Kit, 1/2-in., Double Mounting Hole, -40F to 212F	6
7	10702147	P-Clip, 1/2-in., Rubber Clamp	2
8	25519028	Tube Subassembly, 25519420, PRD to Vent	1
9	25519029	Tube Subassembly, 25519421, PRD To Vent	1
10	25519037	Tube Subassembly, 25519429, PRD to Vent	1
11	25519038	Tube Subassembly, 25519430, PRD To Vent	1
12	25519123	Bracket, tube clamp	2
13	25519416	Tube, Formed, HP Fuel, 1/2-in. X .049-in., Tee to PRD	2
14*	25519039	Hardware, Retrofit Kit	1
15	10602157	Decal, System, Danger Live High Pressure PRD Line	4
16	10602442	Decal, PRD Vent Line, Caution	8

**Not shown*

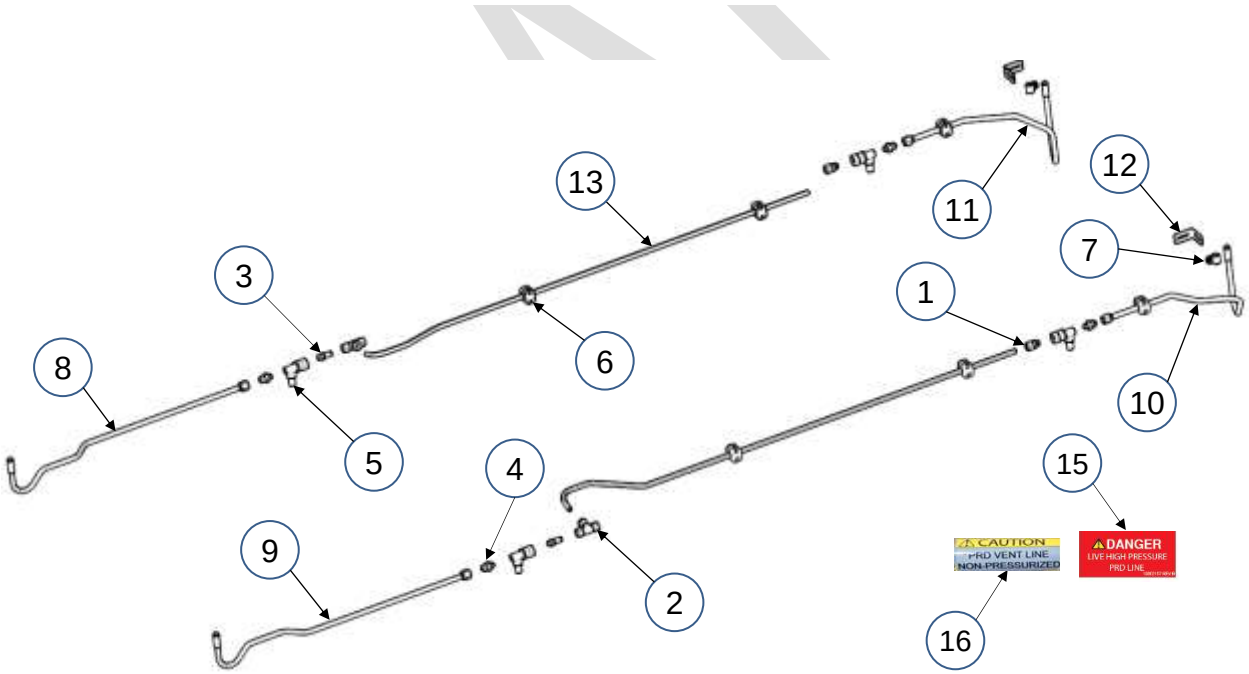

Figure 1.
Kit, Retrofit, Gillig, 120" tanks PRD Retrofit, p/n 25519031.

Kit contents: Kit, Retrofit, Gillig, 85" tanks PRD Retrofit, p/n 25519030. *Figure 2*			
Item	**p/n**	**Description**	**QTY**
1	10200065	Fitting, Tube, Connector, 1/2-in. Tube OD, 9/16-18 Male SAE, SS	2
2	10200208	Fitting, Tube, Tee, 1/2-in. Tube OD, 1/2-in. Tube OD, 1/2-in. Tube OD, SS	2
3	10200238	Fitting, Tube, Adapter, 1/2-in. Tube OD, 9/16-18 Male SAE, SS	2
4	10200563	Fitting, JIC, Straight, -8 Male JIC, 1/2-20 Male SAE, Steel	4
5	10300513	T-PRD, VTI, Remote, PRD 1	4
6	10701508	Tube Clamp Kit, 1/2-in., Double Mounting Hole, -40F to 212F	6
7	10702147	P-Clip, 1/2-in., Rubber Clamp	2
8	25519026	Tube Subassembly, 25519414, PRD to Vent	1
9	25519027	Tube Subassembly, 25519415, PRD To Vent	1
10	25519037	Tube Subassembly, 25519429, PRD to Vent	1
11	25519038	Tube Subassembly, 25519430, PRD To Vent	1
12	25519123	Bracket, tube clamp	4
13	25519417	Tube, Formed, HP Fuel, 1/2-in. X .049-in., Tee to PRD	2
14*	25519039	Hardware, Retrofit Kit	1
15	10602157	Decal, System, Danger Live High Pressure PRD Line	4
16	10602442	Decal, PRD Vent Line, Caution	8

**Not shown*

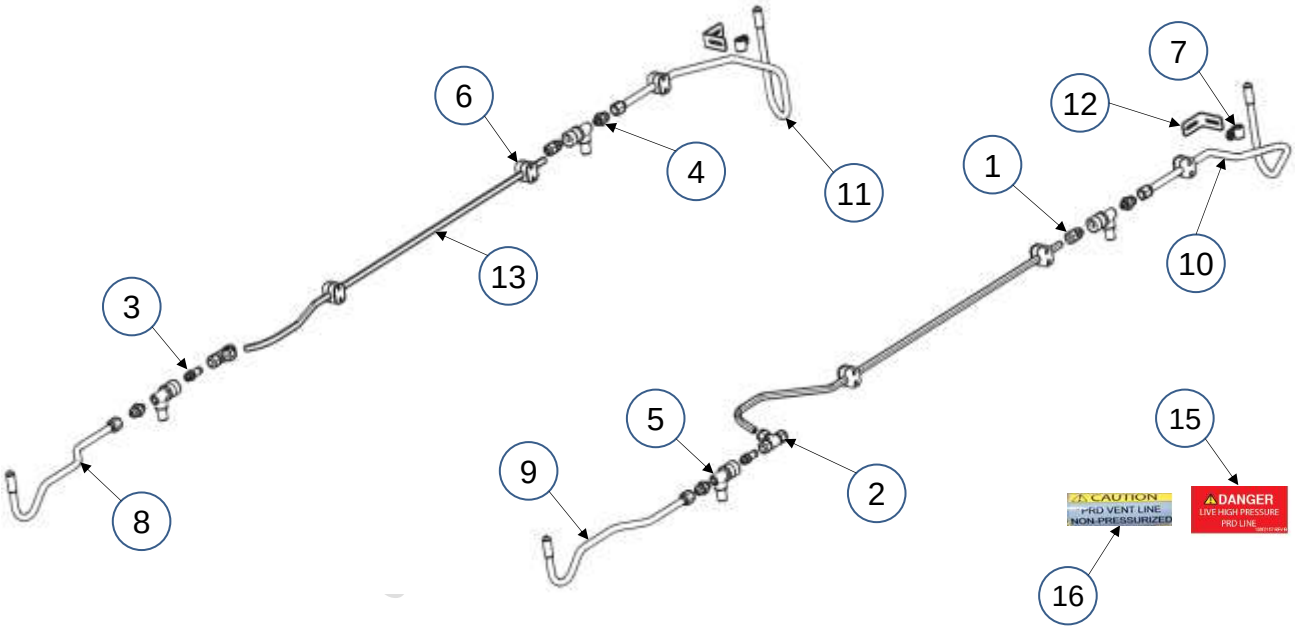

Figure 2.
Kit, Retrofit, Gillig, 85" tanks PRD Retrofit, p/n 25519030

4. Parts Location Identification

Refer to the appropriate fuel system illustration to locate the affected Emer™ PRDs in fuel system plumbing for 85-in. and 120-in. cylinders. *Figures 3, 4 and 5*

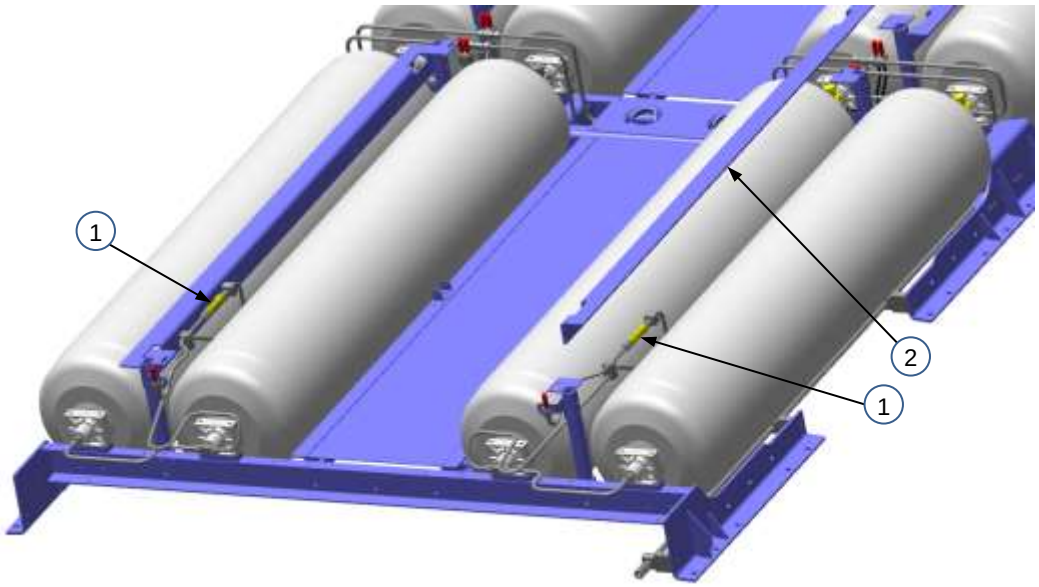

Figure 3.
Locations of Emer™ remote PRDs (1) in 85-in. cylinder fuel system plumbing. NOTE: PRD bracket (2) elevated for clarity.

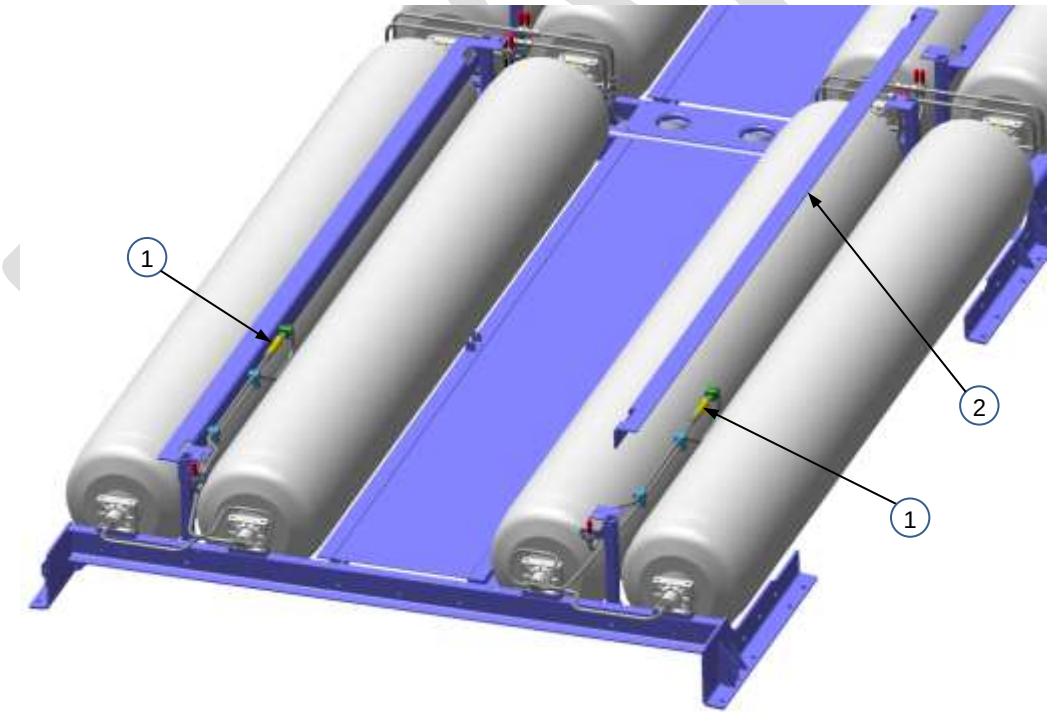

Figure 4.
Locations of Emer™ remote PRDs (1) in 120-in. cylinder fuel system plumbing. NOTE: PRD bracket (2) elevated for clarity

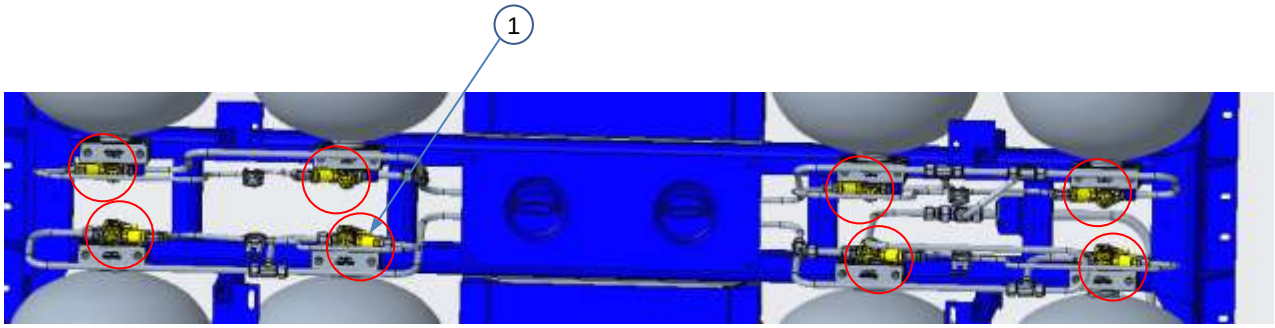

Figure 5.

Locations of Emer™ valve end PRDs (3).

DRAFT

5. Corrective Action / Procedure

5.1. Preliminary Safety Preparation

1			2		
WHAT	⚠WARNING Set parking brake and secure vehicle with wheel chocks *(not shown)*.		WHAT	⚠WARNING Attach a lock and tag *(not shown)* to block vehicle ignition.	
WHY	Worker safety.		WHY	Prevent vehicle start during repair procedure.	
3					
WHAT	⚠WARNING Secure a safety ladder in either of the following locations: A. Inside bus hatch opening B. Rear of bus exterior				
WHY	Worker safety.				

DRAFT

4	1. Open fuel system roof pod doors (d). **⚠WARNING** 2. Secure fall protection equipment to facility fall restraint equipment *(not shown).* If no fall restraint is present at the facility, secure fall protection equipment *(not shown)* to fall restraint lanyard attachment points (2). **⚠WARNING** 3. Secure doors open with door retention strap (e). *Refer to vehicle OEM instructions.* **⚠WARNING** ***Always reattach fall PPE when resuming work on the roof mount portion of the fuel system.***	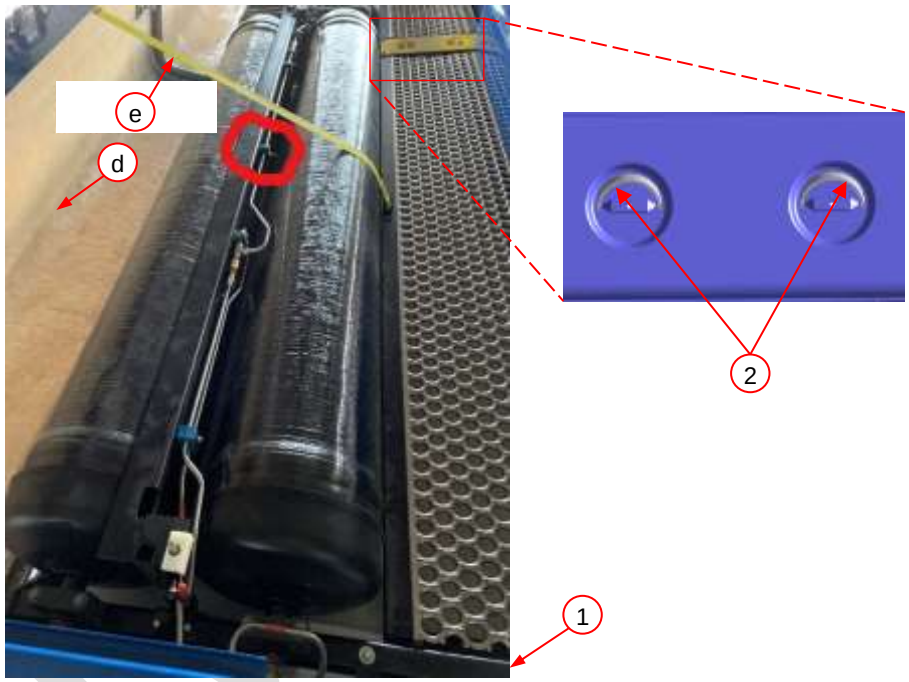
WHAT		
WHY	Fall safety.	

DRAFT

5.2. Prior to defueling

1	**⚠WARNING**	
WHAT	Verify all eight cylinder valves *(circled)* are open.	
WHY	Ensure cylinders can be properly defueled.	
2	1. Check high pressure gauge (3) on fuel management module (FMM) (4) to verify amount of fuel in the system. 2. Verify FMM (4) 1/4-turn manual shut off valve (5) is in the OPEN position. **IMPORTANT:** If vehicle has no fuel onboard, proceed to Step 4.	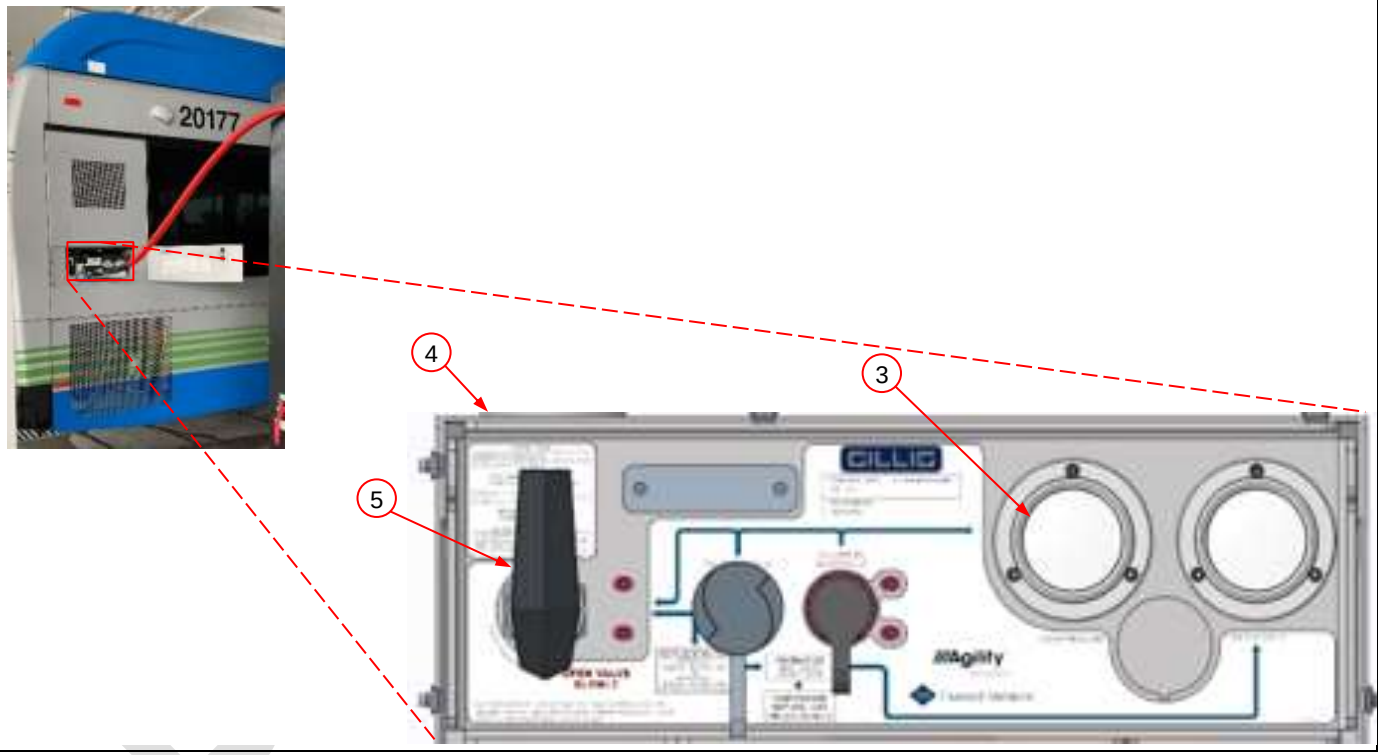
WHAT		
WHY		

3	*If not already defueled:* Defuel bus according to Agility publication ENP-729. **WARNING** ***Always follow local facility regulations and procedure for defueling.*** *If required:* use defuel hose kit. **WARNING** ***Only trained CNG fuel systems technicians may perform system defueling.*** **NOTICE** *If required:* Use appropriate defuel nozzle adapter.		4	**WARNING** Relieve any remaining system pressure by slowly opening the FMM (4) bleed valve (b).	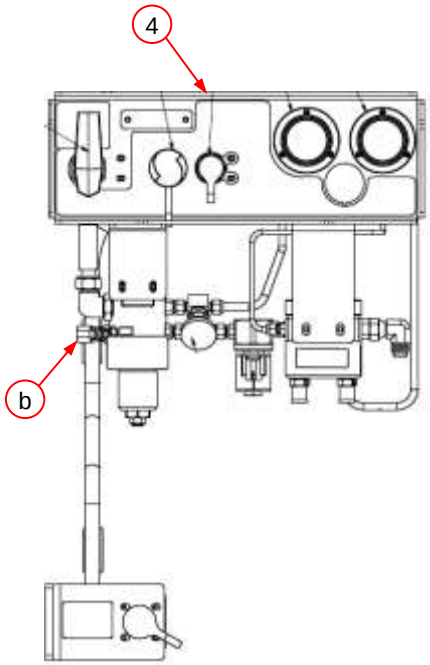
WHY	PRD supply tubes to be removed are pressurized "live" lines.		WHY		

DRAFT

5.3.1. Mark Emer™ valve end PRDs, Emer™ p/n PRD2102T

1	
WHAT	A. Use a microfiber towel and water to clean solenoid cylinder valve (3) and valve PRD (1) surfaces. B. Dry the solenoid cylinder valve (3) and valve PRD (1). c C. *When the PRD is clean and dry:* Use a permanent marker or paint marker to legibly write the serial number (a) and batch number (b) from the solenoid cylinder valve (3) on the valve PRD (1) as indicated by the example *(circled).*
WHY	Recall reporting mandates recording serial number and batch number data.

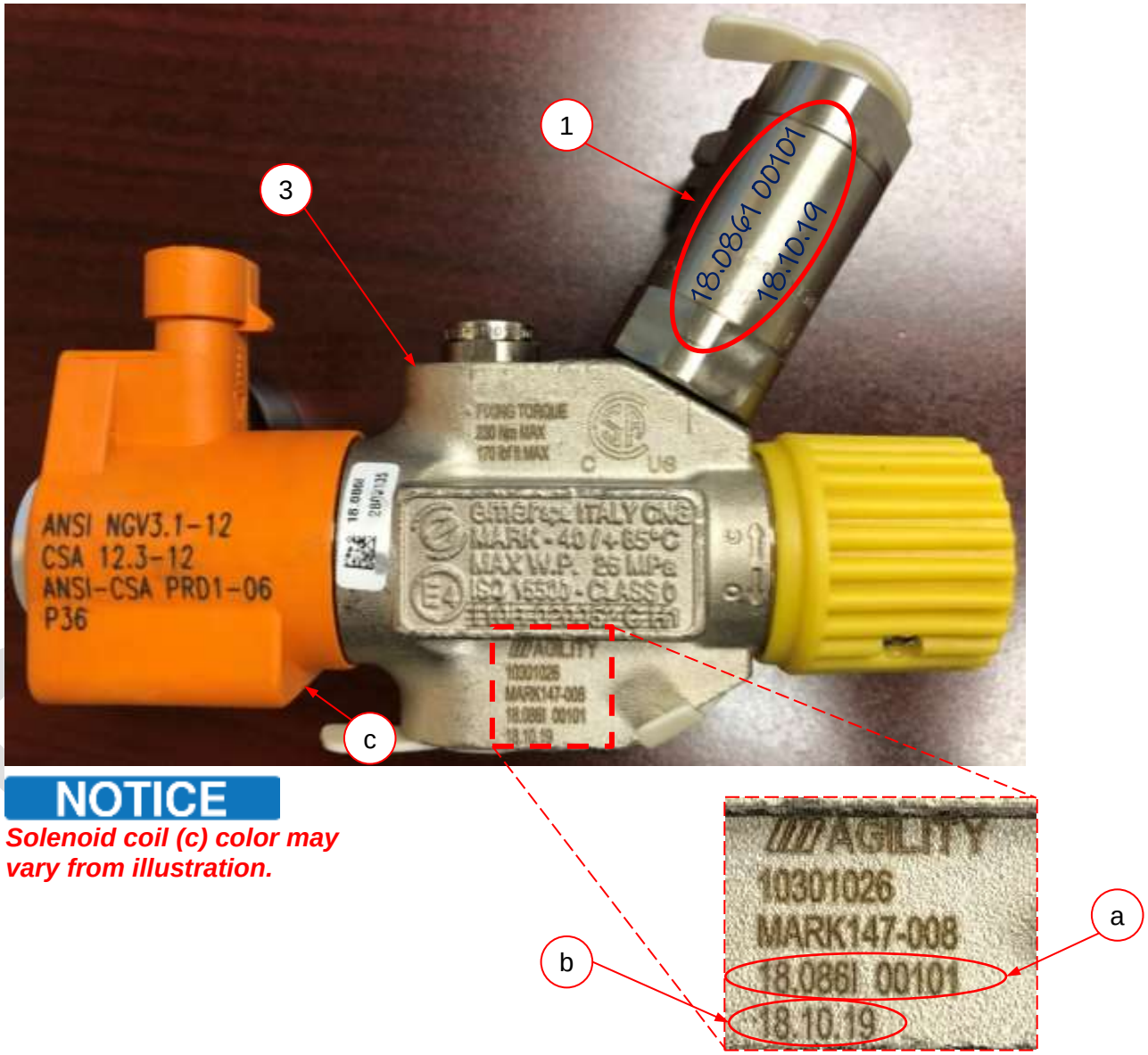

NOTICE

Solenoid coil (c) color may vary from illustration.

2	c Use form FT.0323 (d) to record the following data for each Emer™ valve PRD (1): Serial number (a) Batch number (b)	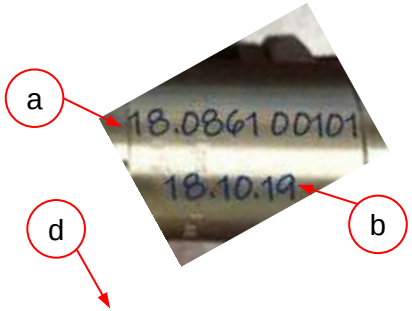 d 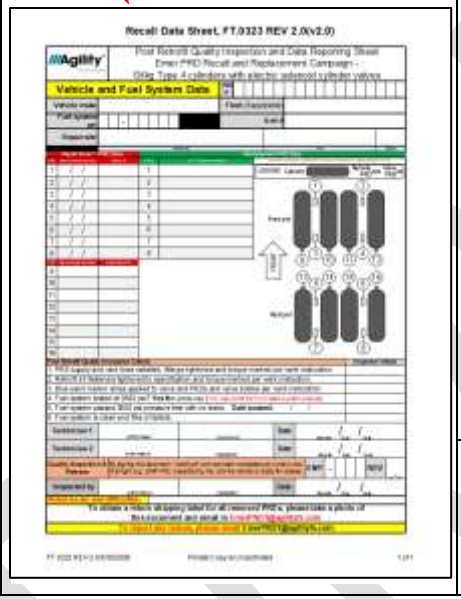	3	Repeat Steps 1 and 2 until all valve PRDs have been marked.	
WHY	Required for retrofit kit component and repair tracking and, if applicable, installer reimbursement.		WHY		

DRAFT

5.3.2. Remove and replace Emer™ valve end PRDs, Emer™ p/n PRD2102T

⚠WARNING

Refer to Appendix C: "OEM Emer Instruction PRD Manual to Replace the PRD" (below) for installation details.

NOTICE

Always perform installation steps in the order specified.

1	A. Use a wrench to loosen dual tube clamp (8) fasteners *(not visible)* to aid in moving PRD vent tube (6) aside but do not remove. B. Use a pair of wrenches to disconnect PRD vent tube (6) nut fitting (a) from PRD (1) elbow fitting (7). **NOTICE** ***Avoid damage to pressure transducer (d) and high pressure fuel tube (e).***	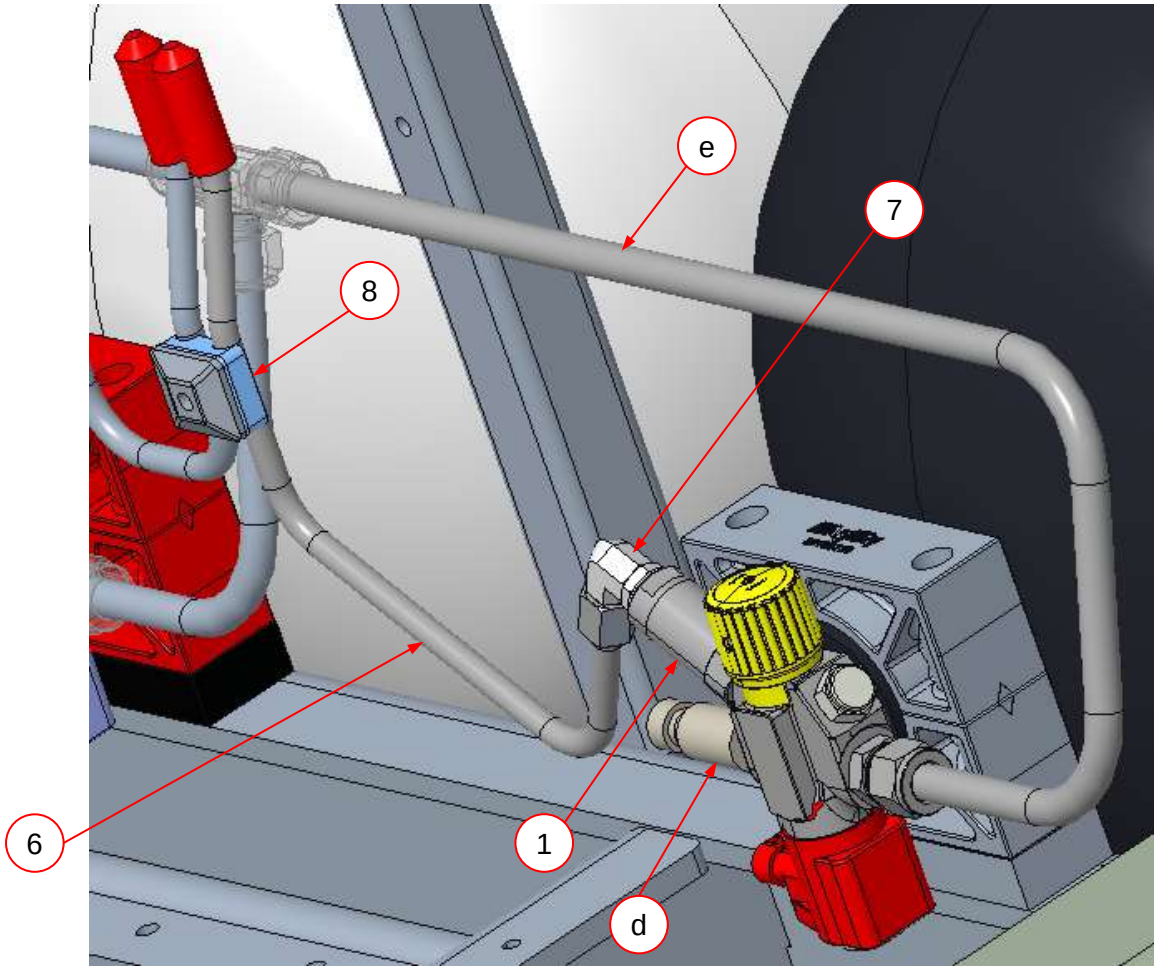
WHAT		
WHY		

3	Use a wrench to loosen jamb nut (b) of elbow fitting (7) while holding PRD (1) with another wrench at PRD flats (a).	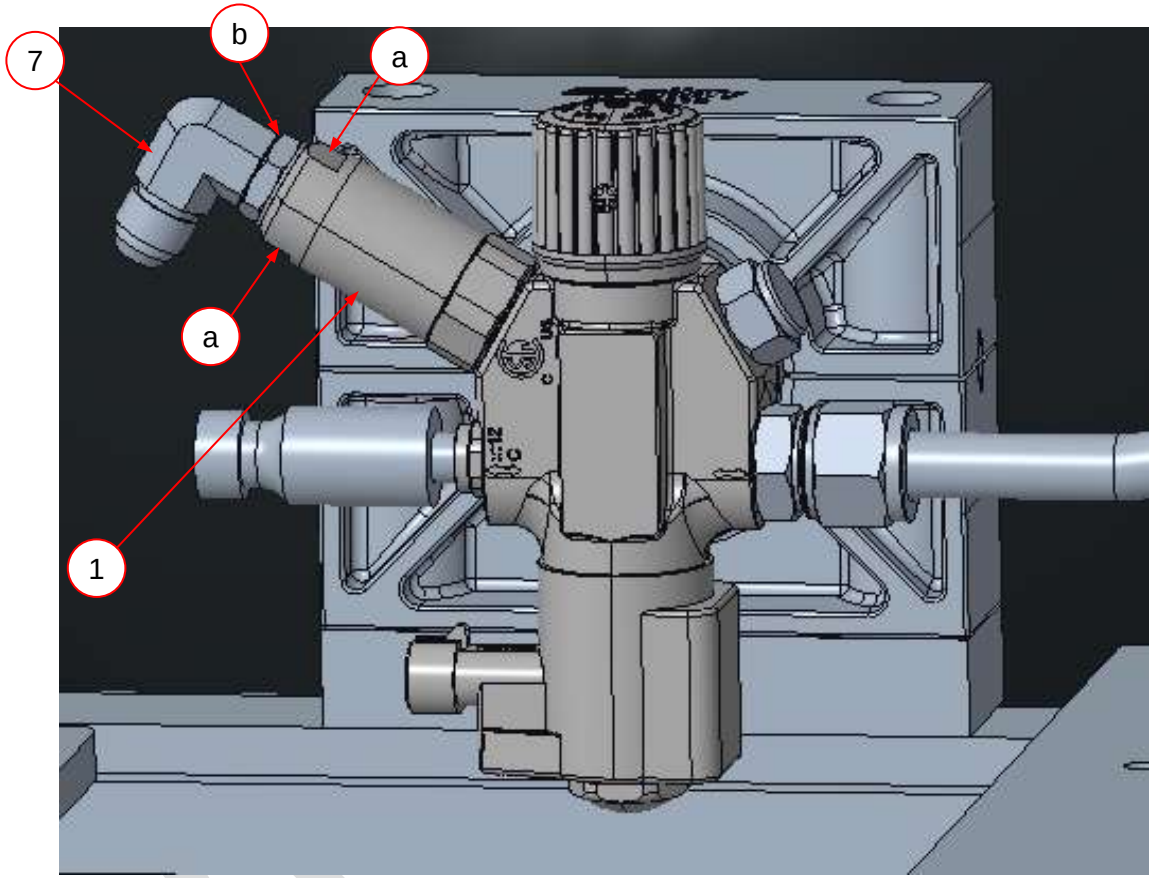
WHAT		
WHY		

4	**NOTICE** ***Remove and replace one PRD at a time to avoid system contamination.*** 1.Use a 15/16-in. angled open end wrench (Tekton® p/n WAE83024) (a) OR a modified 1/2-in. drive 24mm deep socket (b) and ratchet to remove PRD (1) from valve (3). **NOTICE** ***Avoid contact with pressure transducer (d).*** 2.Place PRD (1) removed in a zip lock bag. **NOTICE** ***Place only PRDs from one vehicle in each zip lock bag.*** ***Bag must be labeled with the following:*** ***1. Fleet*** ***2. VIN*** ***3. Fuel system s/n***	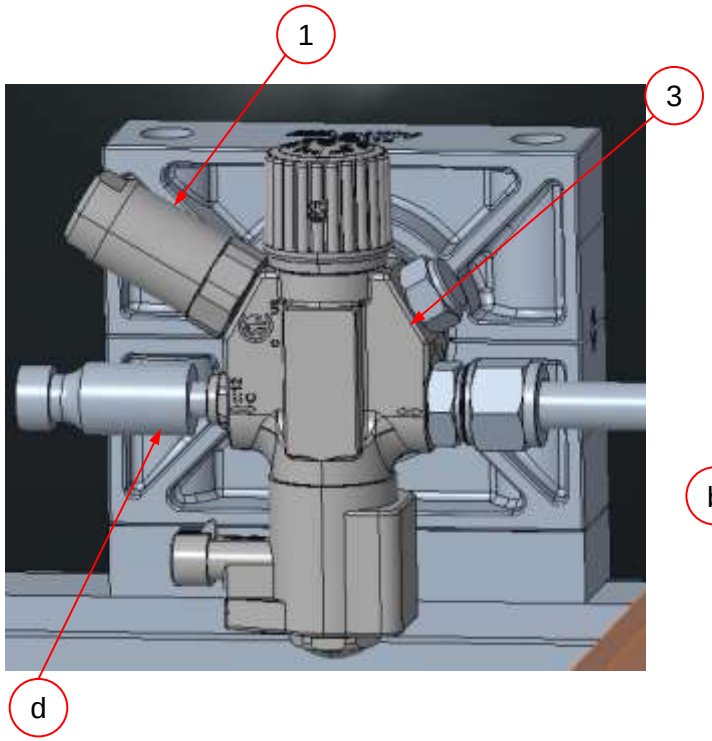 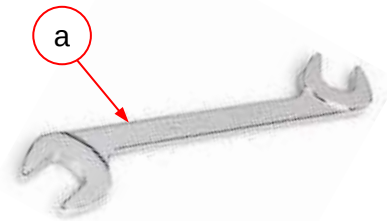
WHY	Agility® collects all PRDs removed.	

5	1. Use Swagelok® Snoop® a microfiber towel to clean and inspect valve body (3) PRD port threads and O-ring surfaces *(not visible).* 2. Use Swagelok® Snoop® and a microfiber towel to remove old Torque Seal from fitting junction *(not shown).* C 3. Apply a light film of Parker® O-lube O-ring lube to replacement PRD (5) O-ring (4). 4. Verify O-ring (4) is properly seated. C 5. Apply Loctite® 276 to PRD (5) threads (a).	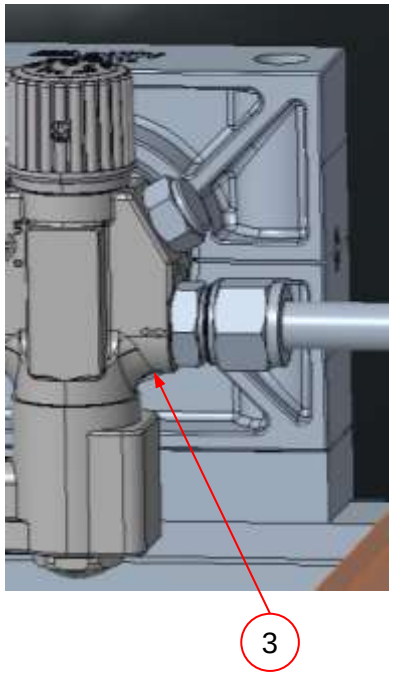
WHY	Emer™ specification.	

6	Install PRD (5) on valve body (3) using a 15/16-in. angled open end wrench (Tekton® p/n WAE83024) (a) or a modified 1/2-in. drive 24mm deep socket (b) and ratchet *(not shown).* c ***Torque PRD (5) to* 30Nm (22 ft-lbs).**	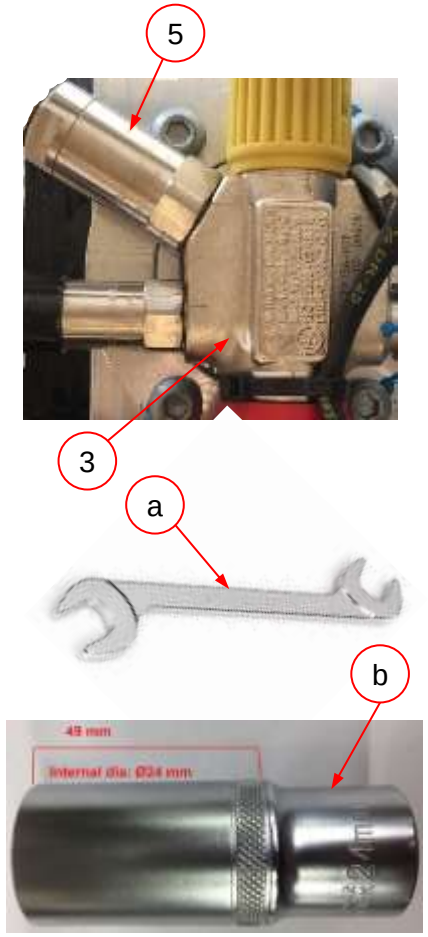	7	1. Move jamb nut (b) to base (c) of elbow fitting (7). 2. Use a wrench to install elbow fitting (7) on PRD (1). 3. Use a wrench to hold PRD (1) at PRD flats (a). 4. Position elbow fitting (7) to line up with PRD vent tube *(not shown).* 5. Tighten elbow fitting jam nut (b). c ***Torque elbow fitting jam nut (b) to* 45 ft-lbs (61Nm).**	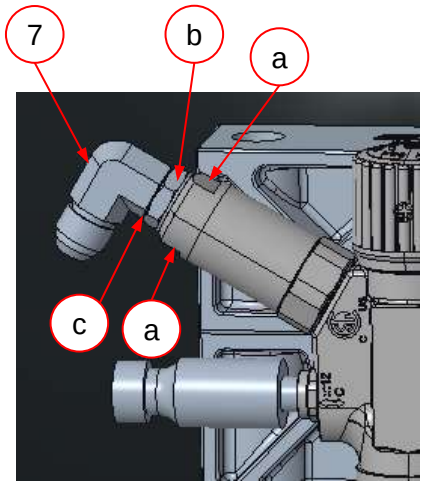
WHY	System specification.		WHY	System specification.	

DRAFT

8	Use a pair of wrenches to install PRD vent tube (6) nut fitting (a) on elbow fitting (7). c ***Torque elbow fitting (7) jam nut (b) to 45 ft-lbs (61Nm).***	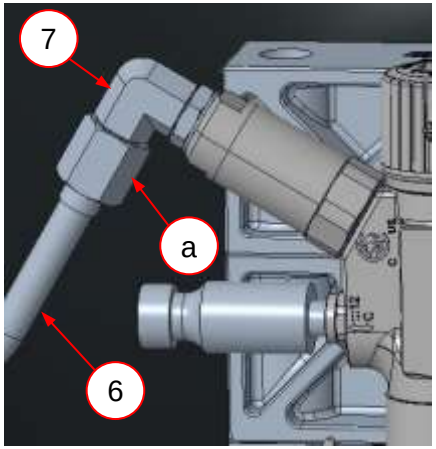	9	Repeat Steps 1 through 8 until all eight valve end PRDs have been replaced. **NOTICE** ***Do not tighten PRD vent tube clamps (8); clamps will be tightened later.***	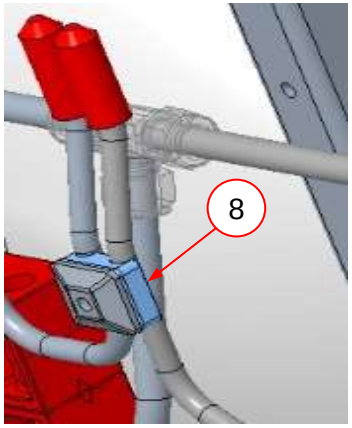
WHY	System specification.		WHY		

DRAFT

5.4. Remove Emer™ remote PRDs, Emer™ p/n PRD2302T-004

1	
WHAT	1. Use two wrenches to loosen nut fittings (a) on each Emer™ PRD (d). 2. Use wrenches to remove fasteners securing the following items: A. P-clip (7) B. Dual tube clamp (8) C. Plate (6) c Retain all clips, clamps, plates and fasteners for reuse. **NOTICE** ▪ ***Support PRD and PRD vent assembly while removing clips and clamps.*** ▪ ***Use caution to avoid contact with cylinders or PRD supply tube (f).*** 3. Carefully remove Emer™ PRDs (d) and PRD vent tubes (5a) and (5b) from each PRD bracket (9) as complete assemblies. 4. Repeat for all plug end cylinders on all roof mount pods.
WHY	Protect cylinders from damage.

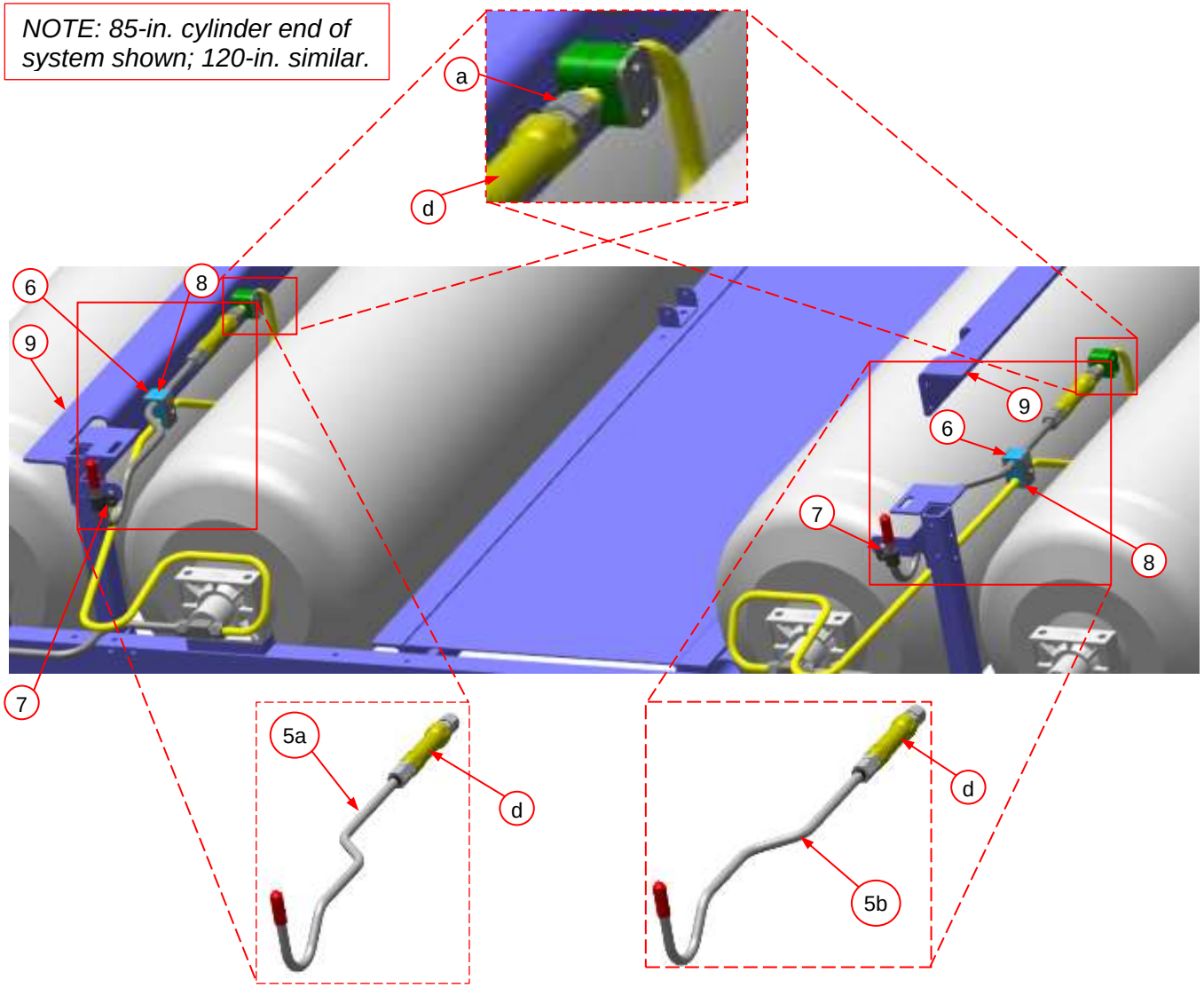

2	Use a pair of wrenches to remove all Emer™ PRDs (d) from PRD vent tubes (5a) and (5b). **NOTICE** ***Dispose of PRD vent tubes (5a) and (5b) according to facility guidelines.***	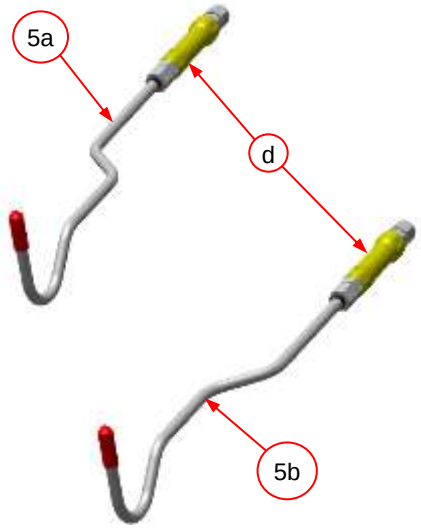	3	c Use form FT.0323 (c) to record the following data for each Emer™ PRD (d) removed: A. Date of Manufacture (a) B. Batch number (b)	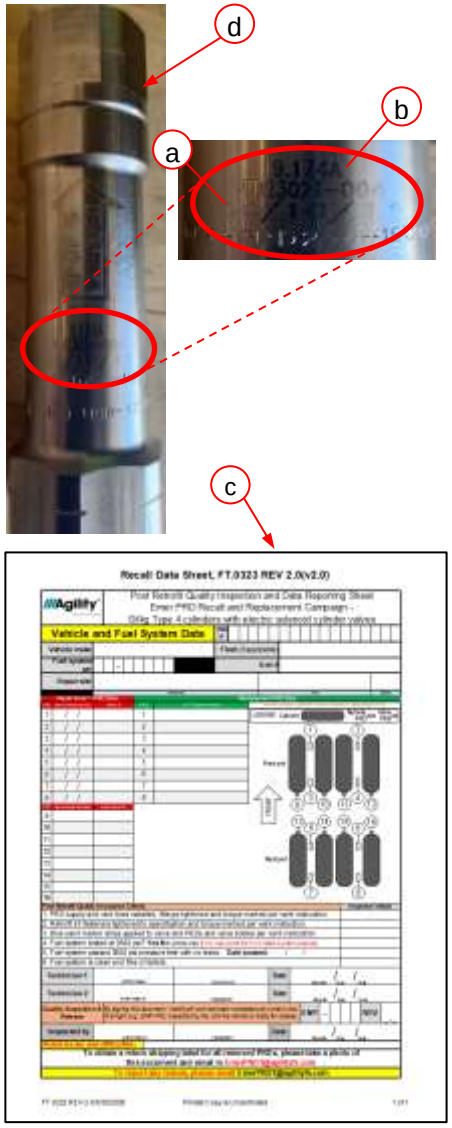
WHAT			WHAT		
WHY	PRD vent tubes will not be reused.		WHY	Required for retrofit kit component and repair tracking and, if applicable, installer reimbursement.	

DRAFT

4	Place all removed Emer™ PRDs in zip lock bag provided with bulk retrofit kit shipment. **NOTICE** ***Place only PRDs from one vehicle in each zip lock bag.*** ***Bag must be labeled with the following:*** ***1. Fleet*** ***2. VIN*** ***3. Fuel system s/n***				
WHY	1. Bag helps prevent PRD contamination. 2. Agility is collecting all PRDs removed; return material authorization (RMA) instructions appear below.				

DRAFT

5.5. Install PRD retrofit kits

5.5.1. Kit, Retrofit, Gillig, 85" tanks PRD Retrofit, p/n 25519030, installation instructions

NOTICE

Always perform installation steps in the order specified.

1	1. Install ferrules *(not visible)* and nut (a) from tee fitting (12), p/n 10200208, on PRD tube, (13), p/n 25519417. 2. Install ferrules *(not visible)* and nut (b) from tube fitting (14), p/n 10200065, on PRD tube, (13). 3. Install ferrules *(not visible)* and nut (c) from tee fitting (12), p/n 10200208, on tube adapter fitting, (17), p/n 10200238. **NOTICE** ***Refer to Appendix A: WI.0197 Manual Swaging of Swagelok Fittings.***	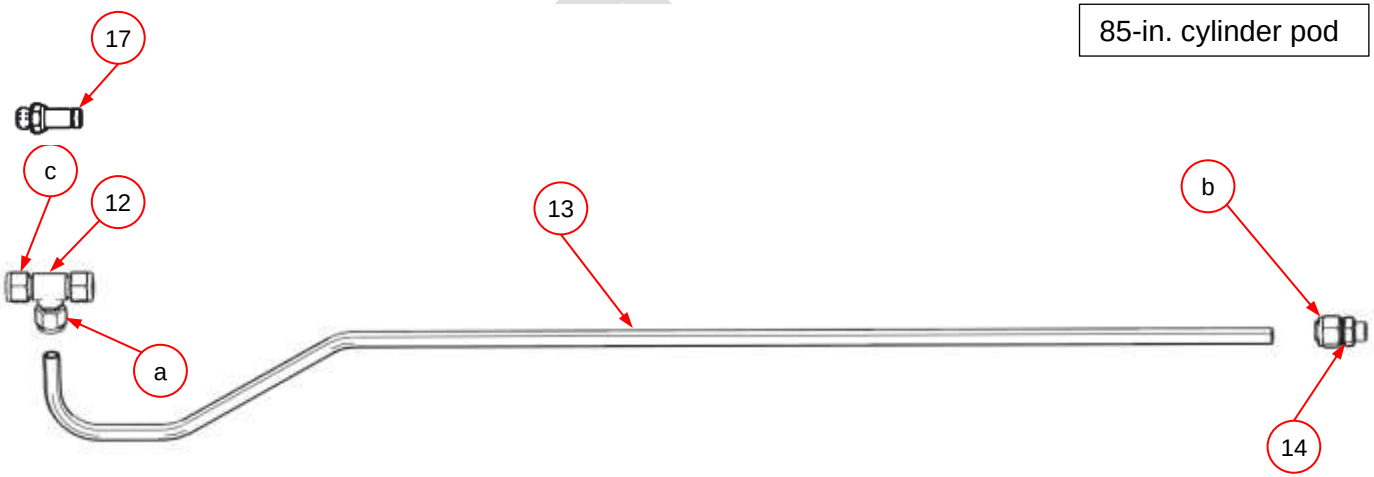
WHY		

WHAT

DRAFT

2	
WHAT	1. Install tee fitting (12), p/n 10200208, on PRD tube, (13). **NOTICE** ***Tighten fitting finger tight; fittings will be tightened at a later step.*** 2. Install two tube clamp kits (15), p/n 10701508, on PRD tube, (13). 3. Insert one 1.5-in. hex cap screw (a), p/n 10760200-0150, and one 2.5-in. hex cap screw (b), p/n 10760200-0120, into each tube clamp kit (15), as shown in INSET A. 4. Install one flat washer, p/n 10761000, and one flange top nut, p/n 10763000 *(not shown)* on each hex cap screw inserted. 5. Secure clamps (15) at existing holes *(circled)* on PRD bracket (9). **NOTICE** ***To ease component installation, leave fasteners loose.***
WHY	Support PRD vent lines.

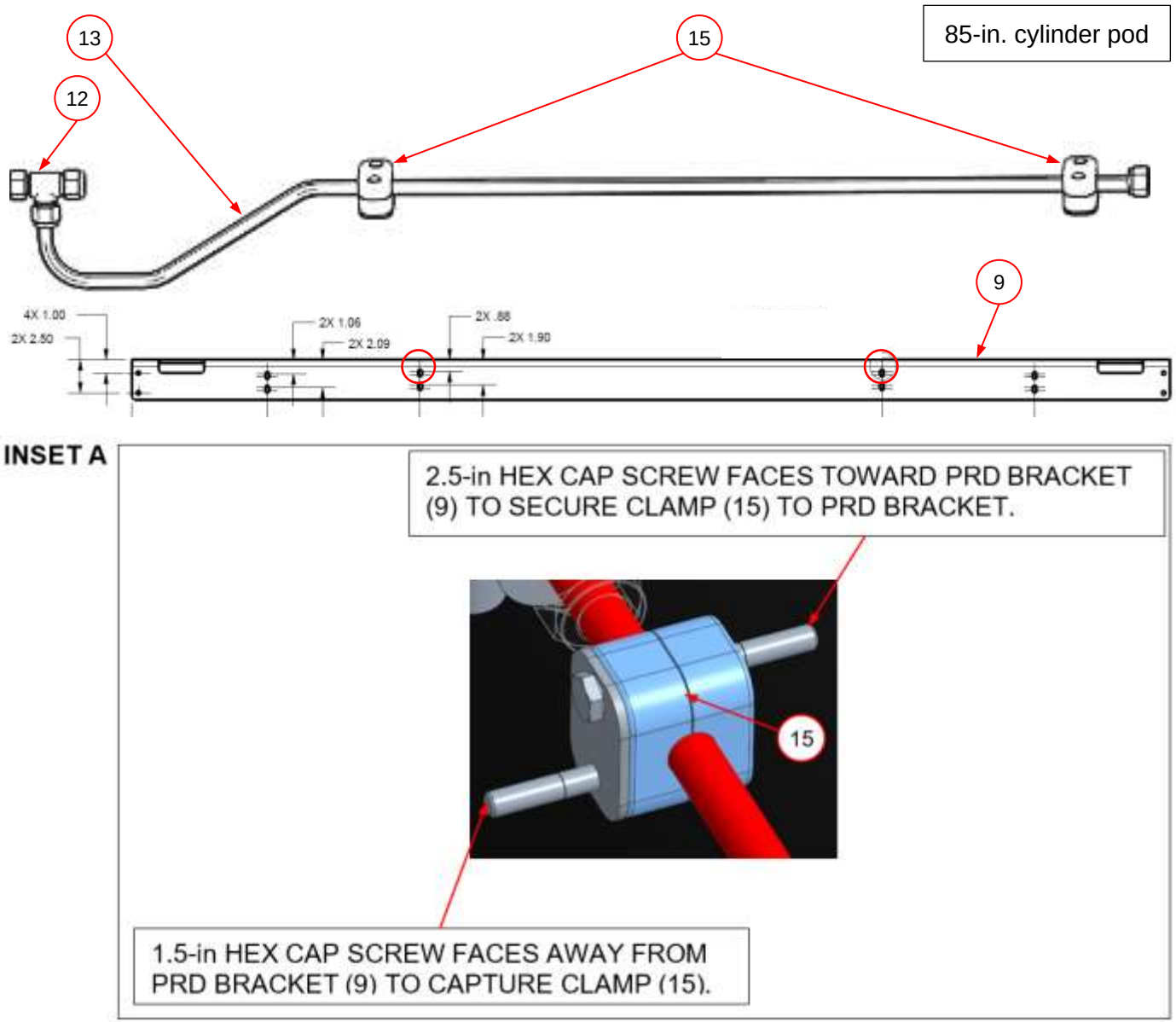

3	Install PRD supply tube (5c) nut fitting (a) at tee fitting (12) of PRD tube (13). **NOTICE** ***Tighten fitting finger tight; fitting will be torqued at a later step.***	85-in. cylinder pod 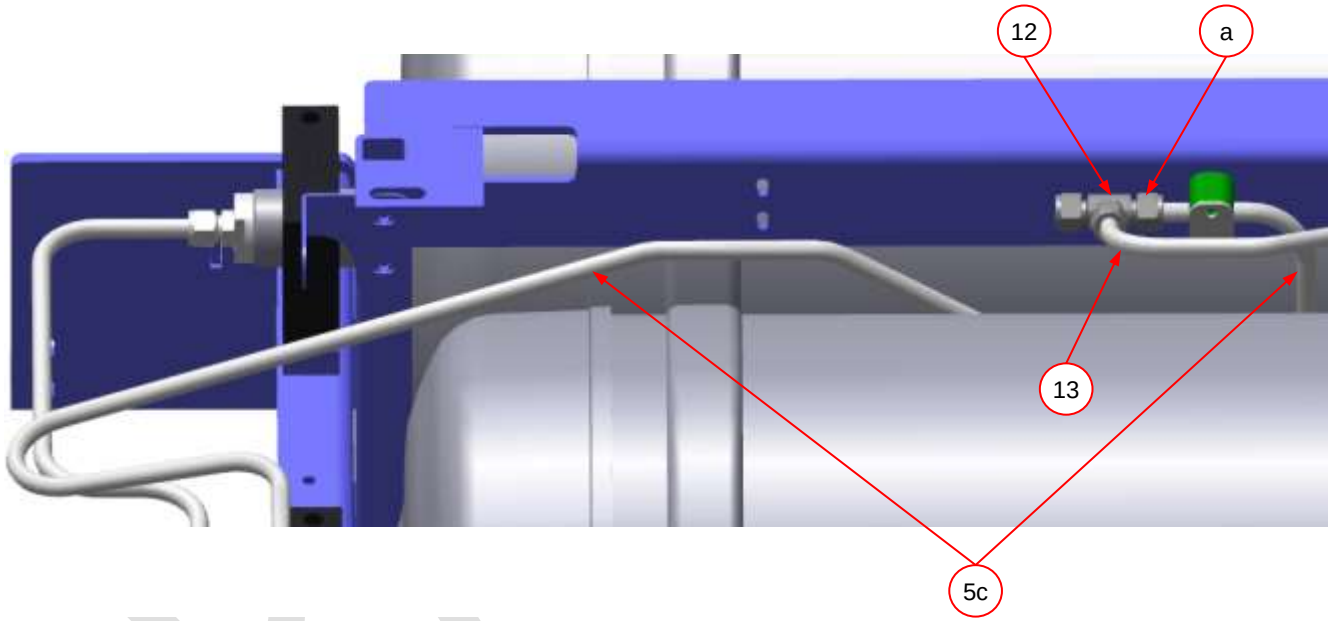
WHAT		
WHY		

4	
WHAT	**M** ***Always use a backing wrench on the main fitting while using a wrench to install another fitting.*** 1. Install tube adapter fitting (17), p/n 10200238 on VTI PRD (16b), p/n 10300513. **C** ***Torque fitting (17) to 26 ft-lbs (35.25Nm)*** 2. Install straight fitting (18), p/n 10200563, on VTI PRD (16a), p/n 10300513. 3. Install straight fitting (18), p/n 10200563, on VTI PRD (16a), p/n 10300513. **C** ***Torque fittings (18) to 18.5 ft-lbs (25Nm).*** 4. Install tube fitting (14), p/n 10200065, on VTI PRD (16a), p/n 10300513. **C** ***Torque fitting (14) to 45 ft-lbs (61Nm).***
WHY	

85-in. cylinder pod

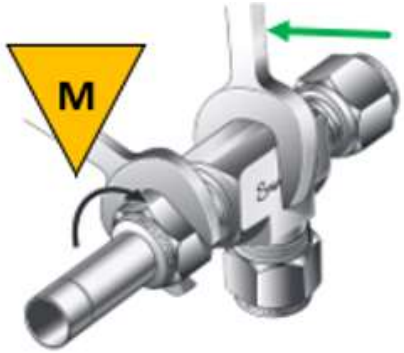

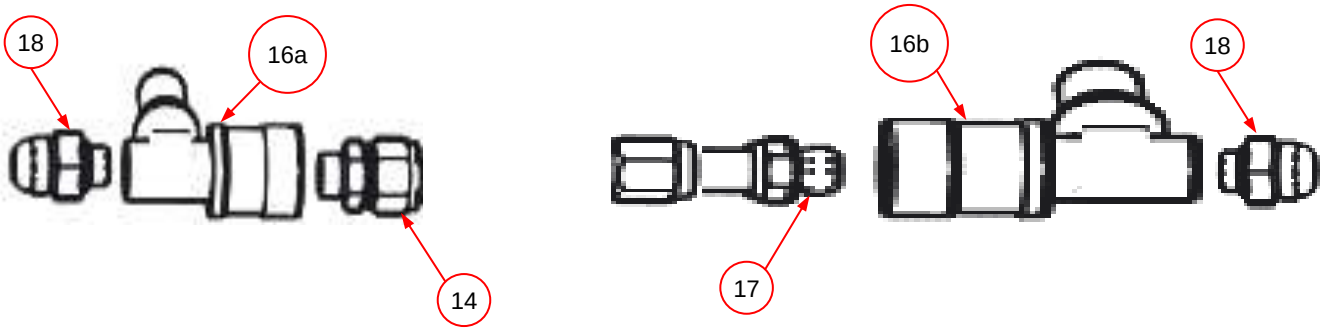

5		
WHAT	1. Install VTI PRD (16a) assembly inlet fitting (a) on PRD supply tube (13) at tee fitting (12). 2. Install VTI PRD outlet fitting (16b) on straight fitting (b) on other end of PRD supply tube (13). **NOTICE** ***Tighten fittings finger tight; fittings will be torqued at a later step.*** ***PRD ports (c) must be oriented 90° down from the flow of system tubing as shown.***	85-in. cylinder pod 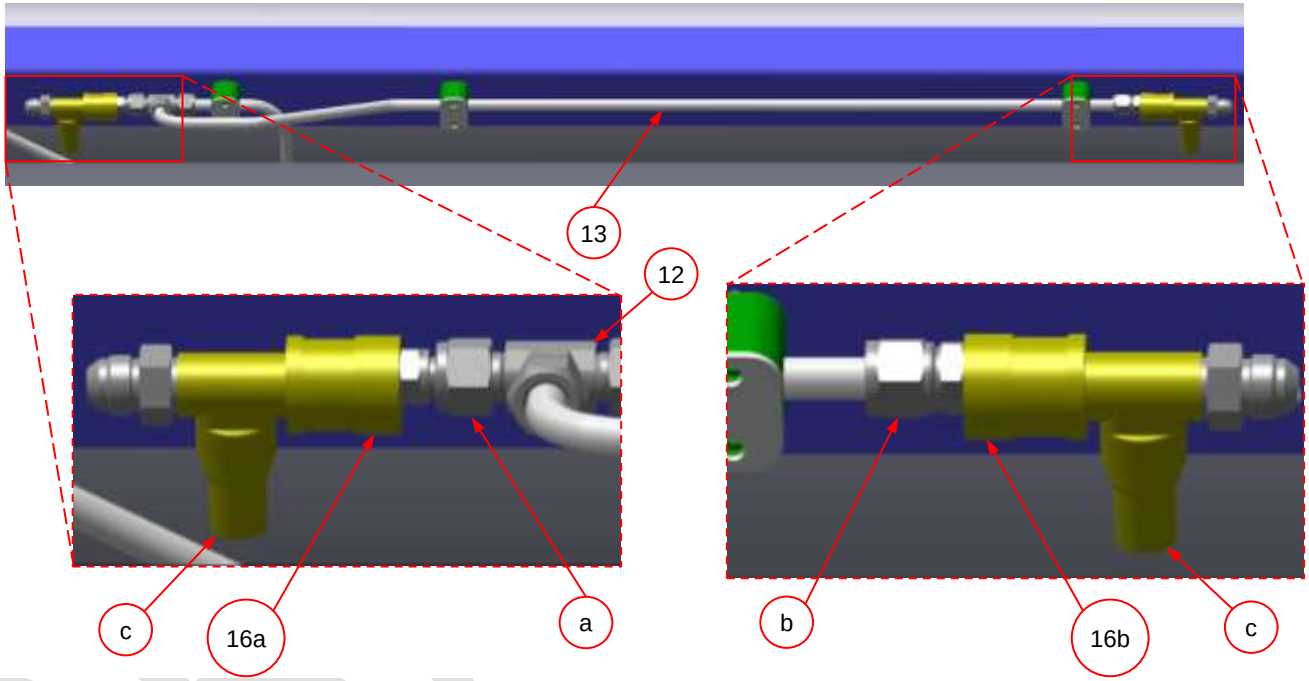
WHY		

6a	1. Install PRD vent tube (26), p/n 25519026, on PRD (16a) fitting (a). **NOTICE** ***Tighten nut fitting finger tight; fittings will be tightened at a later step.*** 2. Slip dual tube clamp (8), on PRD vent tube (26), and on PRD vent tube (5a). 3. Use dual tube clamp (8) fasteners *(not visible)* to secure plate (6) and PRD vent tube (26), to PRD bracket (9) at hole *(circled).* 4. Slide P-clip on PRD vent tube (26) and use existing fastener to secure P-clip (7) to P-clip bracket (b). **NOTICE** ***Tighten fasteners finger tight; fasteners will be torqued at a later step.***	85-in. cylinder pod 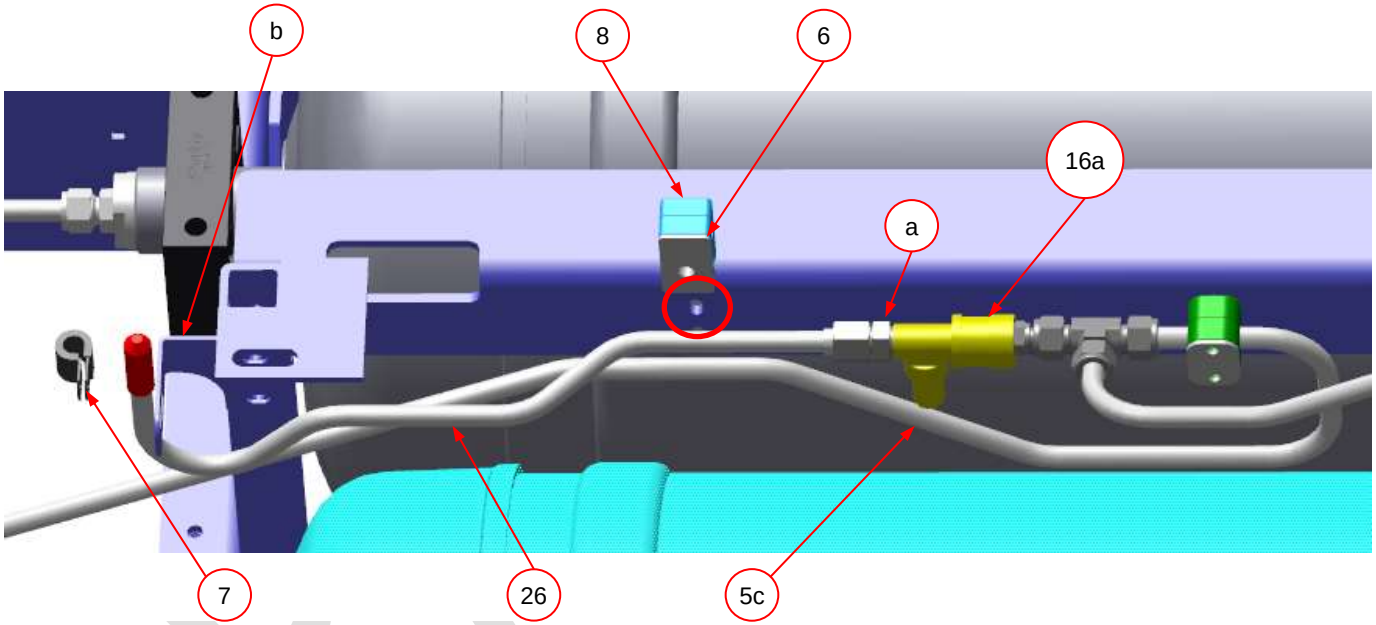
WHY		

6b	
WHAT	1. Install PRD vent tube (37), p/n 25519037, on PRD (16b) fitting (a). **NOTICE** ***Tighten nut fitting (b) finger tight; fitting will be tightened at a later step.*** 2. Slip tube clamp kit (15), on PRD vent tube (37). 3. Insert one 1.5-in. hex cap screw, p/n 10760200-0150, and one 2.5-in. hex cap screw, p/n 10760200-0120, into each tube clamp kit (15), as shown in INSET A. 4. Install one flat washer, p/n 10761000, and one flange top nut, p/n 10763000 *(not shown)* on each hex cap screw inserted in previous sub step. 5. Secure PRD vent tube (37) to PRD bracket (9) at existing hole. **NOTICE** ***Tighten fasteners finger tight; fasteners will be torqued at a later step.***
WHY	

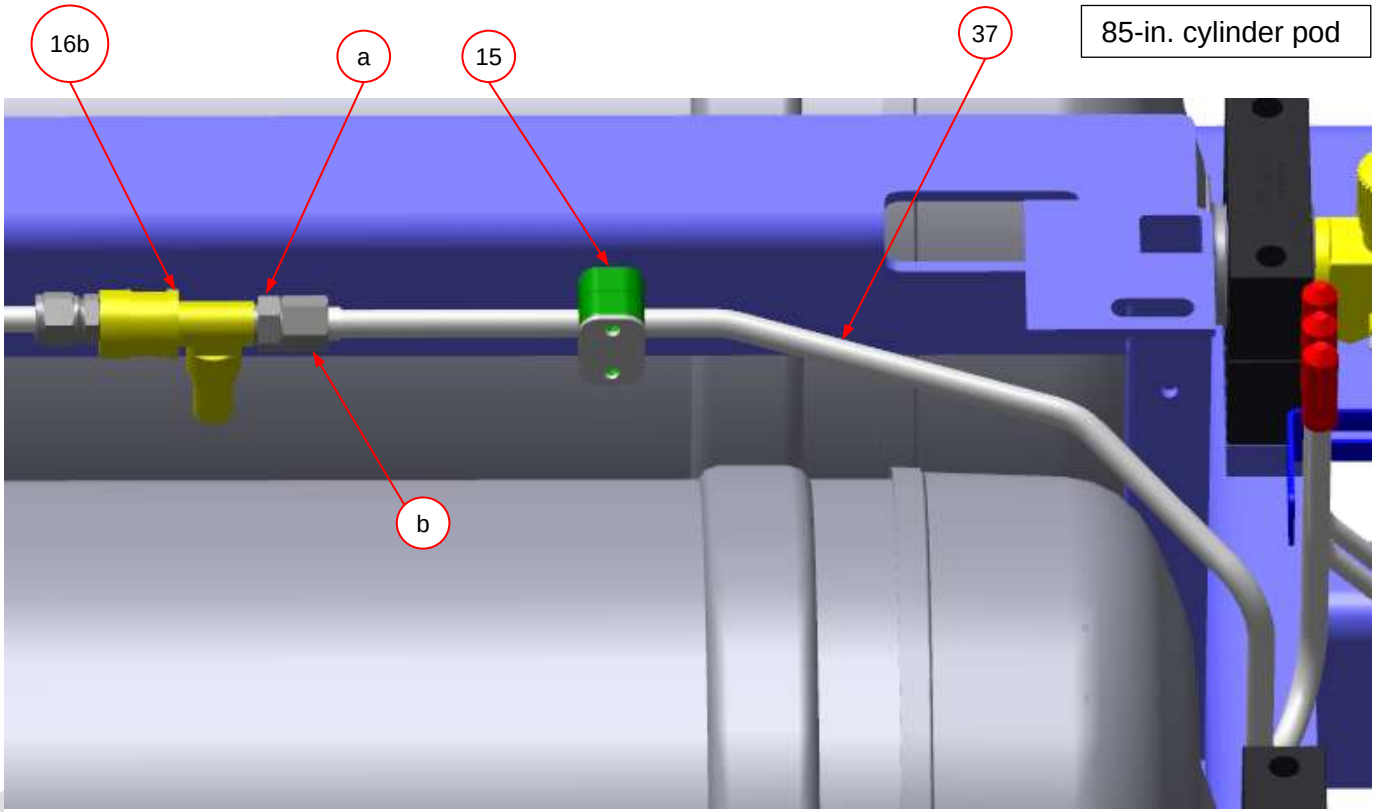

INSET A

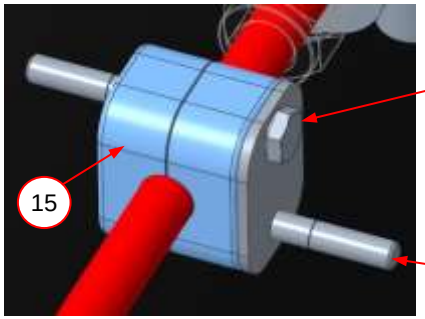

2.5-in. HEX CAP SCREW FACES TOWARD PRD BRACKET (9) TO SECURE CLAMP (15) TO PRD BRACKET.

1.5-in. HEX CAP SCREW FACES AWAY FROM PRD BRACKET TO CAPTURE CLAMP (15).

7	
WHAT	1. Install tube clamp bracket (23), p/n 25519123, on existing double tube clamp (8) using the double tube clamp fasteners. 2. Install P-clip (7), p/n 10702147, on PRD vent tube (37), p/n 25519037, and secure to bracket (23), p/n 25519123 using one hex cap screw, p/n 10760200-0100, one flat washer, p/n 10761000, and one flange top nut, p/n 10761300. **NOTICE** ***Tighten fasteners finger tight; fasteners will be tightened at a later step.***
WHY	System specification.

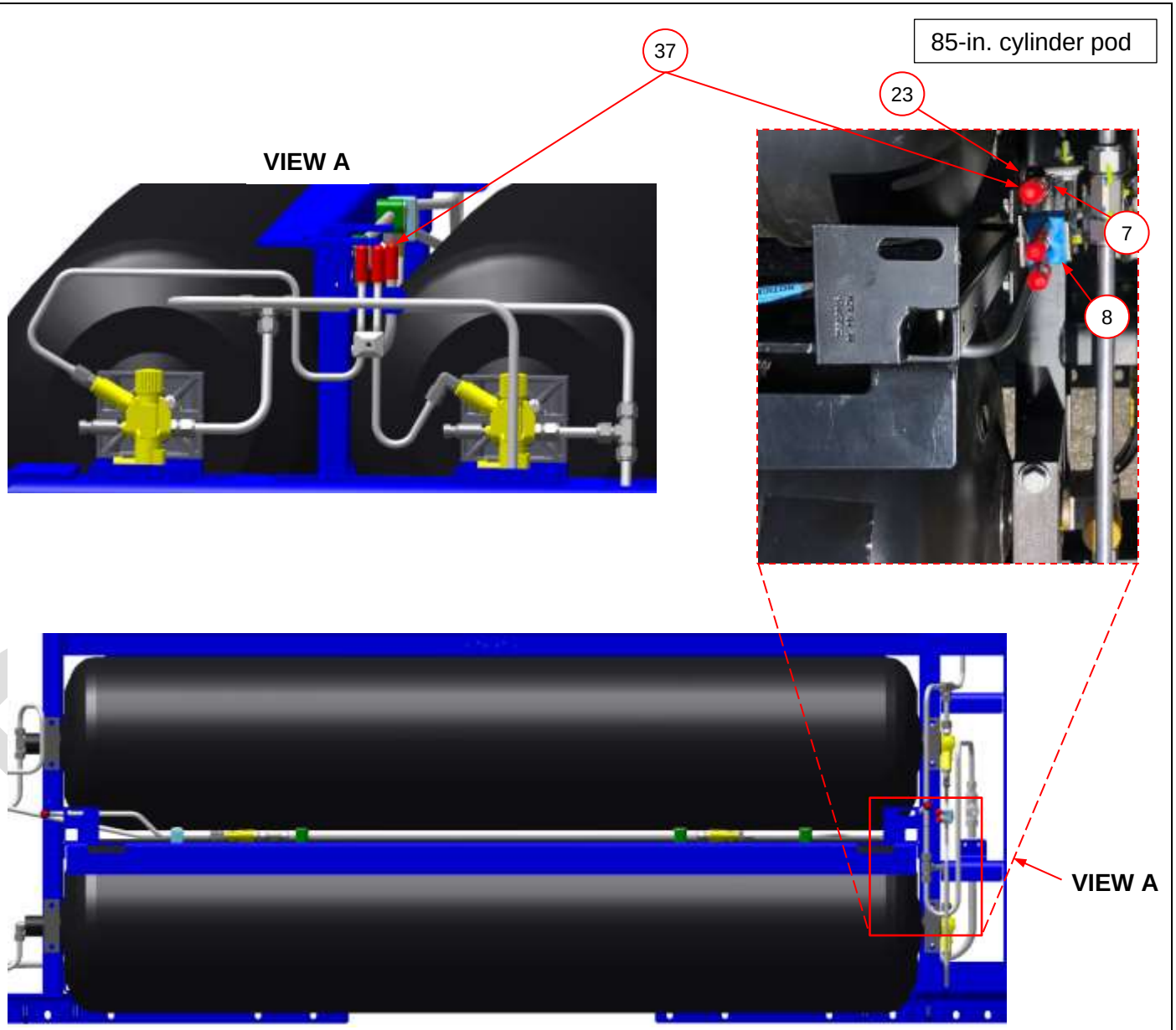

8a	WHAT	c Use two wrenches to tighten 1/2-in. Swagelok® fitting nuts indicated in the following sequence: 1. (a) 2. (b) 3. (c) 4. (d) ***Tighten 1/2-in. Swagelok® fittings per Appendix B WI.0441.***
	WHY	System specification.

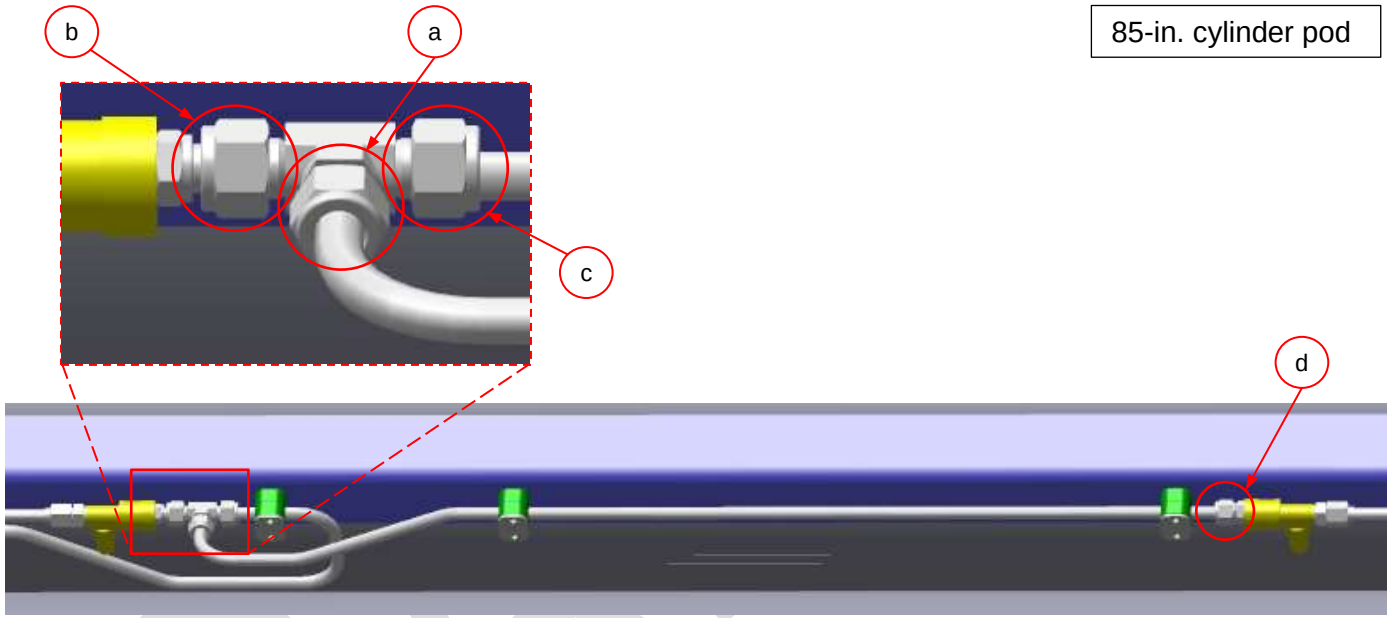

8b	WHAT	c Use two wrenches to tighten SAE / JIC fitting nuts at the locations indicated in the following sequence: 1. (e) 2. (f) ***Tighten SAE / JIC fittings to* 45 ft-lbs (61Nm).**
	WHY	System specification.

9	
WHAT	c Tighten clamp fasteners at all clamp locations *(circled)* using the following sequence: 1. (a) 2. (b) 3. (c) 4. (d) 5. (e) 6. (f) ***Tighten fasteners to* 8 ft-lbs (11Nm).**
WHY	System specification. **NOTICE** ***Proper tightening sequence is crucial to system performance.***

85-in. cylinder pod

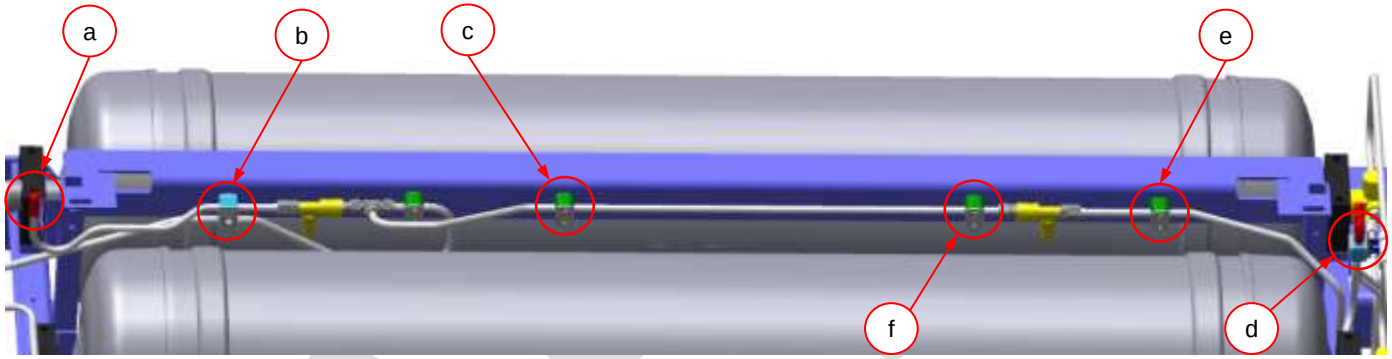

DRAFT

10		
WHAT	c 1. Verify clearance between PRD vent tubes (a), live high pressure PRD vent tubes (b), and fuel tubes (c) is 3/8-in. minimum. c 2. Verify clearance between all system plumbing and cylinders (c) is 3/8-in. minimum. **NOTICE** ***If required: Adjust tube clips and clamps as required and repeat Step 10.***	85-in. cylinder pod *NOTE: Plug end shown for reference; valve end similar* 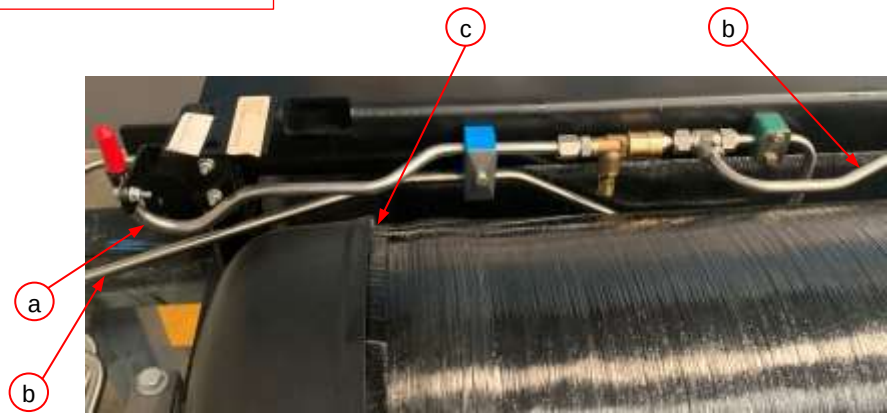
WHY	Prevent fuel line damage.	

DRAFT

11 WHAT	1. Install ferrules *(not visible)* and nut (a) from tee fitting (12), p/n 10200208, on PRD vent tube, (13), p/n 25519417. 2. Install ferrules *(not visible)* and nut (b) from tube fitting (14), p/n 10200065, on straight end of PRD vent tube (13). 3. Install ferrules *(not visible)* and nut (c) from tee fitting (12), p/n 10200208, on tube adapter fitting, (17), p/n 10200238. **NOTICE** ***Refer to Appendix A: WI.0197 Manual Swaging of Swagelok Fittings.*** 4. Install tee fitting (12), p/n 10200208, on PRD vent tube (13), p/n 25519417. **NOTICE** ***Tighten fitting finger tight; fittings will be tightened at a later step.***	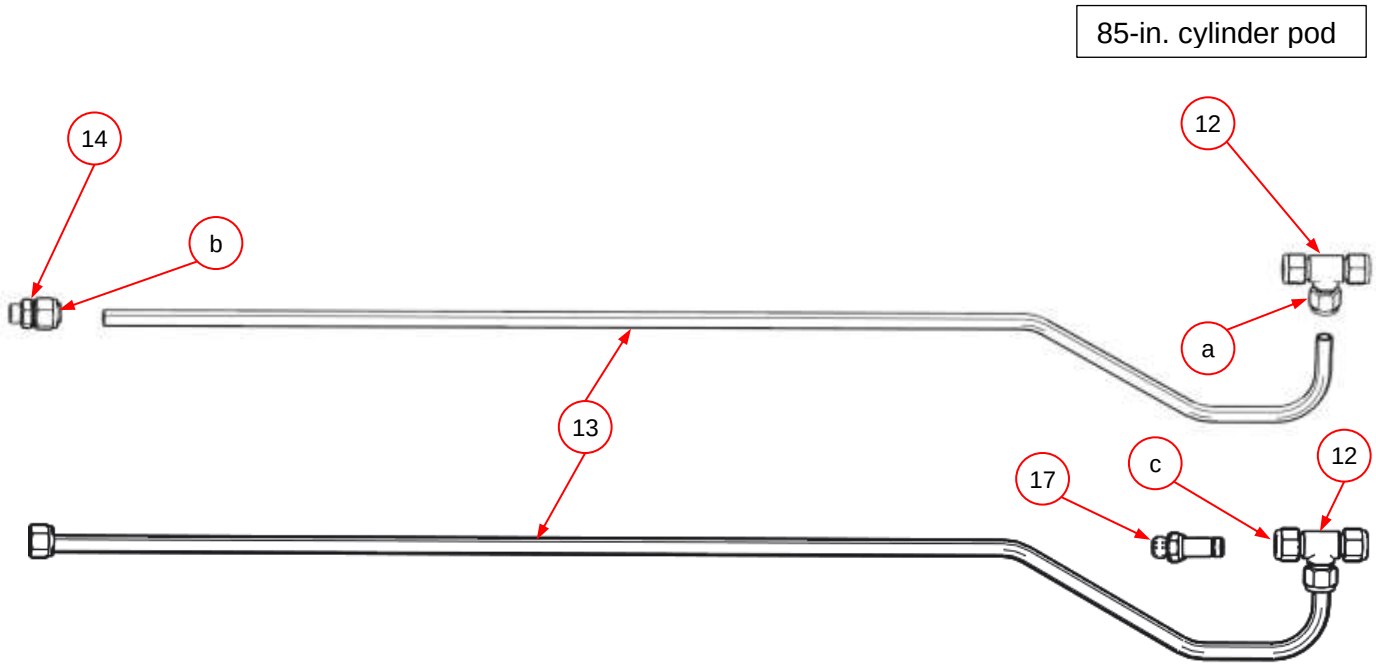
WHY		

12	
WHAT	1. Install two tube clamp kits (15), p/n 10701508, on Tube, Formed, HP Fuel, 1/2-in. X .049 -in., Tee to PRD, (13), p/n 25519417. 2. Insert one 1.5-in. hex cap screw, p/n 10760200-0150, and one 2.5-in. hex cap screw, p/n 10760200-0120, into each tube clamp kit (15), as shown in INSET A. 3. Install one flat washer, p/n 10761000, and one flange top nut, p/n 10763000 *(not shown)* on each hex cap screw inserted in previous sub step. 4. Secure PRD vent tube (13) to PRD bracket (9) at existing holes *(circled).* **NOTICE** ***To ease component installation, do not tighten fasteners completely; fasteners will be torqued at a later step***
WHY	Support PRD vent lines.

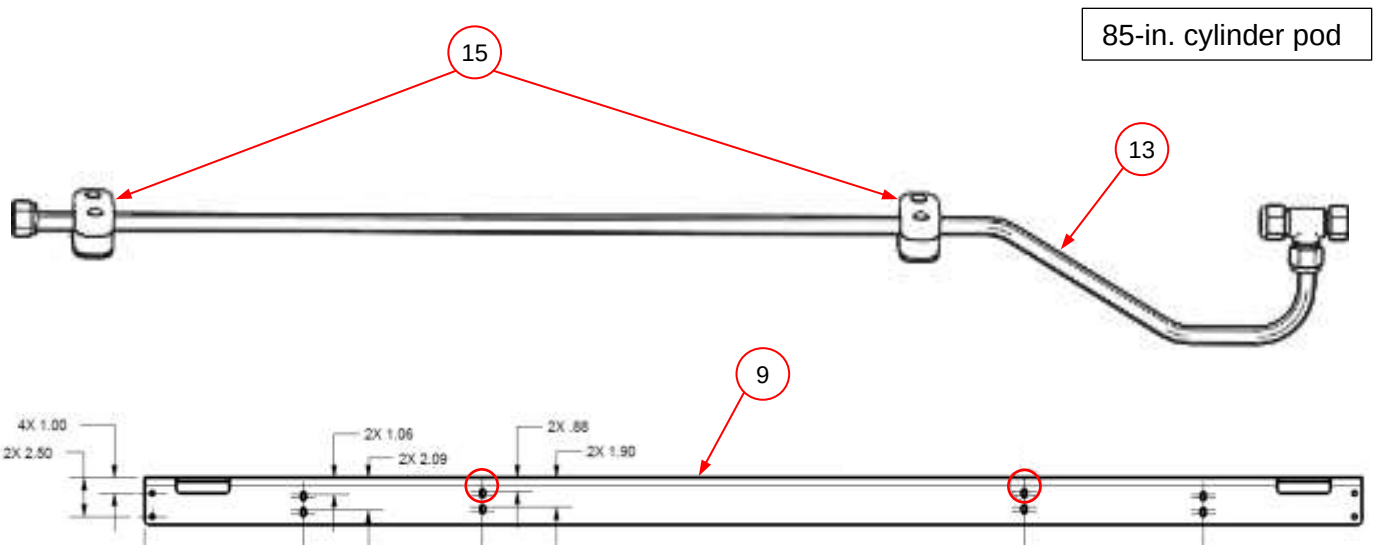

INSET A

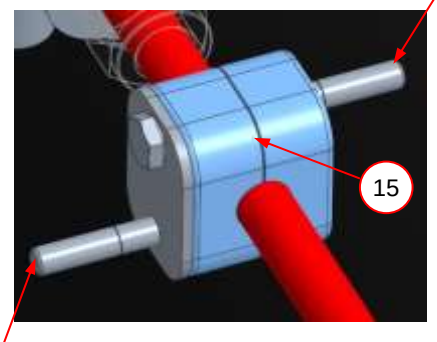

13	Install PRD supply tube (5b) on tee fitting (12) on PRD supply tube (13). **NOTICE** ***Tighten fitting finger tight; fitting will be tightened at a later step.***	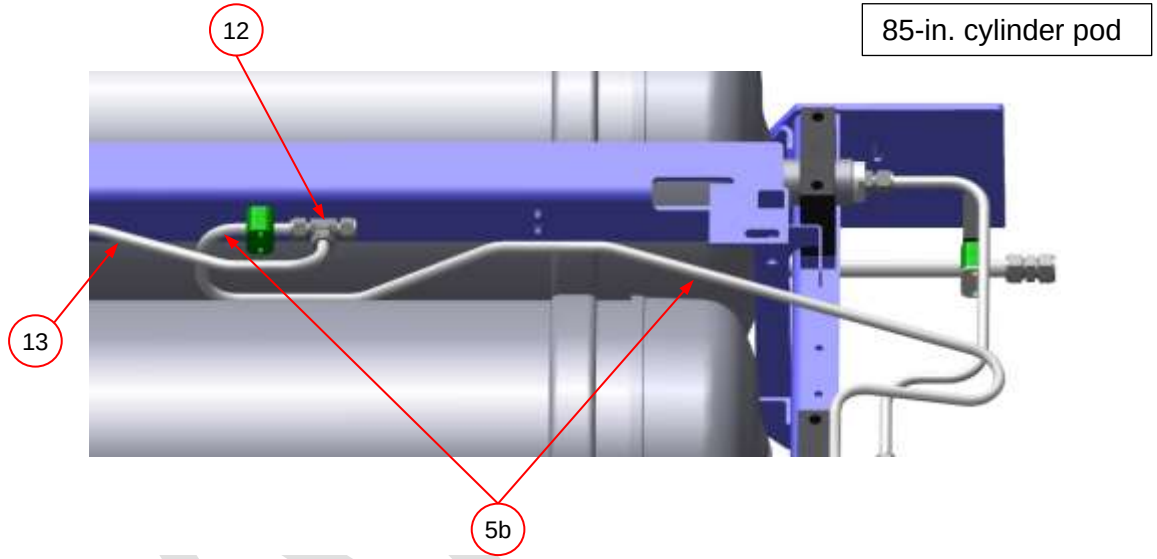
WHAT		
WHY		

DRAFT

14	
WHAT	M ***Always use a backing wrench on the main fitting while using a wrench to install another fitting.*** 5. Install tube adapter fitting (17), p/n 10200238 on VTI PRD (16b), p/n 10300513. C ***Torque fitting (17) to 26 ft-lbs (35.25Nm)*** 6. Install straight fitting (18), p/n 10200563, on VTI PRD (16a), p/n 10300513. 7. Install straight fitting (18), p/n 10200563, on VTI PRD (16a), p/n 10300513. C ***Torque fittings (18) to 18.5 ft-lbs (25Nm).*** 8. Install tube fitting (14), p/n 10200065, on VTI PRD (16a), p/n 10300513. C ***Torque fitting (14) to 45 ft-lbs (61Nm).***
WHY	

85-in. cylinder pod

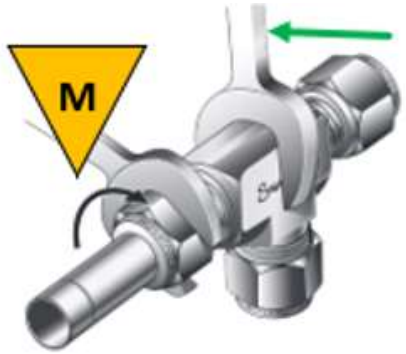

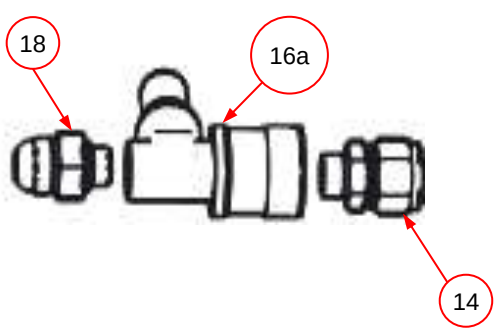

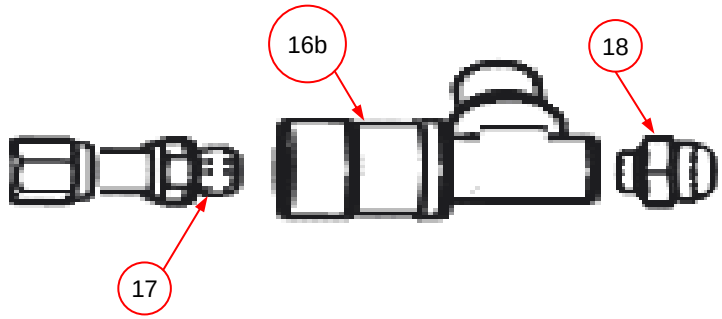

15		
WHAT	1. Install VTI PRD (16a) assembly inlet fitting (a) on PRD supply tube (13) at tee fitting (12). 2. Install VTI PRD outlet fitting (16b) on straight fitting (b) on other end of PRD supply tube (13). **NOTICE** ***Tighten fittings finger tight; fittings will be torqued at a later step.*** ***PRD ports (c) must be oriented 90° down from the flow of system tubing as shown.***	85-in. cylinder pod 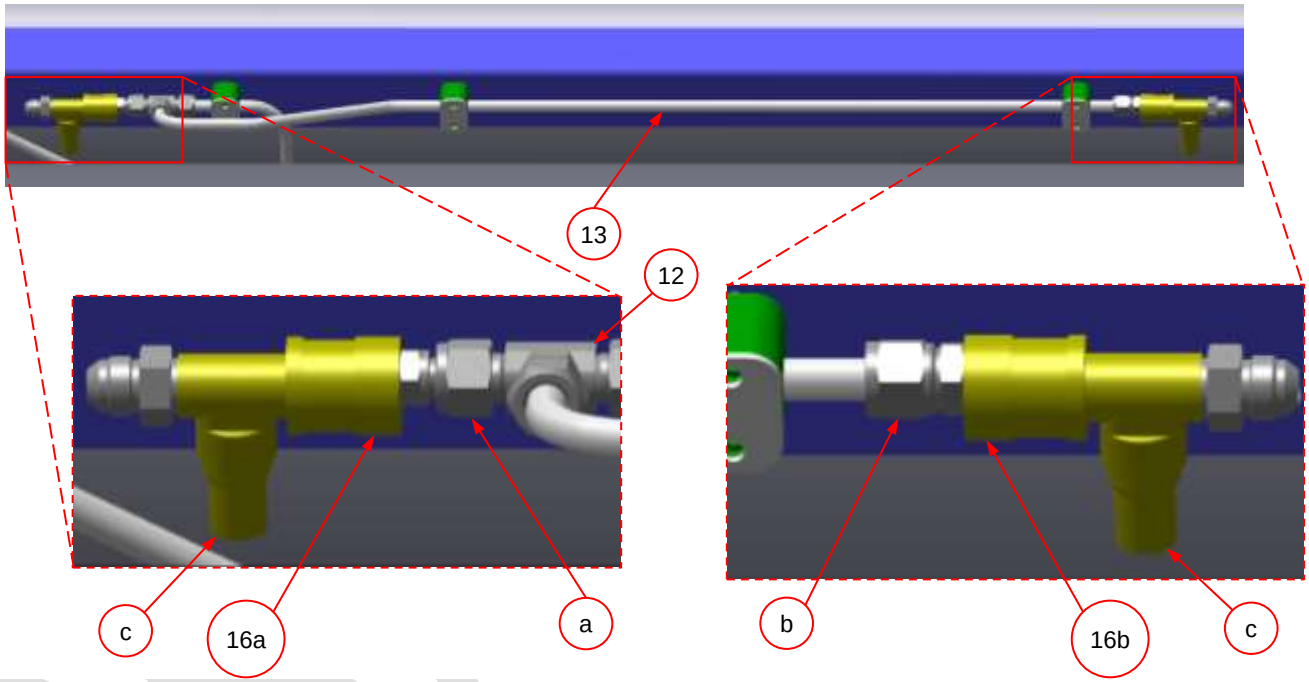
WHY		

16		
WHAT	1. Install PRD vent tube (27), p/n 25519027, on PRD (16a) fitting (a). **NOTICE** ***Tighten fittings finger tight; fittings will be torqued at a later step.*** 2. Use dual tube clamp, (8) and plate (6), to secure PRD supply tube (5d) to PRD vent tube (27). 3. Secure dual tube clamp (8) to PRD bracket (9) at existing hole. 4. Slip P-clip (7) on PRD vent tube (27). 5. Attach P-clip (7) to P-clip bracket (b) using existing fasteners *(not visible).* **NOTICE** ***Tighten fasteners finger tight; fasteners will be torqued at a later step.***	85-in. cylinder pod 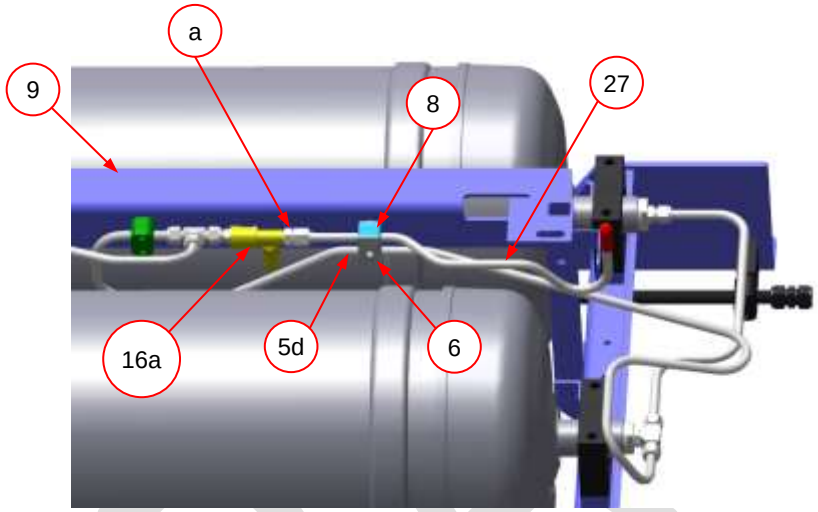 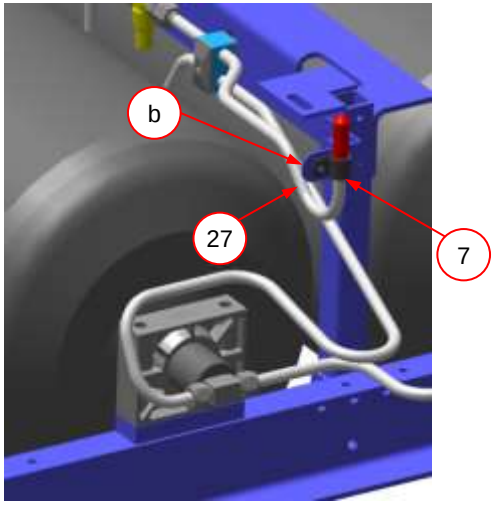
WHY		

DRAFT

17 a	c Use two wrenches to tighten 1/2-in. Swagelok® nut fittings at four locations *(circled)* in the following sequence: 1. (a) 2. (b) 3. (c) 4. (d) ***Tighten Swagelok® nut fittings per Appendix B WI.0441.***	
WHY	System specification.	

DRAFT

17 b	c A. Use two wrenches to tighten SAE / JIC nut fittings at two locations *(circled)* in the following sequence: 1. (e) 2. (f) ***Tighten SAE / JIC nut fittings to* 45 ft-lbs (61Nm).** c B. Verify vent ports of VTI PRDs (16a) and (16b) are pointed down *(arrows).*	85-in. cylinder pod
WHAT		
WHY	System specification.	

DRAFT

18	
WHAT	1. Install tube clamp bracket (23), p/n 25519123, existing double tube clamp (7) using double tube clamp fasteners *(not shown).* 2. Install P-clip (7), p/n 10702147 on PRD vent tube (37), p/n 25519037. 3. Install P-clip (8) on tube clamp bracket (23) using one hex cap screw, p/n 10760200-0100, one flat washer, p/n 10761000, and one flange top nut, p/n 10761300. **NOTICE** ***Tighten fasteners finger tight; fasteners will be tightened at a later step.***
WHY	PRD vent tubes may need to be adjusted for clearance.

85-in. cylinder pod

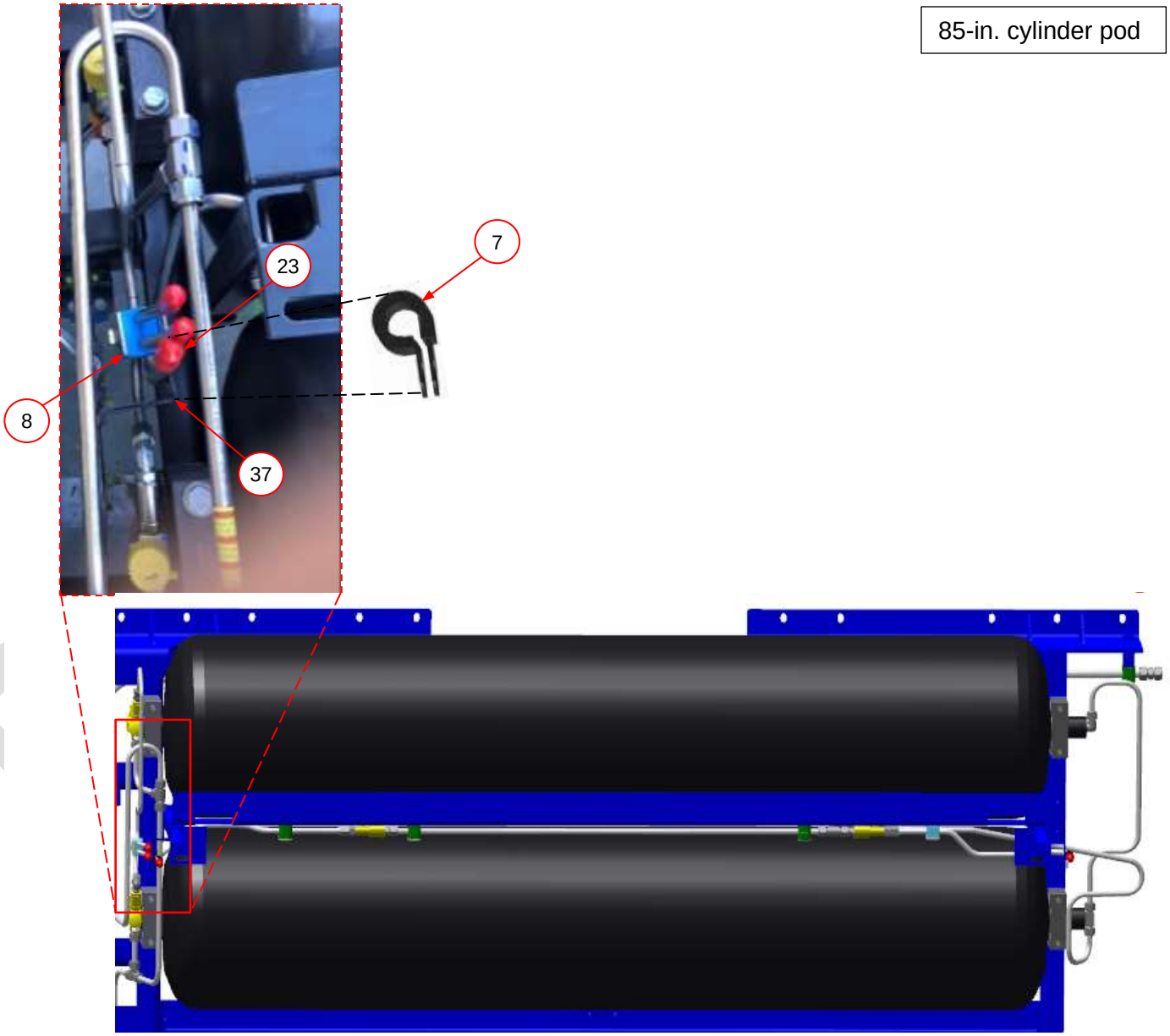

19	c Tighten fasteners at clamp and clip locations *(circled)* using the following sequence: 1. (a) 2. (b) 3. (c) 4. (d) 5. (e) 6. (f) ***Tighten fasteners to* 8 ft-lbs (11Nm).**	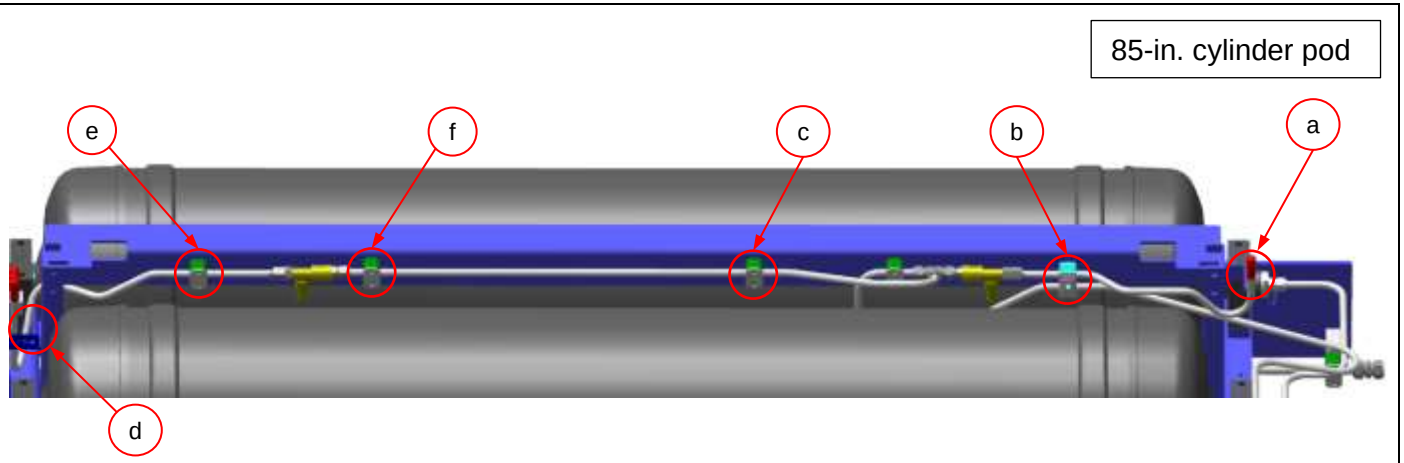
WHY	System specification.	

DRAFT

20		
WHAT	c 1. Verify clearance between PRD vent tubes (a) and live high pressure PRD supply tubes (b) is 3/8-in. minimum. c 2. Verify clearance between all system plumbing and cylinders (c) is 3/8-in. minimum. **NOTICE** ***If required: Adjust clamps as required and repeat Step 20.***	*NOTE: Plug end shown for reference; valve end similar.* 85-in. cylinder pod 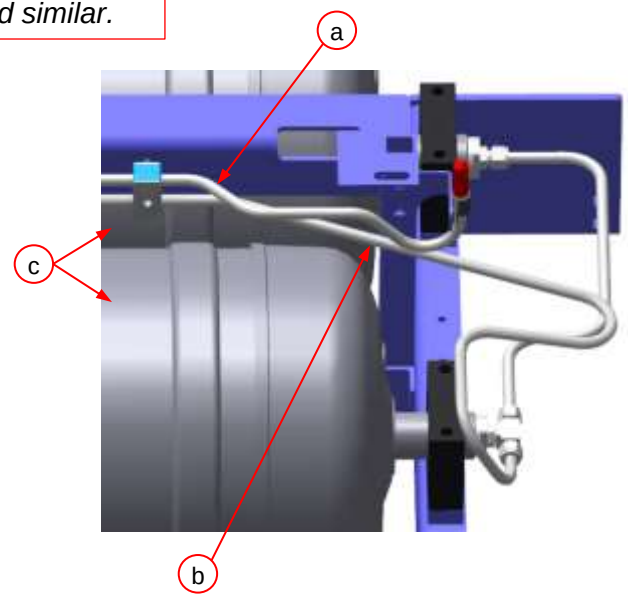
WHY	Prevent fuel line damage.	

DRAFT

21	c Apply two Decal, System, Danger Live High Pressure PRD Line (a), p/n 10602157, to PRD supply tubes as indicated.	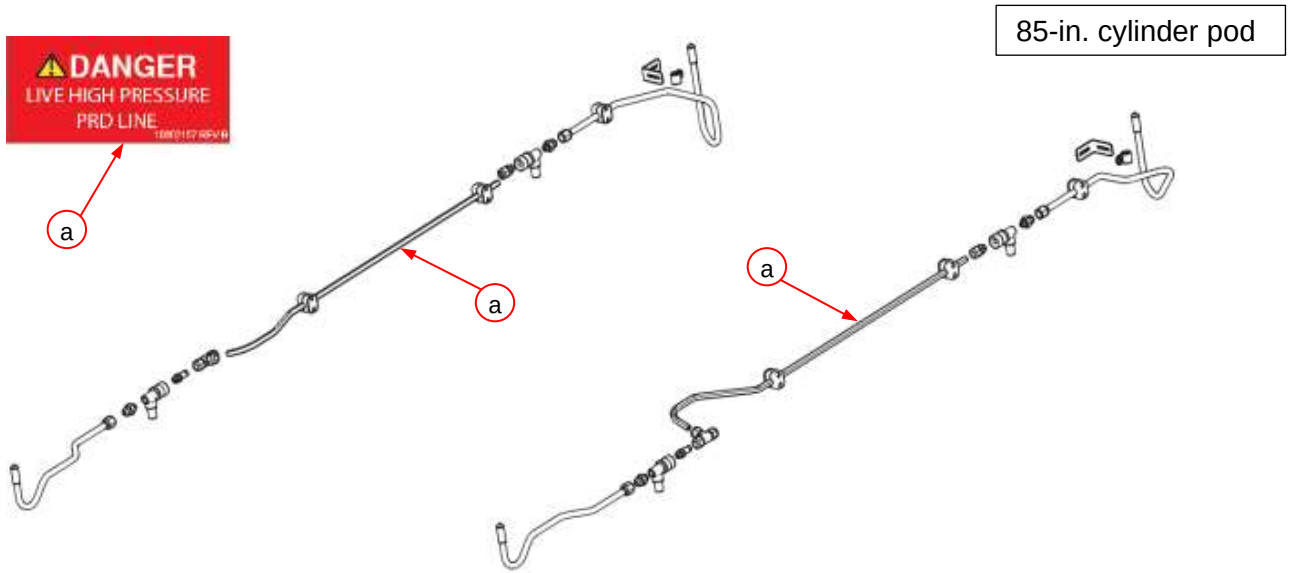
WHAT		
WHY	Operator and first responder safety.	
22	c Apply four Decal, PRD Vent Line, Caution (b), p/n 10602442, to midpoint of PRD vent tubes as indicated.	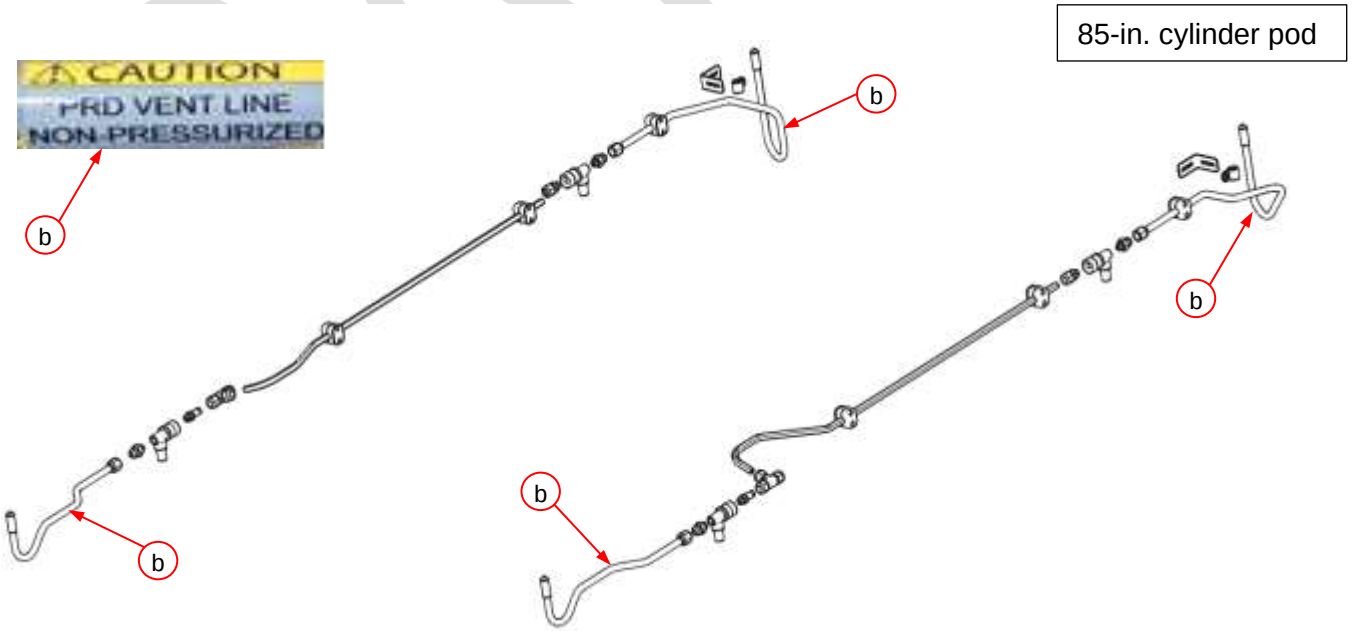
WHAT		
WHY	Operator and first responder safety.	

5.5.2. Kit, Retrofit, Gillig, 120" tanks PRD Retrofit, p/n 25519031, installation instructions

NOTICE

Always perform installation steps in the order specified.

1	c Use a 5/16-in. drill bit to drill one mounting hole at the midpoint (DETAIL A) of each of the 120-in. PRD brackets (9). **NOTICE** ***While drilling, carefully place a section of a wood 2x4 behind the hole location to prevent cylinder damage.***	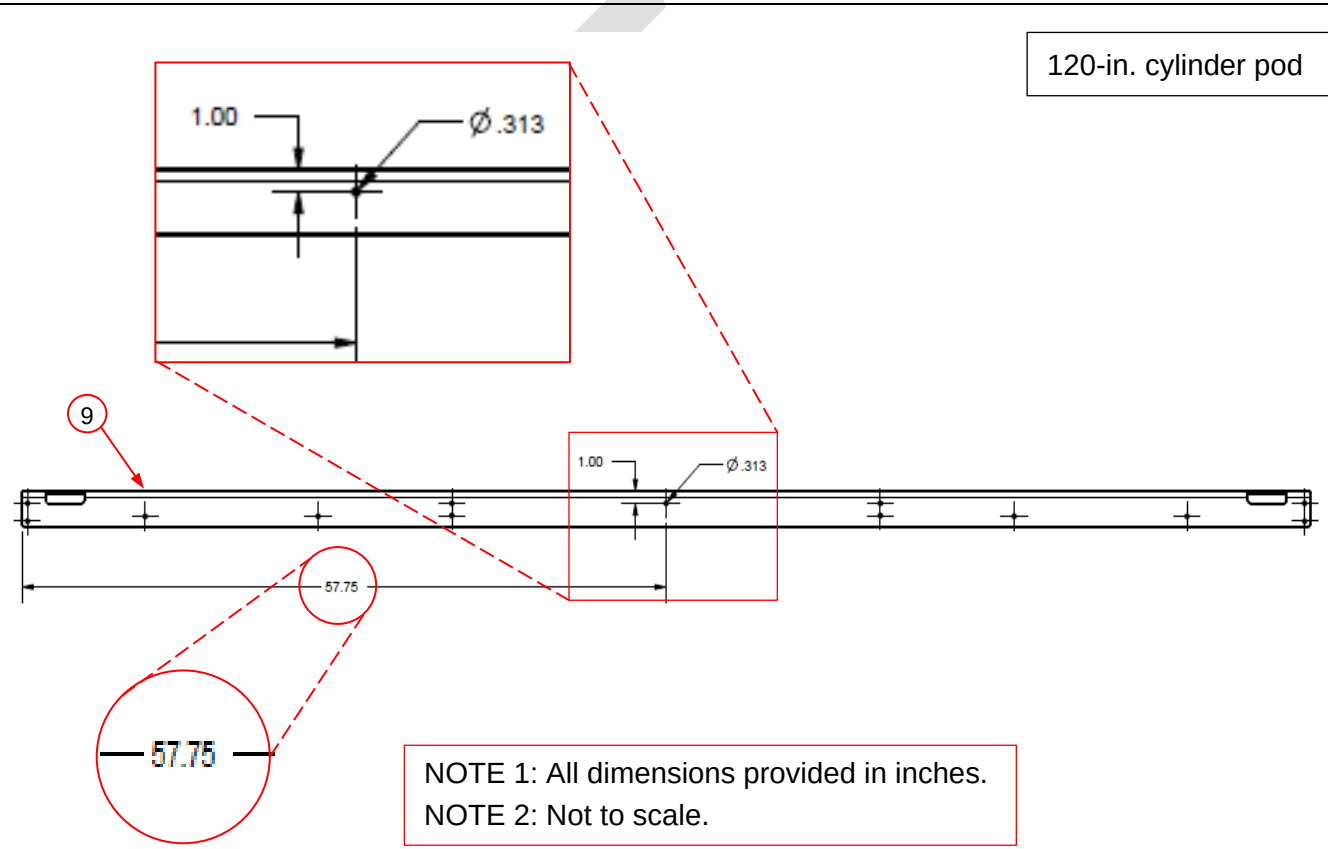
WHY	Additional mounting holes are required to secure clamps to support PRD vent system.	

2	1. Install ferrules *(not visible)* and nut (a) from tee fitting (12), p/n 10200208, on PRD vent tube (13), p/n 25519416. 2. Install ferrules *(not visible)* and nut (b) from tube fitting (14), p/n 10200065, on straight end of PRD vent tube (13). 3. Install ferrules *(not visible)* and nut (c) from tee fitting (12), p/n 10200208, on tube adapter fitting, (17), p/n 10200238. **NOTICE** ***Refer to Appendix A: WI.0197 Manual Swaging of Swagelok Fittings.*** 4. Install tee fitting (12), p/n 10200208, on PRD vent tube, (13), p/n 25519416. **NOTICE** ***Tighten fitting finger tight; fitting will be tightened at a later step.***	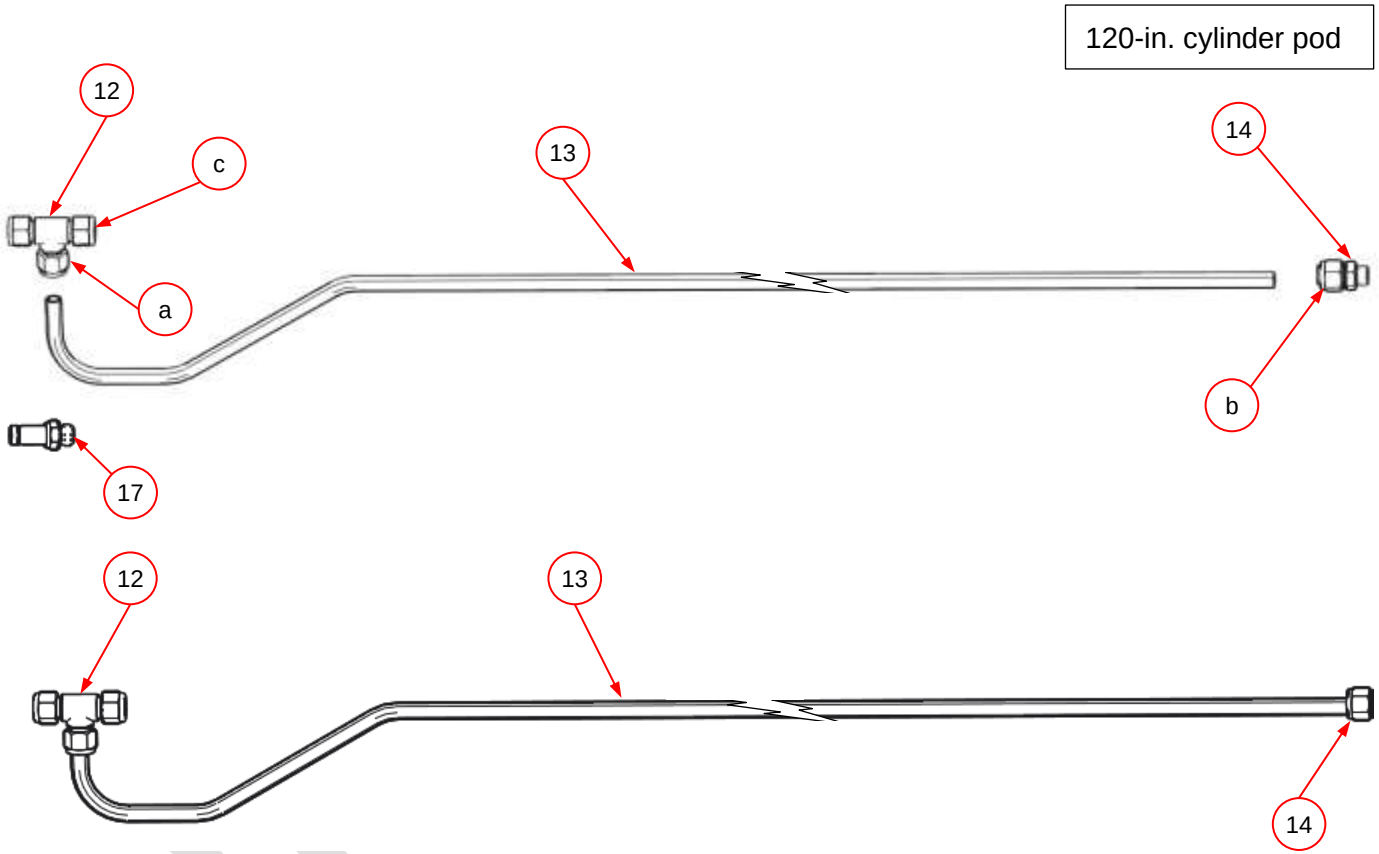
WHY		

3		
WHAT	1. Install two tube clamp kits (15), p/n 10701508, from retrofit kit on PRD tube, (13), p/n 25519417. 2. Insert one 1.5-in. hex cap screw (a), p/n 10760200-0150, and one 2.5-in. hex cap screw (b), p/n 10760200-0120, into each tube clamp kit (15), as shown in INSET A. 3. Install one flat washer, p/n 10761000, and one flange top nut, p/n 10763000 *(not shown)* on each hex cap screw inserted in previous sub step. 4. Secure PRD vent tube (13) to PRD bracket (9) at existing holes *(circled).* **NOTICE** ***To ease component installation, do not tighten fasteners completely; fasteners will be tightened at a later step.***	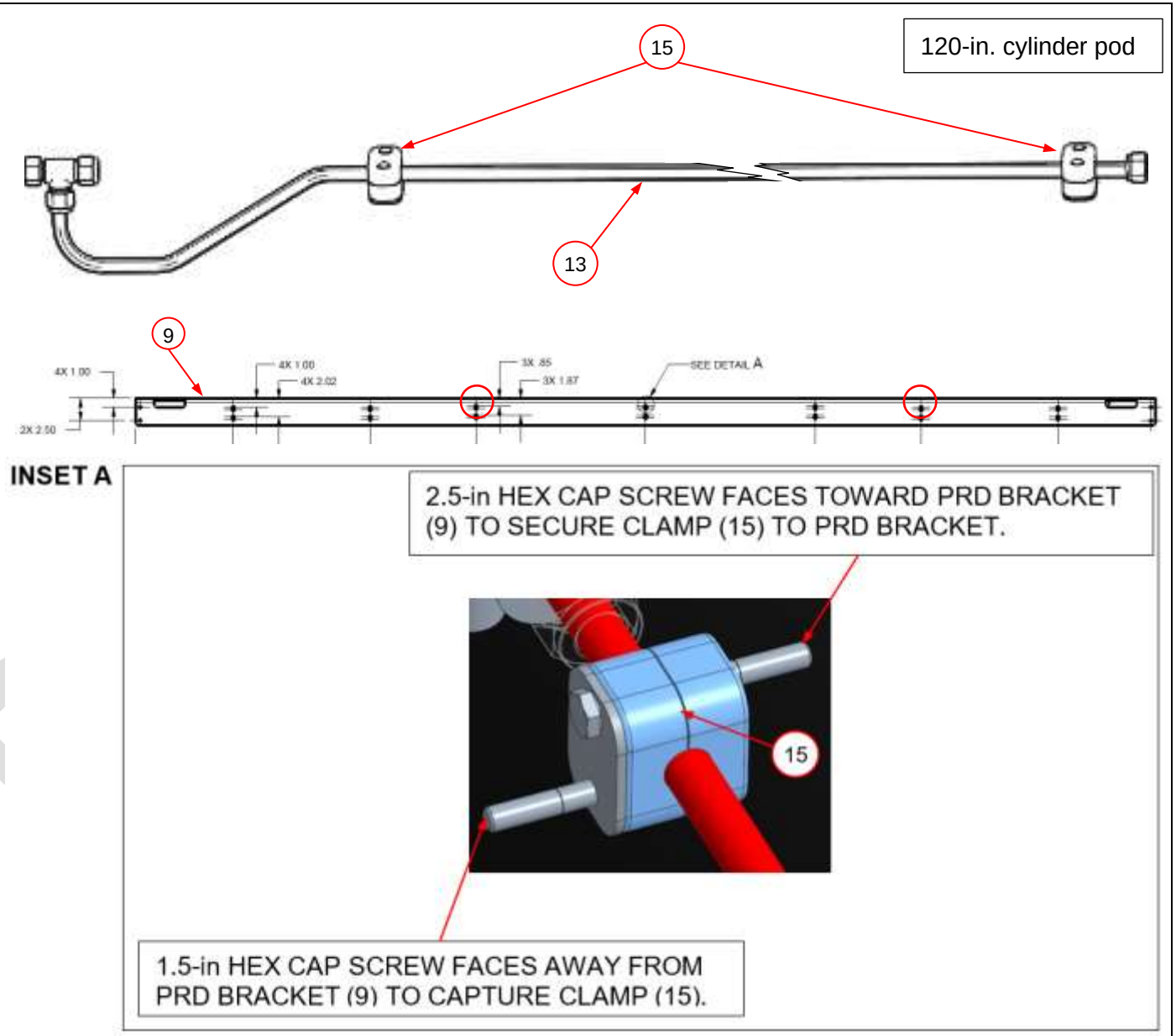
WHY	Support PRD tube.	

4	1. Install PRD vent supply tube (5d) nut fitting (a) on tee fitting (12) on PRD tube (13). **NOTICE** ***Tighten fitting (a) finger tight; fitting will be tightened at a later step.***	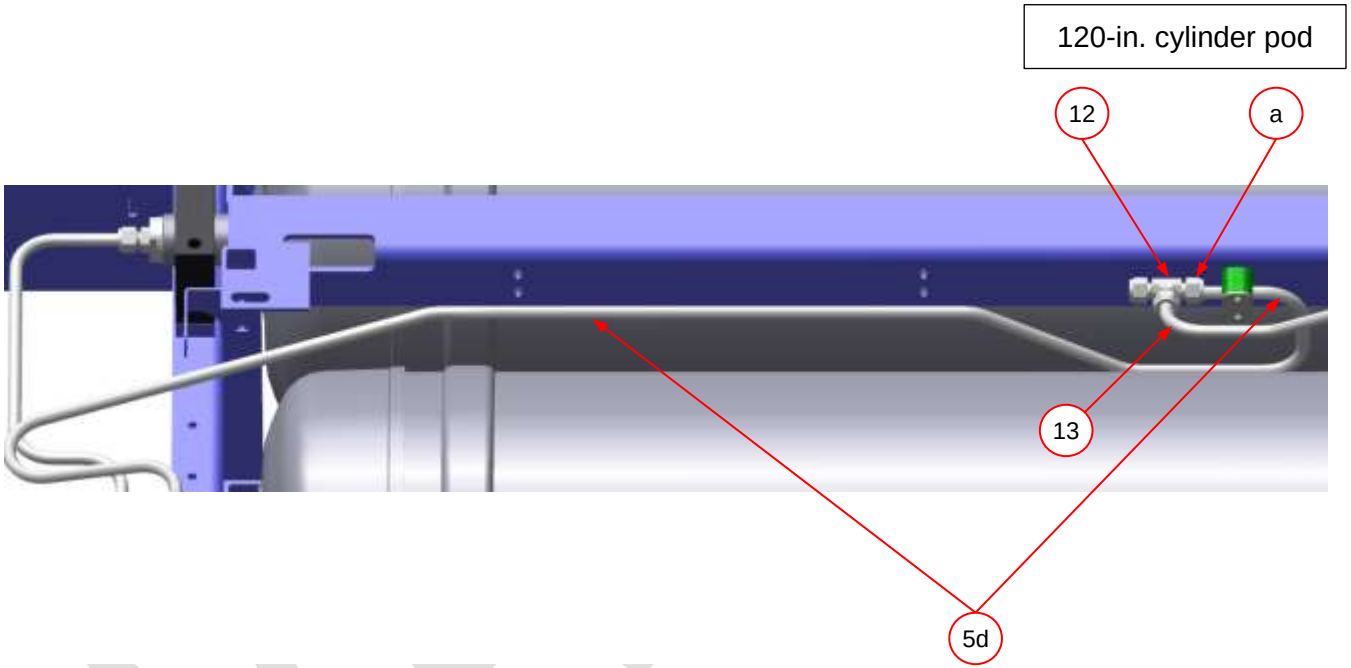
WHAT		
WHY		

5	
WHAT	**M** ***Always use a backing wrench on the main fitting while using a wrench to install another fitting.*** 1. Install tube adapter fitting (17), p/n 10200238 on VTI PRD (16b), p/n 10300513. **C** ***Torque fitting (17) to 26 ft-lbs (35.25Nm)*** 2. Install straight fitting (18), p/n 10200563, on VTI PRD (16a), p/n 10300513. 3. Install straight fitting (18), p/n 10200563, on VTI PRD (16a), p/n 10300513. **C** ***Torque fittings (18) to 18.5 ft-lbs (25Nm).*** 4. Install tube fitting (14), p/n 10200065, on VTI PRD (16a), p/n 10300513. **C** ***Torque fitting (14) to 45 ft-lbs (61Nm).***
WHY	

120-in. cylinder pod

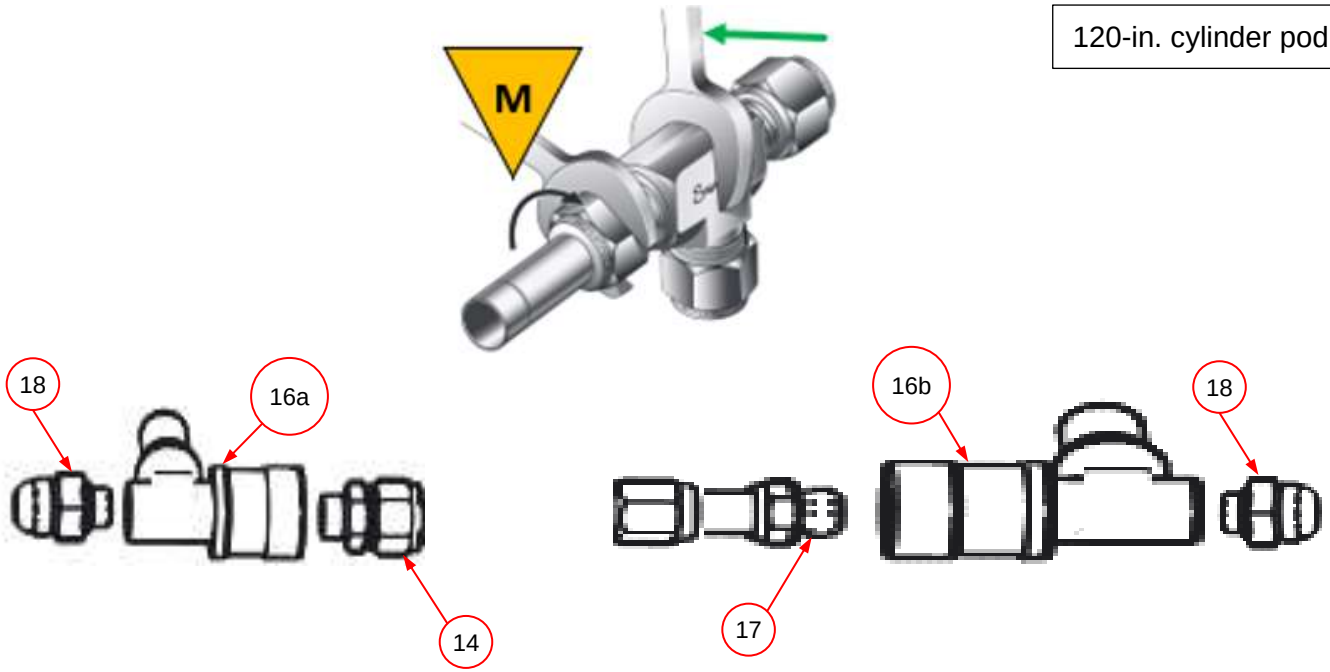

6		
WHAT	1. Install VTI PRD (16a) assembly inlet fitting (a) on PRD supply tube (13) at tee fitting (12). 2. Install VTI PRD (16b) outlet fitting (b) on straight end of PRD supply tube (13). **NOTICE** ***Tighten fittings finger tight; fittings will be torqued at a later step.***	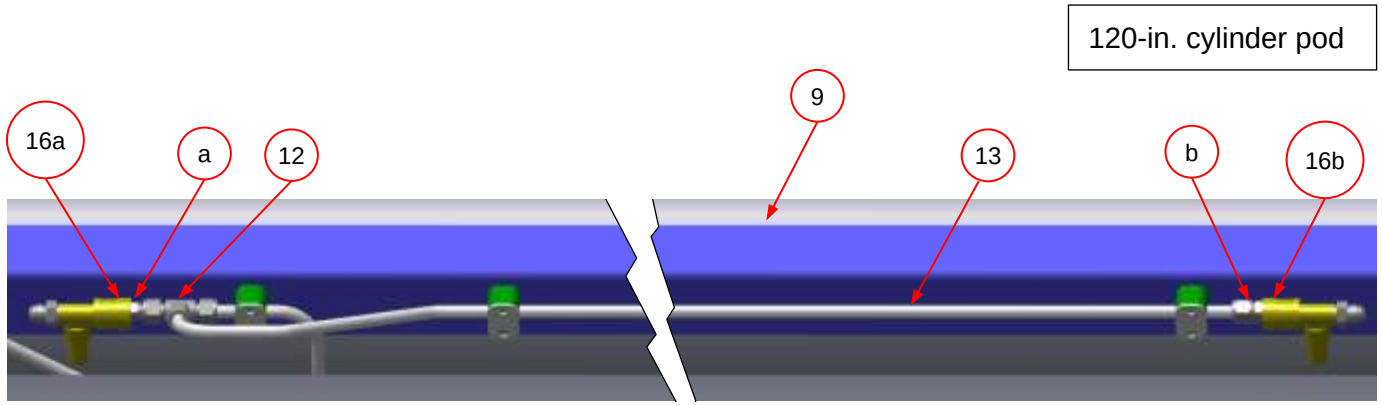
WHY		

DRAFT

7		
WHAT	1. Install PRD vent tube (28), p/n 25519028, on tee fitting (12). **NOTICE** ***Tighten fittings finger tight; fittings will be tightened at a later step.*** 2. Install two Tube Clamp Kits, 1/2-in., Double Mounting Hole (7), p/n 10701508, from retrofit kit on PRD vent tube (28), and PRD supply tube (5c). 3. Use dual tube clamp (7) fasteners *(not visible)* from to secure clamps to PRD bracket (9) at existing holes. **NOTICE** ***Tighten fasteners finger tight; fasteners will be tightened at a later step.***	120-in. cylinder pod 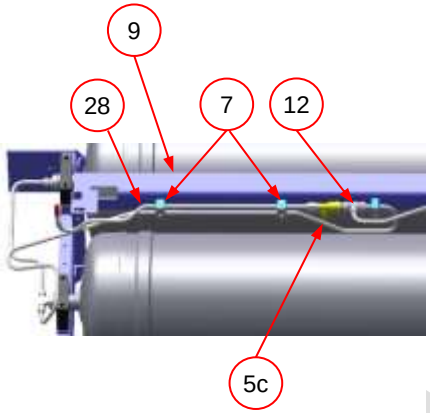
WHY		

8		
WHAT	1. Slip P-clip (8) removed earlier on PRD vent tube (28), p/n 25519028. 2. Secure P-clip (8) to P-clip bracket (b) using existing hardware. **NOTICE** ***Tighten fasteners finger tight; fasteners will be tightened at a later step.***	120-in. cylinder pod 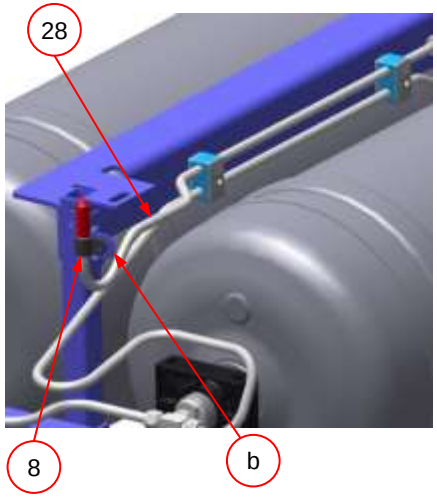
WHY		

DRAFT

9	1. Install nut fitting of PRD vent tube (37) on VTI PRD (16a) outlet fitting (a). **NOTICE** ***Tighten fitting finger tight; fitting will be tightened at a later step.*** 2. Install tube clamp kit (15), p/n 10701508, on PRD vent tube (37). 3. Use tube clamp kit (15) fasteners *(not visible)* from to secure clamp to PRD bracket (9) at existing hole using clamp kit fasteners as shown in INSET A. **NOTICE** ***Tighten fasteners finger tight; fasteners will be tightened at a later step.***	120-in. cylinder pod 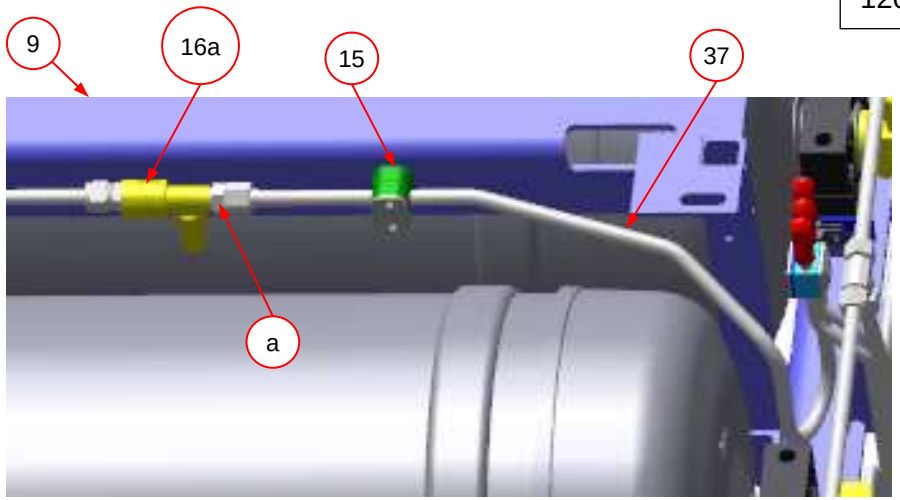 **INSET A** 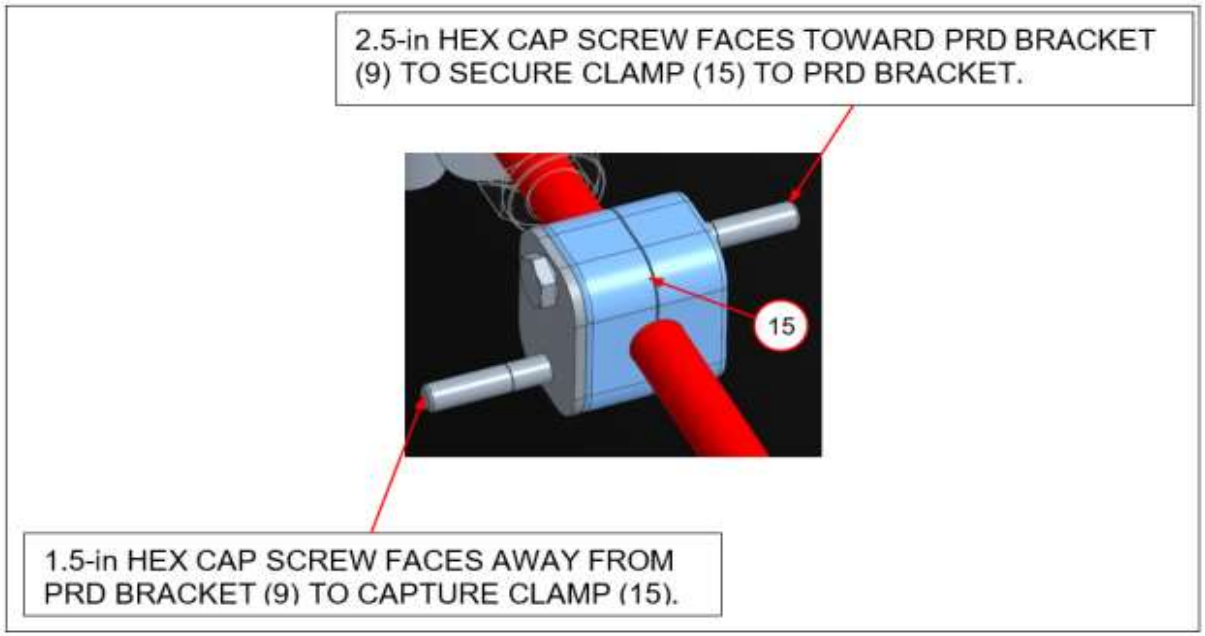
WHY		

10	1. Use two wrenches to tighten Swagelok® nut fittings in the following sequence: 1. (a) 2. (b) 3. (c) c ***Tighten Swagelok® fittings per Appendix B WI.0441.*** 2. Use two wrenches to tighten SAE / JIC fitting nuts in the following sequence: 1. (d) 2. (e) c ***Torque SAE / JIC fittings to* 45 ft-lbs (61Nm).** c 3. Verify vent ports (f) of VTI PRDs (16a) and (16b) are pointed down *(arrows).*	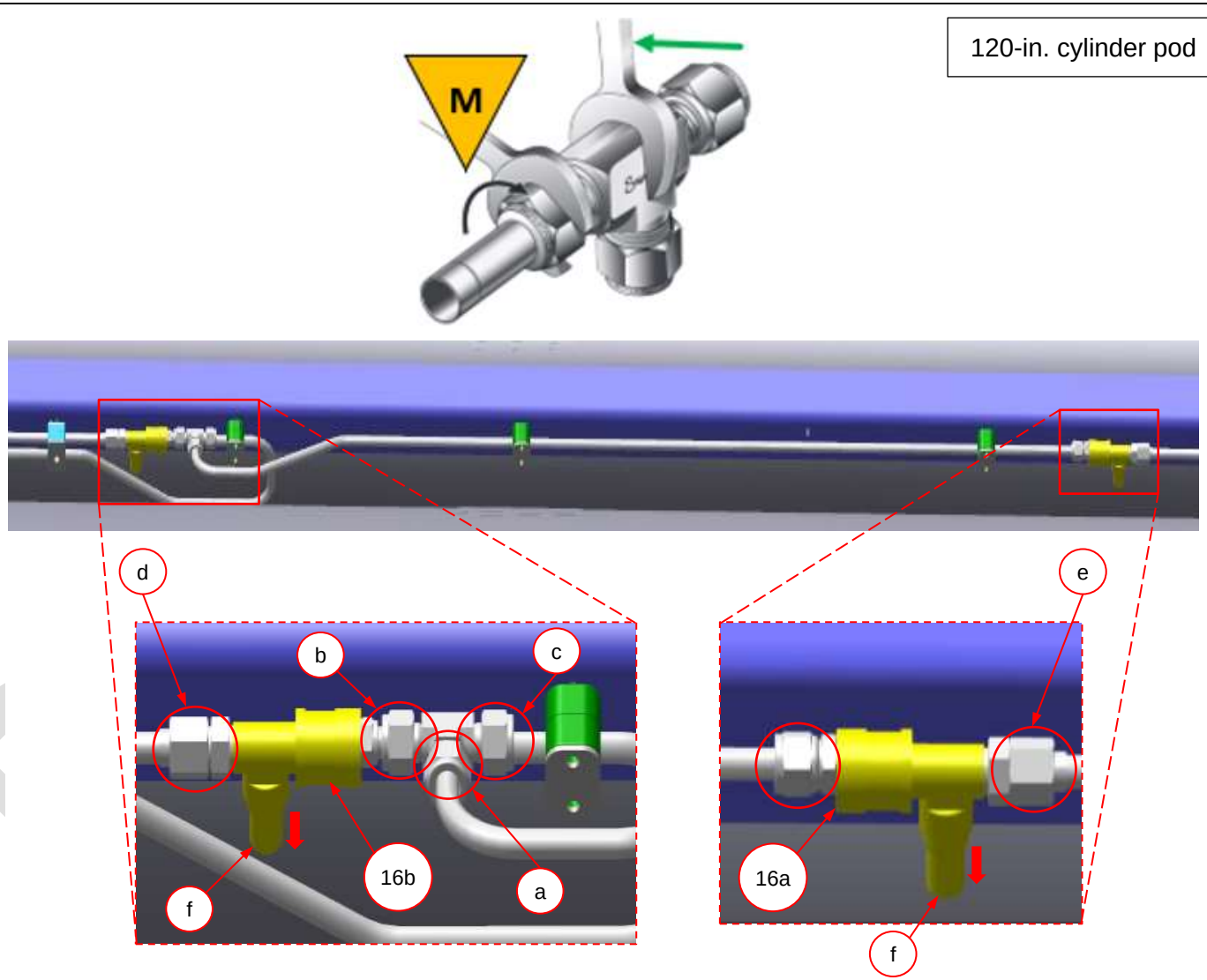
WHY	System specification.	

11	1. Install tube clamp bracket (23), p/n 25519123, on existing double tube clamp (8) using double tube clamp fasteners *(not shown).* **NOTICE** ***Tighten fasteners finger tight; fasteners will be tightened at a later step.*** 2. Slip P-clip (7), p/n 10702147, on PRD vent tube (37), p/n 25519037. 3. Install P-clip (7) on tube clamp bracket (23), p/n 25519123, using one hex cap screw, p/n 10760200-0100, one flat washer, p/n 10761000, and one flange top nut, p/n 10761300.	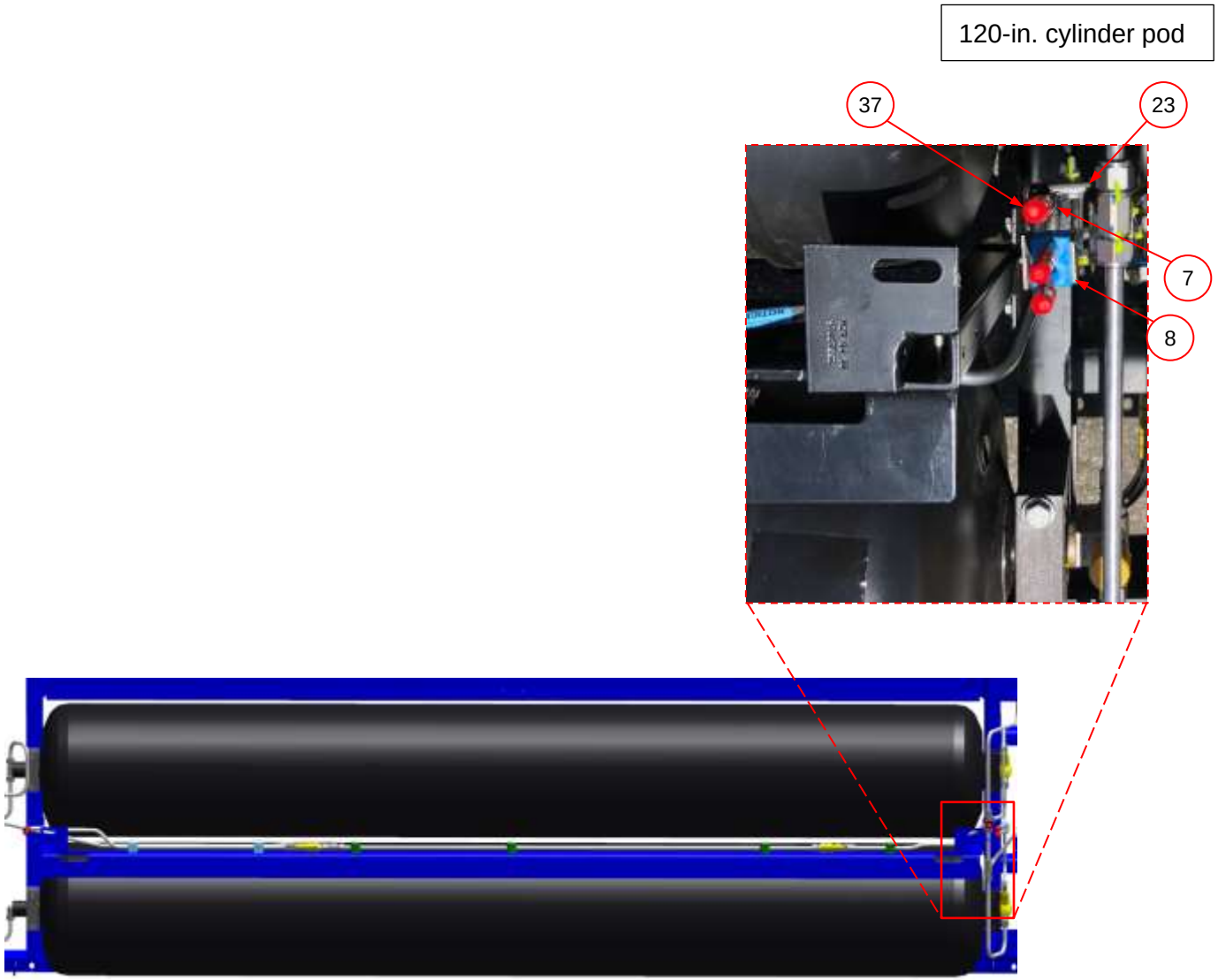
WHAT		
WHY	System specification.	

12		
WHAT	c Tighten clamp fasteners at all clamp locations *(circled)* using the following sequence: 1. (a) 2. (b) 3. (c) 4. (d) 5. (e) 6. (f) 7. (g) ***Tighten fasteners to* 8 ft-lbs (11Nm).**	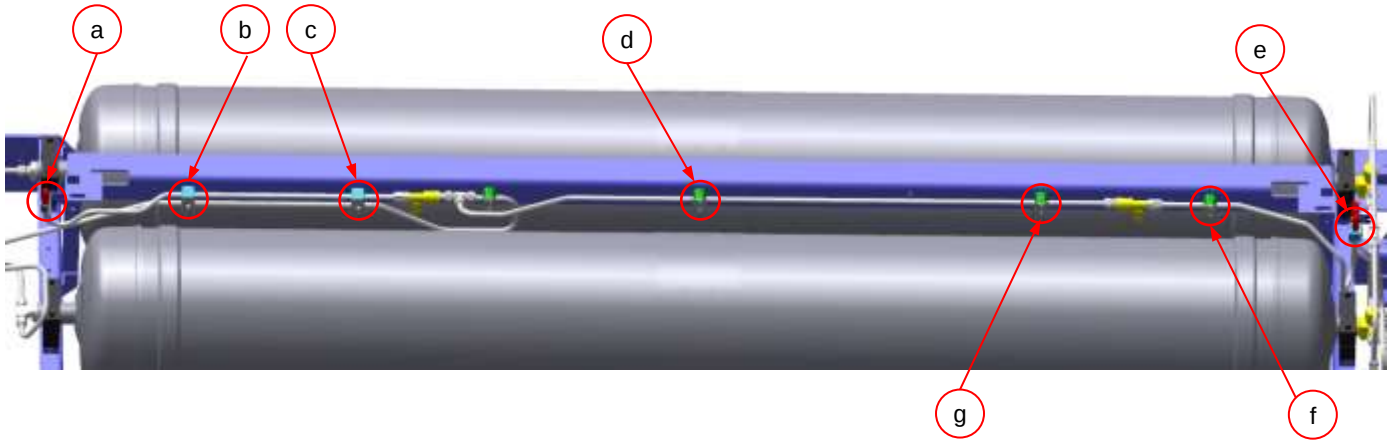
WHY	System specification. **NOTICE** ***Proper tightening sequence is crucial to fuel system integrity.***	

DRAFT

13		
WHAT	c 1. Verify clearance between PRD vent tubes (a) and live high pressure PRD vent tubes (b) is 3/8-in. minimum. c 2. Verify clearance between all system plumbing and cylinders (c) is 3/8-in. minimum. **NOTICE** ***If required: Adjust clamps as necessary and repeat Step 13.***	*NOTE: Plug end shown for reference; valve end similar.* 120-in. cylinder pod 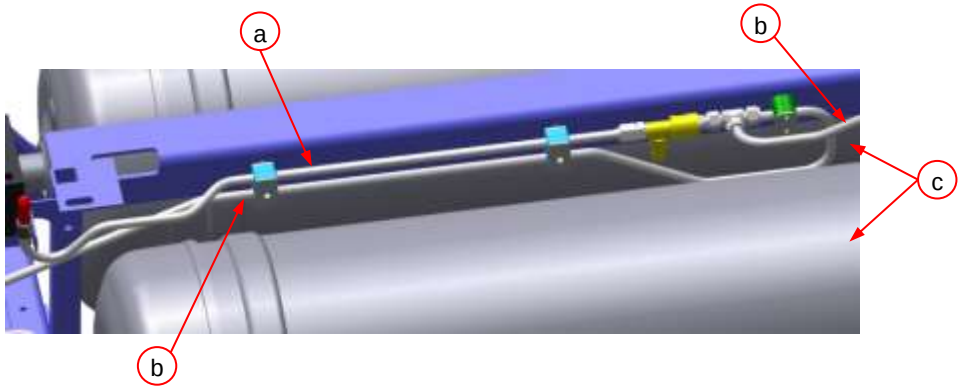
WHY	Prevent fuel line damage.	

DRAFT

14 WHAT	1. Install ferrules *(not visible)* and nut (a) from tee fitting (12), p/n 10200208, on PRD vent tube (13), p/n 25519416. 2. Install ferrules *(not visible)* and nut (b) from tube fitting (14), p/n 10200065, on straight end of PRD vent tube (13). 3. Install ferrules *(not visible)* and nut (c) from tee fitting (12), p/n 10200208, on tube adapter fitting, (17), p/n 10200238. **NOTICE** ***Refer to Appendix A: WI.0197 Manual Swaging of Swagelok Fittings.*** 4. Install tee fitting (12), p/n 10200208, on PRD vent tube, (13), p/n 25519416. **NOTICE** ***Tighten fitting finger tight; fitting will be tightened at a later step.***	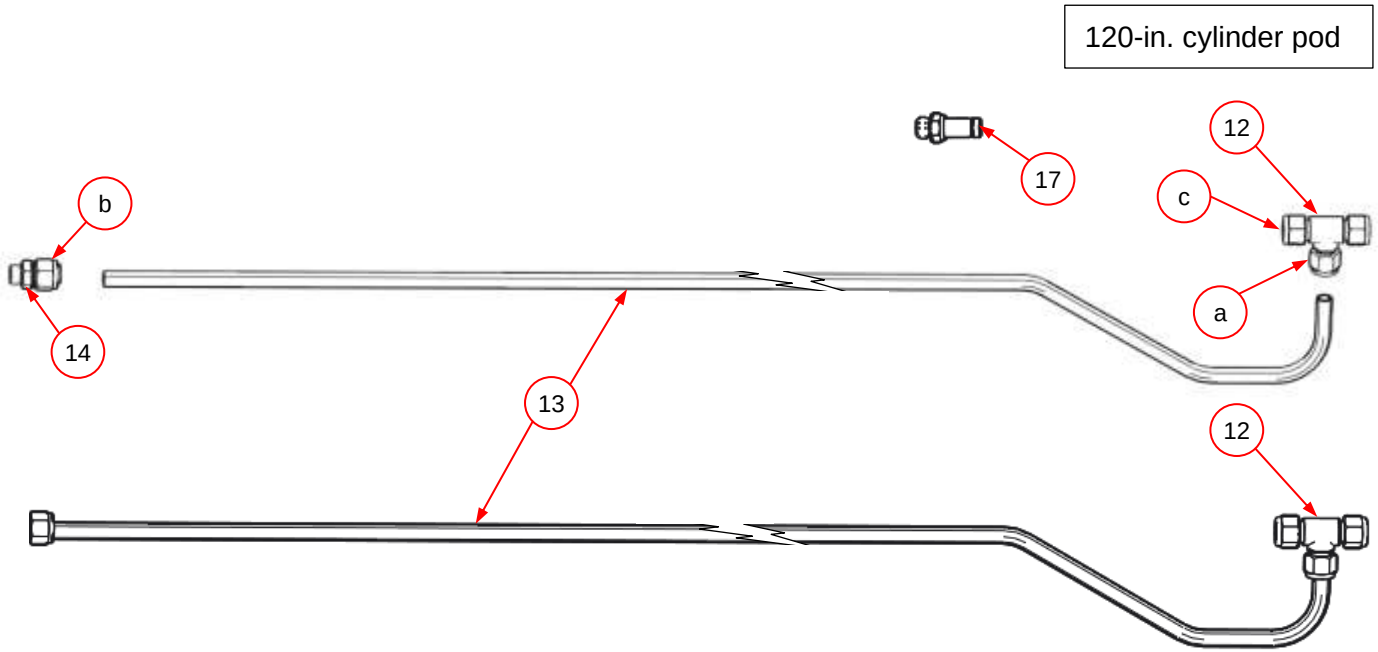
WHY		

15	
WHAT	1. Install two tube clamp kits (15), p/n 10701508, from retrofit kit on PRD tube, (13), p/n 25519417. 2. Insert one 1.5-in. hex cap screw (a), p/n 10760200-0150, and one 2.5-in. hex cap screw (b), p/n 10760200-0120, into each tube clamp kit (15), as shown in INSET A. 3. Install one flat washer, p/n 10761000, and one flange top nut, p/n 10763000 *(not shown)* on each hex cap screw inserted in previous sub step. 4. Secure PRD vent tube (13) to PRD bracket (9) at existing holes *(circled).* **NOTICE** ***To ease component installation, do not tighten fasteners completely; fasteners will be torqued at a later step.***
WHY	Support PRD vent lines.

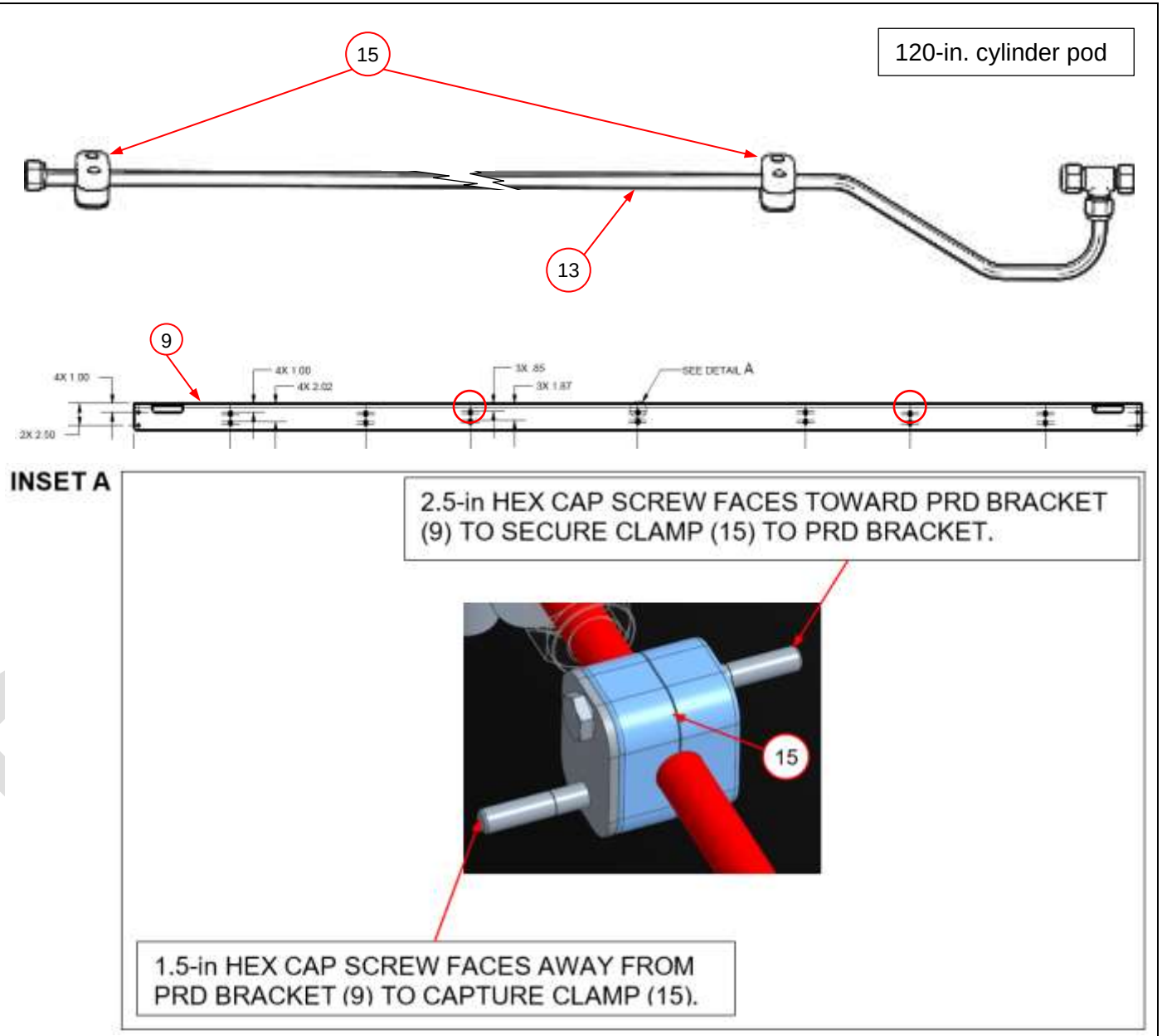

16	Install PRD vent supply tube (5d) on tee fitting (12) at nut fitting (a). **NOTICE** ***Tighten fitting (a) finger tight; fitting will be tightened at a later step.***	120-in. cylinder pod
WHAT		
WHY		

DRAFT

17	
WHAT	**M** ***Always use a backing wrench on the main fitting while using a wrench to install another fitting.*** 1. Install tube adapter fitting (17), p/n 10200238 on VTI PRD (16b), p/n 10300513. **C** ***Torque fitting (17) to 26 ft-lbs (35.25Nm)*** 2. Install straight fitting (18), p/n 10200563, on VTI PRD (16a), p/n 10300513. 3. Install straight fitting (18), p/n 10200563, on VTI PRD (16a), p/n 10300513. **C** ***Torque fittings (18) to 18.5 ft-lbs (25Nm).*** 4. Install tube fitting (14), p/n 10200065, on VTI PRD (16a), p/n 10300513. **C** ***Torque fitting (14) to 45 ft-lbs (61Nm).***
WHY	

120-in. cylinder pod

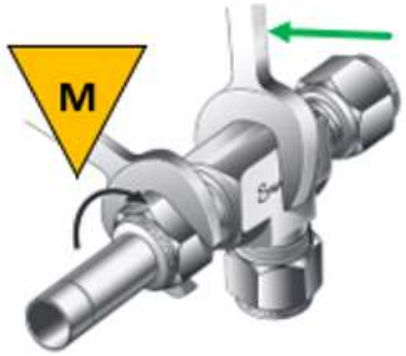

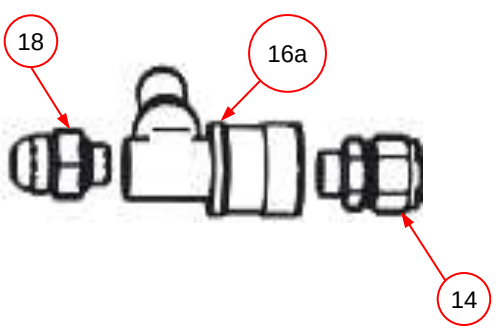

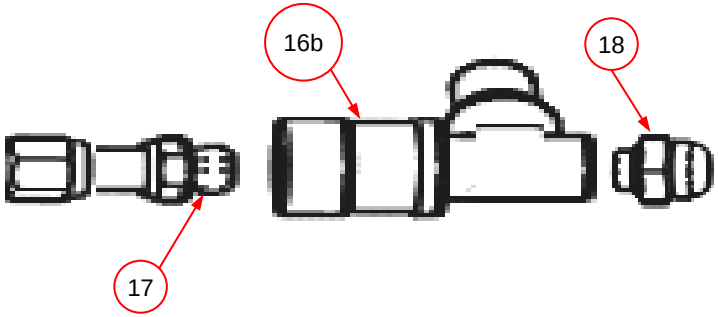

18		
WHAT	1. Install VTI PRD (16a) assembly inlet fitting (a) on PRD supply tube (13) at tee fitting (12). 2. Install VTI PRD (16b) outlet fitting (b) on straight end of PRD supply tube (13) nut fitting. **NOTICE** ***Tighten fittings finger tight; fittings will be torqued at a later step.***	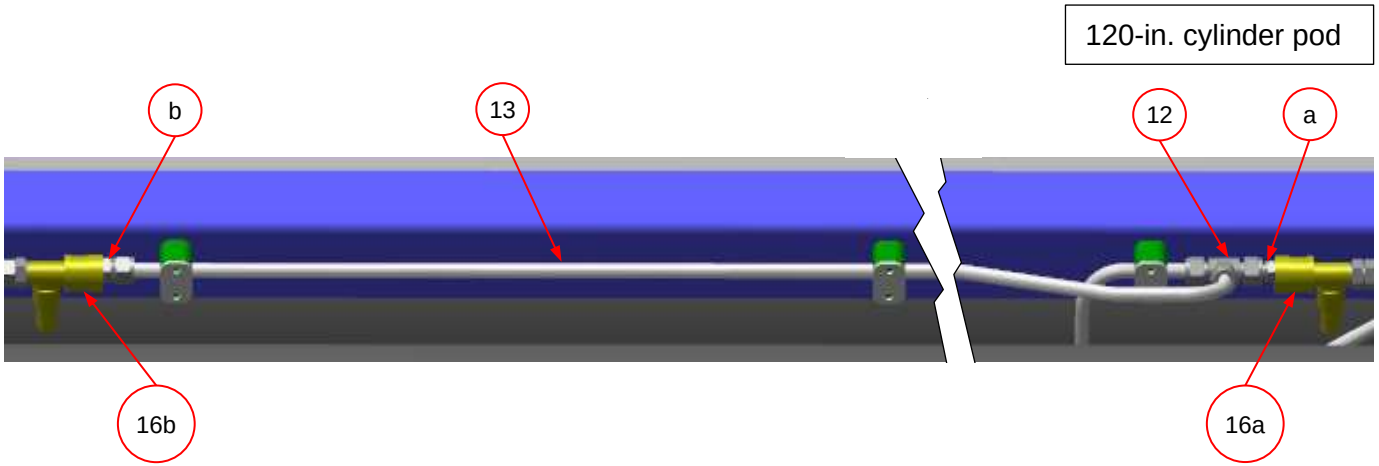
WHY		

DRAFT

19	1. Install PRD vent tube (29), p/n 25519027, on VTI PRD (16b) fitting (a). **NOTICE** ***Tighten nut fitting finger tight; fittings will be tightened at a later step.*** 2. Slip two dual tube clamps (8) on PRD vent tube (29), and on PRD supply tube (5d). 3. Use dual tube clamp (8) fasteners *(not visible)* to secure two clamps (8) and two plates (6), to PRD bracket (9) at hole *(circled).* 4. Slide P-clip (7) on PRD vent tube (29) and use existing fastener to secure P-clip (7) to P-clip bracket (b). **NOTICE** ***Tighten fasteners finger tight; fasteners will be torqued at a later step.***	120-in. cylinder pod 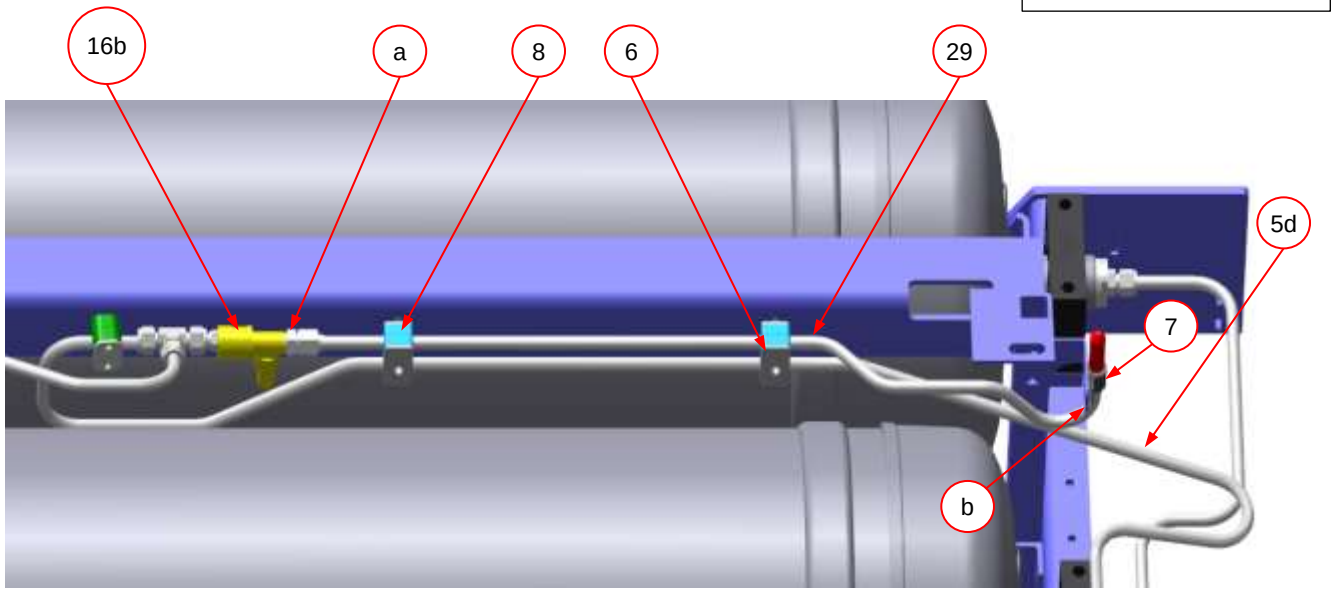
WHY		

DRAFT

20	1. Install nut fitting (b) of PRD vent tube (38) on VTI PRD (16a) outlet fitting (a). **NOTICE** ***Tighten fitting finger tight; fitting will be tightened at a later step.*** 2. Install tube clamp kit (15), p/n 10701508, on PRD vent tube (38). 3. Use tube clamp kit (15) fasteners *(not visible)* from to secure clamp to PRD bracket (9). **NOTICE** ***Tighten fasteners finger tight; fasteners will be tightened at a later step.***	120-in. cylinder pod 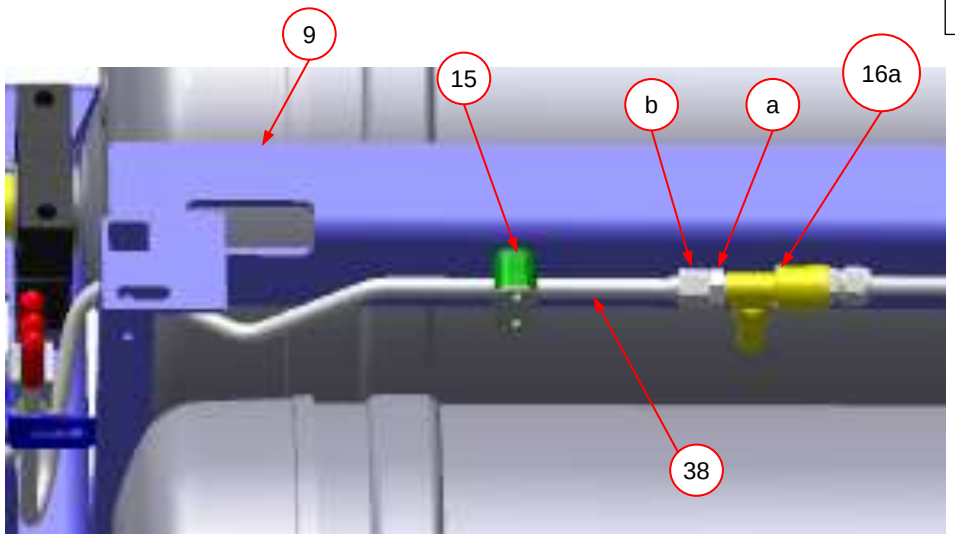
WHAT		
WHY		

DRAFT

21		
WHAT	c A. Use two wrenches to tighten 1/2-in. Swagelok® nut fittings at four locations in the following sequence: 1. (a) 2. (b) 3. (c) 4. (d) ***Tighten 1/2-in. Swagelok® nut fittings per Appendix B WI.0441.*** c B. Verify vent ports (f) of VTI PRDs (16a) and (16b) are pointing down *(arrows).*	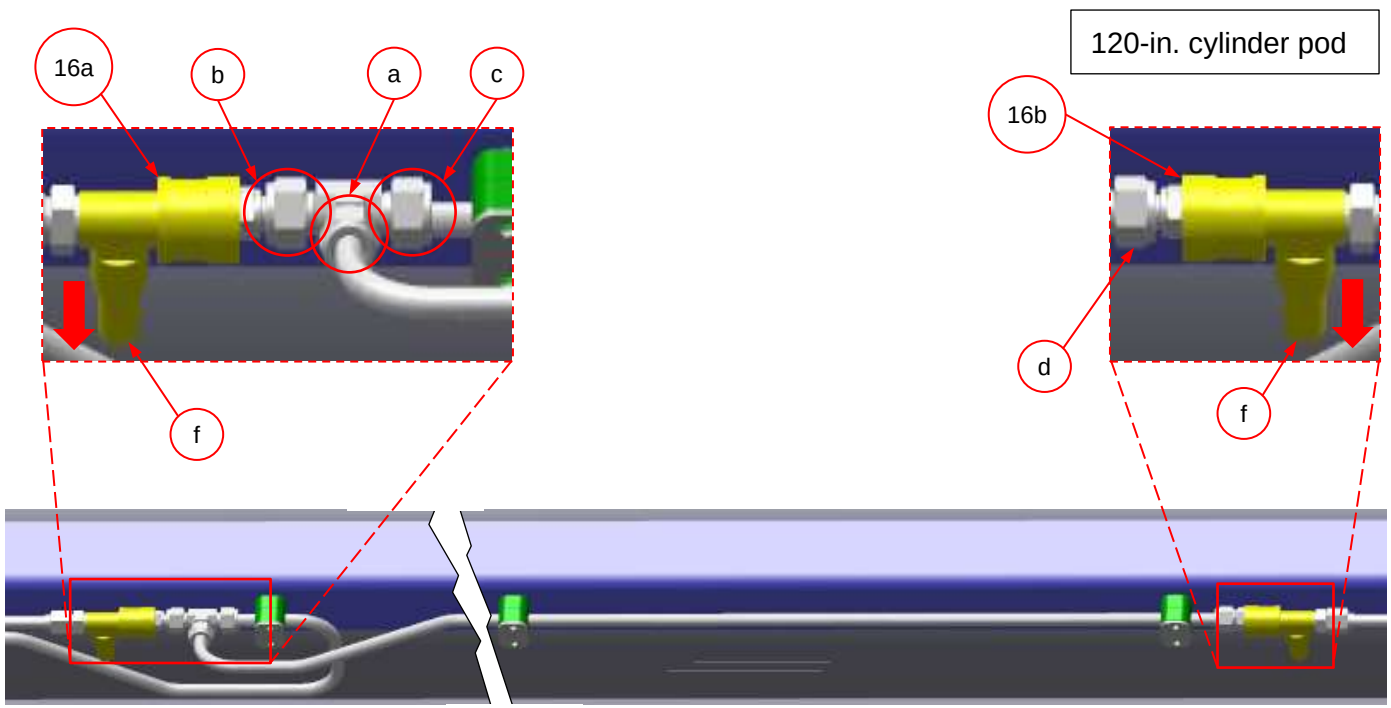
WHY	System specification.	

22	c Use two wrenches to tighten SAE / JIC fittings at two locations *(circled)* in the following sequence: 1. (a) 2. (b) ***Tighten SAE / JIC fittings to* 45 ft-lbs (61Nm).**	120-in. cylinder pod
WHY	System specification.	

DRAFT

23	
WHAT	1. Install tube clamp bracket (23), p/n 25519123, on existing double tube clamp (7) using double tube clamp fasteners *(not shown).* 2. Slip P-clip (8), p/n 10702147, on PRD vent tube (38), p/n 25519038. 3. Install P-clip (8) on tube clamp bracket (23), p/n 25519123 using one hex cap screw, p/n 10760200-0100, one flat washer, p/n 10761000, and one flange top nut, p/n 10761300. **NOTICE** ***Tighten fasteners finger tight; fasteners will be tightened at a later step.***
WHY	System specification.

120-in. cylinder pod

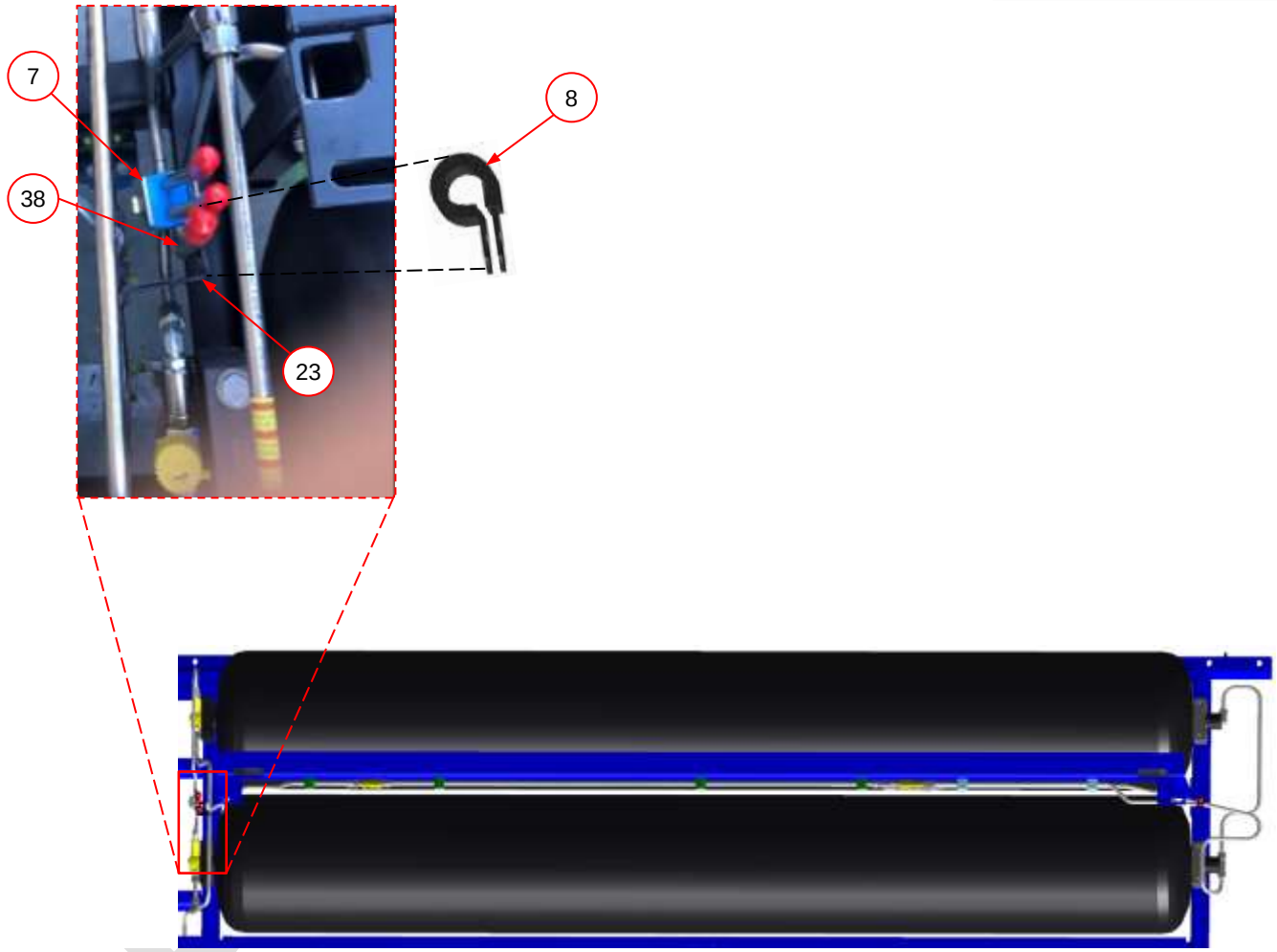

24	c Tighten clamp fasteners at all clip and clamp locations *(circled)* using the following sequence: 1. (a) 2. (b) 3. (c) 4. (d) 5. (e) 6. (f) 7. (g) ***Tighten fasteners to 8 ft-lbs (11Nm).***	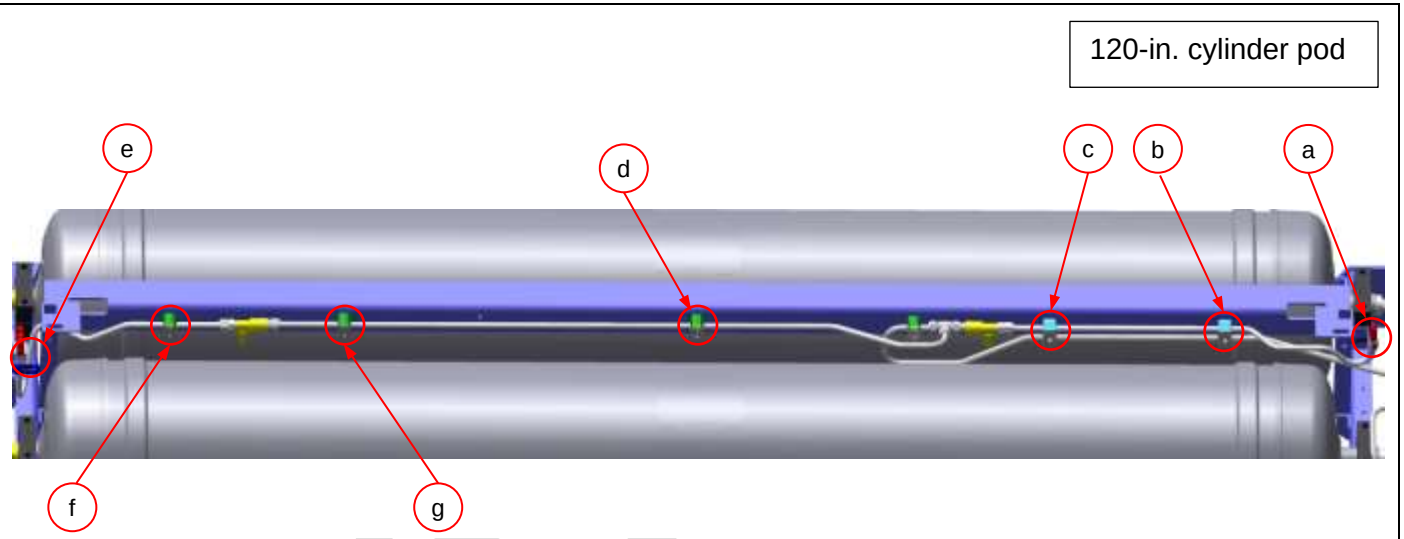
WHY	System specification. **NOTICE** ***Proper tightening sequence is crucial to fuel system integrity.***	

DRAFT

25		
WHAT	c 1. Verify clearance between PRD vent tubes (a) and live high pressure PRD supply tubes (b) is 3/8-in. minimum. c 2. Verify clearance between all system plumbing and cylinders (c) is 3/8-in. minimum. **NOTICE** ***If required: Adjust clamps as required and repeat Step 25.***	*NOTE: Plug end shown for reference; valve end similar.* 120-in. cylinder pod 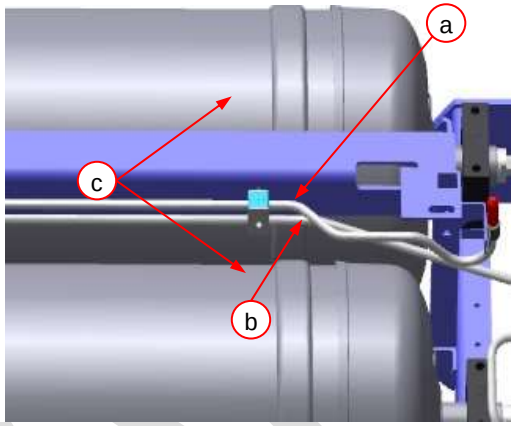
WHY	Prevent fuel line and cylinder damage.	

DRAFT

26	c Apply quantity four Decal, System, Danger Live High Pressure PRD Line (a), p/n 10602157, to PRD supply tubes as indicated.	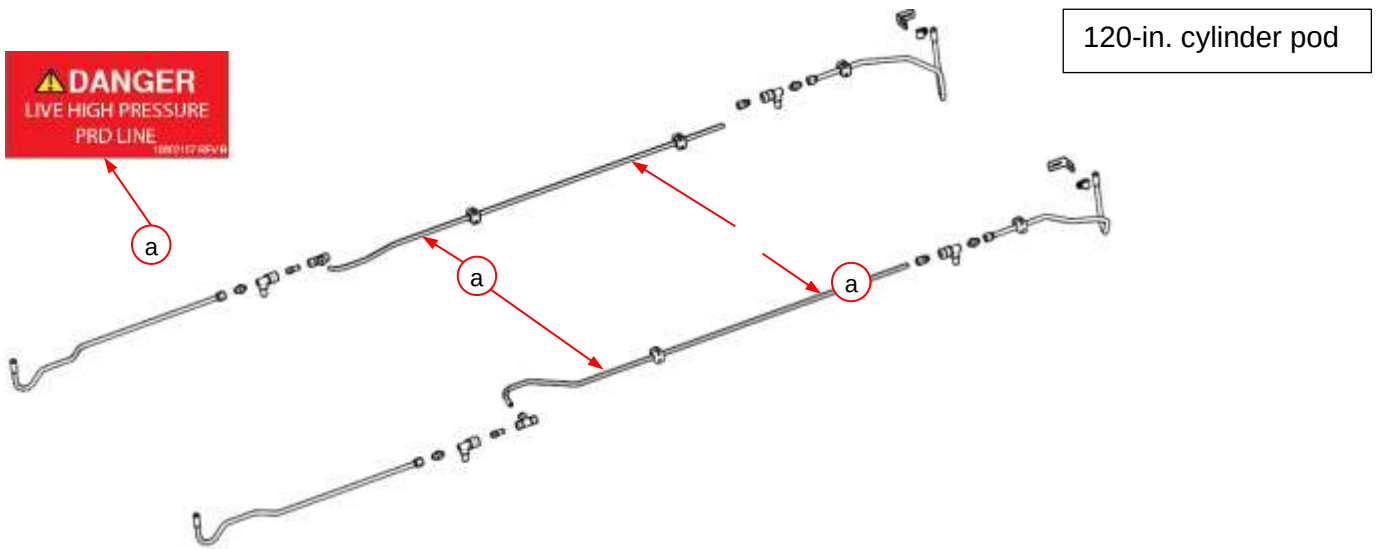
WHAT		
WHY	Operator and first responder safety.	
27	c Apply quantity four Decal, PRD Vent Line, Caution (b), p/n 10602442, to midpoint of PRD vent tubes as indicated.	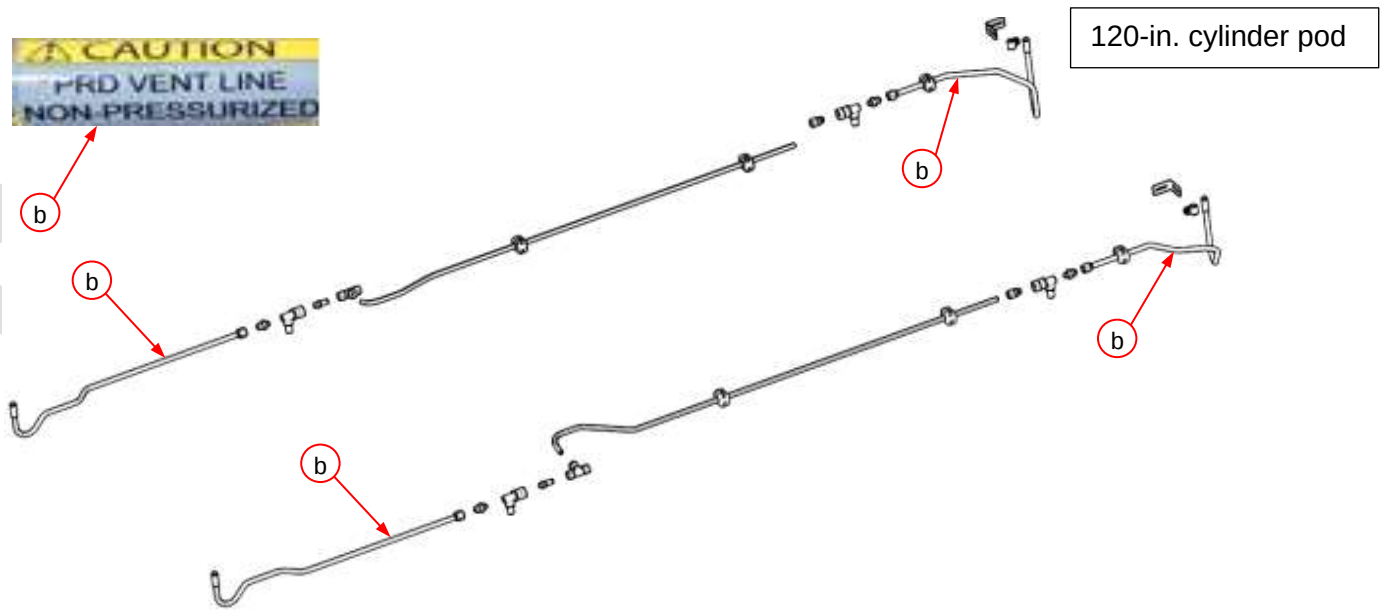
WHAT		
WHY	Operator and first responder safety.	

5.6. Check PRD vent tube outlet clearance

1			2		
WHAT	c 1. Gently close one fuel system roof pod door. 2. Visually verify proper clearance between plug end PRD vent tube cap (f) and door opening *(circled).* 3. Visually verify proper clearance between valve end PRD vent tube caps (f) and door opening *(circled).* **WARNING** ***PRD vent tubes cannot protrude above the top of the pod door.*** If PRD vent tube caps protrude above the pod door opening, fuel system plumbing must be adjusted to achieve proper clearance. **NOTICE** ***Verify all PRD vent tube caps are installed.***	 	WHAT	Repeat Step 1 for each roof pod door.	
WHY	Verify proper PRD vent tube position.		WHY	Verify proper PRD vent tube position.	

DRAFT

5.7. System Leak Check Procedure

1		
WHAT	1. Turn 1/4-turn manual shut off valve (3) on the FMM (2) to the OPEN position. **⚠WARNING** 2. Select the appropriate CNG fuel nozzle and/or adaptor for the FMM (2) fuel fill receptacle (not visible). 3. Remove fuel fill receptacle dust cap (f). 4. Begin fueling the vehicle with CNG using a regulated fuel supply. **C** ***Open nozzle valve slowly and regulate gas delivery to prevent connector from icing and reducing or blocking fuel flow.*** **⚠WARNING** ***Follow all local and facility fueling regulations and procedures.***	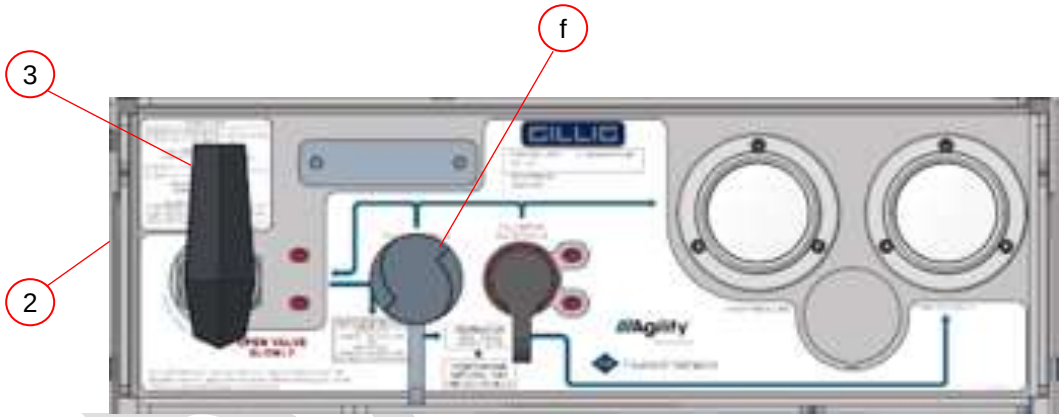
WHY	Test fuel system integrity.	

DRAFT

2	Monitor FMM (2) high pressure gauge (b) to verify when system pressure reaches 500 psi to 510 psi (3.45MPa to 3.52MPa) and stop pressurization. **⚠WARNING** ***1. If a hissing sound is heard coming from fuel system fittings during filling, stop the fill immediately.*** ***2. Try to isolate the sound and spray Swagelok Snoop® on the suspected location to check for bubble formation.***	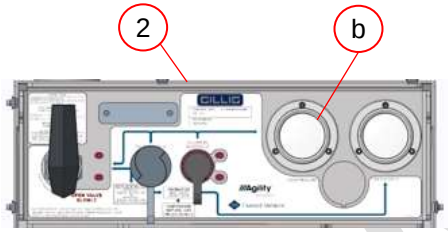	3	c Leak test all fuel and PRD tubes and fitting connections using Swagelok Snoop® leak detection solution or equivalent.	
WHY	Subjects fuel system to partial operating pressure.		WHY	Approved leak detection solution for visual inspection of system leaks.	

DRAFT

4	WHAT	1. Begin at one end the of the fuel system and work methodically to spray all fuel line fittings with Swagelok Snoop® or equivalent. 2. Allow at least 10 minutes to elapse before checking the integrity of fitting connections.		5	WHAT	If a leak is audible or icing, condensation, foam, or bubbles appear at a fitting connection the fitting connection must be inspected. **⚠WARNING** ***Fuel system must be defueled prior to investigating any leak. Refer to Agility® publication ENP-729 to defuel system.***	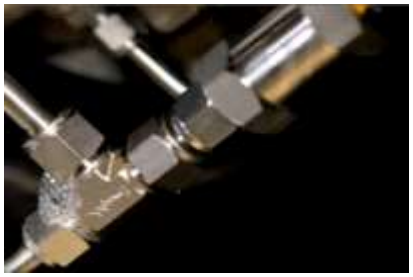
	WHY				WHY		
6	WHAT	Re-tighten leaking fitting(s) discovered during Step 5. C ***1. For JIC fittings, refer to p/n specific tightening instructions.*** ***2. For compression fittings, tighten fitting according to Appendix B.***	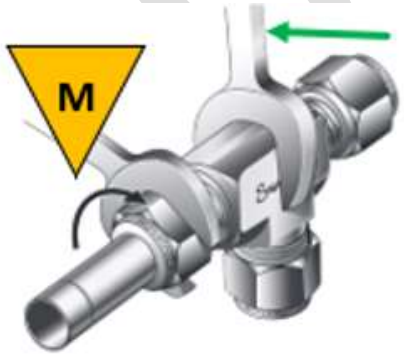	7	WHAT	Repeat Steps 1 and 2 to repressurize the system.	
	WHY				WHY		

DRAFT

8	Spray leaking fitting again with Swagelok Snoop® or equivalent and allow at least 10 minutes to elapse before checking for bubble formation.		9	C *If leaking fitting is fixed,* proceed to test any remaining fitting connections.	
WHAT			WHAT		
WHY			WHY		
10	**WARNING** *If leak is not fixed,* the fuel system must be defueled to replace the fitting. C ***Perform OEM defuel procedure.***		11	Inspect tubing, fittings, ferrules, and nuts at the site of the leak for perforations, cracks, assembly defects, or other damage. C ***Any damaged components must be replaced.***	
WHAT			WHAT		
WHY			WHY		
12	Replace any related components at the fitting junction as required. C ***Follow fitting installation directions in Appendix 2.***		13	Repressurize fuel system by repeating Step 1 and Step 2.	
WHAT			WHAT		
WHY			WHY		

DRAFT

14	WHAT	C Spray new fitting junction with Swagelok Snoop® or equivalent to retest for leaks.		15	WHAT	Turn FMM 1/4-turn manual shut off valve (3) counterclockwise to the OPEN position.	
	WHY				WHY	Allow fuel into system.	
16	WHAT	C Repeat pressure test procedure stopping the fill when fuel system pressure reaches 2000 psi to 2100 psi (13.79MPa to 14.48MPa).		17	WHAT	C Repeat pressure test procedure stopping the fill when fuel system pressure reaches 3600 psi to 3700 psi (24.8MPa to 25.5MPa) and repeat leak checking all connections until the entire fuel system is confirmed leak free.	
	WHY	Subjects fuel system to partial operating pressure.			WHY	Subjects fuel system to full operating pressure.	
18	WHAT	C *If fuel system is leak free or if defueling is required,* close flow valve on CNG dispense nozzle *(not shown)* and carefully disconnect fill nozzle *(not shown)* from FMM (2) fuel fill receptacle (a).	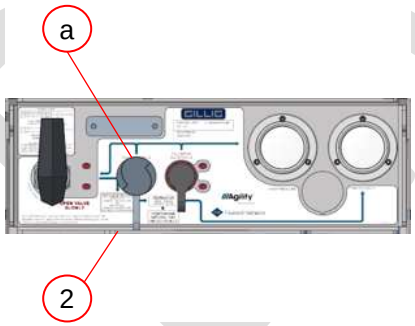	19	WHAT	Replace dust cap (f) on FMM (2) fuel fill receptacle (a).	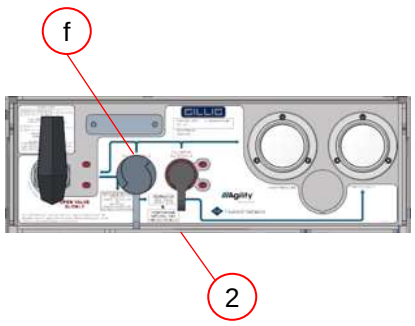
	WHY				WHY	Vehicle will not start if dust cap is not in place.	

20	WHAT	*If not open,* turn FMM (2) 1/4-turn manual shut off valve (3) counterclockwise to the OPEN position.	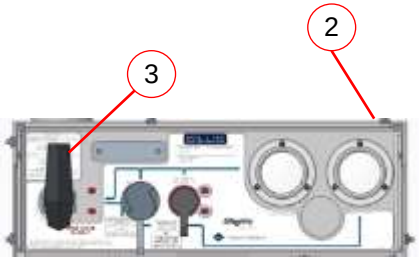	21	C Clean Swagelok Snoop® or equivalent from the fuel system.
	WHY	Allow gas to flow throughout fuel system.			WHY Customer satisfaction.
22	WHAT	C When the pressure test is completed successfully, use form FT.0323 (c) to record the result and the date on which the fuel system passed the 3600 psi test.	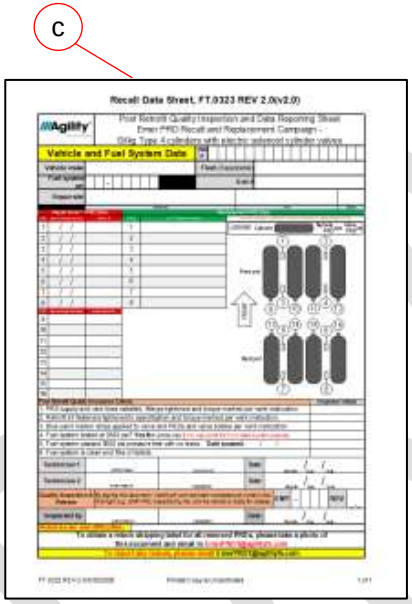	23	C Apply Torque Seal (a) to all fitting junctions (b).
	WHY	Verify safe and proper fuel system pressure specification.			System quality specification.

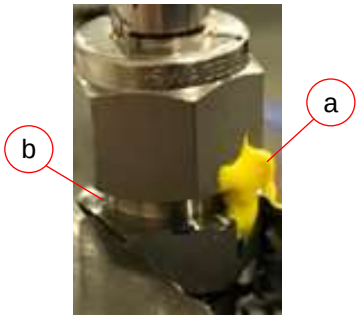

DRAFT

5.8. Reporting and Return Procedure

1	
WHAT	c 1. Use form FT.0323 (c) to record the following data for each VTI™ replacement PRD (16): C. Serial number (a) D. Location of each VTI™ PRD *(circled)*, within the fuel system. 2. Inspect fuel system repairs per the quality assurance criteria specified in FT.0323. **NOTICE** *Use a flashlight to aid data identification and inspection in low light.* 3. Use a camera or camera phone to take a photo of completed form FT.0323 (c). 4. Submit photo of completed form FT.0323 (c) to the email address indicated on the form to receive a Return Material Authorization (RMA) shipping label.
WHY	Required for retrofit kit component and repair tracking and, if applicable, installer reimbursement.

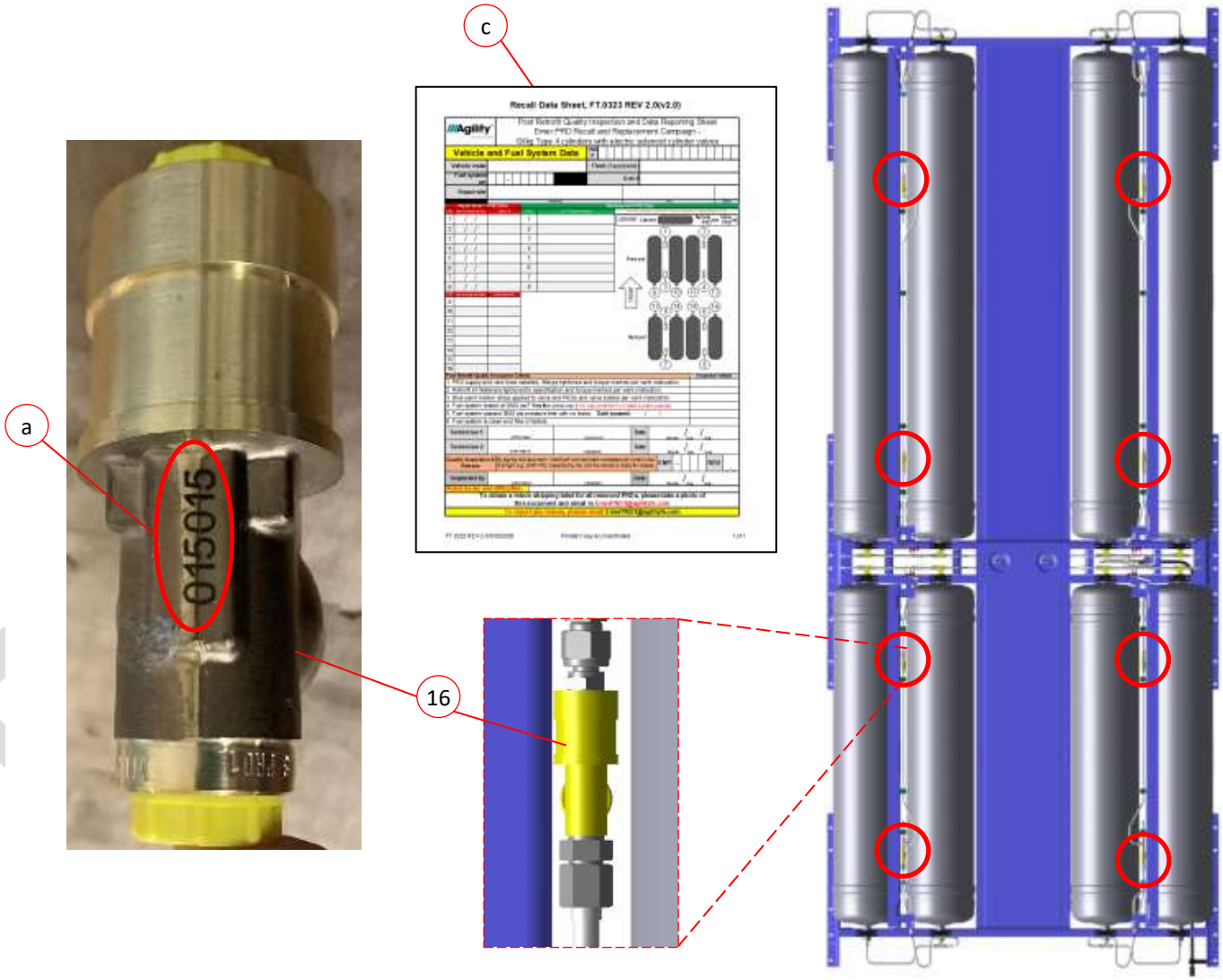

2	Repeat Section 5. Corrective Action / Procedure for all vehicles subject to the Emer™ PRD recall on hand until all repairs are complete.		3	c 1. Pack all removed PRDs (still bagged by VIN), in one box. If the quantity of PRDs is too large for a single box, use additional boxes but ship them all using the same RMA. *If possible:* reuse the box in which the replacement PRDs were shipped. 2. Apply RMA label obtained from Agility® to the box. 3. Use a permanent marker to write RMA number on exterior of each shipping box.	
WHY			WHY	Required for repair return tracking and, if applicable, installer reimbursement.	

DRAFT

Appendix A. WI.0197 Manual Swaging of Swagelok Fittings

Manual Swaging of Swagelok Fittings

Scope: Manual swaging of Swagelok fittings onto:

- 1/4", 3/8" and 1/2" OD tubing (Steps 1-10)
- Swagelok port connectors and port adaptors (Steps 4-10 only)

Standard Work Instruction

1	WHAT	Place tube end fully into depth marking tool (DMT). Mark the tube with a fine-tipped Sharpie. M	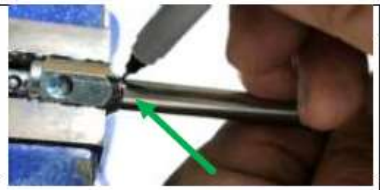	2	WHAT	Use magnification to verify that nut and ferrules have Swagelok markings (NOT Parker). C
	WHY	The DMT line corresponds to the nut's location after swaging in step 8.			WHY	Swagelok fittings and ferrules may NOT be interchangeable with other manufacturers. They may not swage or seal properly.
3	WHAT	Install nut and ferrules onto the tube. Verify that they are in the proper order and orientation. C	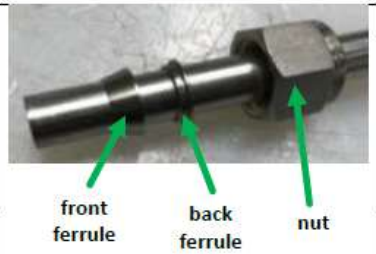	4	WHAT	At the beginning of the shift, use magnified ring light and fingertip to inspect swaging die for damage, pitting and debris. If damaged, replace the die. If dirty, clean by hand with a nylon brush and cloth.
	WHY	This is critical for proper swage strength and leak-tightness.			WHY	A damaged or dirty swaging die could lead to damage to the ferrule or nut.
5	WHAT	Insert tube into swaging die. Verify that tube is bottomed out. DMT line should NOT be visible.		6	WHAT	While holding tube in place within the pre-swaging tool, hand tighten the nut. The nut should turn freely. If the nut does not turn freely, the die (or nut) must be cleaned or replaced.
	WHY	If tube is not fully seated, ferrules will be swaged in incorrect location on tube. S			WHY	The tube must be held in place to prevent it from backing out during pre-swaging. If the nut does not turn freely the swaging die is likely damage or worn, which could prevent the tube from being swaged properly.

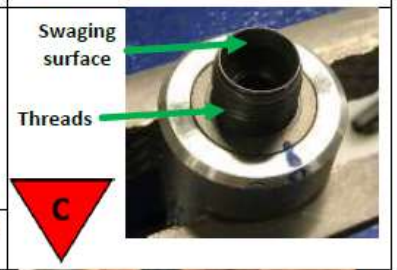

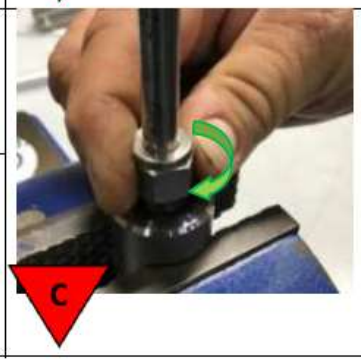

7	WHAT	Mark the nut and die with a fine-tipped sharpie at the 6 o'clock position. M		8	WHAT	While holding tube against the die, tighten the nut 1-1/4 turns (to the 9 o'clock position). C	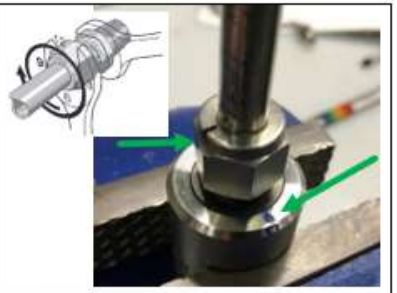
	WHY	These black marks are needed to control step 8.			WHY	Less than 1-1/4 turns can cause a leak.	
9	WHAT	Verify DMT line on tube is fully exposed above nut. If the DMT line is not exposed, turn up to 1/8 turn more and recheck. If line is still not visible, then scrap the tube. C		10	WHAT	Remove the tube from the swaging die by gently moving tube side to side. If excessive force is needed to remove the tube, the swaging die should be replaced. M	
	WHY	If DMT line is not "high enough", either tube is not seated enough in DMT, OR not swaged far enough (due to hand tightening variation).			WHY	Excessive force to remove the tube may indicate that the swaging die is worn, which could cause an under swaged condition.	

Equipment List:

Description	Manufacturer	Manufacturer's Part Number
1/4" Non-Gaugable Pre-Swaging Die	Swagelok	MS-ST-400
3/8" Non-Gaugable Pre-Swaging Die	Swagelok	MS-ST-600
1/2" Non-Gaugable Pre-Swaging Die	Swagelok	MS-ST-810
Ultra-Fine Point Permanent Black Marker	Sharpie	37001
1/4" Depth marking tool	Swagelok	MS-DMT-400
3/8" Depth marking tool	Swagelok	MS-DMT-600
1/2" Depth marking tool	Swagelok	MS-DMT-810
1.75X Ring Light	Any	---
Open-ended wrenches	Any	---
Vise	Any	---
Nylon brush	Any	---
Microfiber Cloth	Any	---

Job Breakdown:

Important Steps	Key Points	Reasons Why
1. Mark tube	1. Tube bottomed out in DMT	Provide reference for swaging and tightening.
2. Install three components	2. Only Swagelok	Mixed parts could leak.
	3. Nut, then back ferrule, then front ferrule	Missing, mis-located and mis-oriented parts could leak.
3. Tube into die	1. Die is clean and smooth	Dirty or worn dies do not work properly.
	2. Tube bottomed out in die	The tube must be fully inserted into the die.
	3. Turn nut to hand tight	Correct starting point.
4. Mark nut and die	1. At 6 o'clock	Provides visual aid to start turning
5. Turn nut	1. 1-1/4 turns	Incorrect turns could cause a leak.
	2. Stop at 9 o'clock	Provides visual aid to finish turning.
	3. DMT line fully showing	Verify swage is complete
6. Remove tube	1. Gently rock tube back and forth	Too much force means the die is worn.

Appendix B. WI.0441 Tightening of tube fittings

Tightening of Tube Fittings
Scope: Tightening of 1/2" Swagelok fittings, port connectors and port adaptors.
Note: "Substitute from WI.0198"

Standard Work Instruction

1	WHAT	Install swaged tube into fitting. Verify that both nut and fitting have same manufacturer markings. C		2	WHAT	Tighten nut (by hand or with wrench) until top of nut is aligned with the bottom of the DMT mark.	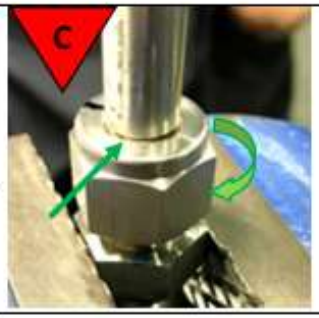 C
	WHY	Swagelok/Parker fittings and nuts are NOT interchangeable.			WHY	This line shows the nut's correct starting location prior to tightening.	
3	WHAT	Mark across nut and fitting with blue paint pen	M 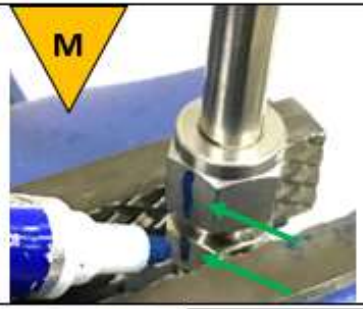	4	WHAT	Put a "backing wrench" on the adjacent fitting. **Note:** some products require holding a different component - this will be noted in the product-specific work instructions.	M
	WHY	The marks are needed for step 5 and inspection.			WHY	The backing wrench prevents the fitting from rotating. This ensures that the nut is NOT under-tightened.	
5	WHAT	Using the blue marks as a visual reference, turn nut between 1/2 and 5/8 of a turn C		6	WHAT	Check gap between nut and fitting with the GO-NOGO gap gage. If the GO section fits AND the NOGO section does not fit, the part is good. If the NO-GO section fits, then tighten the fitting and recheck. If the GO section does not fit, the tube must be removed and scrapped.	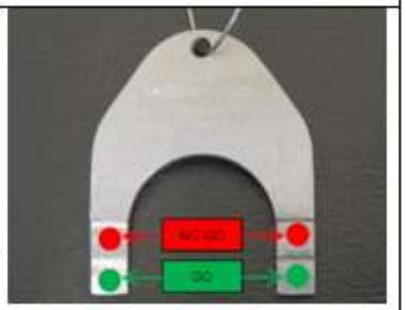
	WHY	If the nut is turned less than 1/2 turn, it may pass a leak test, but leak later in the field.			WHY	The gap indicates how tightly the ferrules are seated against the fitting. Too much gap will allow a leak. Not enough gap indicates too much swaging or tightening.	C

7	Add torque seal between nut and fitting (only when specifically required by customer).		8	---	---
WHY	---		WHY	---	

Equipment List:

Description	Manufacturer	Manufacturer's Part Number
1/4" gap inspection gage	Agility Fuel Solutions	TBD
3/8" gap inspection gage	Agility Fuel Solutions	TBD
1/2" gap inspection gage	Agility Fuel Solutions	TD 400394
Blue paint pen	Dykem	84001
Ultra-fine tip permanent black marker	Sharpie	37001
Yellow torque seal	Dykem	83317
Open-ended wrenches	Any	---
Vise	Any	---

Job Breakdown:

Important Steps	Key Points	Reasons Why
1. Tube into fitting	1. Same manufacturers	Swagelok and Parker fittings are not interchangeable.
	2. Tube bottomed out in fitting	The tube must be fully inserted into the fitting.
	3. DMT line fully showing	Provides correct starting point.
2. Mark parts	1. Across nut and fitting	Provides visual aid to start tightening.
3. Turn nut	2. Use backing wrench	Holds everything in place to prevent leaks.
	3. 1/2 turn	Incorrect turns could cause a leak.
	4. Marks on opposite sides	Provides visual aid to finish tightening.
	5. Verify gap	Verify tightening is complete, but not too much.
4. Torque seal	1. Across nut and fitting	Shows if fitting was loosened.

MOD 8.7-03 Rev01

INSTRUCTION MANUAL TO REPLACE THE PRD

GENERAL INSTRUCTIONS

Read carefully the instructions before proceeding with the replacement of the Pressure Relief Device (PRD) Temperature Activated. The maintenance described hereinafter shall be done only by the authorized workshops/operators after Emer S.p.A. approval.
Don't damage or tamper in any way the valve and its equipment.
Don't use components having damaged packaging, fallen or showing sign of collision and/or damages.
Don't make operations different from those explicitly described in this instruction manual.
All the equipment used for the hereinafter listed operations, shall be suitable to the using and calibrated (where applicable).
For what not expressly described, the indication reported within the standard ISO 19078 "Gas cylinders — Inspection of the cylinder installation, and requalification of high pressure cylinders for the on-board storage of natural gas as a fuel for automotive vehicles" and the following have to be used.

Before conducting following activities it is mandatory that inside the CNG tank and the downstream systems there isn't any residual pressure. This means that the tank, the piping, etc. should be completely vented.
Pay attention not to damage the components during the following activities.

Emer S.p.A. - *a Westport Fuel Systems company*
Via Bormioli 19 • 25135 • Brescia • Italy - Tel +39 030 2510391 • Fax +39 030 2510392 • emer.westport.com

1. Unpack the fresh PRD keeping the plastic bag, the protective plastic cap and the main carton box.
2. Unscrew the PRD Part 2 at **Fig 1**.
3. Remove the previous O-ring from the seat at the valve body, blow compressed air into the seat of the PRD and check that the fresh PRD is having the O-ring at the proper seat.
4. Apply the sealant as specified at **Table 1** on the threads of the new PRD and screw the PRD into the threaded seat at the valve body.
5. Tighten the PRD with a dynamometric key size 24 set at a torqueing value as declared in **Table 1**.
6. Pressurize the system at min 200 bar with CNG. The pressurizing of the CNG can be done either with a back-up CNG tank or at the CNG filling station. Do not use CNG fast filling stations for pressurizing the systems. In case of multiple tanks all the tanks must be pressurized (all the PRDs present in the system should be replaced before conducting the leak test at Step No 7).
7. Check the tightness of the PRD at the sealing area of the valve using either sniffer measuring machine (preferably) or with snoop solution (in case sniffer machine is not available). With snoop solution the PRD is leak proof in case of no bubbles. If sniffer machine is used please contact Emer at *emer-service@wfsinc.com* specifying the technical details of machine for defyning acceptance criteria.

DRAFT

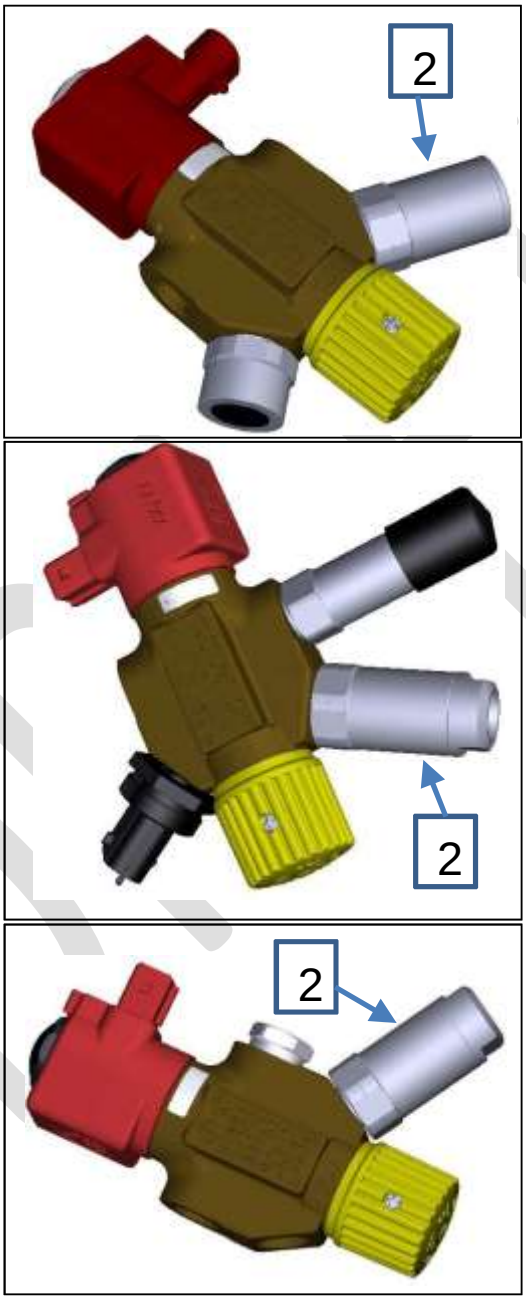

Fig 1

S. No	Tank Valve Part No	PRD Type	PRD thread	Torqueing value	Glue
1	MARK106-006	PRD100OR	M16x1	30±15% Nm	Loctite 276 - 4 mg
2	MARK114	PRD2002T	M16x1	30±15% Nm	Loctite 276 - 4 mg
3	MARK121-004	PRD200OR	M16x1	30±15% Nm	Loctite 276 - 4 mg
4	MARK131-003	PRD200OR	M16x1	30±15% Nm	Loctite 276 - 4 mg
5	MARK137-001	PRD200OR	M16x1	30±15% Nm	Loctite 276 - 4 mg
6	MARK139	PRD200OR	M16x1	30±15% Nm	Loctite 276 - 4 mg
7	MARK147-005	PRD200OR	M16x1	30±15% Nm	Loctite 276 - 4 mg
8	MARK147-008	PRD2102T	M16x1	60±10 Nm	Loctite 276 - 4 mg
9	MARK155-001	PRD210ORMP	M16x1	30±15% Nm	Loctite 276 - 4 mg
10	MARK156-003	PRD2102T	M16x1	60±10 Nm	Loctite 276 - 4 mg
11	MARK156-006	PRD2102T	M16x1	30±15% Nm	Loctite 276 - 4 mg
12	MARK160	PRD100OR	M16x1	30±15% Nm	Loctite 276 - 4 mg
13	MARK163-003	PRD200OR	M16x1	30±15% Nm	Loctite 276 - 4 mg
14	MARK169	PRD210OR	M16x1	30±15% Nm	Loctite 276 - 4 mg
15	MARK193	PRD200OR	M16x1	30±15% Nm	Loctite 276 - 4 mg
16	MARK199-003	PRD210OR	M16x1	30±15% Nm	Loctite 276 - 4 mg
17	MARK199-004	PRD210OR	M16x1	30±15% Nm	Loctite 276 - 4 mg
18	MARK199-006	PRD2102T	M16x1	30±15% Nm	Loctite 276 - 4 mg
19	MARK703-002	PRD217OR	M16x1	30±15% Nm	Loctite 276 - 4 mg

Table 1

Emer S.p.A. declines any responsibility for eventual damages due to person, things or animals directly and indirectly, as a consequence of non-observation of instructions and assembly, use and maintenance directions of the component.

For every controversy concerning the execution and/or interpretation of the present contract, it is applicable the Italian Law and the place of jurisdiction is Brescia's court of justice.

In case of any assistance, contact Emer S.p.A. at emer-service@wfsinc.com

DRAFT

6. Warranty Information

This procedure is covered under warranty. Standard repair time (SRT) is TBA. Please refer to Warranty Manual, ENP-067, for warranty reimbursement procedures.

For parts and support, contact Agility® Customer Care:

+1 949 267 7745

+1 855 500 2445 toll free

parts@agilityfs.com

Proprietary Statement

The information provided within this document is proprietary and confidential. All prior versions, including updates and revisions forwarded separately, are proprietary. The information provided by Agility® to its customers and clients is solely for the use of those customers and clients. No portion of this publication may be reproduced or distributed without express written consent of Agility®. Agility® reserves the right to utilize the intellectual property contained within this publication as content for any other publication produced by Agility®.

Trademark Notice

Agility® is a trademark of Agility Fuel Solutions LLC. Trademarks of other manufacturers are the property of their respective companies.

Agility Fuel Solutions
3335 Susan Street, Suite 100
Costa Mesa, CA 92626 USA
www.agilityfuelsolutions.com

Revision	Description	Author	Approved By	Date
--	Initial Release	C. Grasso	CCG Team	06/11/2020
A	ADDED: Instruction to capture solenoid valve serial number and batch number data for each valve PRD removed	C.Grasso	CCG Team	8/5/2020

DRAFT