SAFETY RECALL 18V-408

Retrofitting bearing support for side stand

G 310 R (K03, 0G11), G 310 GS (K02, 0G12)

Leadership circle

Marketing

Sale
New motorcycles

Sale
Used motorcycles

Aftersales

Administration

Service Information No. SI 46 001 18

© 2018, BMW of North America, LLC.
The contents of this document are confidential and should not be shared with third parties for distribution.
All prices subject to change without notice.

8/2018

Service Information No. SI 41 001 18 Recall 18V-408

Retrofitting the bearing support for the side stand

Details
In the course of quality analysis BMW Motorrad has determined that the side stand bearing support can bend, or in an extreme case even break. The side stand bearing support is to be checked for damage and an additional reinforcement will be installed.

Delivery stop
For this reason, the vehicles were placed under a delivery stop **STOP460003** Safety Recall.

Vehicles affected
In order to determine if a specific vehicle is affected by this Technical Campaign, it will be necessary to verify all VIN's **through AIR** (Aftersales Information Research). Based on the response of the system, either proceed with the repair or take no further action. Please note, VIN's in DCS Vehicle History Check may not appear until 24-72 hours after the release of this bulletin, therefore AIR is the recommended method for determining open campaigns.

NHTSA Statement
Please be reminded that it is a violation of federal law (The Safety Act) for you to sell, lease or deliver any new motorcycle covered by this notification until the recall repair has been performed. This means that dealers may not legally deliver new motorcycles to consumers until they are fixed or use/sell replacement equipment/parts subject to this recall. Note also that substantial civil penalties apply to violations of the Safety Act.
Also, you should not sell, lease or deliver any Certified Pre-Owned or used motorcycles subject to a safety recall until the repair is completed.
Please follow any special instructions that we provide to you for the return or disposition of recall parts.

Production Solution
As of April 24, 2018 for the G 310 R (K03) and May 5, 2018 for the G 310 GS (K02), motorcycles with the new bearing support for the side stand connection have been produced.

Service Solution
This safety recall is to be carried out according to the supplementary repair instructions.

0G12 - G 310 GS
00 60 335 Retrofit bearing support for side stand

0G11 - G 310 R
00 60 335 Retrofit bearing support for side stand.

The frame that is to be repaired can be identified by a welded on bearing support for the side stand. The new frame has a continuous steel plate with a ring on it. See pictures on pg.3

In rare circumstances, severe enough damage can have the consequence that the rework solution cannot be implemented. In such an instance, a PuMA case is to be created giving details of the damage along with photos. Photos are to include the complete motorcycle, then several more, each one getting closer to the damage.

© 2018, BMW of North America, LLC.
The contents of this document are confidential and should not be shared with third parties for distribution.
All prices subject to change without notice.

Service Information No. SI 41 001 18 Recall 18V-408

Retrofitting the bearing support for the side stand

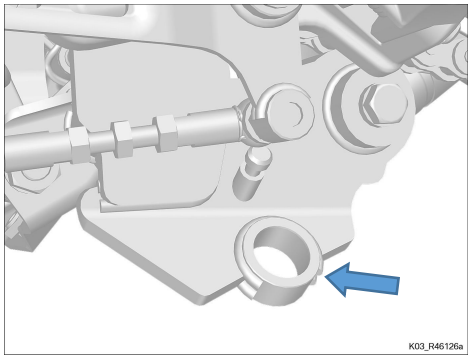

Figure 1: G 310 R old bearing support for the side stand (arrow).
(Part number: 46 51 8 554 145)

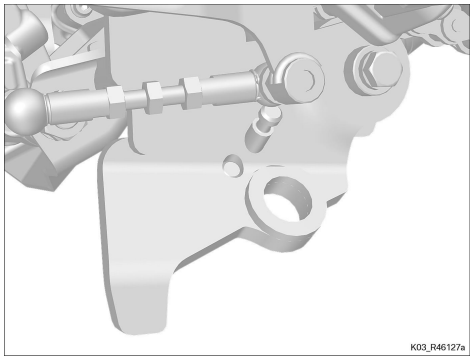

Figure 2: G 310 R new bearing support for the side stand.
(Part number: 46 51 8 414 455)

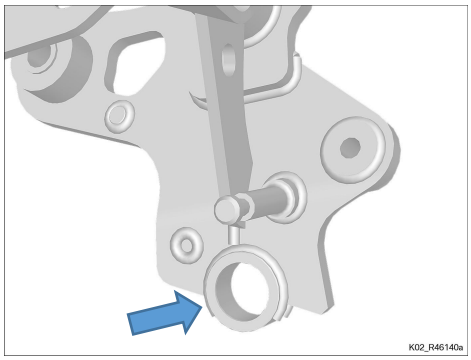

Figure 3: G 310 GS old bearing support for the side stand (arrow).
(Part number: 46 51 8 562 028)

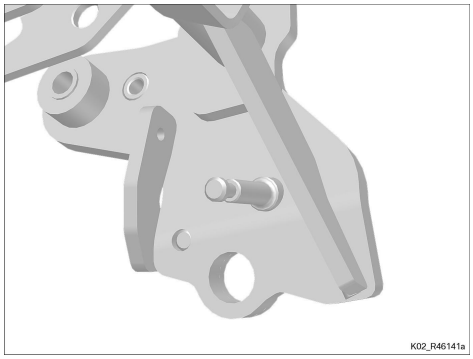

Figure 4: G 310 GS new bearing support for the side stand.
(Part number: 46 51 9 480 423)

© 2018, BMW of North America, LLC.
The contents of this document are confidential and should not be shared with third parties for distribution.
All prices subject to change without notice.

Service Information No. SI 41 001 18 Recall 18V-408

Retrofitting the bearing support for the side stand

NOTICE

A visual inspection without repair is NOT permitted.

NOTICE

In the case of motorcycles where the frame is broken, a frame with the vehicle identification number can be ordered according to the process in SI_46_001 17 Replacement frame with a vehicle identification number

Parts availability

NOTICE

Due to the initial restricted availability of retrofit kits, only customer vehicles or new vehicles which have recently been bought should be converted. The retrofit of inventory vehicles should be avoided at first.

In order to ensure that the required replacement parts are available as soon as possible, the first 40% of the components will be milled components. In the later stages of the campaign, the components will be forged. Technically, the components are identical. All the components of the rework solution are compatible with each other so that a mixed installation of milled and forged components is possible.

NOTICE

The part numbers of the forged parts shall only be provided with the next revision of this Service Information.

Warranty processing

The repair described in this bulletin is covered under warranty regardless of time or mileage.
Reimbursement for this Recall Campaign is through normal claim entry utilizing the following information:

Defect code

00 00 46 33 00	Retrofitting the bearing support for the side stand

FRU number

*00 60 335	Retrofit bearing support for side stand, 7FRU's
+00 60 647	Retrofit bearing support for side stand, 6 FRU's

*Main Work: These main labor operations include all repair procedures to complete the task with allowance for necessary ancillary tasks (e.g. visual inspection, lubrication, cleaning parts etc.) and administrative tasks. Only one main labor operation can be claimed per repair visit. All other labor operations for any other line(s) must be claimed using plus code labor operations. Please refer to the Warranty Policy and Procedures Manual regarding add-ons, proper support, documentation, claims submission and archiving requirements as applicable.

Part numbers for G 310 R (K03)

46 53 2 464 930	Side stand set
46 53 9 457 230	Washer
31 30 6 798 572	2x Collared nut, M8
51 47 9 908 578	2x Flat-head screw M8x30
61 31 8 547 664	Body screw (only if required, the old screw can be reused)

Part numbers for G 310 GS (K02)

46 53 2 464 931	Side stand set
46 53 9 457 230	Washer
31 30 6 798 572	Collared nut, M8
46 53 9 457 238	Side-stand switch cover
07 11 9 901 545	Circlip
07 12 9 904 491	2x ISA screw, M5x10
51 47 9 908 579	Flat-head screw M8x45
61 31 8 547 664	Body screw (only if required, the old screw can be reused)

© 2018, BMW of North America, LLC.
The contents of this document are confidential and should not be shared with third parties for distribution.
All prices subject to change without notice.

Service Information No. SI 41 001 18 Recall 18V-408

Retrofitting the bearing support for the side stand

Part number for forged parts (G 310 R)

46 53 9 457 863	Side stand
46 53 9 457 229	Pivot mount
46 53 9 457 236	Side-stand switch adapter
46 53 9 457 226	Side-stand screw
46 53 9 457 230	Washer
31 30 6 798 572	2x Collared nut, M8
51 47 9 908 578	2x Flat-head screw M8x30
61 31 8 547 664	Body screw (only if required, the old screw can be reused)

Part number for forged parts (G 310 GS)

46 53 9 457 861	Side stand
46 53 9 457 243	Pivot mount
46 53 9 457 241	Side-stand switch adapter
46 53 9 457 226	Side-stand screw
46 53 9 457 230	Washer
31 30 6 798 572	Collared nut, M8
46 53 9 457 238	Side-stand switch cover
07 11 9 901 545	Circlip
07 12 9 904 491	2x ISA screw, M5x10
51 47 9 908 579	Flat-head screw M8x45
61 31 8 547 664	Body screw (only if required, the old screw can be reused)

Part number for frame replacement (G 310 R)

46 51 9 457 073	Frame WITH VIN (everywhere except Brazil)
46 53 8 414 452	Side stand
46 53 8 414 453	Side-stand screw

Part number for frame replacement (G 310 GS)

46 51 9 457 074	Frame WITH VIN (everywhere except Brazil)
46 53 8 414 450	Side stand
46 53 8 414 453	Side-stand screw

Special Tool

83 30 2 464 250	1x Mounting tool for the bearing support (G 310 R and G 310 GS)

Spare Parts for special Tool

83 30 2 465 815	Drill, 9 mm
83 30 2 465 818	Milling tool,18 mm/9 mm

Note: One tool set has been auto shipped per BMW's Automatic Tool Shipment Program. This **one** tool set can be claimed one time per dealer by adding the part number to a single warranty claim related to this campaign.
Additional inventory may be ordered through normal parts channels.

© 2018, BMW of North America, LLC.
The contents of this document are confidential and should not be shared with third parties for distribution.
All prices subject to change without notice.

Service Information No. SI 41 001 18 Recall 18V-408

Retrofitting the bearing support for the side stand

Consumables

51 91 2 360 754	Paint pen set cathodic dip coating, matt black
83 19 2 210 337	High-strength screw lock (Loctite 270)

NOTICE

Any applicable costs for mobilization due to limited parts availability are to be settled in the warranty claim via sublet 01.

NOTICE

If additional drills and milling tools are procured locally, the costs for these can be settled via Sublet 03. An invoice must be attached to the warranty claim.

Questions regarding this bulletin?

For technical inquires in relation to this bulletin	Please contact the PuMA team
For warranty inquires in relation to this bulletin.	Submit an IDS ticket to the Warranty Department
For parts inquires in relation to this bulletin	Submit an IDS ticket to the Motorrad Parts Department

© 2018, BMW of North America, LLC.
The contents of this document are confidential and should not be shared with third parties for distribution.
All prices subject to change without notice.

Service Information No. SI 41 001 18 Recall 18V-408

Retrofitting the bearing support for the side stand

TREAD ACT CUSTOMER REIMBURSEMENT PLAN

(BMW of North America, LLC)
If you have paid for the repair described in the attached letter, and you would like your expenses to be considered for reimbursement, please contact your authorized BMW Motorcycle dealer. Expenses paid to repair facilities outside of the BMW Motorcycle dealer network will be considered; however, the repair procedure must meet BMW standards.
Your authorized BMW Motorcycle dealer will request a copy of your owner notification letter, as well as, your previously paid invoice. They will then inspect your motorcycle (if it is still in your possession) prior to submitting a claim on your behalf to BMW of North America, LLC for reimbursement.
Please note the following:

- Only a repair that is the subject of this safety recall is reimbursable. Consequential expenses such as towing, rental, accommodations, damage repairs, etc. will not be reimbursed.
- The Manufacturer's Suggested Retail Price (MSRP) for BMW Genuine Parts will be considered as the guideline for reasonable part charges.
- Repair labor, taxes and hazardous waste disposal, when previously paid, are eligible for reimbursement.
- Expenses for repairs performed more than 10 days after the date of the last owner notification sent by BMW are not eligible for reimbursement.

Your authorized BMW Motorcycle dealer should be able to answer any questions that you may have regarding your qualifications for reimbursement of a previous repair. If you qualify for such a reimbursement, your BMW Motorcycle dealer will also be able to advise you of the manner in which you can expect to receive reimbursement.
Your authorized BMW Motorcycle dealer should be your primary contact on this issue; however, our Customer Relations and Services Department may be contacted at 1-800-525-7417 for any special assistance that you may require.
In special situations where your authorized BMW Motorcycle dealer cannot be of assistance, you may submit your written request for reimbursement to:

Customer Relations and Services Department
BMW of North America, LLC
P.O. Box 1227
Westwood, NJ 07675-1227

If you intend to submit a request for reimbursement to our Customer Relations and Services department, your motorcycle (if it is still in your possession and was repaired at a facility outside of the BMW Motorcycle dealer network) will need to be inspected at an authorized BMW Motorcycle dealer before a claim can be accepted for consideration. This is to ensure that prior repairs at an outside facility meet BMW standards for recall completion.

© 2018, BMW of North America, LLC.
The contents of this document are confidential and should not be shared with third parties for distribution.
All prices subject to change without notice.

Service Information No. SI 41 001 18 Recall 18V-408

Retrofitting the bearing support for the side stand

0G11 - G 310 R

1

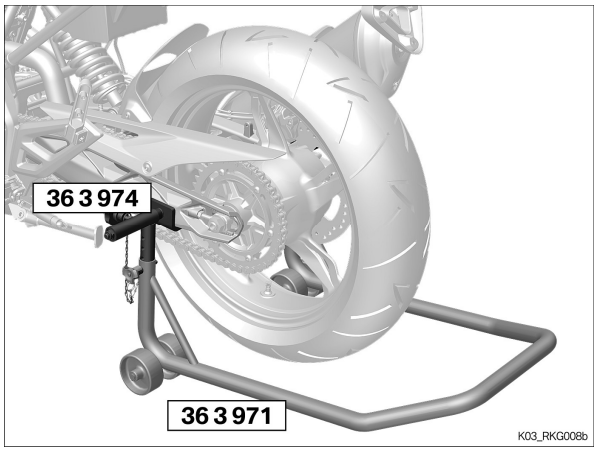

Placing motorcycle on rear-wheel stand

- Insert mounts (36 3 974) into basic stand (36 3 971), use the pins to adjust the height.
- Maneuver the rear-wheel stand into position, making sure that the axle is not blocked.
- Seat mounts (36 3 974) against the swinging arm and tighten the clamping screws to secure.

ATTENTION

Vehicle toppling to side

Risk of damage to parts if vehicle topples

- Make sure that the vehicle is secured so that it cannot topple sideways.

- Hold the motorcycle upright and at the same time press the stand down until the motorcycle is level and the handle of the rear-wheel stand is on the ground.

2

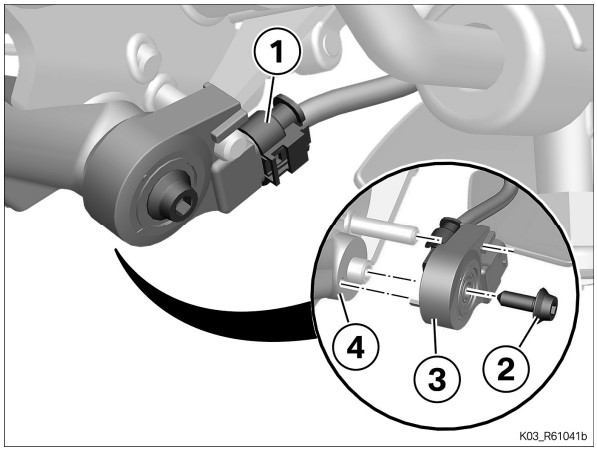

Removing side-stand switch

- Disconnect connector **(1)** for the side-stand switch.
- Remove bolt **(2)** and remove side-stand switch **(3)** from side stand **(4)**.

© 2018, BMW of North America, LLC.
The contents of this document are confidential and should not be shared with third parties for distribution.
All prices subject to change without notice.

3

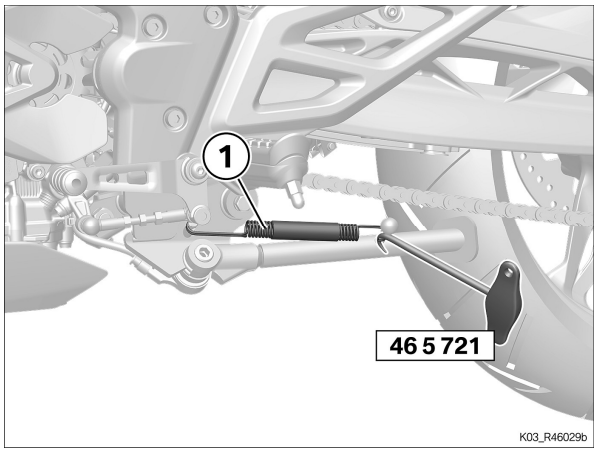

Removing side stand

Removing tension springs for side stand

CAUTION

Components spring-loaded
Risk of injury caused by flying parts

- Wear safety goggles.
- Carefully relieve and, as applicable, apply spring tension.

- Remove tension springs **(1)**, using hook (46 5 721).

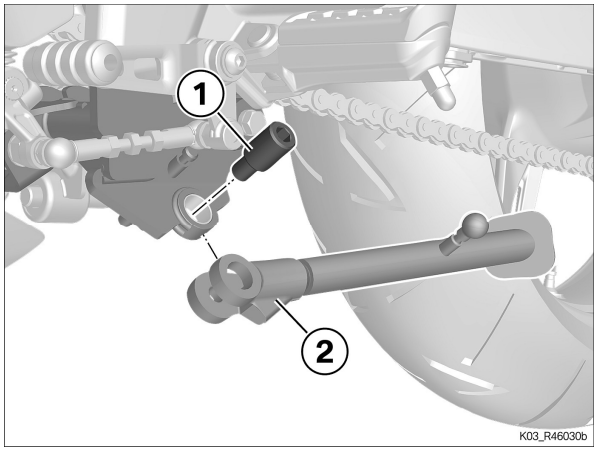

- Remove screw **(1)**.
- Remove side stand **(2)**.

4

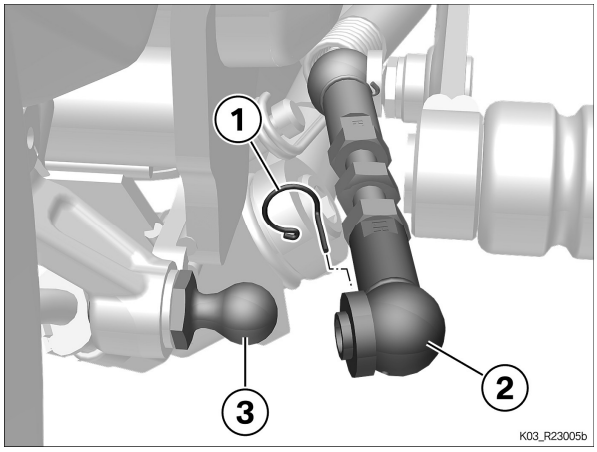

Fixing rider footrest and gearshift lever

- Remove retaining clip **(1)**.
- Release gearshift rod **(2)** from ball head **(3)**.

© 2018, BMW of North America, LLC.
The contents of this document are confidential and should not be shared with third parties for distribution.
All prices subject to change without notice.

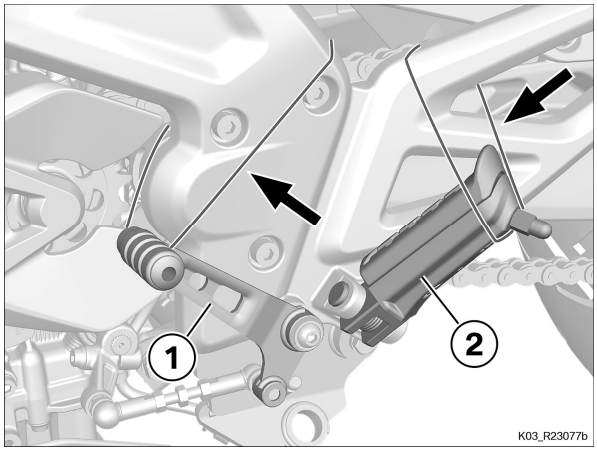

- Fix gearshift lever **(1)** and rider footrest **(2)** with, for example, rubber bands **(arrows)**.

5

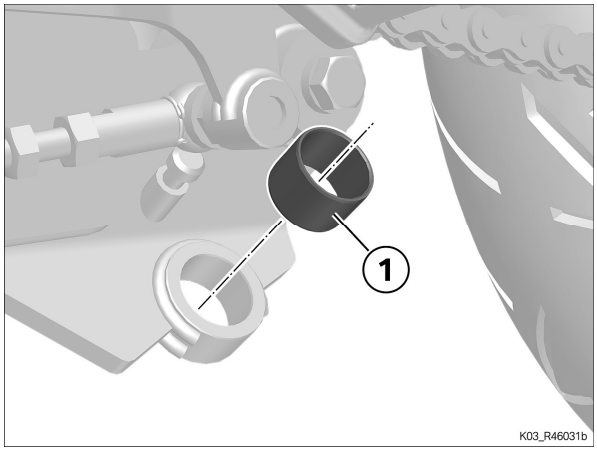

Remove bearing bush of the side stand

- Remove bearing bush **(1)** with a suitable tool.

Technical data			
Outer diameter of the bearing bush		18 mm	

6

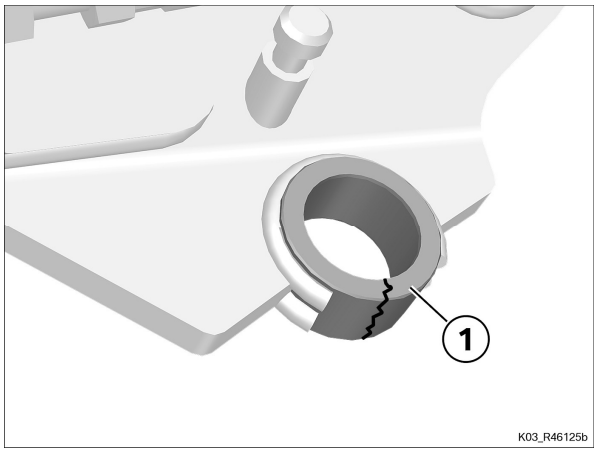

Checking the frame around the side stand bracket

- Check the bearing bush **(1)** for cracks and deformation.

© 2018, BMW of North America, LLC.
The contents of this document are confidential and should not be shared with third parties for distribution.
All prices subject to change without notice.

Retrofitting the bearing support for the side stand

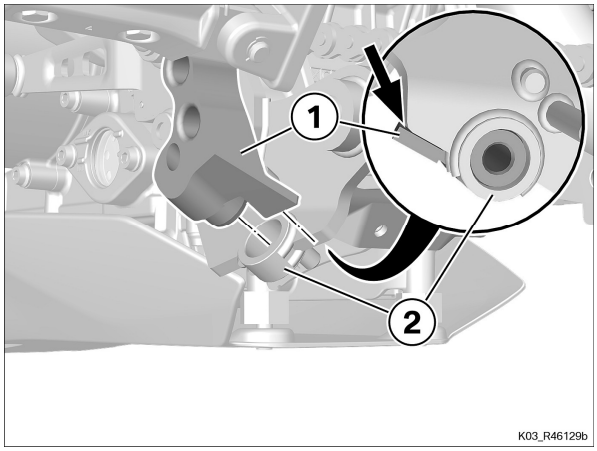

- Insert drilling template **(1)** in bearing bush **(2)**.

» Drilling template must rest against the frame stop **(arrow)**.

Check Result
Bearing bush has cracks or is deformed/drilling template does not fit.

Measure
- Create a Puma case, do not carry out any repairs.

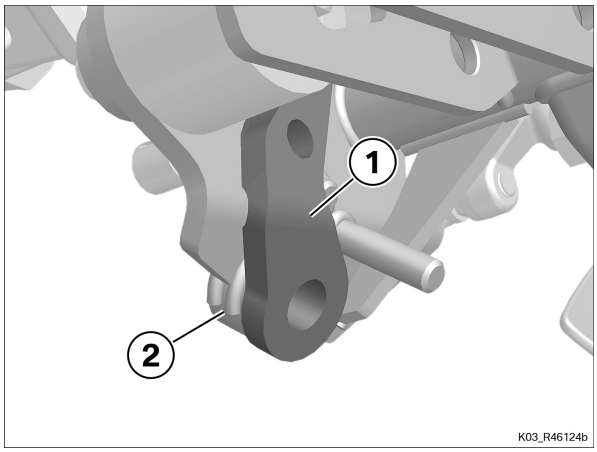

- Check if bearing support **(1)** can be inserted into bearing bush **(2)** from the inside.

Check Result
Bearing bush is damaged or deformed.

Measure
- Create a Puma case, do not carry out any repairs.

Check Result
Bearing bush is not damaged, bearing support and drilling template can be inserted.

Measure
- Retrofit the bearing support for the side stand.

◀

7

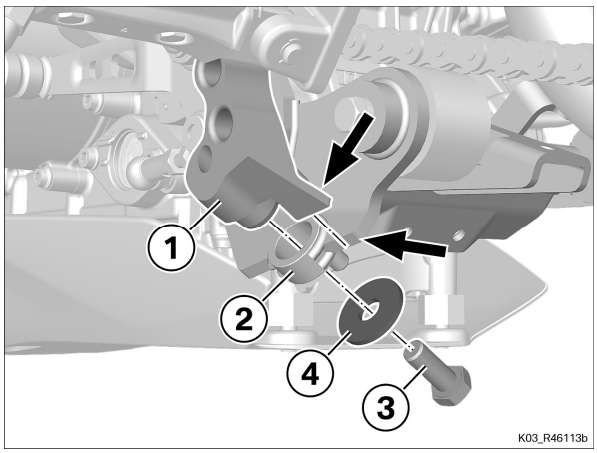

▶ **Installing the drilling template and drilling the frame (for the reinforcement of the side stand)**

- Insert drilling template "**B**" **(1)** from set (46 5 680) in frame **(2)**.
- Secure drilling template **(1)** with screw **(3)** and contact disc **(4)**.
- Position lug on frame stop **(Arrows)** and tighten bolt **(3)**.

© 2018, BMW of North America, LLC.
The contents of this document are confidential and should not be shared with third parties for distribution.
All prices subject to change without notice.

Retrofitting the bearing support for the side stand

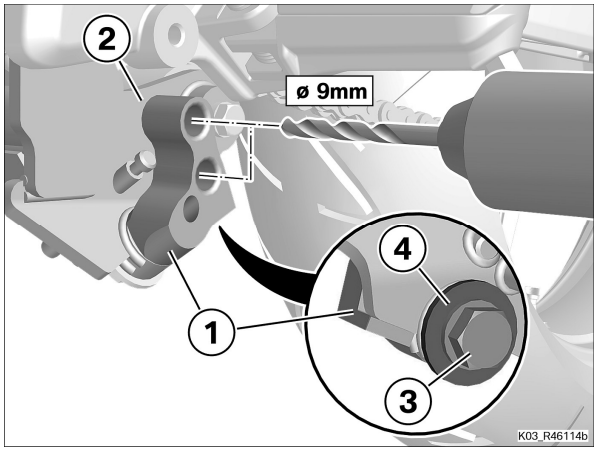

- Using drilling template **(1)**, drill frame **(2)** in two places and while doing so, lubricate/cool with cutting oil.

Technical data			
Bore hole diameter for the reinforcement of the side stand		9 mm	

- Remove screw **(3)**, contact disc **(4)** and drilling template **(1)**.
- Clean bore holes with compressed air.

8

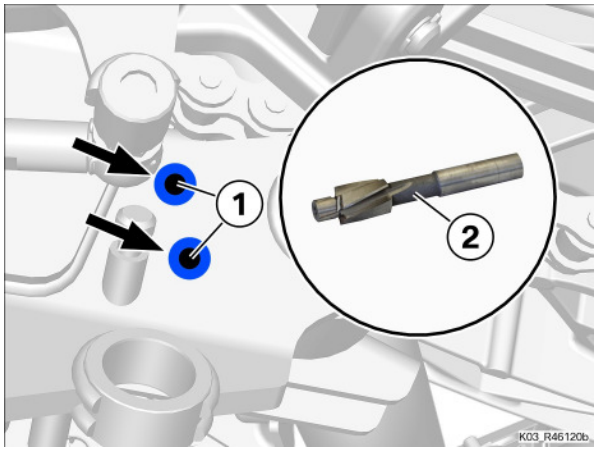

Milling the frame bore holes even and painting them

- Carefully mill bore holes **(1)** even with the frame using the delivered milling tool **(2)**.

» Mill until the milling covers the entire drilled area **(Arrows)** and, if required, also even down the weld seam.

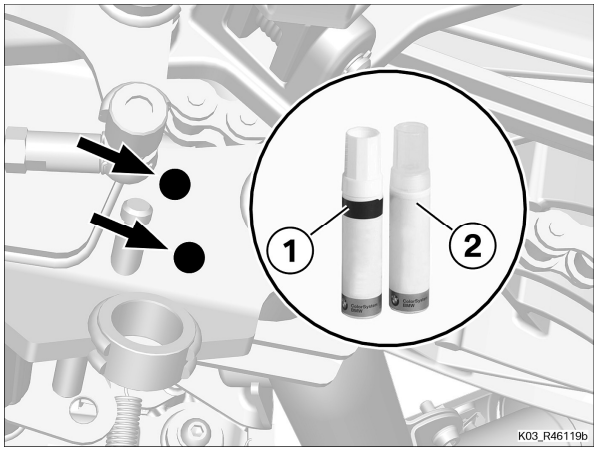

- Clean bore holes **(Arrows)** and degrease.
- Paint the bore holes **(Arrows)** and milled surfaces with repair paint **(1)** and clear paint **(2)**.

» No bright metal surfaces may remain visible, comply with the drying times.

© 2018, BMW of North America, LLC.
The contents of this document are confidential and should not be shared with third parties for distribution.
All prices subject to change without notice.

9

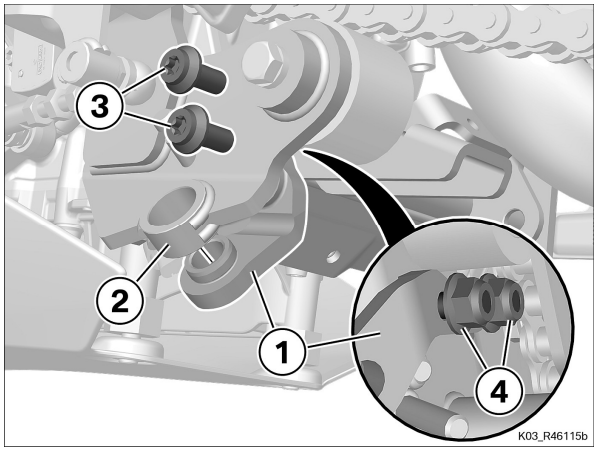

Installing pivot mount for side stand

- Insert bearing support **(1)** into frame **(2)**.
- Install bolts **(3)** and nuts **(4) until hand-tight**.

10

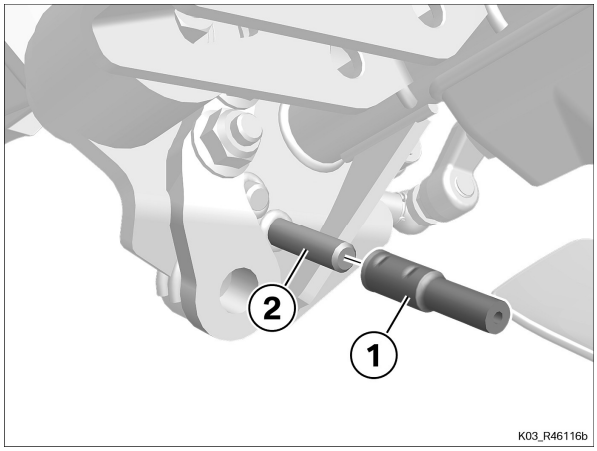

Installing the adapter for the side stand switch

- Install adapter **(1)** up to the limit position of the switch lock **(2)**.

© 2018, BMW of North America, LLC.
The contents of this document are confidential and should not be shared with third parties for distribution.
All prices subject to change without notice.

11

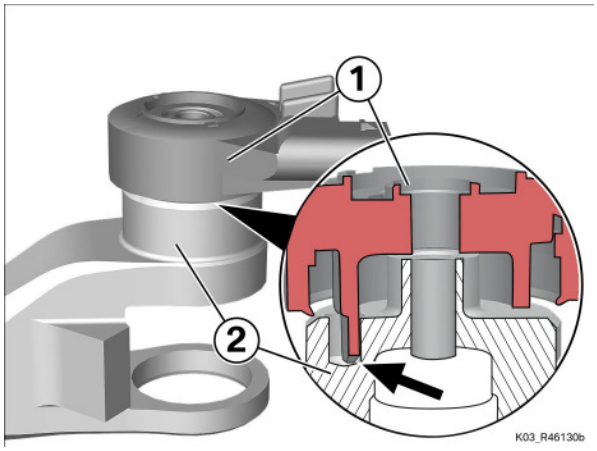

Checking and, if necessary, shortening driver length of side-stand switch

- Place side-stand switch **(1)** on **new** side stand **(2)**.

Check

- Check if driver is in bore hole **(arrow)**.

Result

Driver is fitted.

Measure

- Shorten driver.

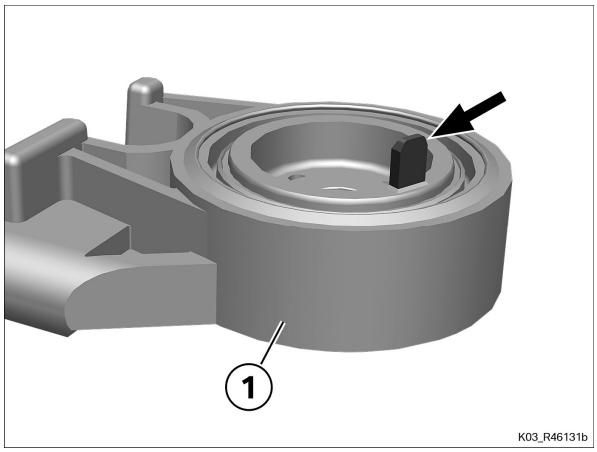

- Shorten driver **(arrow)** with a file **as necessary**, ensuring that no swarf remains in side-stand switch **(1)**.

© 2018, BMW of North America, LLC.
The contents of this document are confidential and should not be shared with third parties for distribution.
All prices subject to change without notice.

12

Installing the side stand and tightening the bearing support

ATTENTION

Damage of the bearing due to lubricants.
Component damage, stiff movement

- Lubricants can damage the coating chemically.
- Lubricant bind dirt particles and increase the wear by this.
- A PTFE-bearing is maintenance free; do not lubricate the bearing.

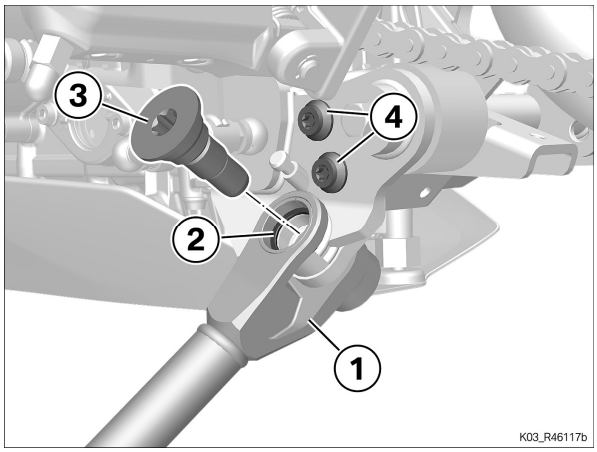

- Position side stand **(1)** with contact disc **(2)**.
- Install screw **(3)** with screw lock.

Tightening torques		
Side stand to frame and bearing support		
M14 x 1.5 Thread-locking compound (Loctite 270, High strength)	80 Nm	

- Tighten the screws **(4)**.

Tightening torques		
Pivot mount to frame		
M8	28 Nm	

Check

- Check side stand for ease of movement.

Result

Side stand jams or does not reach the limit position.

Measure

- Loosen screws and tighten once again.
- Check the contact surfaces on the frame for unevenness/welding spatter and rework if required.

© 2018, BMW of North America, LLC.
The contents of this document are confidential and should not be shared with third parties for distribution.
All prices subject to change without notice.

13

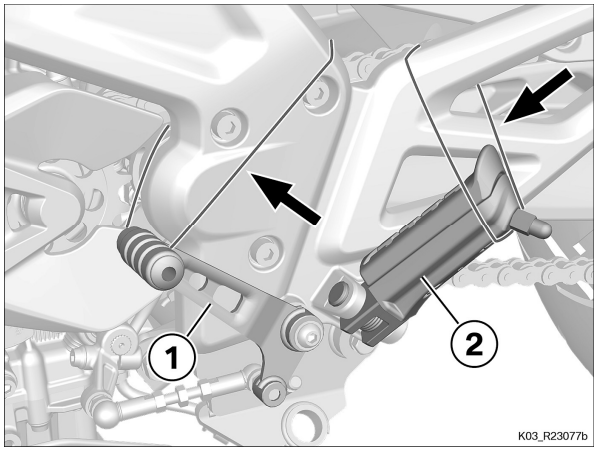

Releasing rider footrest and gearshift lever

- Release rubber bands **(arrows)** from gearshift lever **(1)** and rider footrest **(2)**.

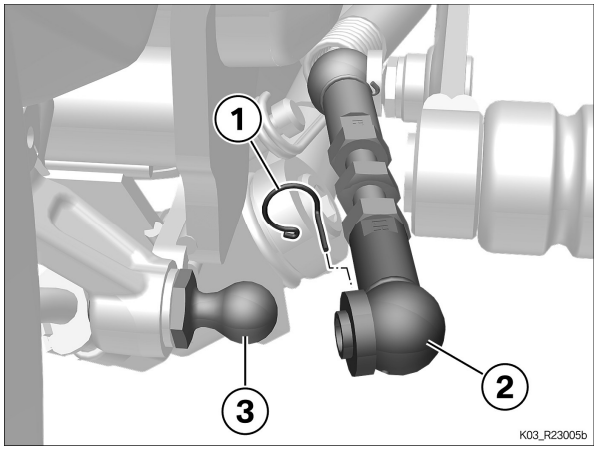

- Push gearshift rod **(2)** on ball head **(3)**.
- Install retaining clip **(1)**.

14

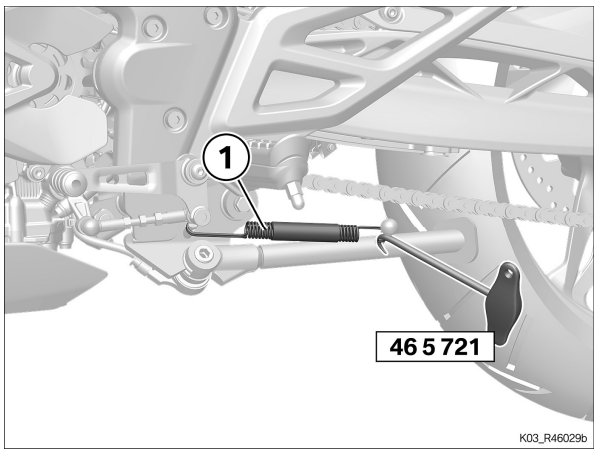

Installing tension springs for side stand

CAUTION

Components spring-loaded
Risk of injury caused by flying parts
- Wear safety goggles.
- Carefully relieve and, as applicable, apply spring tension.

- Install tension springs **(1)**, using hook (46 5 721).

© 2018, BMW of North America, LLC.
The contents of this document are confidential and should not be shared with third parties for distribution.
All prices subject to change without notice.

15

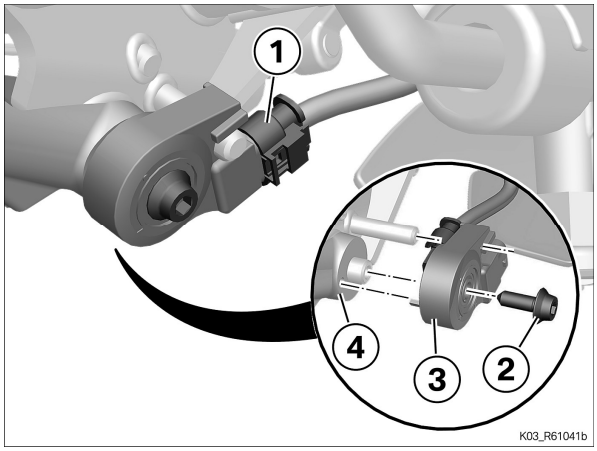

Installing side-stand switch

- Clean the threads.
- Position side-stand switch **(3)** on side stand **(4)** and install bolt **(2)**.

Tightening torques		
Side-stand switch to side-stand screw		
M6 x 16, Replace screw Thread-locking compound (Micro-encapsulated)	6 Nm	

- Connect connector **(1)** for the side-stand switch.

16

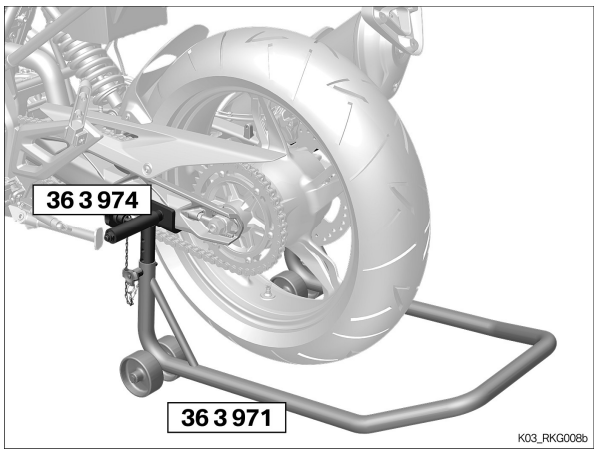

Removing motorcycle from rear-wheel stand

- Extend the side stand.

ATTENTION

Vehicle toppling to side

Risk of damage to parts if vehicle topples

- Make sure that the vehicle is secured so that it cannot topple sideways.

- If applicable, remove the straps.
- Secure the vehicle to ensure that it cannot topple and slowly lower it, remove rear-wheel stand (36 3 971).
- Place the motorcycle on its side stand.

© 2018, BMW of North America, LLC.
The contents of this document are confidential and should not be shared with third parties for distribution.
All prices subject to change without notice.

Service Information No. SI 41 001 18 Recall 18V-408

Retrofitting the bearing support for the side stand

0G12 - G 310 GS

00 60 335 Retrofit bearing support for side stand

1

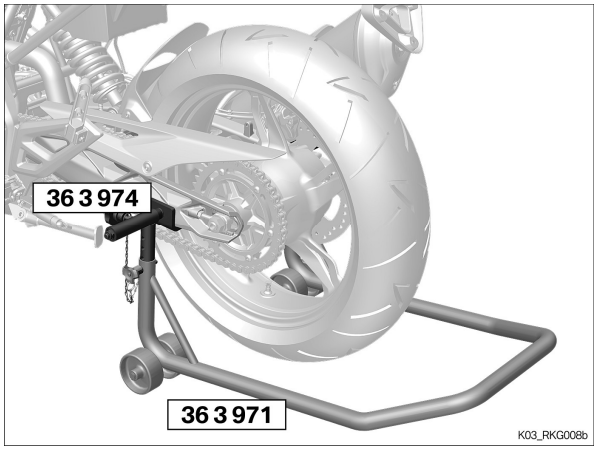

▶ **Placing motorcycle on rear-wheel stand**

- Insert mounts (36 3 974) into basic stand (36 3 971), use the pins to adjust the height.
- Maneuver the rear-wheel stand into position, making sure that the axle is not blocked.
- Seat mounts (36 3 974) against the swinging arm and tighten the clamping screws to secure.

ATTENTION

Vehicle toppling to side
Risk of damage to parts if vehicle topples

- Make sure that the vehicle is secured so that it cannot topple sideways.

- Hold the motorcycle upright and at the same time press the stand down until the motorcycle is level and the handle of the rear-wheel stand is on the ground.

◀

2

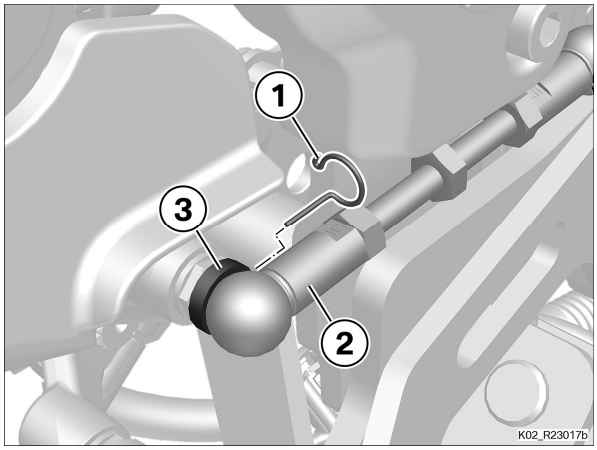

▶ **Releasing gearshift linkage and swinging away gearshift lever**

- Remove retaining clip **(1)**.
- Release gearshift rod **(2)** from ball head **(3)**.

© 2018, BMW of North America, LLC.
The contents of this document are confidential and should not be shared with third parties for distribution.
All prices subject to change without notice.

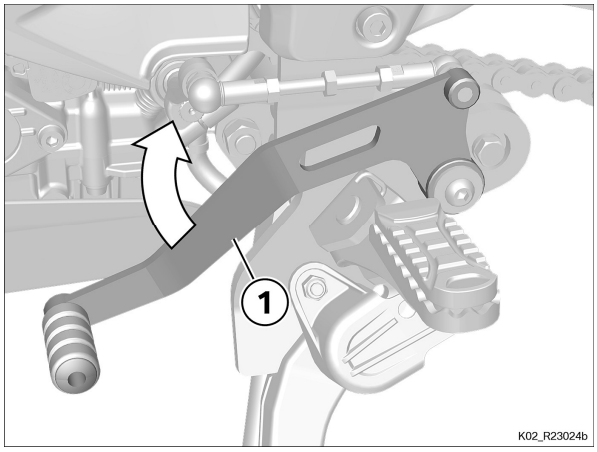

- Swing gearshift lever **(1)** to the rear.

3

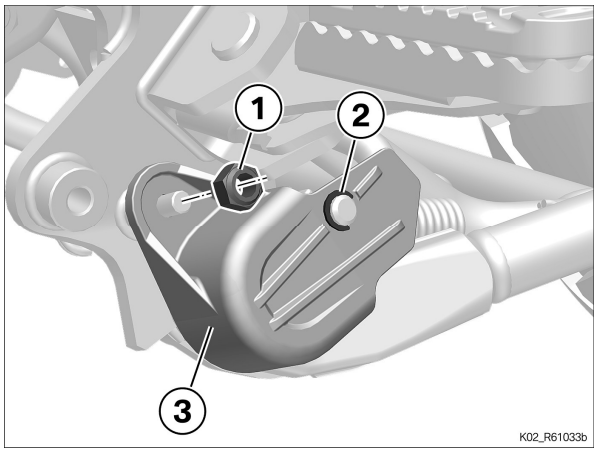

Removing side-stand switch

- Remove the nut **(1)**.
- Remove the circlip **(2)**.
- Remove cover **(3)**.

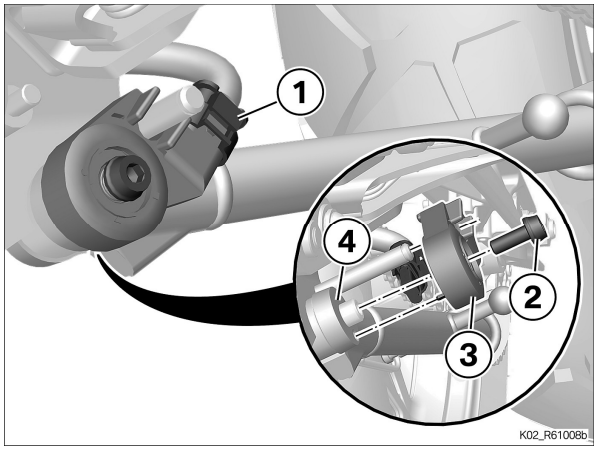

- Disconnect connector **(1)** for side-stand switch.
- Remove bolt **(2)** and take side-stand switch **(3)** from side stand **(4)**.

© 2018, BMW of North America, LLC.
The contents of this document are confidential and should not be shared with third parties for distribution.
All prices subject to change without notice.

4

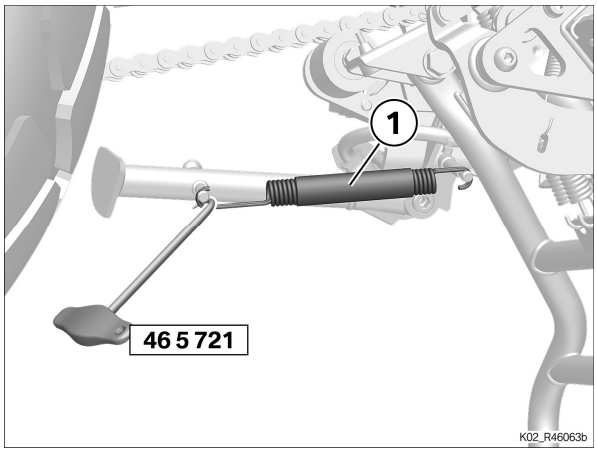

Removing side stand

Removing tension springs for side stand

CAUTION

Components spring-loaded
Risk of injury caused by flying parts

- Wear safety goggles.
- Carefully relieve and, as applicable, apply spring tension.

- Remove tension springs **(1)**, using hook (46 5 721).

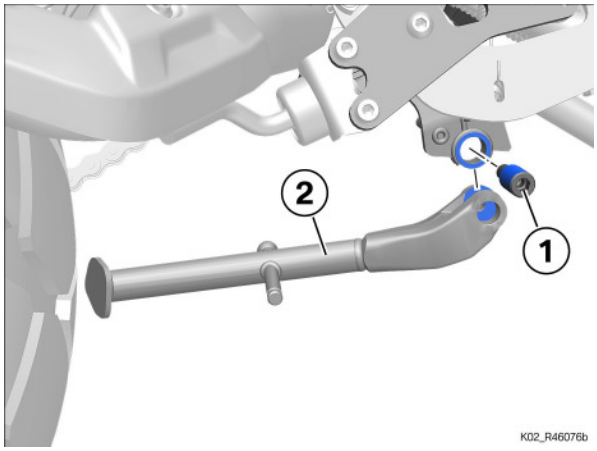

- Remove screw **(1)**.
- Remove side stand **(2)**.

5

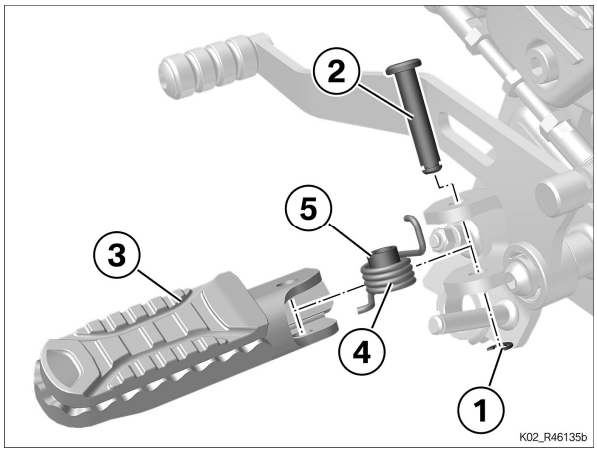

Removing front left footrest

- Remove retaining clip **(1)**.
- Remove bolt **(2)** and footrest **(3)** with spring **(4)** and sleeve **(5)**.

© 2018, BMW of North America, LLC.
The contents of this document are confidential and should not be shared with third parties for distribution.
All prices subject to change without notice.

6

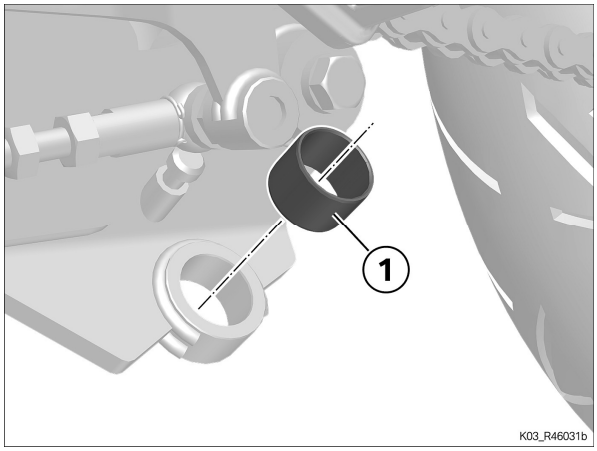

Remove bearing bush of the side stand

- Remove bearing bush **(1)** with a suitable tool.

Technical data			
Outer diameter of the bearing bush		18 mm	

7

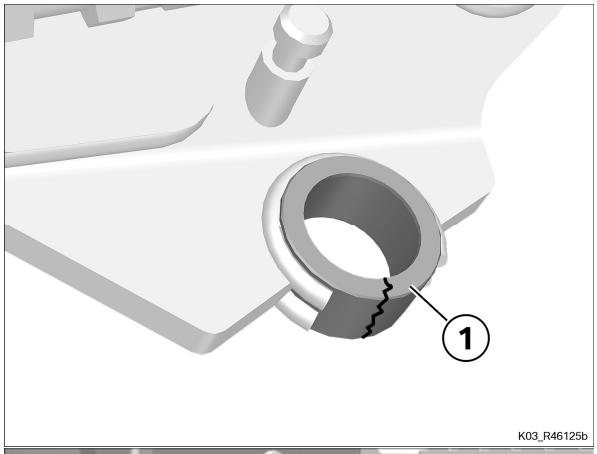

Checking the frame around the side stand bracket

- Check the bearing bush **(1)** for cracks and deformation.

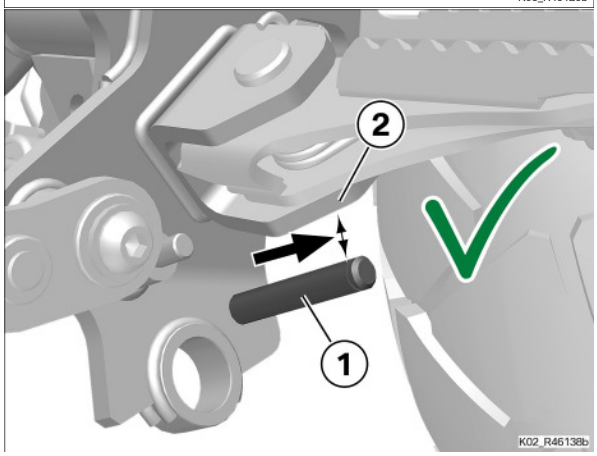

- Check if there is distance between bolts **(1)** in the footrest bracket **(2)**.

Check Result
Distance is not there (bolts/footrest bracket have contact) or the bearing bush is damaged/deformed.

Measure
- Create a Puma case, do not carry out any repairs.

Result
Clear distance is present.

Measure
- Retrofit the bearing support for the side stand.

© 2018, BMW of North America, LLC.
The contents of this document are confidential and should not be shared with third parties for distribution.
All prices subject to change without notice.

8

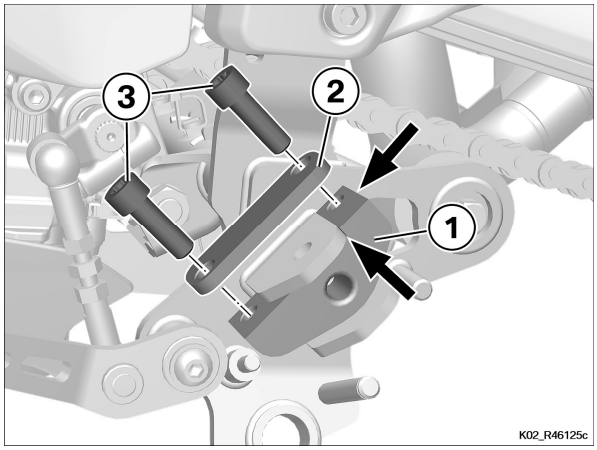

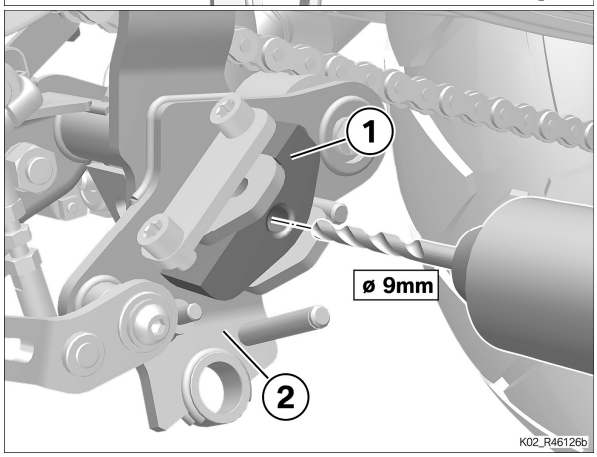

Installing the drilling template and drilling the frame (for the bearing support of the side stand)

- Fix drilling template "**A**" **(1)** from set (46 5 680).
- Secure drilling template **(1)** and counter support **(2)** with screws **(3)**.
- Align drilling template **(1)** **(Arrows)** and tighten screws **(3)**.

- Using drilling template **(1)**, drill frame **(2)** and while doing so, lubricate/cool with cutting oil.

Technical data			
Bore hole diameter for the reinforcement of the side stand		9 mm	

- Remove drilling template **(1)**.
- Clean bore hole with compressed air.

9

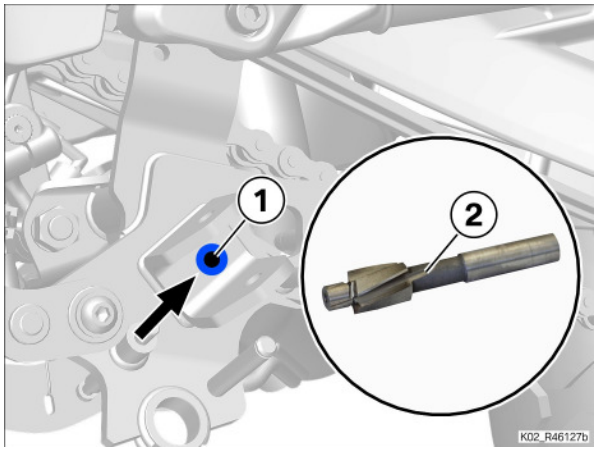

Milling the frame bore holes even and painting them

- Carefully mill bore holes **(1)** even with the frame using the delivered milling tool **(2)**.

» Mill until the milling covers the entire drilled are **(Arrows)** and, if required, also even down the weld seam.

© 2018, BMW of North America, LLC.
The contents of this document are confidential and should not be shared with third parties for distribution.
All prices subject to change without notice.

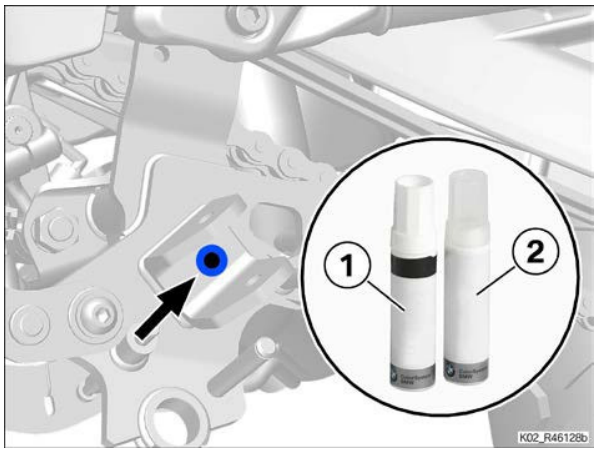

- Clean bore holes **(Arrow)** and degrease.
- Paint the bore holes **(Arrows)** and milled surfaces with repair paint **(1)** and clear paint **(2)**.

» No bright metal surfaces may remain visible, comply with the drying times.

10

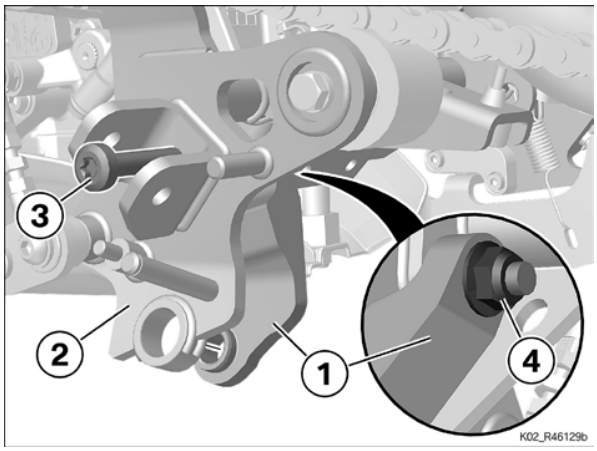

Installing pivot mount for side stand

- Insert bearing support **(1)** into frame **(2)**.
- Install bolt **(3)** and nut **(4) hand-tight**.

11

Installing the side stand and tightening the bearing support

ATTENTION

Damage of the bearing due to lubricants.
Component damage, stiff movement

- Lubricants can damage the coating chemically.
- Lubricant bind dirt particles and increase the wear by this.
- A PTFE-bearing is maintenance free; do not lubricate the bearing.

© 2018, BMW of North America, LLC.
The contents of this document are confidential and should not be shared with third parties for distribution.
All prices subject to change without notice.

Retrofitting the bearing support for the side stand

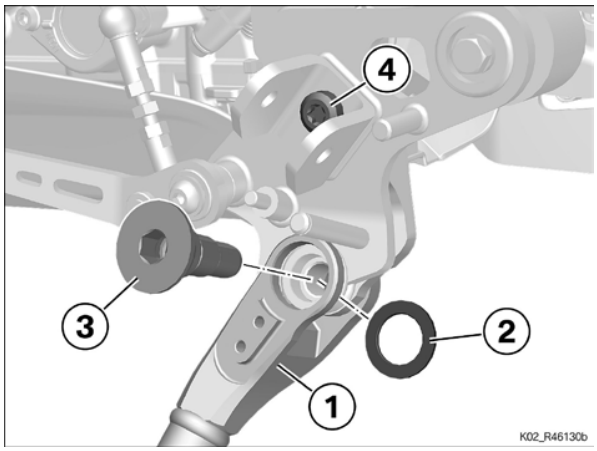

- Position side stand **(1)** with contact disc **(2)**.
- Install screw **(3)** with screw lock.

Tightening torques		
Side stand to frame and bearing support		
M14 x 1.5 Thread-locking compound (Loctite 270, High strength)	80 Nm	

- Tighten screw **(4)**.

Tightening torques		
Pivot mount to frame		
M8	28 Nm	

Check

- Check side stand for ease of movement.

Result

Side stand jams or does not reach the limit position.

Measure

- Loosen screws and tighten once again.
- Check the contact surfaces on the frame for unevenness/welding spatter and rework if required.

◀

12

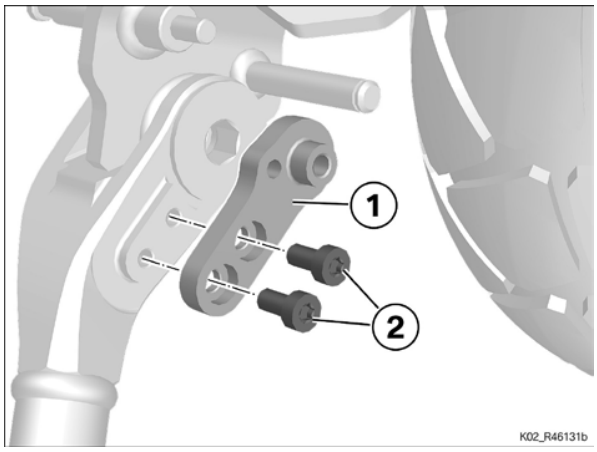

▶

Installing the adapter for the side-stand switch

- Clean the threads.
- Secure adapter **(1)** with screws **(2)**.

Tightening torques		
Adapter for side-stand switch to side stand		
M5 x 10 Thread-locking compound (Loctite 243, Medium strength)	5 Nm	

◀

© 2018, BMW of North America, LLC.
The contents of this document are confidential and should not be shared with third parties for distribution.
All prices subject to change without notice.

13

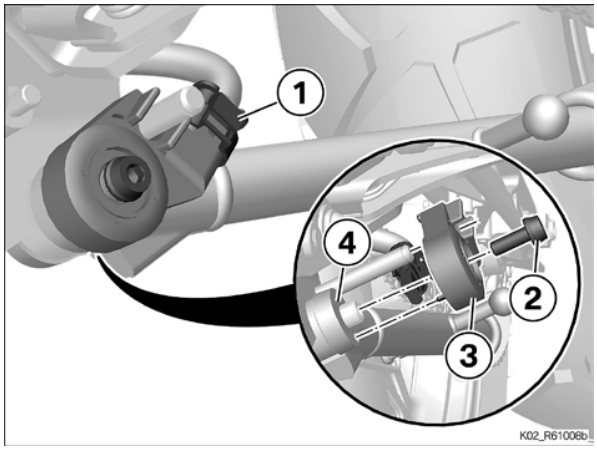

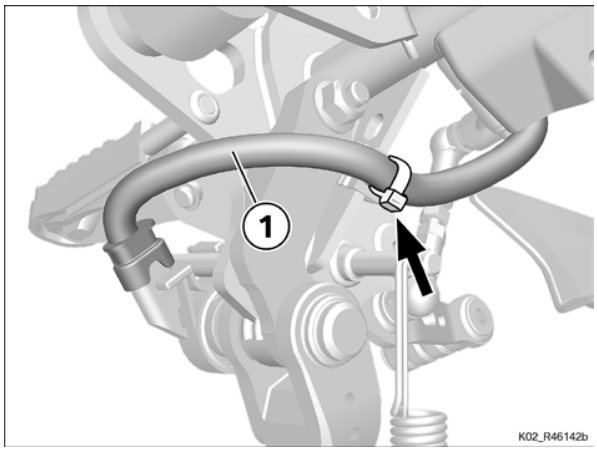

Installing side-stand switch

- Clean the threads.
- Position side-stand switch **(3)** on side stand **(4)** and install bolt **(2)**.

Tightening torques		
Side-stand switch to side-stand screw		
M6 x 16, Replace screw Thread-locking compound (Micro-encapsulated)	6 Nm	

- Connect connector **(1)** for side-stand switch.
- Check the routing of cable **(1)** and correct using cable straps **(Arrows)** if required.

14

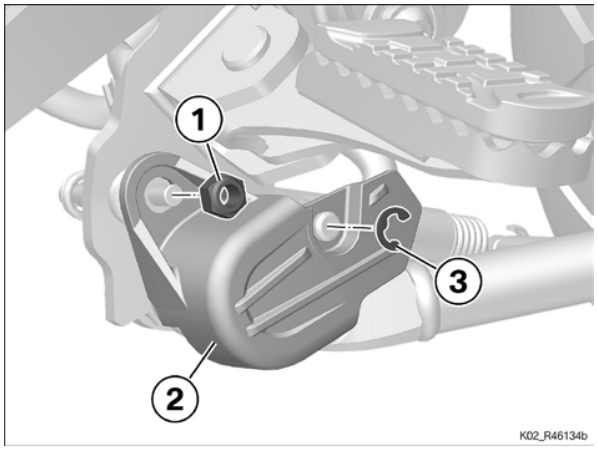

Installing the cover of the side-stand switch

- Clean nut **(1)** and apply screw lock.

Thread-locking compound	
Loctite 243, Medium strength	83 19 2 210 339

- Position cover **(2)** and install nut **(1)**.

Tightening torques		
Cover for side-stand switch to frame		
M6, Reuse the nut with screw lock Thread-locking compound (Loctite 243, Medium strength)	3 Nm	

- Install the circlip **(3)**.

© 2018, BMW of North America, LLC.
The contents of this document are confidential and should not be shared with third parties for distribution.
All prices subject to change without notice.

15

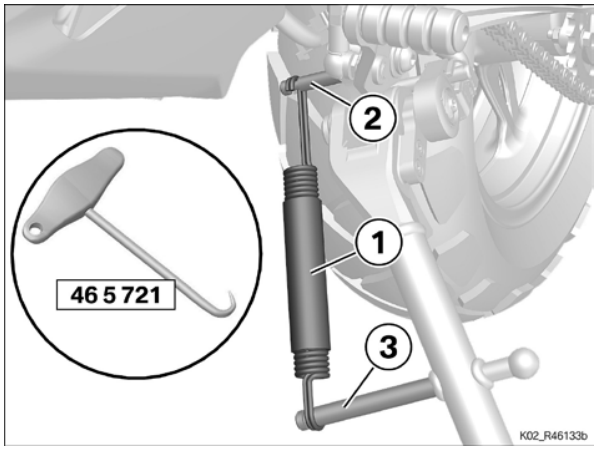

Installing tension springs for side stand

- Attach tension springs **(1)** with hooks (46 5 721) to frame **(2)** and attach side stand **(3)**.

16

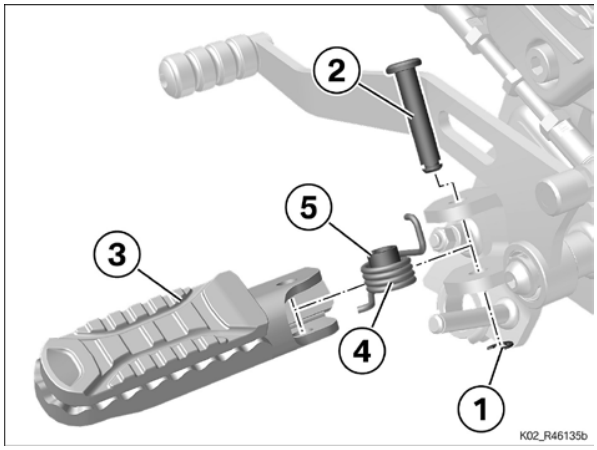

Install the front left footrest

- Lubricate bolt **(2)** and footrest **(3)**.

Lubricant	
Staburags NBU 30 PTM	07 55 9 056 992

- Insert spring **(4)** with sleeve **(5)** in footrest **(3)**.
- Hold footrest **(3)** in position.
- Install bolts **(2)**.
- Install retaining clip **(1)**.

© 2018, BMW of North America, LLC.
The contents of this document are confidential and should not be shared with third parties for distribution.
All prices subject to change without notice.

17

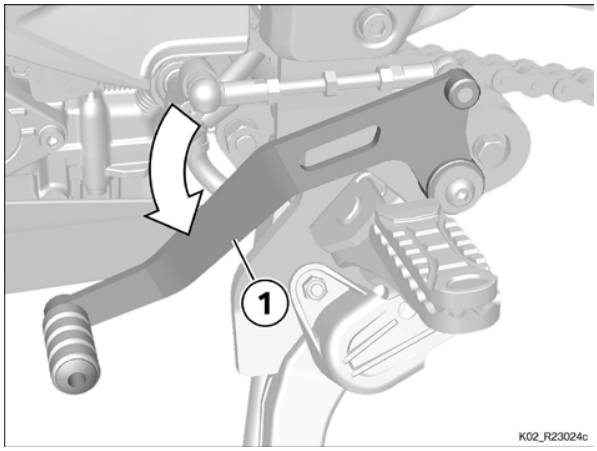

Securing gearshift lever and gearshift linkage

- Swing gearshift lever **(1)** to the front.

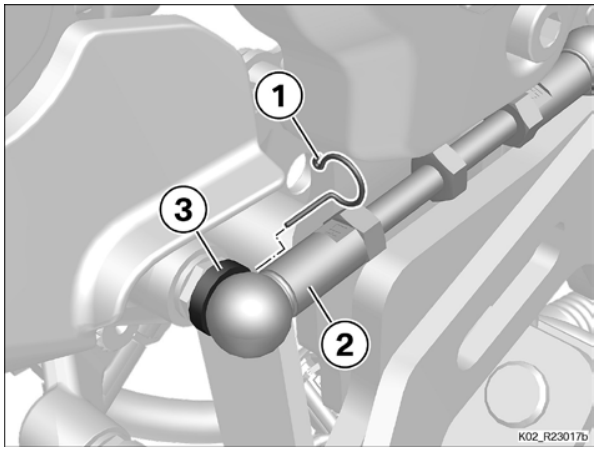

- Push gearshift rod **(2)** on ball head **(3)**.
- Install retaining clip **(1)**.

18

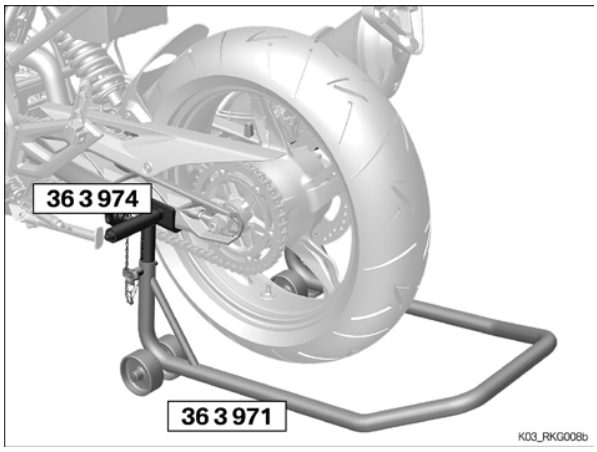

Removing motorcycle from rear-wheel stand

- Extend the side stand.

ATTENTION

Vehicle toppling to side

Risk of damage to parts if vehicle topples

- Make sure that the vehicle is secured so that it cannot topple sideways.

- If applicable, remove the straps.
- Secure the vehicle to ensure that it cannot topple and slowly lower it, remove rear-wheel stand (36 3 971).
- Place the motorcycle on its side stand.

© 2018, BMW of North America, LLC.
The contents of this document are confidential and should not be shared with third parties for distribution.
All prices subject to change without notice.