October 14, 2026 Version 7

Safety Recall: Takata Driver's Airbag Inflator

Supersedes version 6 to revise the information at:

- Under PARTS INFORMATION, information was updated.
- Under WARRANTY CLAIM INFORMATION, information was updated.

AFFECTED VEHICLES

Year	Model	Trim	VIN Range
2013–14	ILX	ALL	Check the iN VIN status for eligibility
2013–14	ILX Hybrid	ALL	Check the iN VIN status for eligibility
2007–14	RDX	ALL	Check the iN VIN status for eligibility
2005–12	RL	ALL	Check the iN VIN status for eligibility
2009–14	TL	ALL	Check the iN VIN status for eligibility
2010–13	ZDX	ALL	Check the iN VIN status for eligibility

BACKGROUND

In certain vehicles, the driver's (front) airbag inflator could produce excessive internal pressure during airbag deployment. If an affected airbag deploys, the increased internal pressure may cause the inflator casing to rupture. Metal fragments could pass through the airbag cushion material, possibly causing injury or fatality to vehicle occupants.

All affected vehicles are on stop sale and cannot be sold until the inflator is repaired with a counter measured part.

CLIENT NOTIFICATION

Owners of affected vehicles have been sent a notification of this campaign.

Do an iN VIN status inquiry to make sure the vehicle is shown as eligible.

Some vehicles affected by this campaign may be in your new or used vehicle inventory.

Failure to repair a vehicle subject to a recall or campaign may subject your dealership to claims or lawsuits from the client or anyone else harmed as a result of such failure. Furthermore, state law may provide American Honda with the right to seek indemnification in any such claim or lawsuit. To see if a vehicle in inventory is affected by this recall, do a VIN status inquiry before selling it.

CORRECTIVE ACTION

Replace the driver's airbag inflator, then return the original, undeployed inflator as directed.

NOTE: There are different methods to remove the airbag inflator. **Follow the correct repair for the model and year you are working on**.

CLIENT INFORMATION: The information in this bulletin is intended for use only by skilled technicians who have the proper tools, equipment, and training to correctly and safely maintain your vehicle. These procedures should not be attempted by "do-it-yourselfers," and you should not assume this bulletin applies to your vehicle, or that your vehicle has the condition described. To determine whether this information applies, contact an authorized Acura automobile dealer.

© 2026 American Honda Motor Co., Inc. – All Rights Reserved

REQUIRED TOOLS

Tool Name	Part Number	Quantity
Bulldog Metal Snips	MWT6716B	1
1-inch 12-point socket	Commercially available	1

NOTE:

- The metal snips have smaller jaws compared to regular tin snips to give you better mechanical advantage and allow the snips to fit in the tight area around the airbag.
- Make sure you use these snips to minimize the amount of debris created. Never allow any debris to fall into the airbag while the inflator is out of the airbag.
- Replace the snips when they are dull. Dull snips may contribute the horn plate being bent or creating small pieces of metal that could get into the airbag.
- If you need a replacement or more snips, contact the Tool and Equipment Program at 888-424-6857.

PARTS INFORMATION

Part Name	Part Number	You may receive any of the following	Quantity
2013–14 ILX Hybrid Driver's Airbag Inflator Kit	04770-TV9-405	04770-TV9-405	1
2013–14 ILX Driver's Airbag Inflator Kit	04770-TV9-405	04770-TV9-405	1
2007–12 RDX Driver's Airbag Inflator Kit	04770-SWA-405	04770-SWA-405 or 04770-SWA-G00	1
2013–14 RDX Driver's Airbag Inflator Kit	04770-TV9-405	04770-TV9-405	1
2005–12 RL Driver's Airbag Inflator Kit	04770-SJA-405	04770-SJA-405	1
2009–14 TL Driver's Airbag Inflator Kit	04770-TF0-405	04770-TF0-405	1
2010–13 ZDX Driver's Airbag Inflator Kit	04770-TF0-405	04770-TF0-405	1

NOTE:

- The inflators appear similar, but may have different rates of inflation. **Make sure you install the correct inflator for the vehicle you are working on**.
- Always use new Torx bolts to reinstall the airbags. The new Torx bolts are coated with threadlock to make sure they do not come loose.
- The inflator kit box must be used to return the old inflator to its supplier. Be careful not to damage the inflator kit box.
- If the defective, undeployed inflator is not returned, the warranty claim for that vehicle will be charged back to your dealership.
- To return the inflator, follow the instructions in PIB A15-0006, *Inflator Kit Return Process*.
- Parts staff can scan the part number and serial number from the outside of the box into the warranty claim by using the Controlled Part Serial No. screen and scanning the applicable information. Refer to the Job Aid **Ordering and Managing Replacement Inflators** for more information.

WARRANTY CLAIM INFORMATION

NOTE:

- To avoid a warranty claim being charged back to your dealership, the defective, undeployed inflator must be returned to its supplier. Follow the shipping instructions in PIB A15-0006, *Inflator Kit Return Process*.
- The **replacement inflator part number and serial number** are printed on the label that should be attached to the RO.
- To avoid non-payment of warranty claims, the new airbag inflator part number and serial number must be included in each claim. For more information, refer to step 5 of REPAIR PROCEDURE.
- The serial number is encoded into the bar code printed on the label inside of the box and on a label attached to the outside of the box. If your dealership uses a scanner, you can scan the serial number from either place into the claim.
- The part number is encoded into a barcode attached to the outside of the box. If your dealership uses a scanner, you can scan the part number into the claim.
- **If you confuse the serial number and part number when entering the claim information,** your claim will automatically be rejected.
- For more information about scanning and filing airbag inflator recall claims, refer to **Ordering and Managing Replacement Inflators**. From the iN, select **Service**, **Warranty**, then **Claims Reference Guide**. Under **HOT TIPS/TOPICS**, select **Ordering and Managing Replacement Inflators.**
- **If you did this bulletin for the 2015–16 ILX or RDX on or before February 16, 2017, use the 2013–14 ILX or 2013–14 RDX warranty information. Any repairs made after February 16, 2017, you must use service bulletin 17-004, *Safety Recall: 2015–16 ILX and RDX Takata Driver's Airbag Inflator*.**

Year/Model	Operation Number	Replacement Part Number	Flat Rate Time	Defect Code	Symptom Code	Template ID	Failed Part Number
2013–14 ILX Hybrid	7521K3	04770-TV9-405	0.6 hr	6ZZ00	JY200	16-010N	77810-TX6-A80ZA
2013–14 ILX							
2007–12 RDX	7521K3	04770-SWA-405	0.6 hr	6ZZ00	JY200	16-010P	77810-TX6-A80ZA
		04770-SWA-G00	0.6 hr	6ZZ00	JY200	B16010T	77810-TX6-A80ZA
2013–14 RDX	7521K3	04770-TV9-405	0.6 hr	6ZZ00	JY200	16-010Q	77810-TX6-A80ZA
2005–12 RL	7521K3	04770-SJA-405	0.5 hr	6ZZ00	JY200	16-010R	77810-TX6-A80ZA
2009–14 TL	7521K3	04770-TF0-405	0.6 hr	6ZZ00	JY200	16-010S	77810-TX6-A80ZA
2010–13 ZDX							

REMOVE AND INSPECT THE AIRBAG

- If the VIN status inquiry indicates that the vehicle is subject to any open safety recalls, including a passenger's airbag inflator campaign/recall, make sure to also complete those recall repairs before returning the vehicle to the customer. If you are unable to complete any open recall, advise the customer of the recall status and when the recall could be completed.
- Be careful not to damage any parts when replacing the inflator and **follow the procedure exactly**.
- If, before removing the airbag, you suspect that it may be the incorrect airbag for the vehicle or a counterfeit, **do not remove the airbag**. Contact your DPSM for assistance.
- Make sure you have reviewed the SRS Precautions and Procedures in the service information before doing the REPAIR PROCEDURE.

1. Turn the ignition switch to the ON (II) position and check if the SRS indicator comes on for about 6 seconds, then goes off.
   - If the indicator comes on, then goes off after about 6 seconds, go to step 2.
   - If the indicator does not come on, or if it stays on, contact your DPSM for assistance.
2. Disconnect the battery negative cable and wait at least 3 minutes before continuing.
3. Remove the driver's airbag. Refer to the service information.
4. Place the airbag, face down, on a clean shop towel. Visually inspect the airbag and the inflator for any unusual writing or markings.

"IDENTIFYING COUNTERFIT AIRBAGS"
VIDEO

- If there is nothing unusual about the airbag or the inflator, go to step 5.
- If there are any unusual markings, like an incorrect label or a model year written in marker, the airbag and inflator may not be the correct airbag and/or inflator for the vehicle or it may be a counterfeit part. For more information about counterfeit airbags, you can refer to *safercar.gov*, enter keywords **MANAGING COUNTERFEIT**, and select **Recommended Dealer Guidance for Managing Counterfeit Air Bags** from the list. **If you suspect that the airbag or inflator is counterfeit, do not continue this procedure**. Contact your DPSM for assistance.

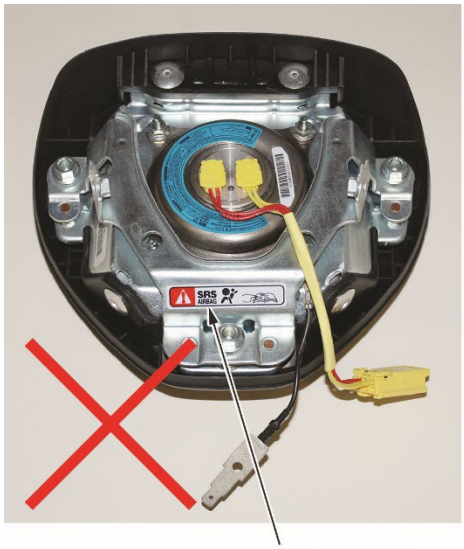

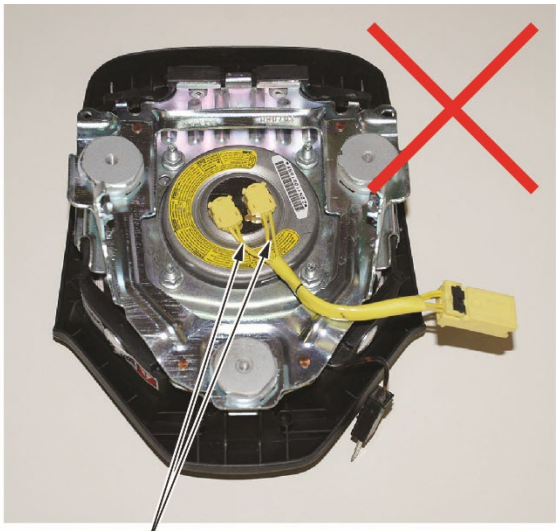

5. Peel the label located inside the inflator box from its backing and attach it to the RO. For the warranty claim to be paid, the **replacement inflator part number that you received** must be included in the warranty claim.

   NOTE:

   - The replacement part number is printed on the top part of the label and the serial number is printed on the bottom. **Make sure you attach the label to the RO and give it to the warranty clerk**.
   - There may also be a colored sticker located in the kit; ignore it because it is not used.
   - Not all inflator kits have a label included. In those cases, write the serial number and part number from the side of the inflator box on the RO. The part number always starts with 047.

INFLATOR PARTS BOX

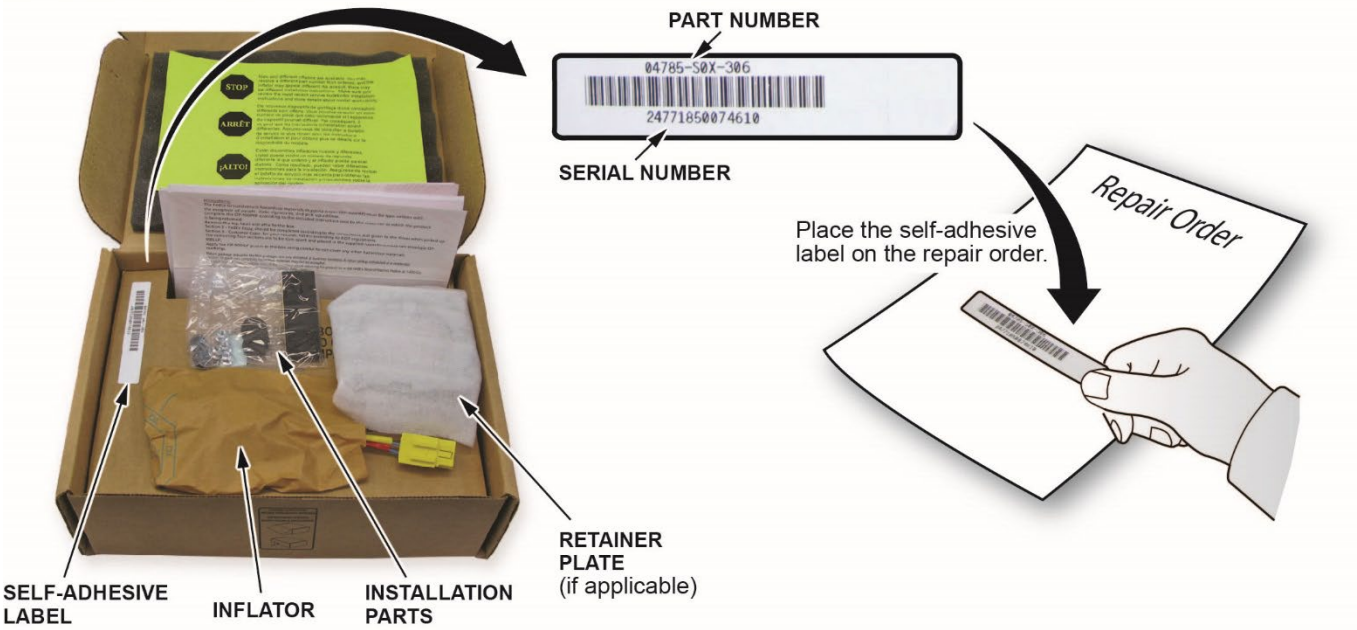

6. Remove the horn plate, cut the horn plate, or no action is needed to access the inflator **(depending on model applicability)**.

   On some vehicles, you can remove the inflator without having to remove or cut the horn plate. On other vehicles, the horn plate needs to be cut or removed because it blocks the inflator. **Make sure you use the correct method for the vehicle you are working on**. Refer to the video for more information.

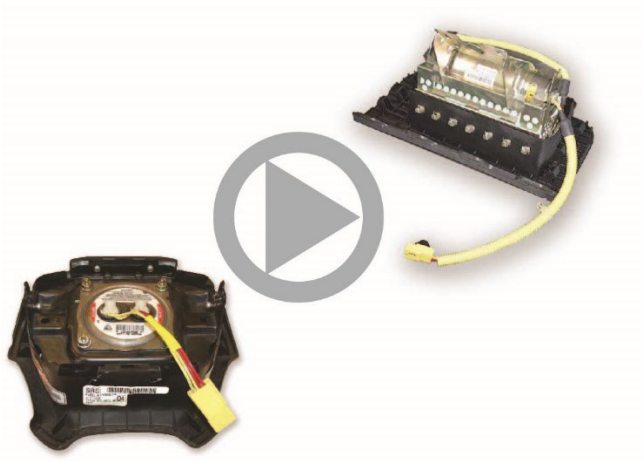

2005–12 RL – You can remove the inflator without removing or cutting the horn plate. Go to step 7.

2007–12 RDX, 2009–14 TL, 2010–13 ZDX- Cut the horn bracket plate

- Using a marker, draw a line on the horn plate as shown.

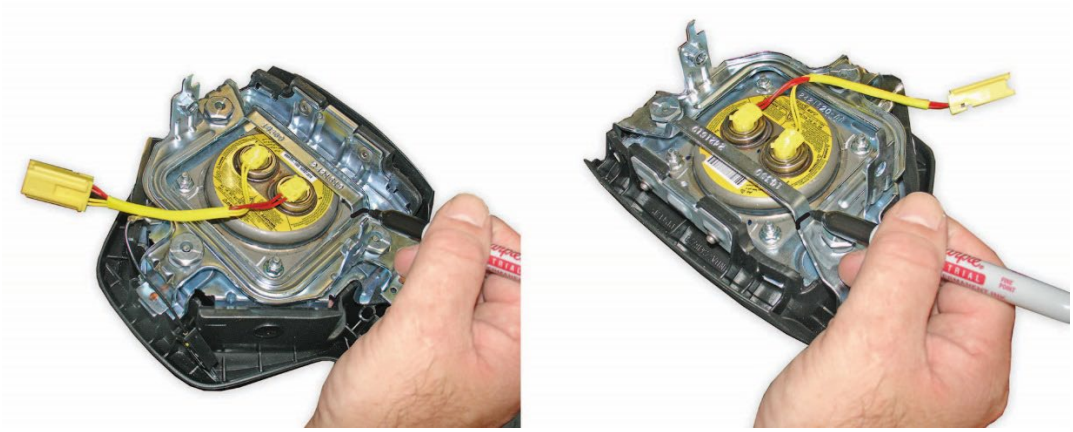

- Using the snips, cut along the line drawn.
  NOTE: Always use sharp snips. If they are dull and you twist or wiggle them back and forth, you may warp the horn plate, which would require a new airbag module.

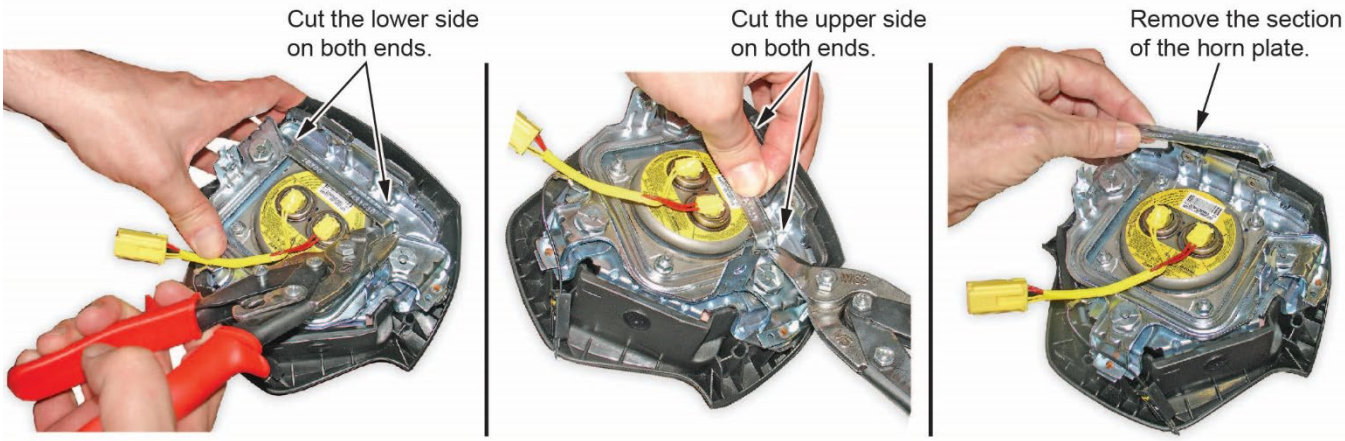

- Take the felt tape and cut it into two pieces. Apply to the cut surface for protection.
  NOTE:
  - Do not file the metal edges.
  - Make sure the felt tape does not interfere with the horn plate or horn plate springs.

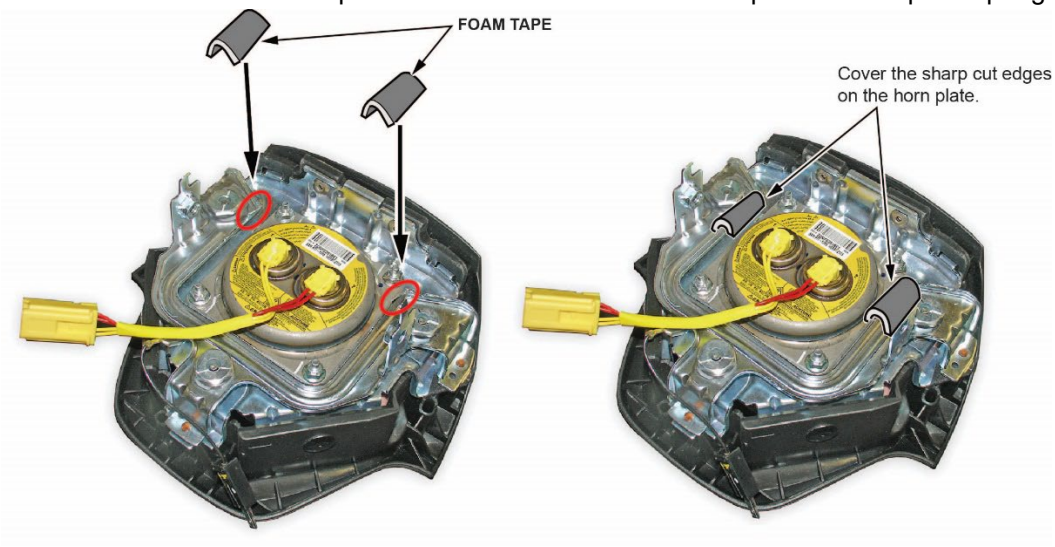

- Measure the space between the two copper contacts on the horn plate as shown. The space should be between 1.1 and 1.9 mm.
  NOTE: There is a copper contact on each side of the airbag module.
  - If the spaces are within specification, write the measurements on the side of the horn plate.
  - If either of the spaces is out of specification, try to correct it. If the space is too large, use a pair of pliers to close the space, or if the gap is too small, use a flat headed screwdriver to open it up so that the copper contacts are within specification. Write down the measurement on the side of the horn plate.

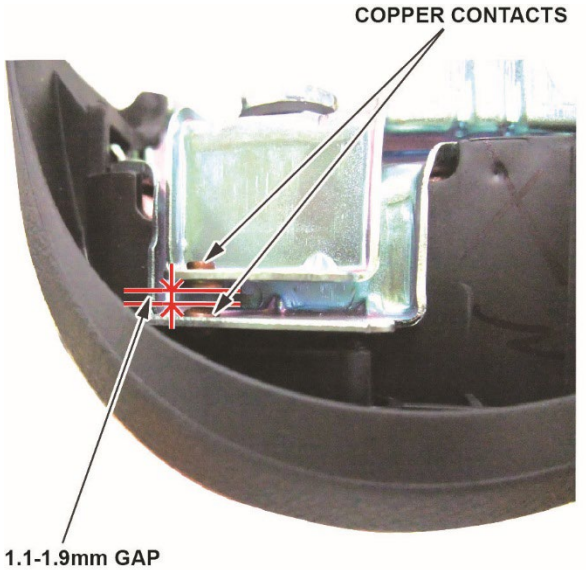

- 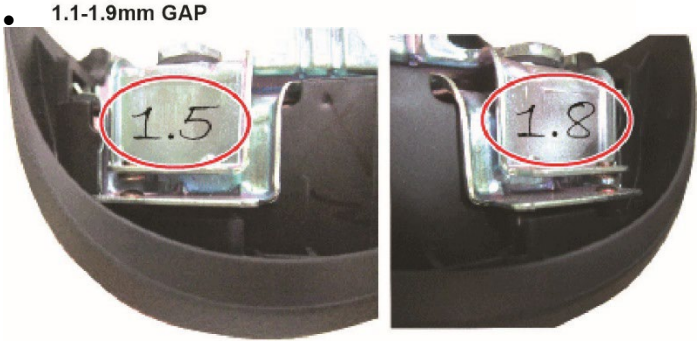

2013–14 ILX Hybrid, 2013–14 ILX, and 2013–14 RDX – Remove the horn bracket

NOTE: Do not lose any of the small rubber washers or springs for the horn plate; they are not available separately.

- Evenly loosen the three bolts using the 1-inch socket.

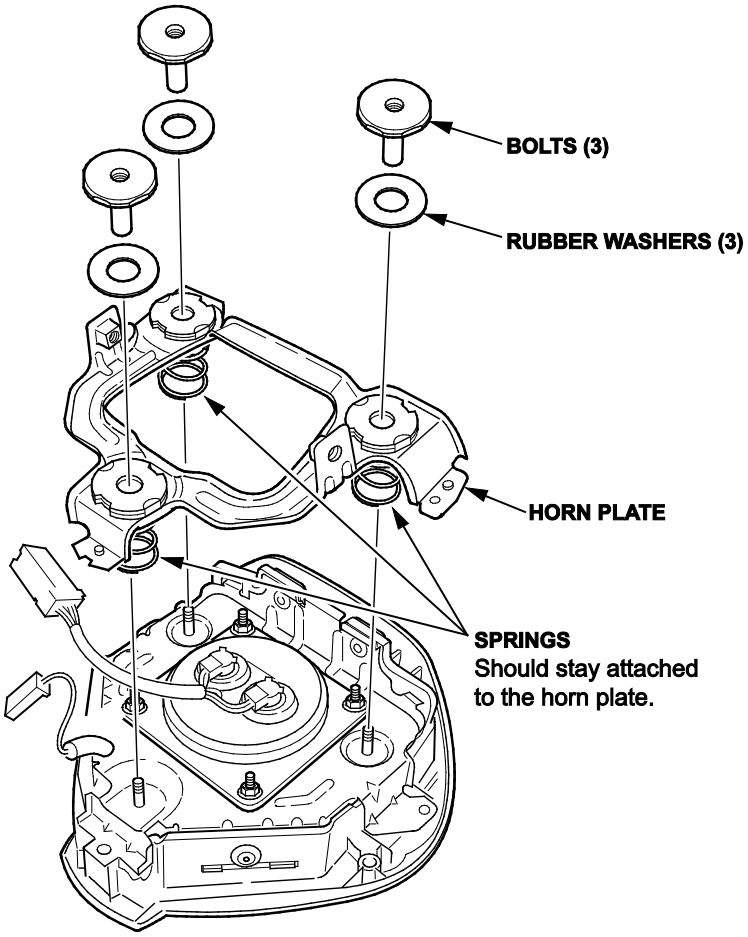

- Remove the 3 bolts. Make sure you do not drop or lose the 3 black rubber washers.
- Remove the horn plate. Be careful that the 3 springs stay attached to the horn plate. If the springs come loose, reinstall as needed and set aside the horn plate and components until reassembly.

7. Remove the 4 locknuts from the airbag using needle-nose vise grips or a 3/8 in. 6-point socket. The locknuts will not be reused.

   NOTE: Do not remove the inflator from the airbag until you complete step 8.

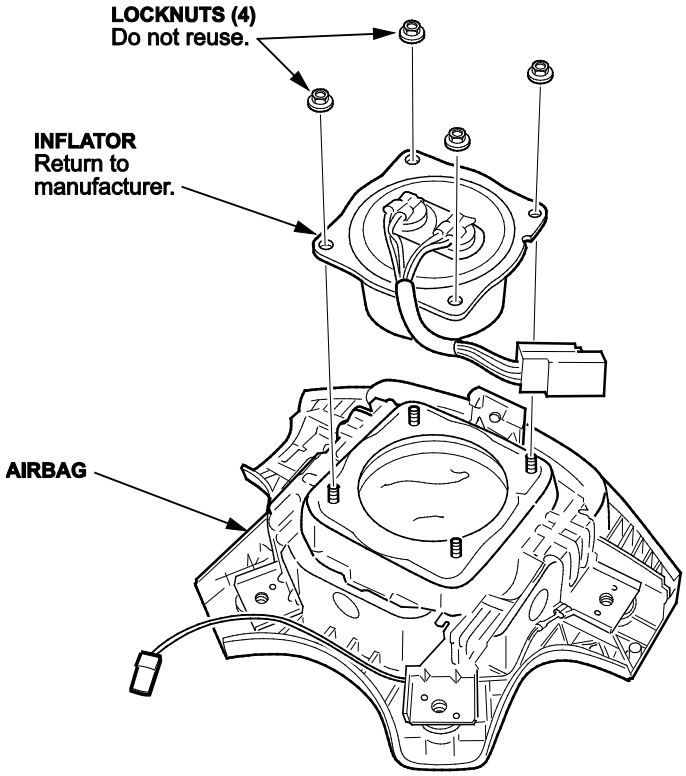

8. Use shop air to clean any debris that may be on the inflator, then remove the inflator from the airbag.

   NOTE:
   - Do not allow any debris to enter the inflator opening in the airbag.
   - Do not deploy the inflator. The inflator must be returned to its supplier in the box the new inflator came in. Follow the shipping instructions supplied with the inflator kit. If you have any questions about shipping, call Warranty Parts Inspection (WPI) at **937-642-2737**.
9. Turn over the airbag (inflator side down) and shake it to remove any debris from the inflator opening.

10. Install the new inflator in the airbag.

NOTE:

- If an airbag inflator label is included in the kit, make sure you affix the new label to the airbag module as shown.
- There may be some minor surface rust or corrosion on the new inflator; this is OK.

- Insert the inflator into the opening.

  NOTE:

  - Make sure the inflator wires are positioned toward the bottom of the airbag. If you install the inflator incorrectly, you may not be able to reconnect the SRS airbag harness.
  - The image shows the horn bracket removed like on the 2013–14 ILX Hybrid, 2013–16 ILX, and 2013–16 RDX. The other vehicles are similar.

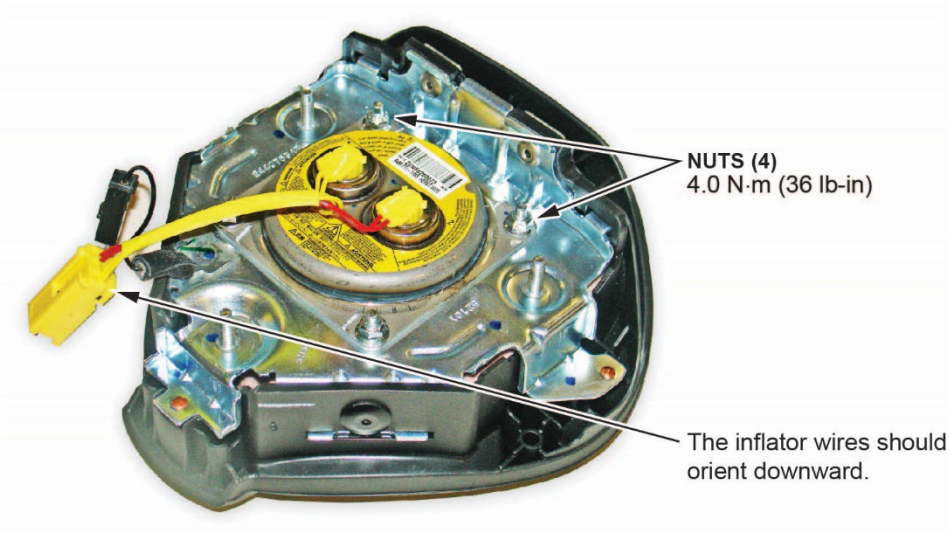

- Install and torque the new locknuts to **4.0 N·m (3.0 lb-ft, 36 lb-in)**.
- Attach the label in the inflator kit to the airbag module as shown.

ILX, ILX Hybrid, RDX, TL, ZDX:

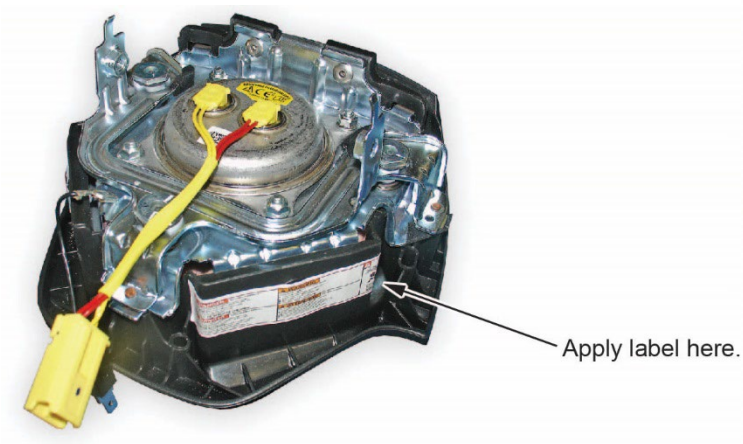

RL:

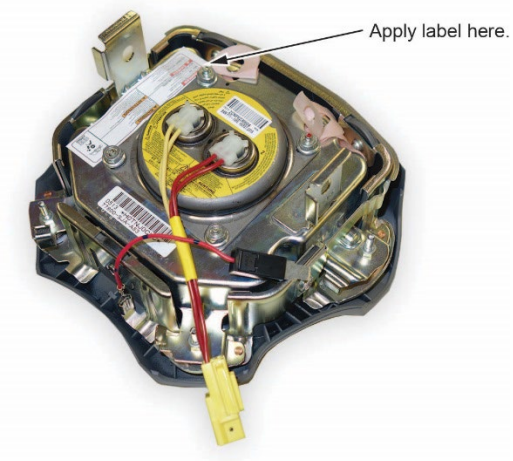

11. **2013–14 ILX Hybrid, 2013–14 ILX and 2013–14 RDX** - Reinstall the horn plate.
    - Make sure the three springs are mounted to the back side of the horn plate as shown. Make sure the rubber washers are installed on their respective bolts.

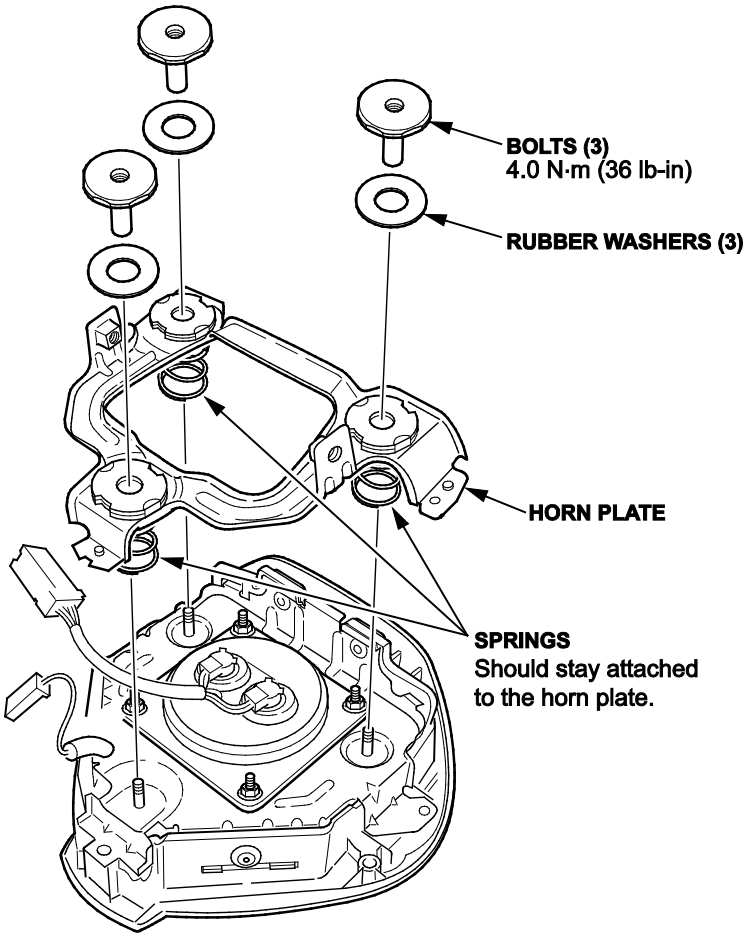

    - Install the horn plate on the airbag.
    - Install the 3 bolts and evenly tighten to **4.0 N·m (3.0 lb-ft, 36 lb-in).**

      NOTE: **Do not over-tighten the bolts** because you can break the studs and you will have to replace the airbag module.
12. Reinstall the driver's airbag using new Torx bolts from the kit and torque the bolts to **9.8 N·m (7.2 lb-ft)**. Refer to the service information.
13. Reconnect the battery negative cable and do the following:
    - Enter the anti-theft codes for the audio system and the navigation system (if equipped).
    - Press and hold the audio unit power button to exit the anti-theft mode.
    - Set the clock (on vehicles without navigation).
14. Start the vehicle and check that the SRS indicator comes on for about 6 seconds, then goes off.
15. Give your warranty clerk the RO that includes the replacement inflator serial number and replacement part number. For the warranty claim to be paid, the **replacement inflator part number** must be included in the warranty claim.