IMPORTANT UPDATE

TECHNICAL INSTRUCTIONS

FOR

SAFETY RECALL DSC and ELG

(Note: These technical instructions may be used on any vehicle covered under DSC or ELG)

FRONT PASSENGER AIRBAG INFLATOR MODULE

CERTAIN 2002 – 2010 MODEL YEAR SC 430

Updated 04-18-2018

Update 04-18-2018
- **The parts section has been updated**

Update 05-22-2017
- **Part number updated for the 2007-2010 MY.**

Update 03-23-2017
- **Part number updated for the 2002-2006 MY.**

Update 03-01-2016
- **Updated to include the 2008-2010 MY.**

Update 12-18-2015
- **Updated inflator harness routing.**

Update 9-30-2015
- **2007 MY part numbers added.**

Update 5-12-2015
- **ELG has been expanded to include 2006 and 2007 MY SC 430 vehicles.**
- **The airbag/inflator scanning application screen shots have been updated.**

Update 2-24-15
- **DISCONTINUED: Passenger airbag disablement has been discontinued.**

All dealership associates involved in the recall process are required to successfully complete E-Learning course LSC13A. To ensure that all vehicles have the repair performed correctly; technicians performing this recall repair are required to have successfully completed E-Learning course LSC13B, in addition to LSC13A, and currently hold <u>at least one</u> of the following certifications levels:

- **MASTER SERVICE TECHNICIANS**
- **MASTER DIAGNOSTIC SPECIALISTS**

NOTE: To support additional service capacity, Lexus Certified and Senior Service Technicians, with <u>at least 36 months Lexus experience</u> AND <u>L652 course credit,</u> may also perform this repair following successful completion of course LSC13B.

NOTE: The videos in this document were created for DSC, but are used in this document to help supplement the technical instructions.

I. OPERATION FLOW CHART

The flow chart is for reference only. *DO NOT* use it in place of the full technical instructions. Follow *ALL* steps as outlined in the full technical instructions to confirm the campaign is completed correctly.

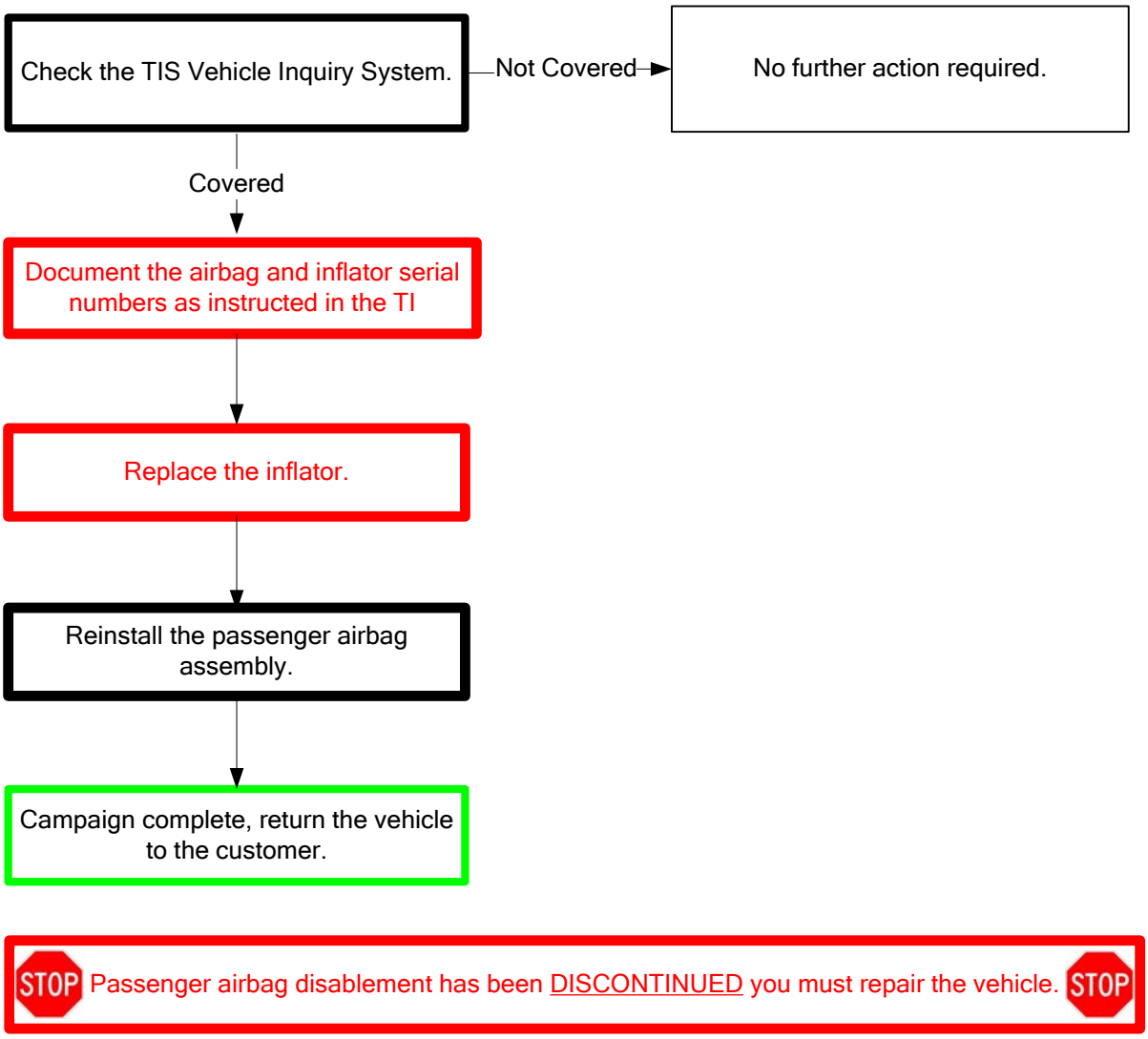

STOP Passenger airbag disablement has been DISCONTINUED you must repair the vehicle. STOP

II. BACKGROUND

The subject vehicles are equipped with front passenger airbag assemblies. When located in areas with consistently high absolute humidity, the front passenger airbag inflator could be susceptible to rupture in a crash. An inflator rupture may result in metal fragments striking and potentially seriously injuring the vehicle occupants. The cause of the potential ruptured inflators and influence of high absolute humidity are under investigation.

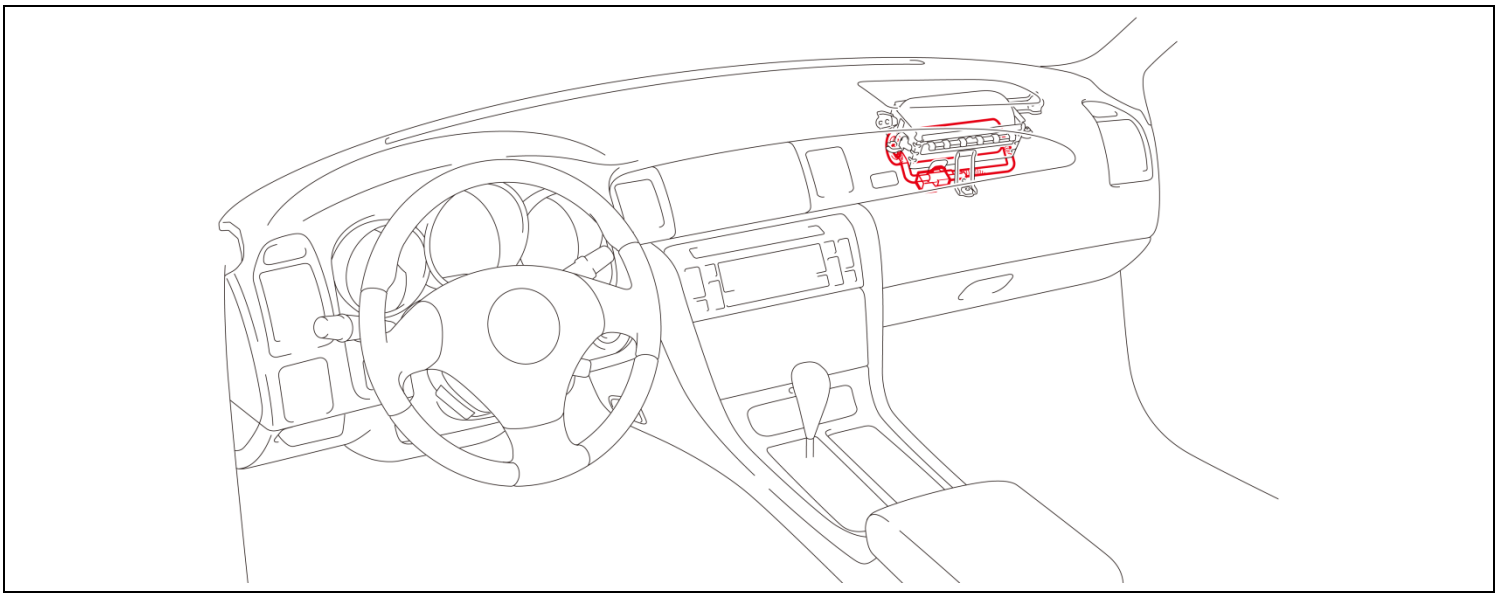

III. IDENTIFICATION OF AFFECTED VEHICLES

A. COVERED VIN RANGE

- Check the TIS Vehicle Inquiry System to confirm the VIN is involved in this Safety Recall, and that the campaign has not already been completed prior to dealer shipment or by another dealer.
- **TMS warranty will not reimburse dealers for repairs conducted on vehicles that are not affected or were completed by another dealer.**

IV. PREPARATION

A. PARTS

Only one inflator is required per vehicle, ensure that the correct part number is used so that the correct return shipping information is provided in the kit.

Applicable for: The 48 States in Continental U.S.

Part Number	Part Description	Quantity
04006-05324 2002-2006 MY	Instrument Panel Airbag Inflator Kit* (The 48 States in Continental U.S.)	1

*The kit above includes the following parts.

Inflator	1
Position Determining Plate	1
Self Locking Nut	4
Electro Tap	1

Part Number	Part Description	Quantity
04006-05424 2007 - 2010 MY	Instrument Panel Airbag Inflator Kit* (The 48 States in Continental U.S.)	1

*The kit above includes the following parts.

Inflator	1
Position Determining Plate	1
Self Locking Nut	4
Electro Tap	1

Applicable for: Alaska, Hawaii and USTT Locations

Part Number	Part Description	Quantity
04006-05324 2002-2006 MY	Instrument Panel Airbag Inflator Kit* (Alaska, Hawaii and USTT Locations)	1

*The kit above includes the following parts.

Inflator	1
Position Determining Plate	1
Self Locking Nut	4
Electro Tap	1

Part Number	Part Description	Quantity
04006-05424 2007 - 2010 MY	Instrument Panel Airbag Inflator Kit* (Alaska, Hawaii and USTT Locations)	1

*The kit above includes the following parts.

Inflator	1
Position Determining Plate	1
Self Locking Nut	4
Electro Tap	1

Non-Desiccated Part Recovery

Dealers should discontinue the installation of the non-desiccated parts listed below for recall, customer pay repairs AND over-the-counter sales (if applicable).

Model	Model Year	Part Number	Part Description
SC 430	2002-2010	73960-24010 73960-24030	AIR BAG ASSY, INSTR PNL PASS

Toyota requires all dealers to return any parts listed above that still remain in dealer inventory by utilizing the Hazmat Part Return Program available. Dealers will be issued a refund for all part returns. This part return program is outlined in *PANT Bulletin 2014-042*.

Important Note:

In order to return the inflator, packages must ***NOT*** be opened/tampered with.

B. TOOLS & EQUIPMENT

- Standard hand tools
- Molding remover set
- Torque wrench
- Techstream
- Electrical Tape
- Zip Tie

ELG CAMPAIGN TOOLS – These tools where previously provided to the dealership for campaign DLC and will be used for campaign ELG. These tools are required when performing this repair.

Image	Name	Quantity
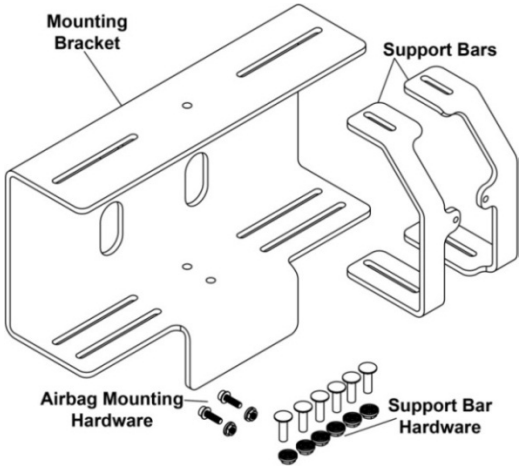	Airbag Mounting Bracket & hardware	1
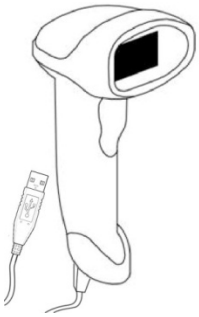	Barcode Scanner	1

NOTE: These tools *CANNOT* be ordered through the parts or tools system. There is a very limited supply of tools, but if additional tools are needed, contact your area representative.

V. SAFETY PRECAUTIONS

CRITICAL INFORMATION – READ THOROUGHLY

Failure to follow these procedures correctly could cause the SRS to unexpectedly deploy during servicing or the SRS may fail to operate correctly when required after reassembly. Confirm all work is performed as described in these instructions.

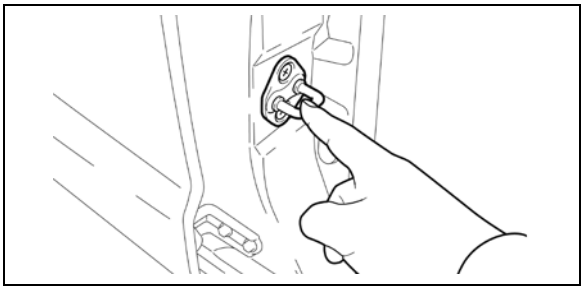

1. ELIMINATE STATIC ELECTRICITY

a) Before starting work and periodically while working on the vehicle, touch a metallic part of the vehicle to discharge static electricity in the body.

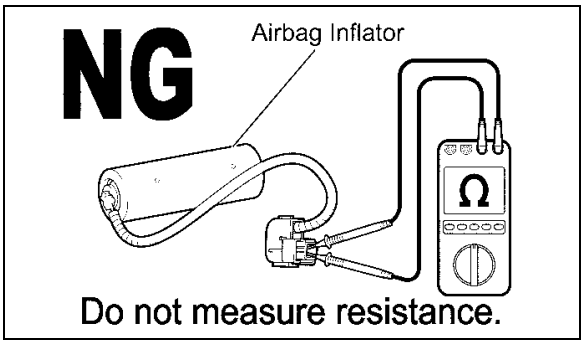

2. DO NOT MEASURE RESISTANCE

a) ***DO NOT*** measure resistance of airbag components, this may cause accidental activation.

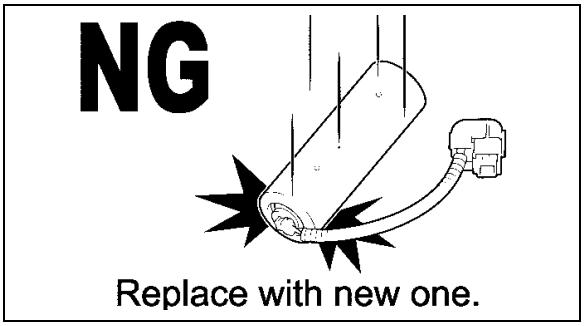

3. HANDLE THE AIRBAG CAREFULLY

a) If an inflator is dropped, replace it with a ***NEW*** inflator.

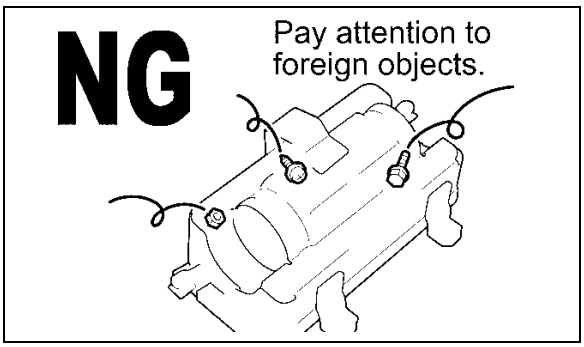

4. DO NOT ALLOW FOREIGN OBJECTS NEAR AIRBAG

a) Be sure to collect and account for all removed nuts/bolts to prevent them from landing in the airbag assembly.

b) Any foreign objects in the airbag assembly may cause damage or injury if the airbag is activated.

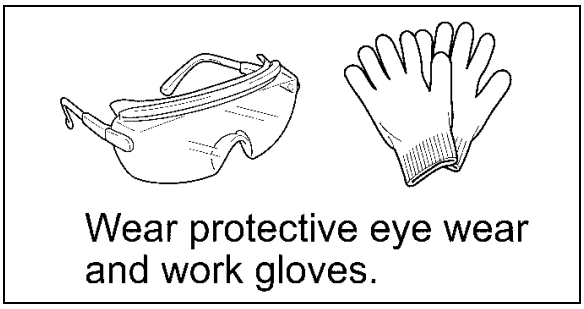

5. WEAR PROTECTIVE EQUIPMENT

a) Always wear appropriate protective equipment when working on the SRS.

VI. SRS SYSTEM HEALTH CHECK

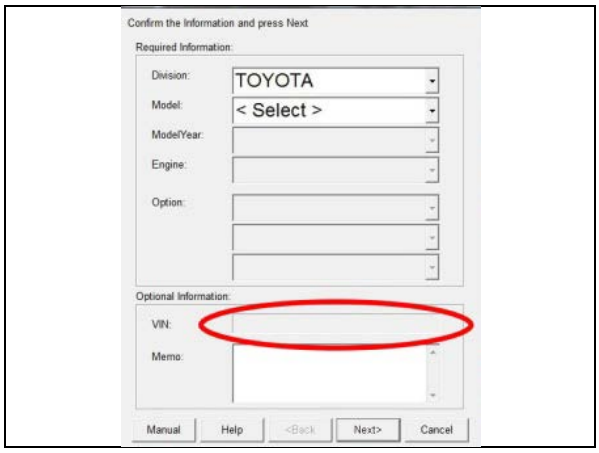

1. PERFORM A HEALTH CHECK

a) Confirm the Techstream is connected to the dealership's internet.

b) When launching the Techstream software the VIN ***MUST*** be entered manually.

NOTE: All letters of the VIN *MUST* be entered in ALL CAPS, or the VIN will need to be reentered when running the diagnostic report.

c) Perform a health check.

Note: The VIN may auto populate on the later model year vehicles, if this happens DO NOT change the VIN.

2. RUN A DIAGNOSTIC REPORT

a) After the health check has completed, run a diagnostic report by clicking on the link on the health check screen.

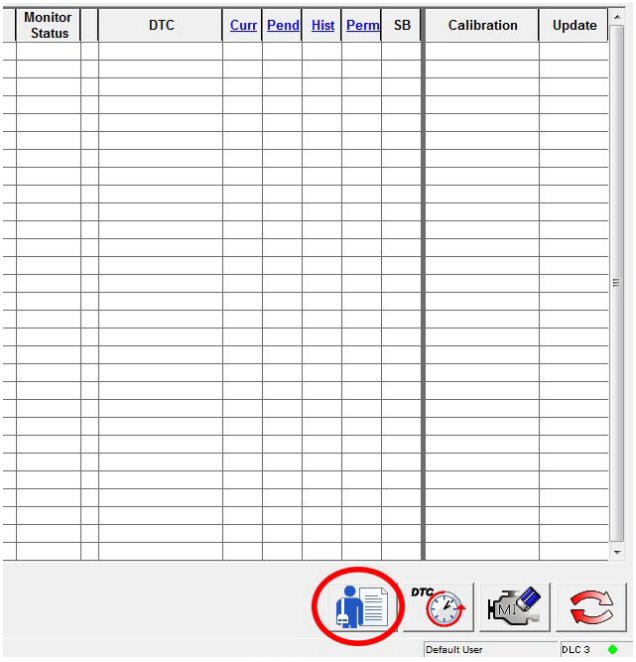

NOTE: If the VIN was not entered in ALL CAPS when Techstream was launched, an error will be displayed and there will be a prompt to reenter the VIN

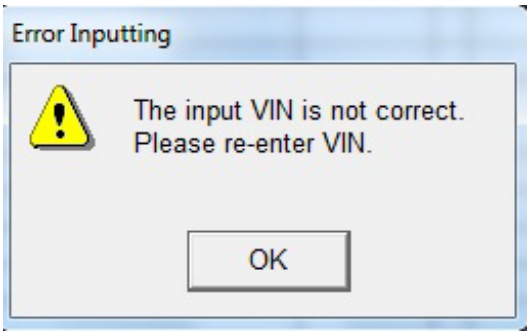

b) Enter the vehicle mileage and repair order information, then click the 'report' button.

- **The VIN *MUST* be entered manually in ALL CAPS when launching the Techstream software, the VIN *WILL NOT* auto-populate due to vehicle age.**
- **A health check and diagnostic report with VIN *MUST* be performed within the last 36 hours and recorded by TMS. If the diagnostic report is not run, the healthcheck will not be recognized by TMS.**
- **The serial number recording application will be disabled and the inspection cannot be completed if a health check and diagnostic report is not performed and recorded by TMS.**

VII. WORK AREA PREPARATION

CRITICAL INFORMATION – READ THOROUGHLY

The bracket assembly that was provided at the launch of SSC DLC is a critical added-safety feature that *MUST* be used when replacing the inflator module. Confirm the bracket assembly is installed securely in the vise and confirm the work area being used is appropriate. Before starting work and periodically while working on the vehicle, touch a metallic part of the vehicle to discharge static electricity in the body.

Confirm there are no loose objects or people exposed to the back side of the bracket for safety in the unlikely event of airbag deployment due to improper work procedures (Remember that the inflator ***IS NOT*** being replaced due to an inadvertent deployment concern).

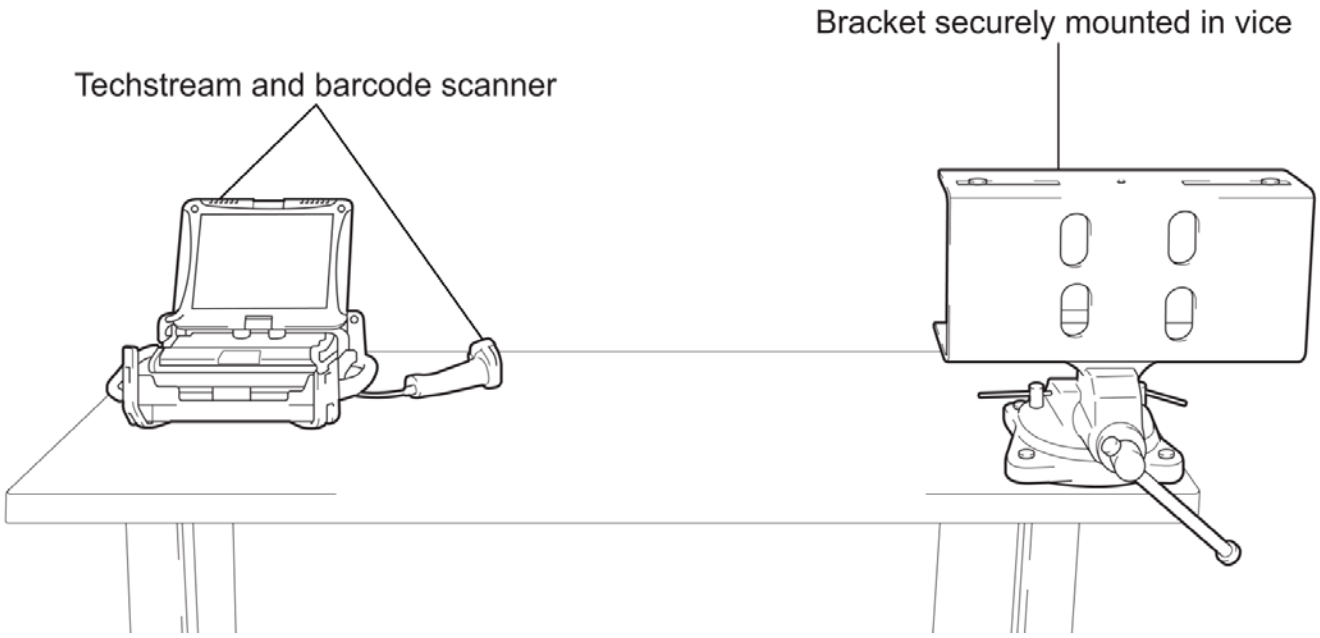

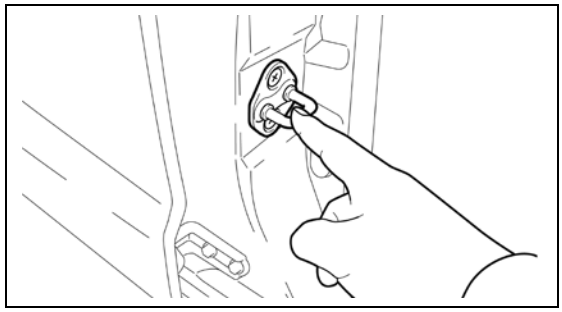

Before starting work and periodically while working on the vehicle, touch a metallic part of the vehicle to discharge static electricity in the body.

VIII. FRONT PASSENGER AIRBAG ASSEMBLY REMOVAL

1. DISCONNECT THE NEGATIVE BATTERY TERMINAL

STOP

- **Wait at least 90 seconds after disconnecting the cable from the negative battery terminal to prevent airbag and seat belt pretensioner deployment.**
- **Follow all precautions as outlined on TIS before servicing the SRS system.**

2. REMOVE THE INSTRUMENT PANEL SAFETY PAD SUB-ASSEMBLY

a) Refer to TIS for removal instructions

2002-2005 MY	2006 MY	2007 MY	2008 MY	2009MY 08/2008 – 10/2008 Production	2009MY 10/2008 – 08/2009 Production	2010MY

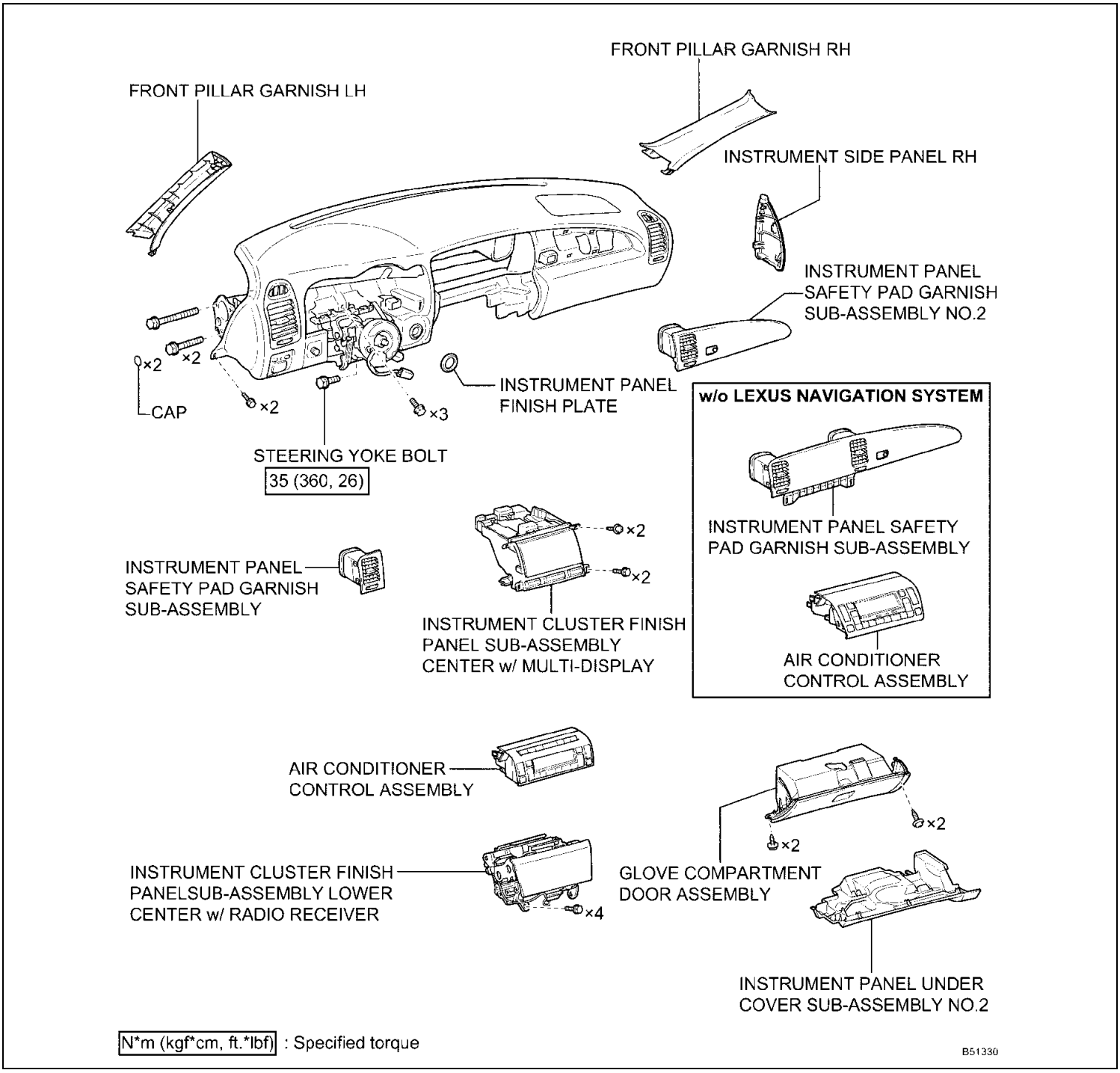

Removal instructions continued…

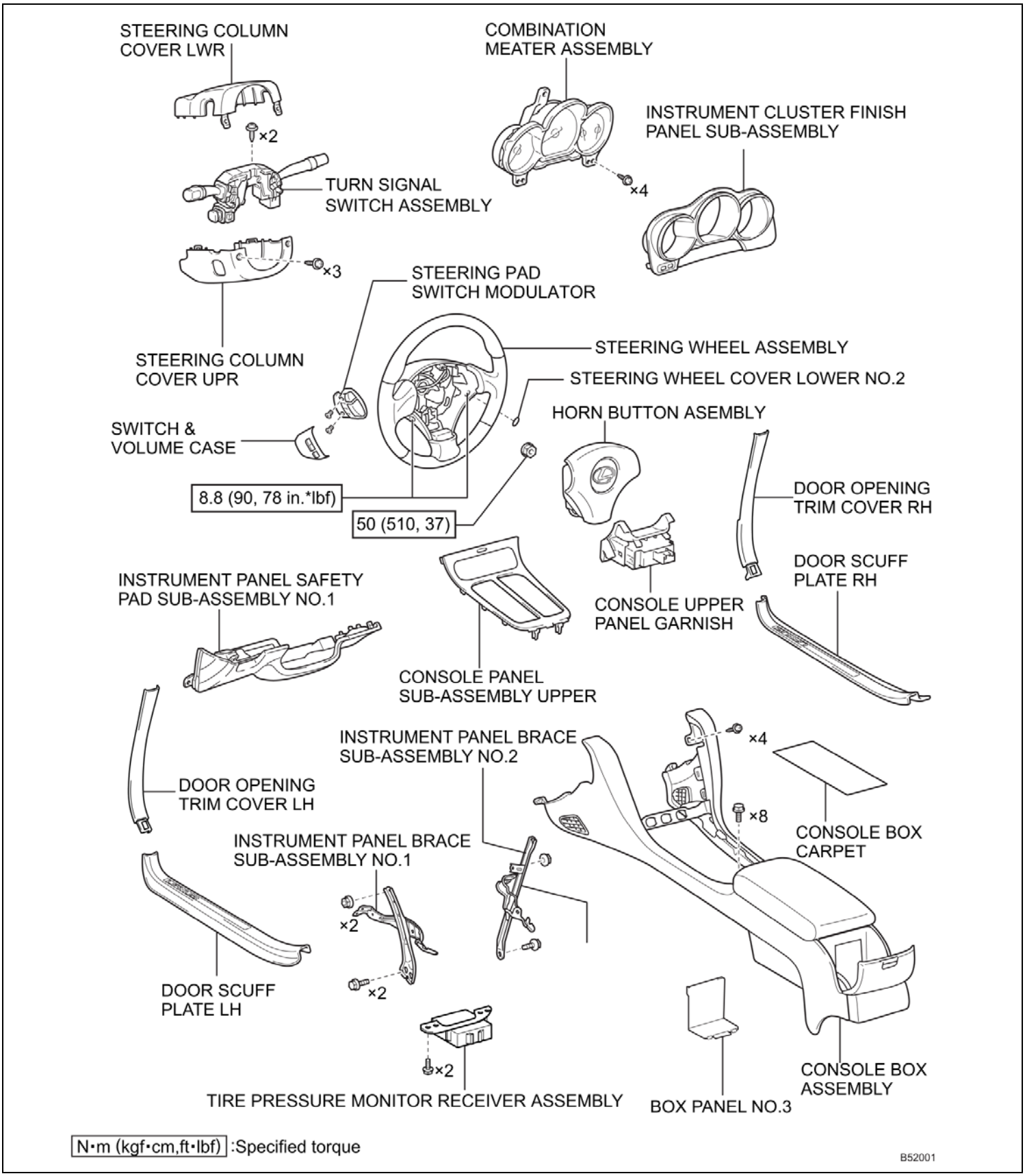

3. REMOVE THE AIRBAG FROM THE INSTRUMENT PANEL

a) Remove the 3 screws and the side defroster nozzle.

b) Remove the 2 screws and the heater to register duct.

c) Remove the 4 bolts, disengage the straps, and then remove the airbag assembly.

NOTE: Only remove the components highlighted in red; there is *NO NEED* to remove any other components.

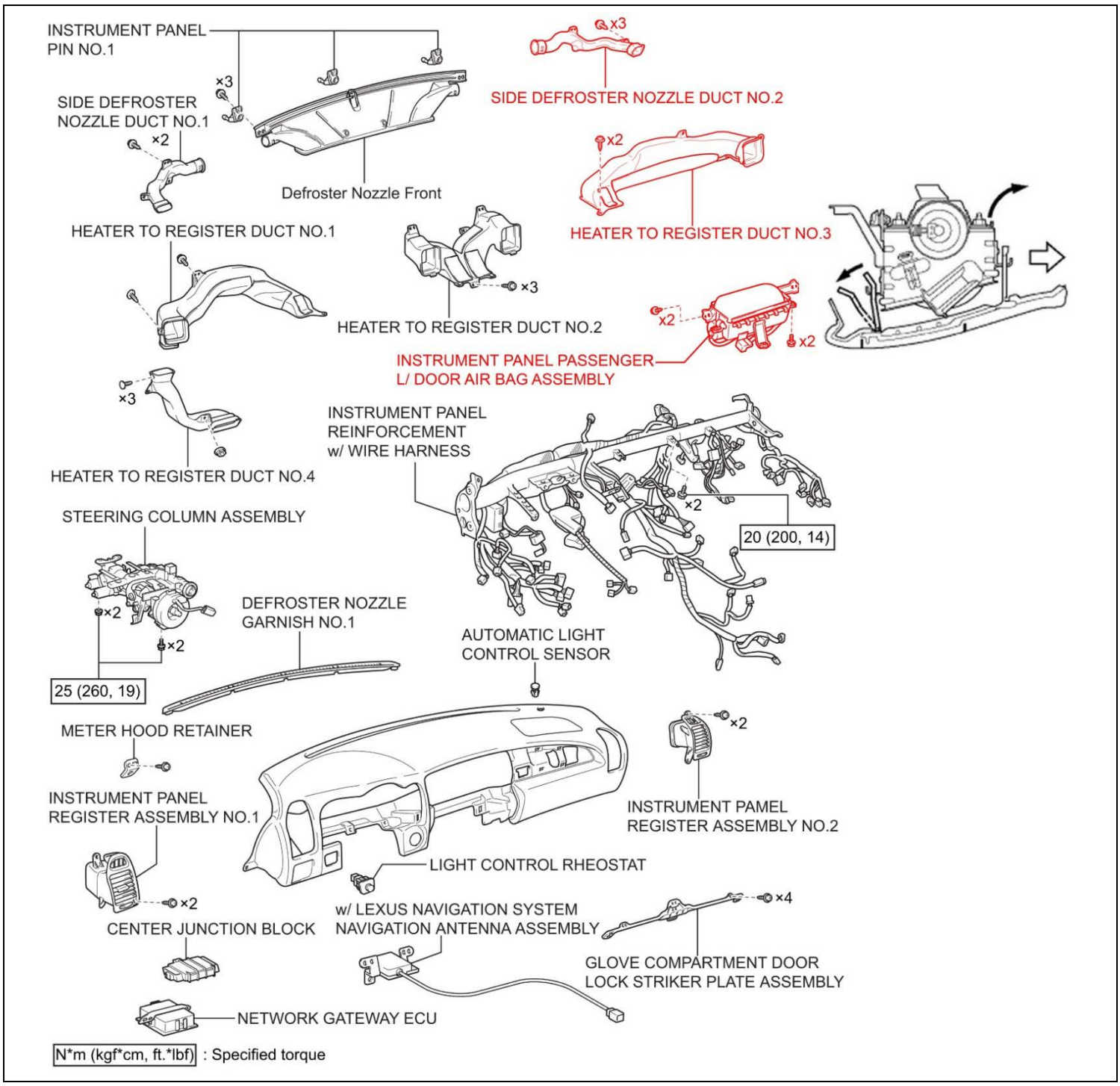

IX. AIRBAG ASSEMBLY RECORDING

1. LAUNCH THE SERIAL NUMBER RECORDING APPLICATION

Video Supplement: Serial Number Recording

Note: The Serial Number Recording Application for ELG is the same application used for DSC.

STOP

- **The AIRBAG ASSEMBLY, ORIGINAL INFLATOR, and NEW INFLATOR serial numbers MUST be recorded using the barcode scanner (provided at the launch of SSC DLC).**
- **The barcode scanner application *MUST* be completed on every vehicle. These numbers *MUST* be included on every warranty claim that is submitted for inflator module replacement or the claim may be subject to debit.**
- **The technician performing the work MUST have valid TIS login credentials and an internet connection to perform the inspection and scanning process.**

a) Log in to TIS and input the VIN of the vehicle in the Vehicle Inquiry tab.

b) Confirm the VIN is applicable and that the campaign has not been completed.

c) Click on the link to launch the serial number recording application.

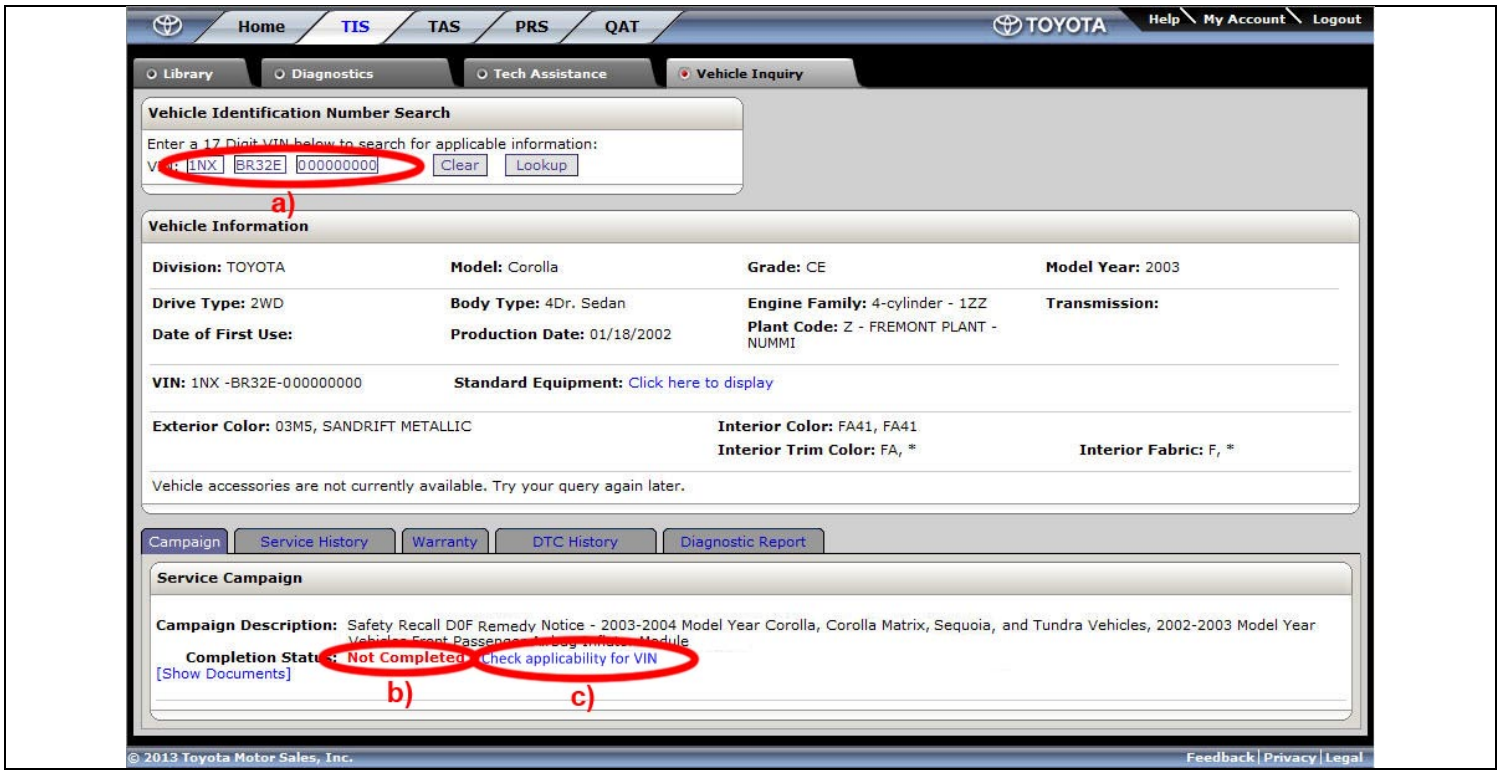

d) Reenter TIS password in the serial number recording application.

NOTE: The person logged-in to TIS *MUST* be the person performing the repair.

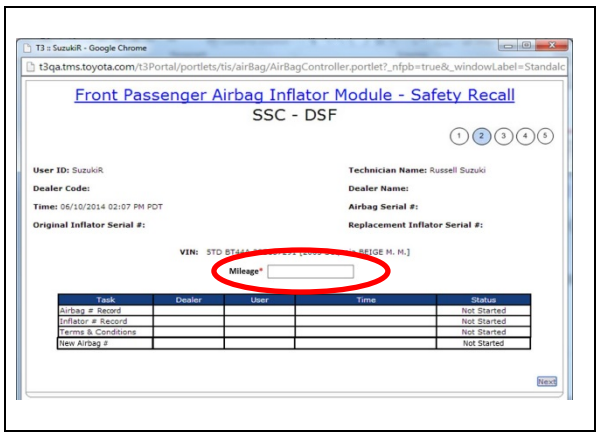

e) Record the vehicle mileage into the serial number recording application.

NOTE:

- **A task status screen will populate next and at other intervals during the repair. This screen will indicate if the inflator was replaced or in some limited cases that the entire airbag assembly was replaced. Click 'next' to proceed to the next step. This information will be used for record keeping by TMS.**

- **If this screen indicates that the campaign has already been completed on this VIN, there is no need to perform the campaign again.**

2. **CONNECT THE BARCODE SCANNER**
   a) Connect the barcode scanner to the USB port on the Techstream.
   b) The scanner will automatically connect and a beep will be heard when the scanner is ready.

   NOTE:
   - **The scanner was provided for SSC DLC.**
   - **The barcode scanner works best in low light conditions.**
   - **Always hold the scanner directly in front of and parallel to the barcode label.**
3. **SCAN THE AIRBAG SERIAL NUMBER**

ATTENTION: This information is *CRITICAL*

a) Scan the ***AIRBAG ASSEMBLY*** serial number 2 times.
   1) Confirm the cursor is in the first serial number box then scan the serial.
   2) Position the cursor in the second serial number box then scan the serial.

b) Click next.

NOTE:
- **If both serial numbers that are entered do not match, confirm and reenter.**
- **If the serial number barcode will not scan, it can be entered manually.**

AIRBAG SERIAL NUMBER IDENTIFICATION

- **The airbag serial number is *ALWAYS* the 12 *DIGITS* located between the asterisks.**
- **The 3 digits before the asterisk *ARE NOT* part of the serial number, and *SHOULD NOT* be entered or an inaccurate response may be returned.**

Airbag Serial Number Label Example

The *AIRBAG ASSEMBLY* serial number and the *INFLATOR* serial number are *DIFFERENT*. The *AIRBAG ASSEMBLY* serial number *MUST* be recorded prior to replacement.

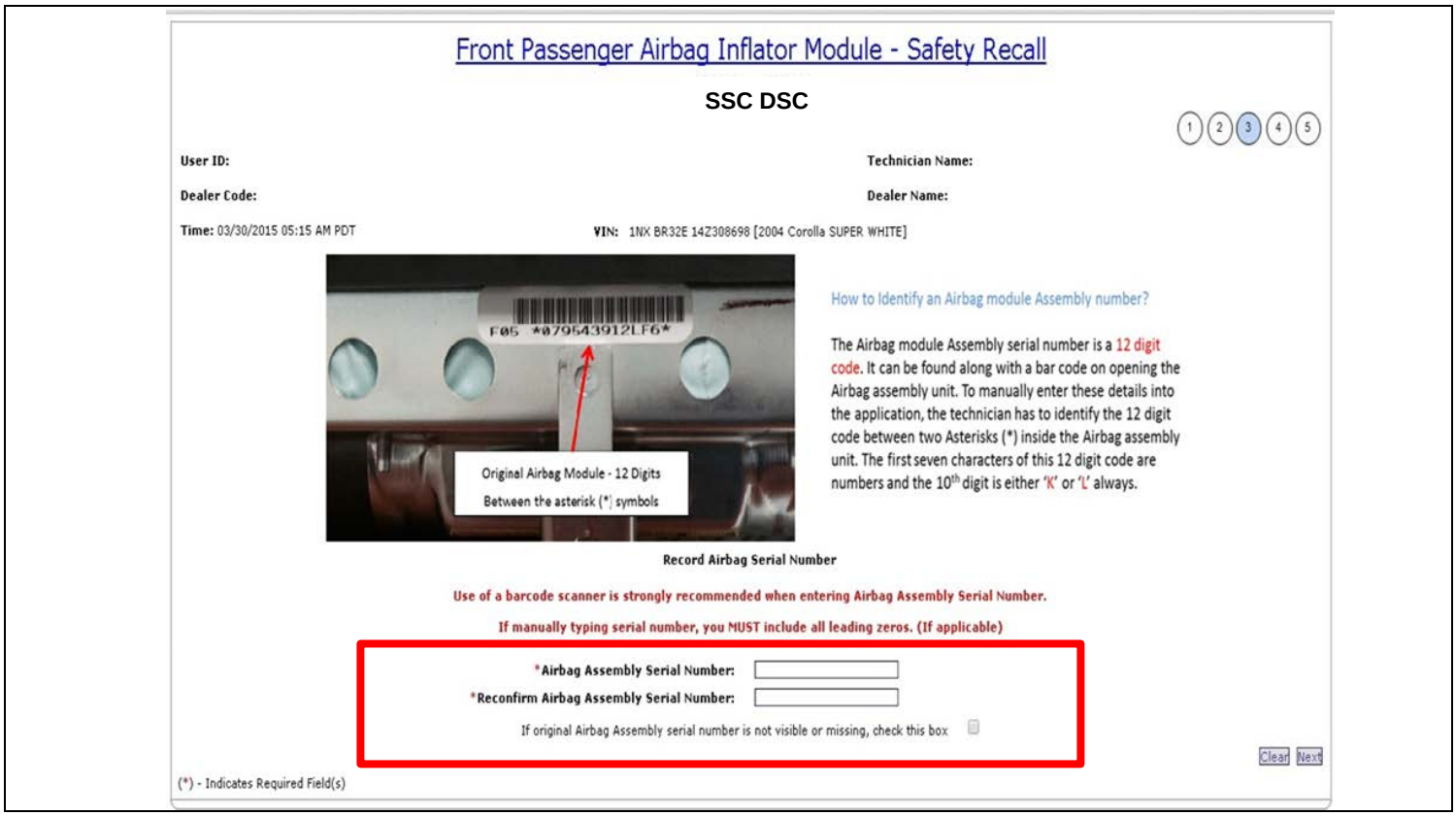

AIRBAG SERIAL NUMBER IS MISSING OR IS UNREADABLE

If the airbag serial number and barcode are not legible or are not present, check the box in the application indicating the serial number is not legible and contact your regional representative.

a) If the airbag serial number cannot be scanned or is not present check the box as shown below.

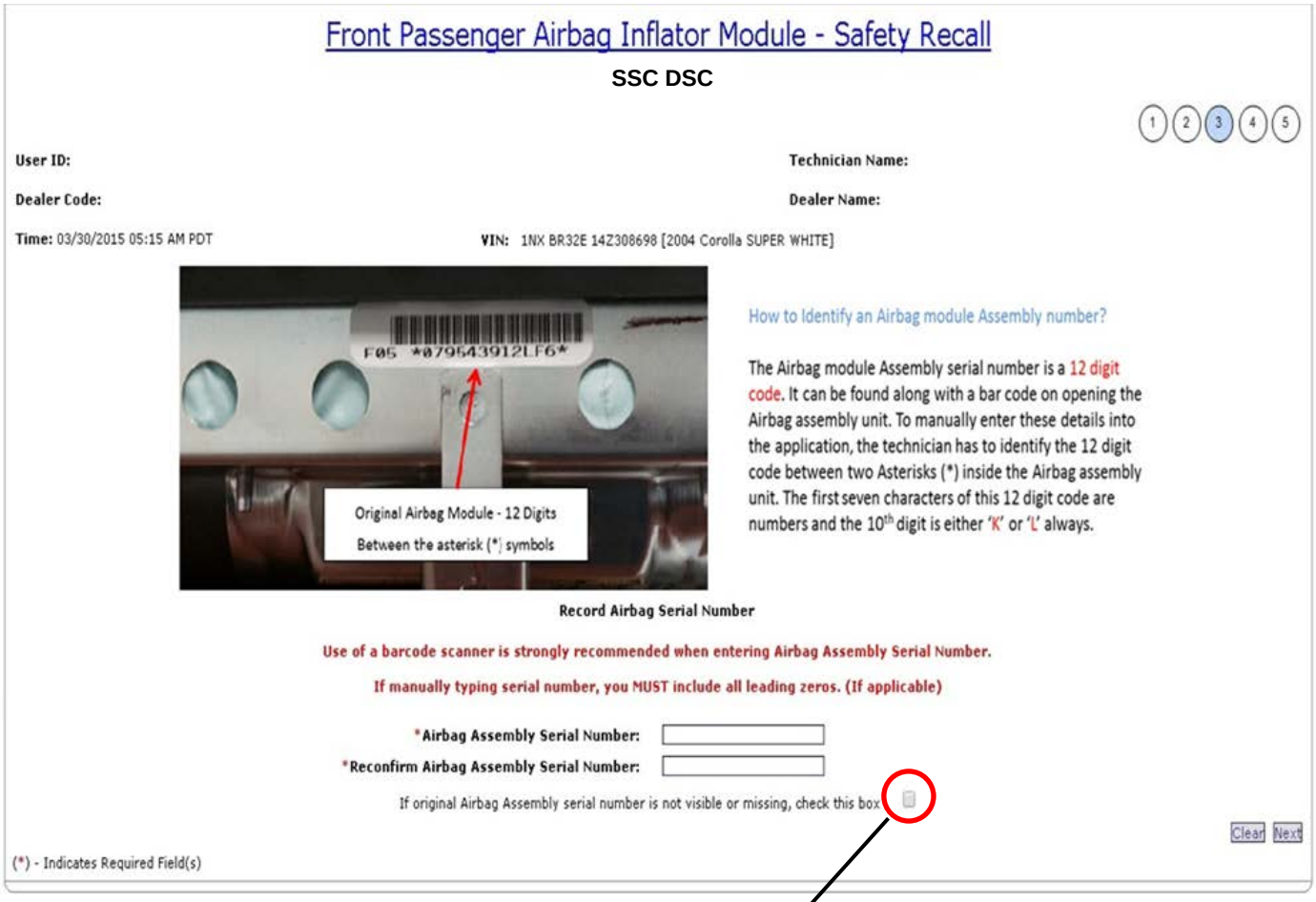

Checking this box requires Airbag Assembly replacement.
****Note** Contact your region in the event that you are unable to read the serial number.**
DO NOT ATTEMPT TO INSTALL INFLATOR

b) After the Region approves the Airbag Assembly replacement and the new part is received, scan the NEW airbag barcode in the Serial Number Recording Application.

Front Passenger Airbag Inflator Module - Safety Recall

SSC DSC

1 2 3 4 5

User ID: **Technician Name:**

Dealer Code: **Dealer Name:**

Time: 03/30/2015 05:15 AM PDT **VIN:** 1NX BR32E 14Z308698 [2004 Corolla SUPER WHITE]

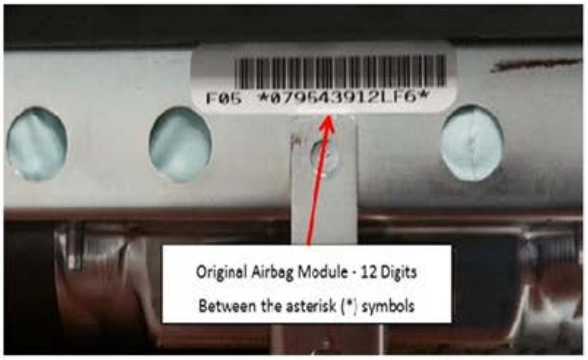

How to Identify an Airbag module Assembly number?

The Airbag module Assembly serial number is a 12 digit code. It can be found along with a bar code on opening the Airbag assembly unit. To manually enter these details into the application, the technician has to identify the 12 digit code between two Asterisks (*) inside the Airbag assembly unit. The first seven characters of this 12 digit code are numbers and the 10th digit is either 'K' or 'L' always.

Record Airbag Serial Number

Use of a barcode scanner is strongly recommended when entering Airbag Assembly Serial Number.

If manually typing serial number, you MUST include all leading zeros. (If applicable)

***New Airbag Assembly Serial Number:**

☐ * I agree to complete the safety recall's remaining technical instructions.

☐ * I agree to perform a vehicle Health Check with Techstream upon completion of the safety recall's technical instructions.

(*) - Indicates Required Field(s)

Next

STOP

The new *AIRBAG ASSEMBLY* serial number *MUST* be recorded prior to reinstallation to track the airbag assembly to the vehicle.

X. INFLATOR REPLACEMENT

Video Supplement: Inflator Replacement

CRITICAL INFORMATION – READ THOROUGHLY

The connector of the inflator module contains a short circuiting mechanism to eliminate voltage variances when the connector (1) is disconnected. To allow for the replacement of the inflator module, a new short circuit (2) *MUST* be created before cutting the wires (3) and removing the inflator. The following steps *MUST* be followed exactly as described to ensure the work is completed correctly and safely.

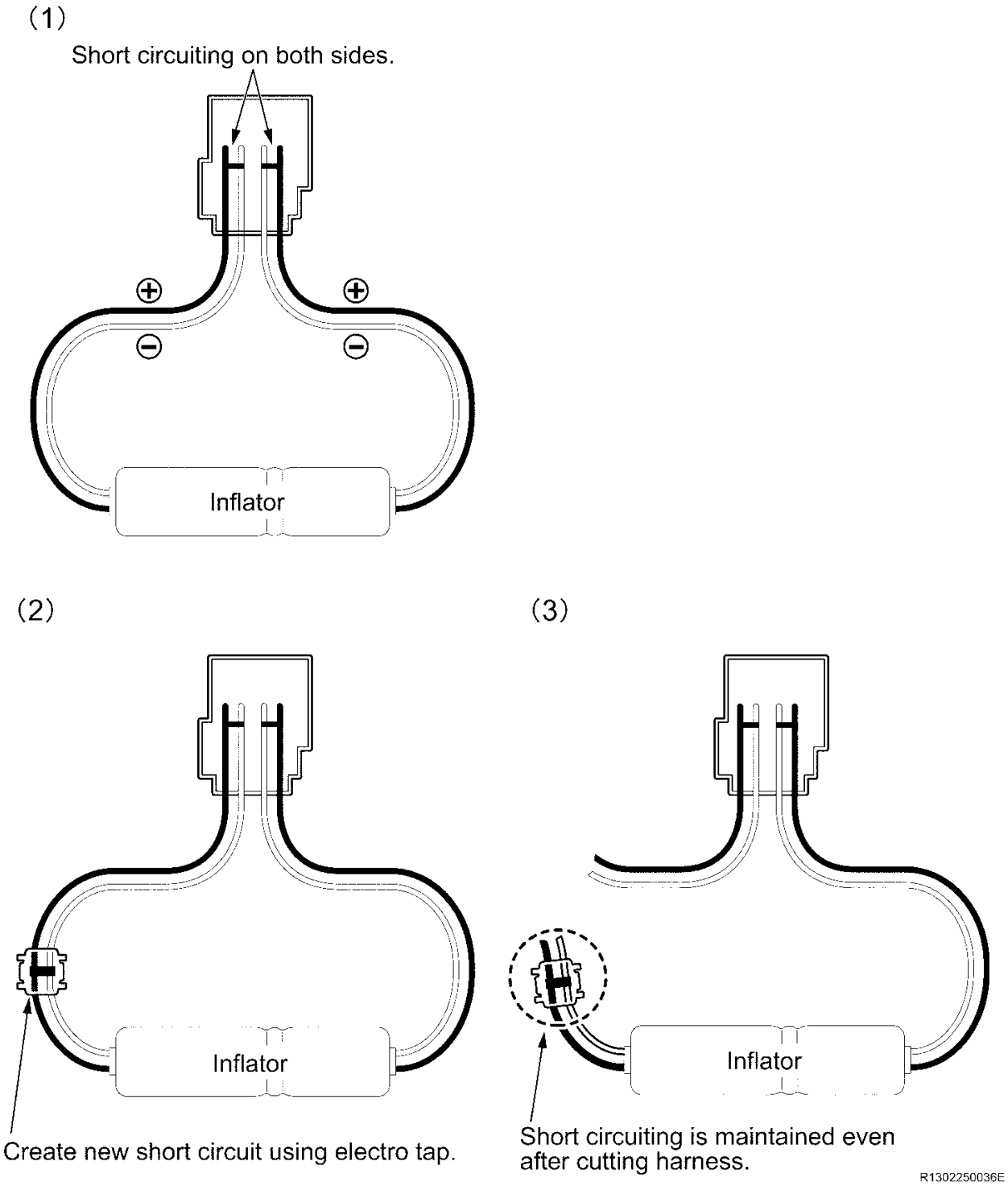

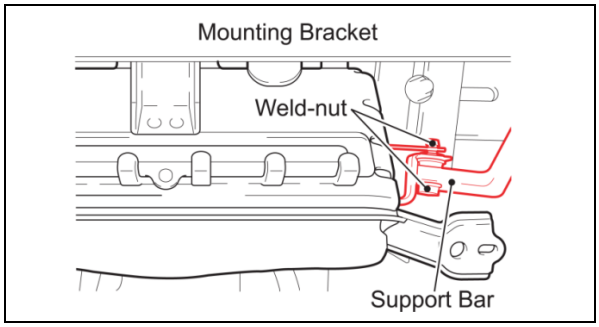

1. MOUNT THE AIRBAG IN THE MOUNTING BRACKET

a) Position the airbag so that the airbag weld-nuts are between the support bars and mounting bracket and install the bolts.

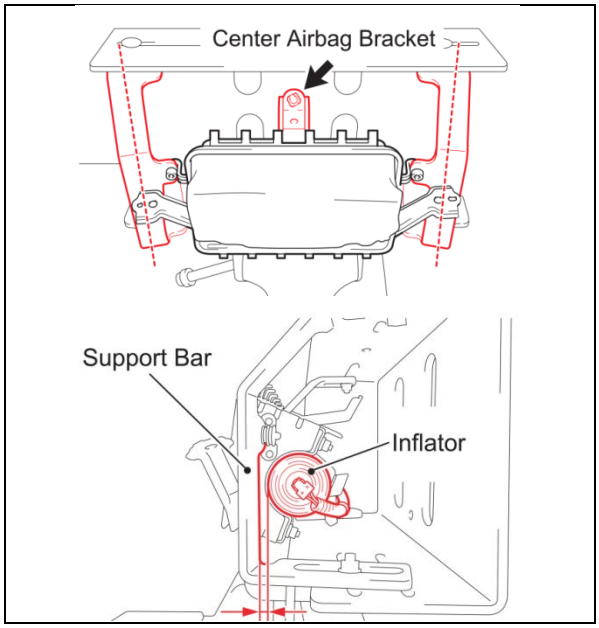

b) Position the support bars at an angle as shown in the illustration.

c) Confirm the center airbag bracket is facing up.

NOTE: The position of the support bars is critical to create clearance for the removal of the inflator.

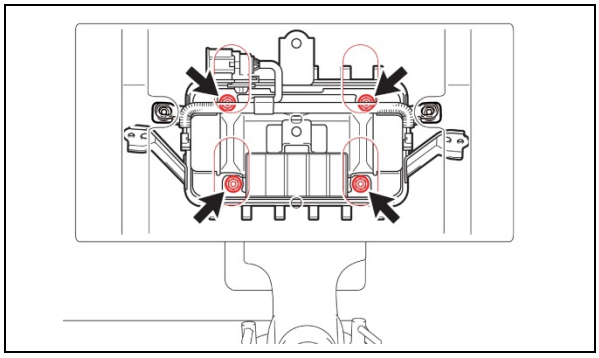

d) Position the airbag so that all four nuts can be removed through the access holes.

e) Tighten the nuts holding the support bars to the mounting bracket.

f) Confirm the following:
- Mounting bracket is secure in the vise.
- Airbag is secure in the support bars.
- Support bars are secure on the mounting bracket using 1 bolt/nut at the top of each support bar and 2 nuts/bolts at the bottom of each support bar.

CRITICAL INFORMATION – READ THOROUGHLY

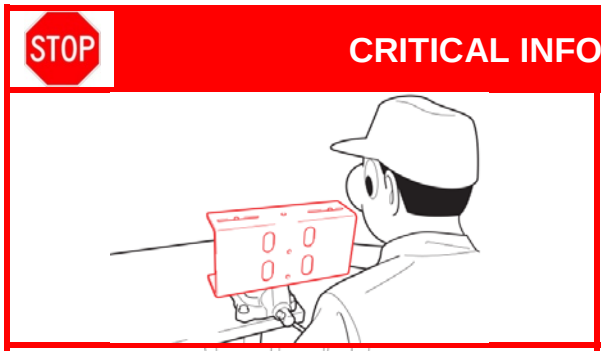

***ALWAYS* keep as much of your body as possible in front of the bracket when working on the airbag assembly.**

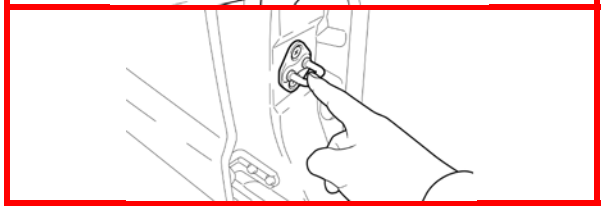

Remember to periodically touch a metallic part of the vehicle to discharge static electricity in the body.

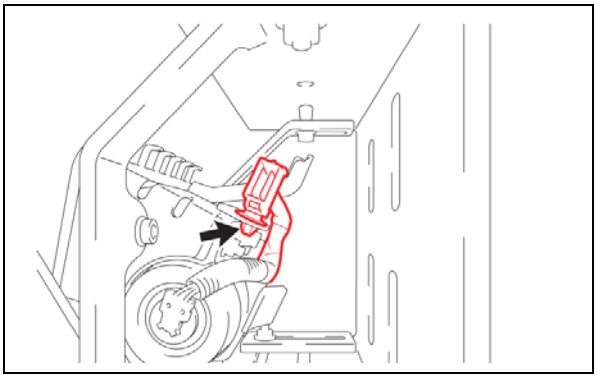

2. PREPARE TO INSTALL THE SHORT CIRCUIT

a) Disengage the harness clamp.

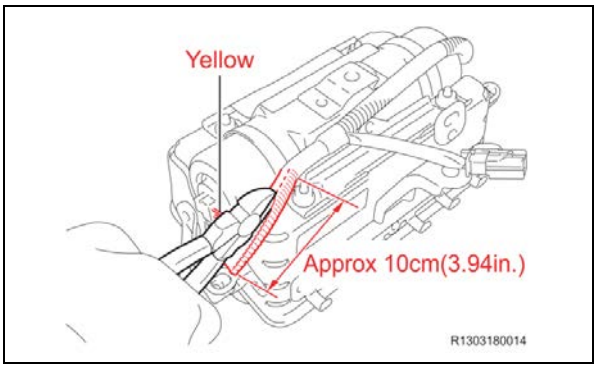

b) Cut the yellow corrugated tube on the harness approximately 4 inches (10 cm) using nippers.

> STOP
> - ***DO NOT* damage the wires in the tube.**
> - ***DO NOT* use a knife or razor blade to cut the tube to avoid damaging the wires.**
> - **This may be performed on either end of the inflator.**

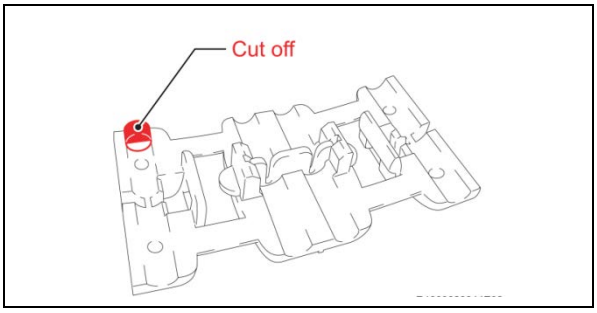

c) Cut off the tab of the electro tap shown in the illustration.

NOTE: The electro tap is included in the inflator parts kit.

> STOP **This tab *MUST* be removed to ensure a good short.**

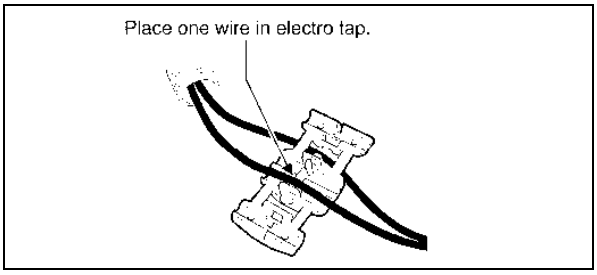

3. CREATE A NEW SHORT CIRCUIT IN THE INFLATOR HARNESS

a) Place one wire in the electro tap as shown in the illustration.

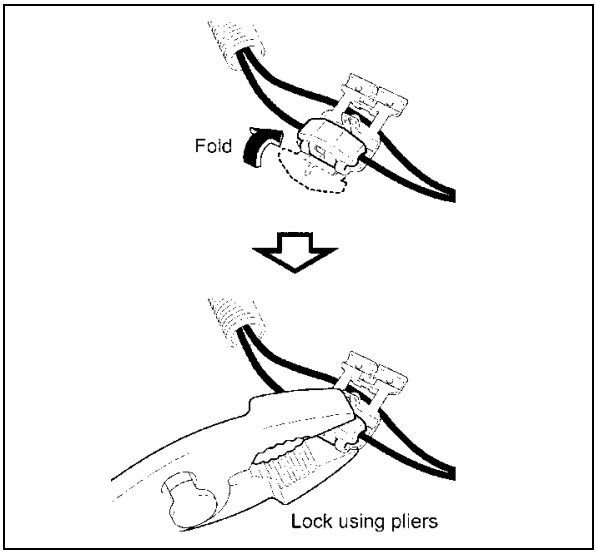

b) Fold and pinch the half of the electro tap with the wire and use pliers to lock the electro tap.

NOTE:

- ***DO NOT* work on both wires at the same time to avoid errors.**
- **Pliers *MUST* be used to confirm the electro tap is firmly locked in place.**

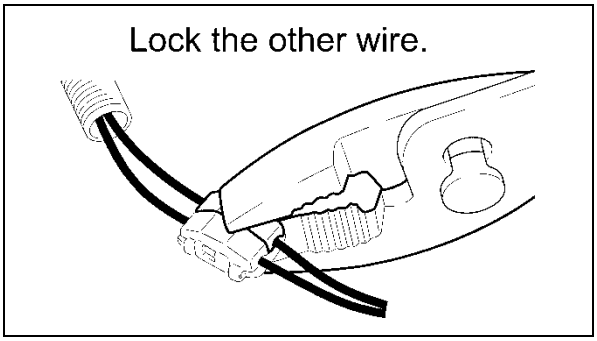

c) Set the other wire in the electro tap and lock it in place using pliers.

STOP ***DO NOT* measure resistance of the inflator wires, this may cause accidental activation.**

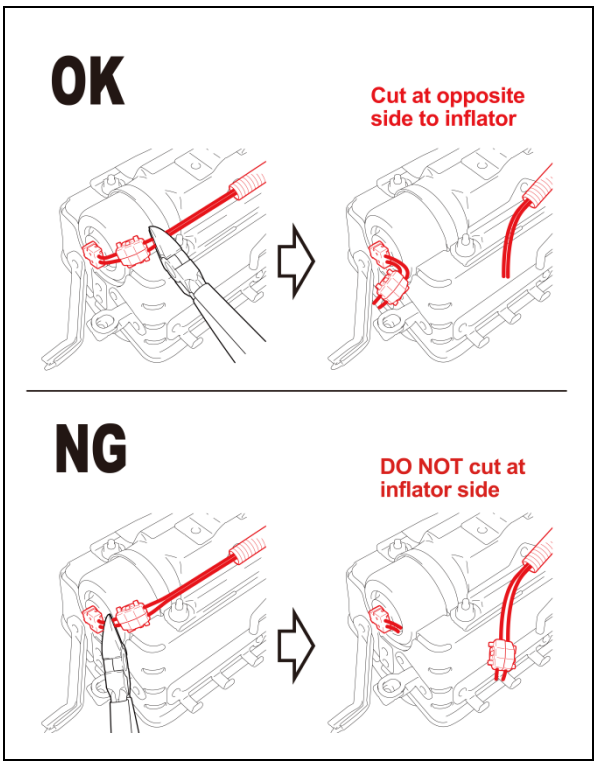

4. CUT THE INFLATOR WIRES

a) Cut the 2 wires at the side of the electro tap that is farthest away from the inflator.

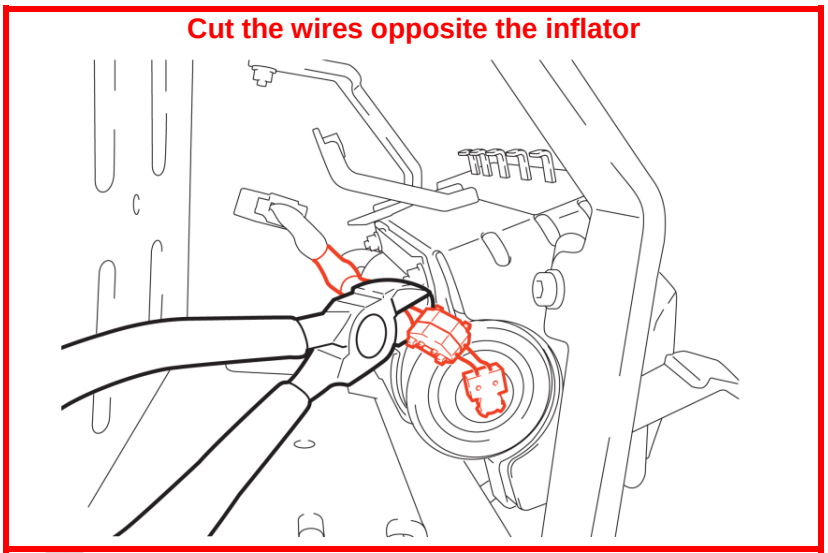

STOP ***DO NOT* measure resistance of the inflator wires, this may cause accidental activation.**

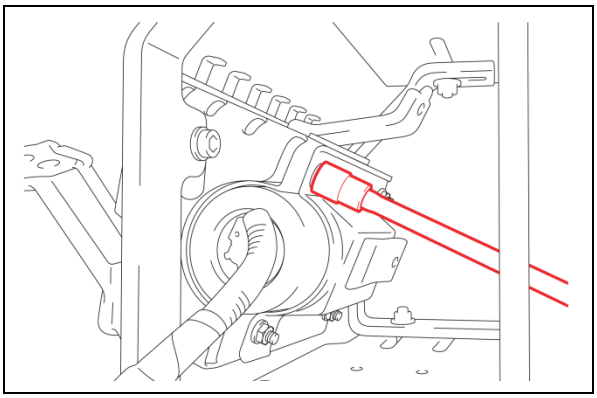

5. LOOSEN THE SELF LOCKING NUTS

a) Use the access holes in the bracket to loosen the 4 nuts.

NOTE:

- ***DO NOT* use power tools.**
- ***DO NOT* remove the nuts or the bag may fall out of the airbag assembly.**

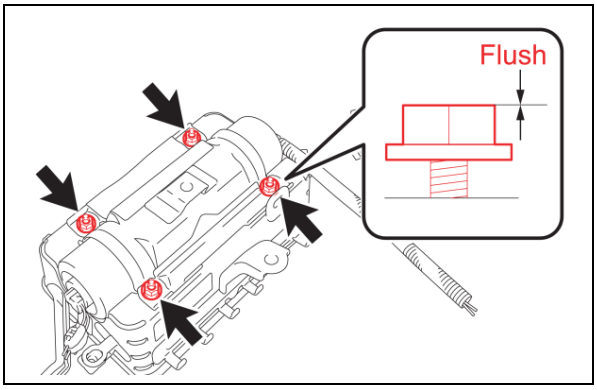

b) Loosen the nuts until they are flush with the studs.

c) Use a marker to mark the nuts as they are not to be reused.

NOTE: *DO NOT* reuse the old nuts, new nuts *MUST* be used.

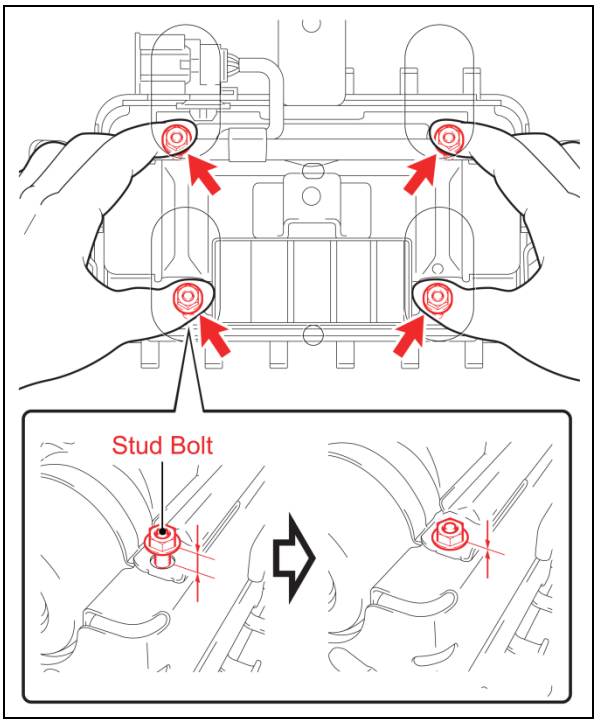

6. REMOVE THE INFLATOR

a) Gently push in the 4 studs until the nuts contact the airbag case to allow for inflator removal.

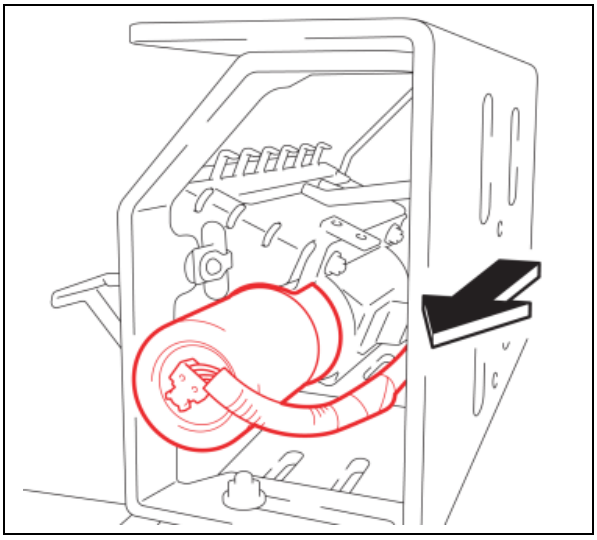

b) Remove the inflator from the airbag assembly and place it on a safe work surface.

ENSURE YOU ENTER BOTH THE OLD AND NEW INFLATOR SERIAL NUMBER IN THE APPROPRIATE SPOT OF THE APPLICATION
-DO NOT ENTER THE AIRBAG SERIAL NUMBER FOR THIS STEP-

7. SCAN THE OLD AND NEW INFLATOR SERIAL NUMBER

a) Scan the ***OLD*** inflator serial number and mark the old inflator so that it will not be reused.

b) Scan the ***NEW*** inflator serial number.

ATTENTION: This information is *CRITICAL*

- **It is used to confirm the correct inflator is removed from the vehicle.**
- **It is recorded by TMS to trace the return parts shipment.**
- **It is used to track the new inflator that is being installed in the vehicle.**

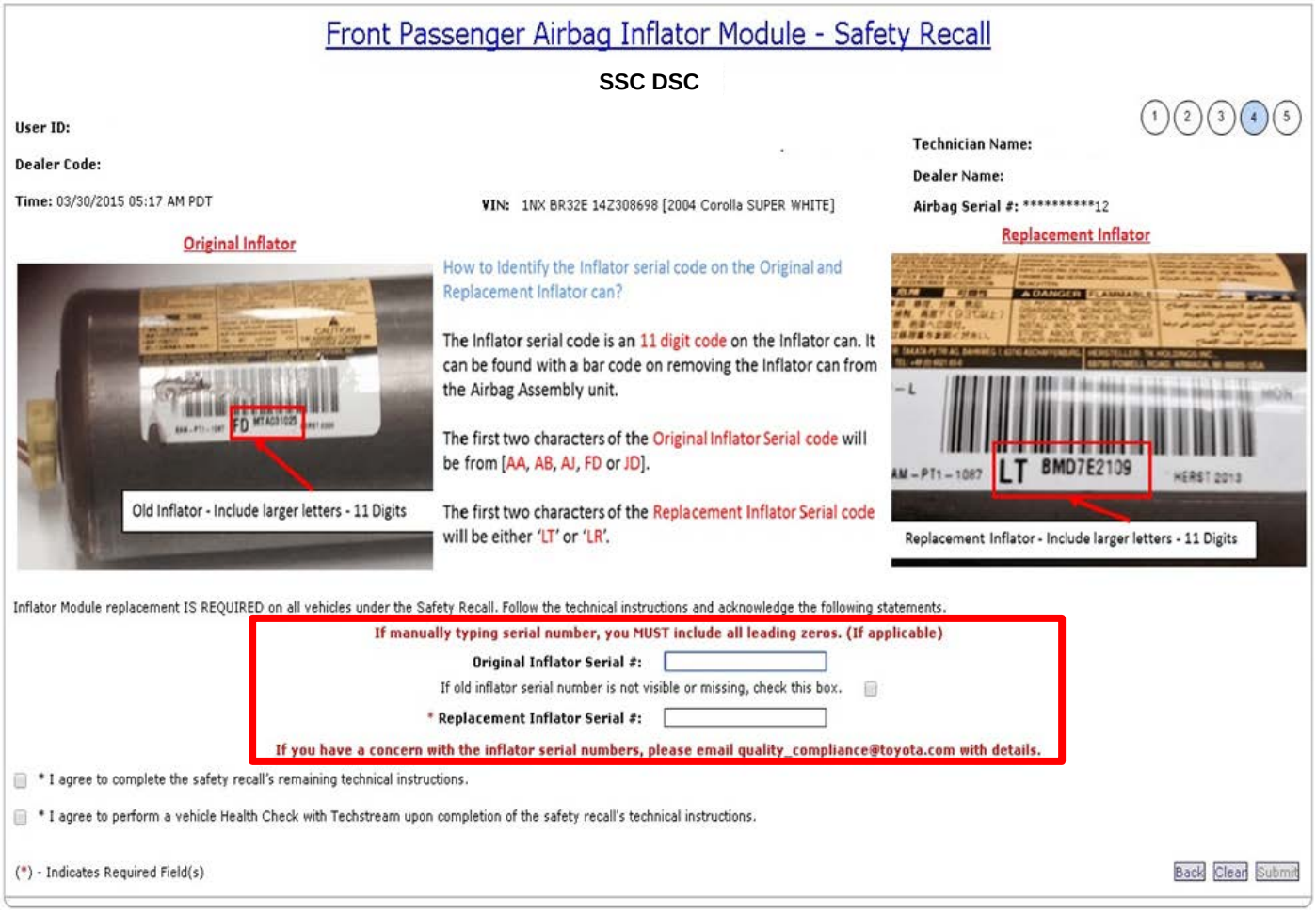

c) If the inflator serial number cannot be scanned or is not present check the box as shown below.

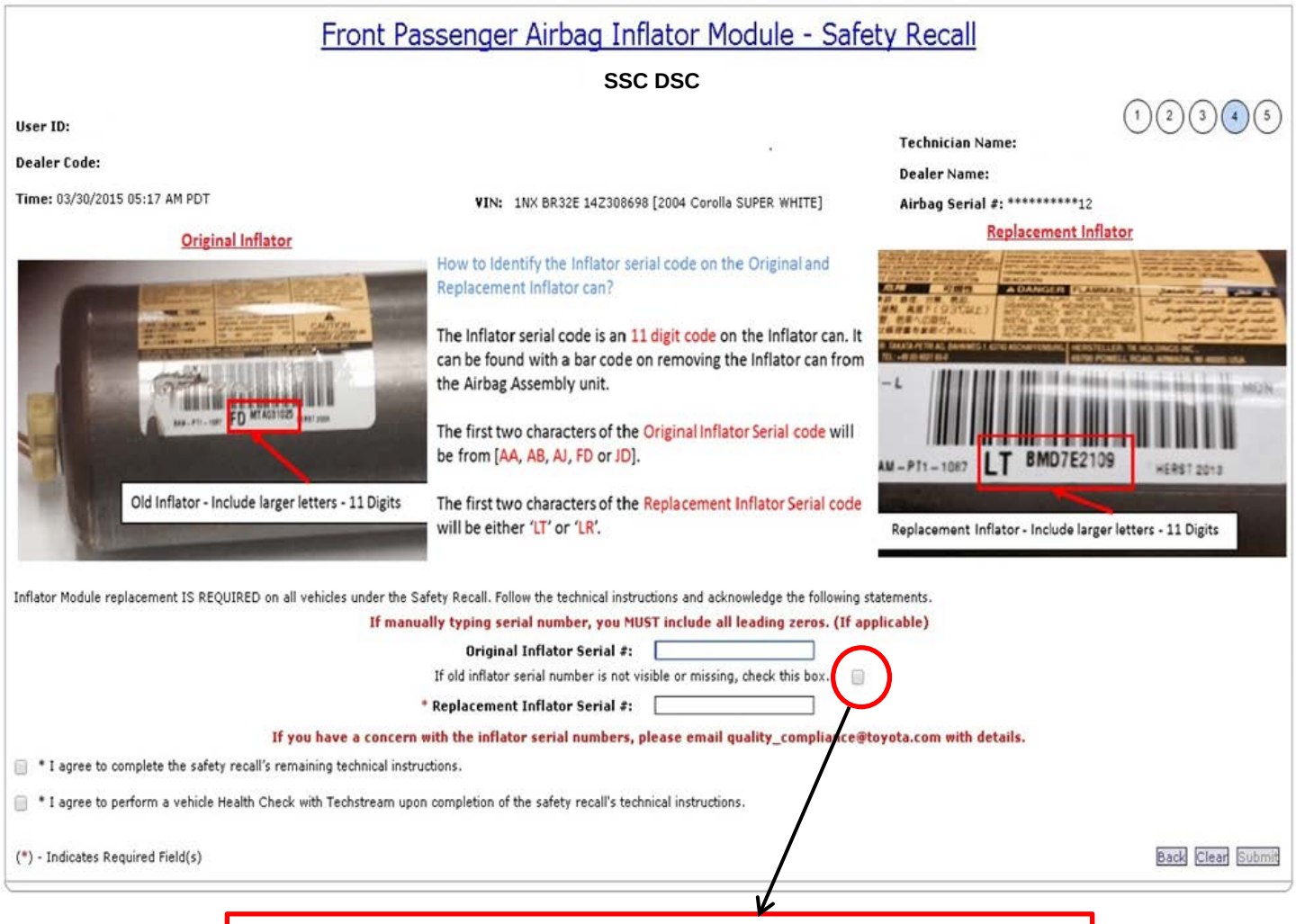

Checking this box requires Airbag Assembly replacement.
****Note** Contact your region in the event that you are unable to read the serial number.**
DO NOT ATTEMPT TO INSTALL INFLATOR

NOTE: The NEW *AIRBAG ASSEMBLY* serial number *MUST* be scanned prior to reinstallation to track the airbag assembly to the vehicle (refer to page 14).

d) Confirm agreement by checking the two boxes.

e) Record the Warranty Authorization # to be included in the warranty claim.

f) Place the old inflator in the parts box and take it immediately to the parts department.

NOTE:

- **Keep all shipping paperwork with the box that it came in.**
- **Confirm the cursor is in the correct serial number input box before scanning.**
- **If the serial number barcode will not scan, it can be entered manually.**
- **If there are any difficulties or concerns with this process, email quality_compliance@toyota.com with details.**

Step c)

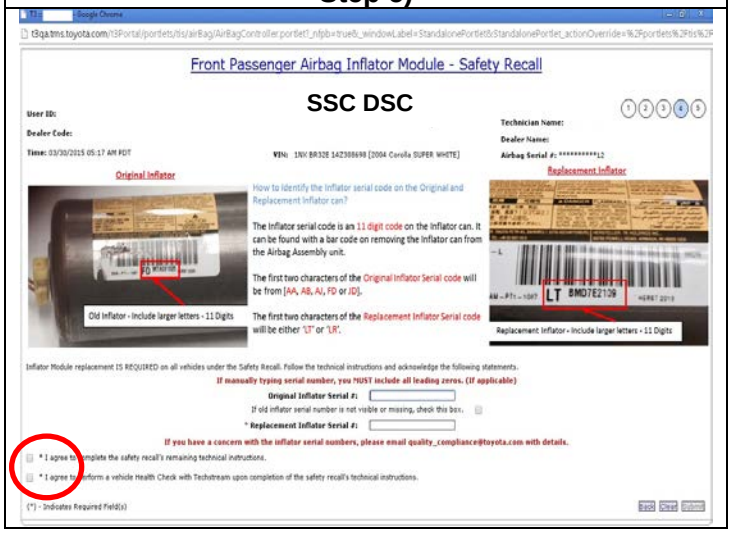

Step d)

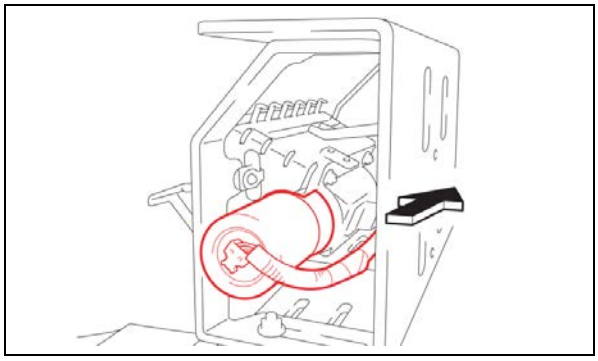

8. INSTALL THE *NEW* INFLATOR

a) Carefully slide the new inflator into the airbag assembly.

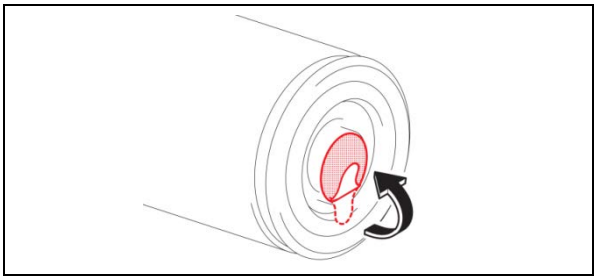

9. FOLD THE CONNECTOR SEAL

a) Fold the seal in order to prevent it from being caught under the position determining plate in the next step.

NOTE: *DO NOT* fully remove the seal until just before connecting the harness.

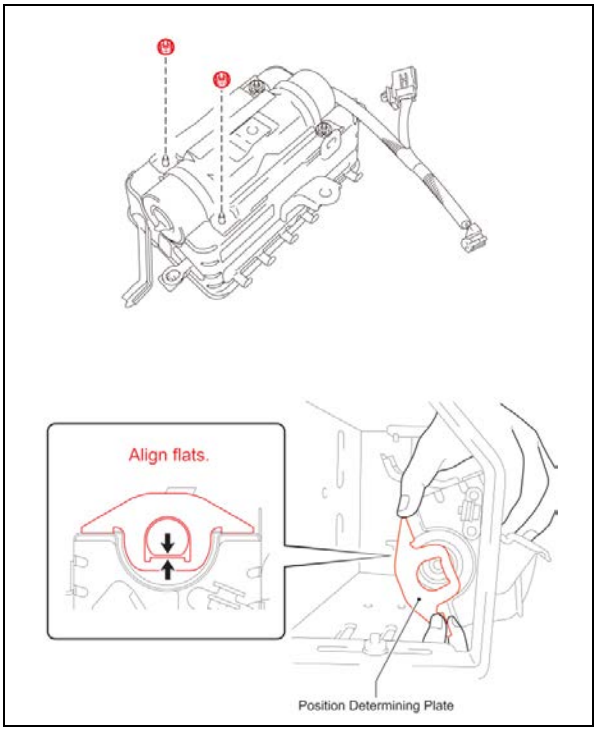

10. INSTALL THE *NEW* SELF LOCKING NUTS AND POSITION DETERMINING PLATE

a) Remove the 2 old nuts.

b) Install the position determining plate and install the 2 ***NEW*** nuts by hand. They will be torqued on a later step.

STOP **The position determining plate can only be installed on one side in one position, confirm the plate is aligned correctly.**

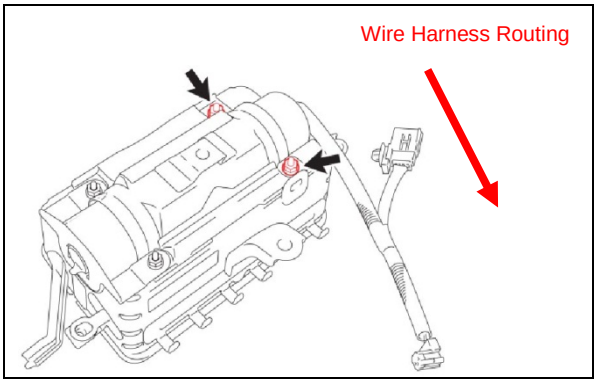

c) Remove the 2 old nuts.

d) Install the 2 ***NEW*** nuts by hand. They will be torqued on the next step.

STOP **Ensure the position of the new wire harness matches the illustration. If the wire harness is not oriented correctly, the connector will not line up with the retaining bracket. DO NOT use this inflator if the harness is not correctly routed.**

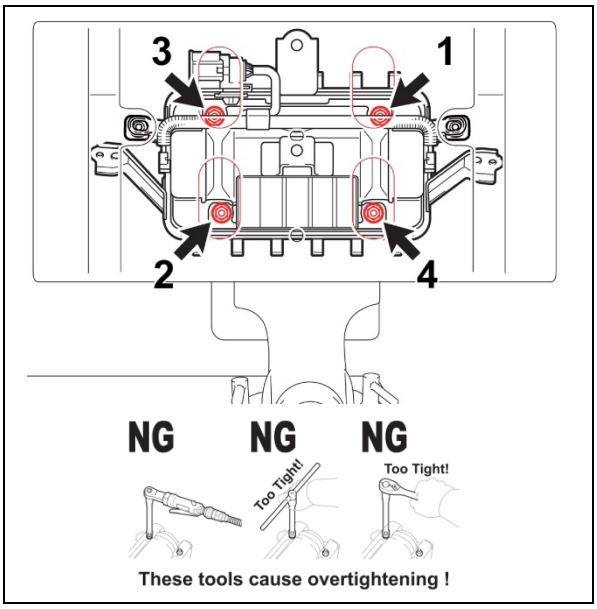

11. TORQUE THE NUTS

a) Push the inflator so that it contacts the position determining plate.

b) Tighten the nuts evenly in two increments following the sequence shown in the illustration. Use a socket driver or torque wrench to tighten the nuts.

Torque: 35in. lbf (3.9N·m)

STOP

- **If the inflator is not positioned correctly in the position determining plate the airbag may not deploy correctly when activated.**
- **There will be some resistance when tightening the nuts because they are self-locking, confirm the nuts are tightened correctly.**
- ***DO NOT* use a power tool, T-handle, or ratchet when tightening the nuts to avoid over torqueing.**

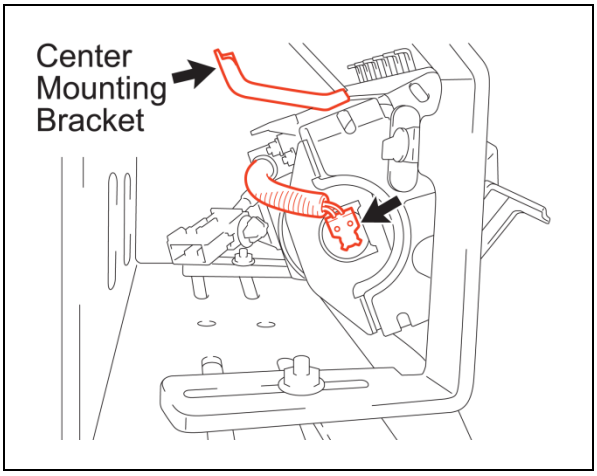

12. CONNECT THE INFLATOR CONNECTOR

a) Remove the connector seal from the inflator.

b) Confirm the alignment of the harness connector as shown in the illustration, then connect the harness. The connector wires should lead toward the center mounting bracket on the airbag assembly.

STOP

- **The connector should be connected *IMMEDIATELY* after removing the seal.**
- **The connector is one-way, once it is installed it *CANNOT* be removed.**
- **If the connector is installed in the incorrect orientation the terminals may be bent or the connector may not fully engage.**

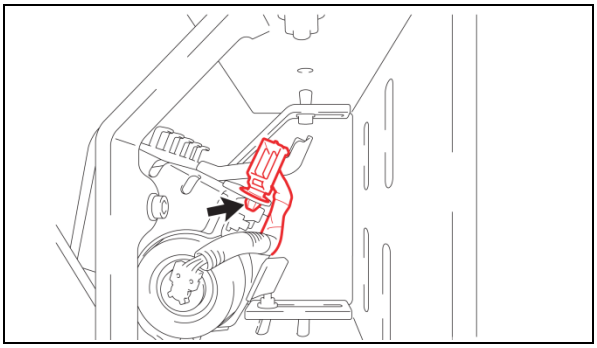

13. CONNECT THE HARNESS CLAMP

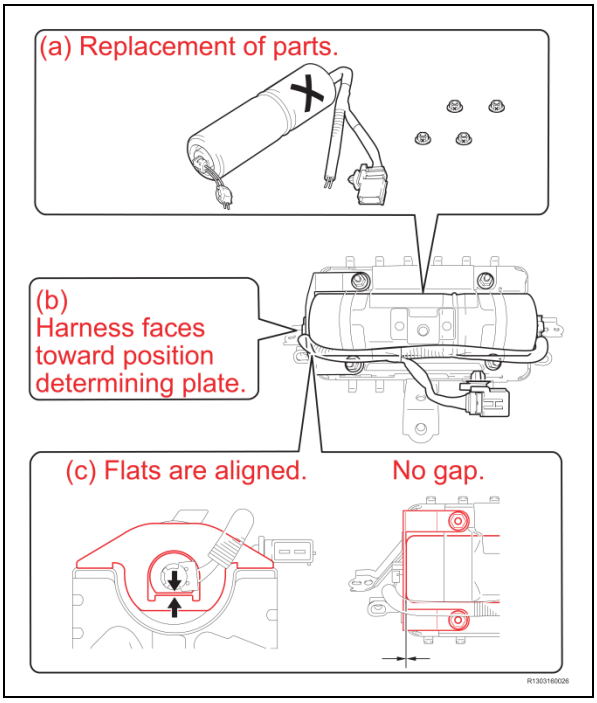

14. INSPECT THE AIRBAG BEFORE INSTALLATION

a) Confirm that the 4 ***NEW*** nuts are installed and tight.

b) Confirm the ***NEW*** position determining plate is installed.

c) Confirm the flats on the position determining plate and inflator are aligned.

STOP

If the new wire harness is not routed as shown, you will be unable to attach the connector to the support bracket. If the harness is not routed correctly DO NOT use this inflator.

XI. VEHICLE REASSEMBLY

1. REINSTALL THE AIRBAG ASSEMBLY IN THE INSTRUMENT PANEL

a) Position the airbag assembly in the instrument panel, engage the straps, and then install the 4 bolts.

b) Install the 2 screws and the heater to register duct.

c) Install the 3 screws and the side defroster nozzle.

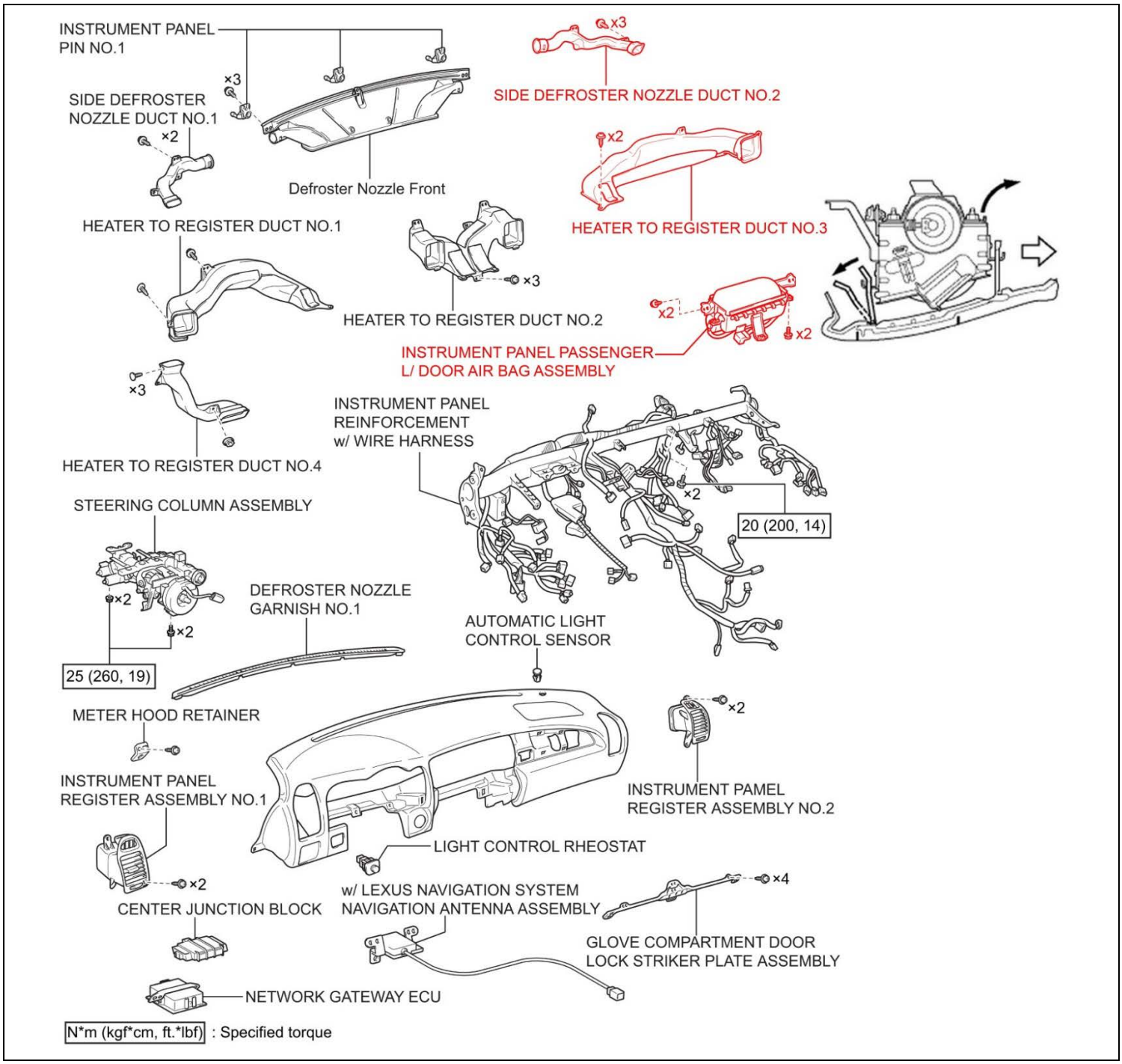

2. INSTALL THE INSTRUMENT PANEL SAFETY PAD SUB-ASSEMBLY

a) Refer to TIS for reinstallation instructions

2002-2005 MY	2006 MY	2007 MY	2008 MY	2009MY 08/2008 – 10/2008 Production	2009MY 10/2008 – 08/2009 Production	2010MY

3. **RECONNECT THE NEGATIVE BATTERY CABLE**
4. **PERFORM A HEALTH CHECK AND DIAGNOSTIC REPORT**

◄ VERIFY REPAIR QUALITY ►

- **Confirm all precautions are follow to ensure safety during the repair**
- **Confirm the entire serial number checker application is completed and the warranty authorization # is recorded on *EVERY* vehicle**
- **Confirm the old inflator is handled safely and given to the appropriate parts professional for shipment**
- **Confirm the inflator harness connector is fully engaged and that the position determining plate is installed correctly**

If you have any questions regarding this update, please contact your area representative.

XII. APPENDIX

A. CAMPAIGN DESIGNATION DECODER

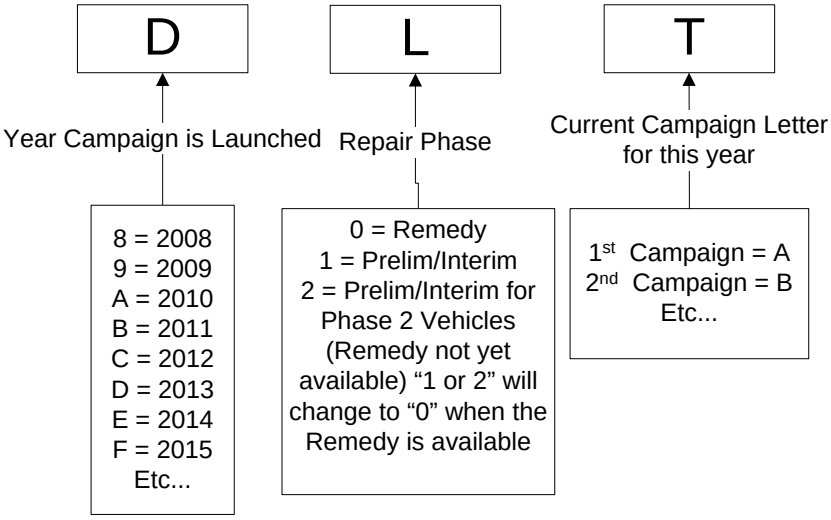

B. CAMPAIGN PARTS DISPOSAL

Video Supplement: Parts Handling

ALL inflators that are removed from vehicles under this campaign ***MUST*** be packaged and shipped back to the inflator manufacturer following the manufacturer's instructions. The instructions can be found in the following locations:

- Attached to the dealer letter
- Included in the parts box
- The laminated aid that was provided at the launch of the campaign