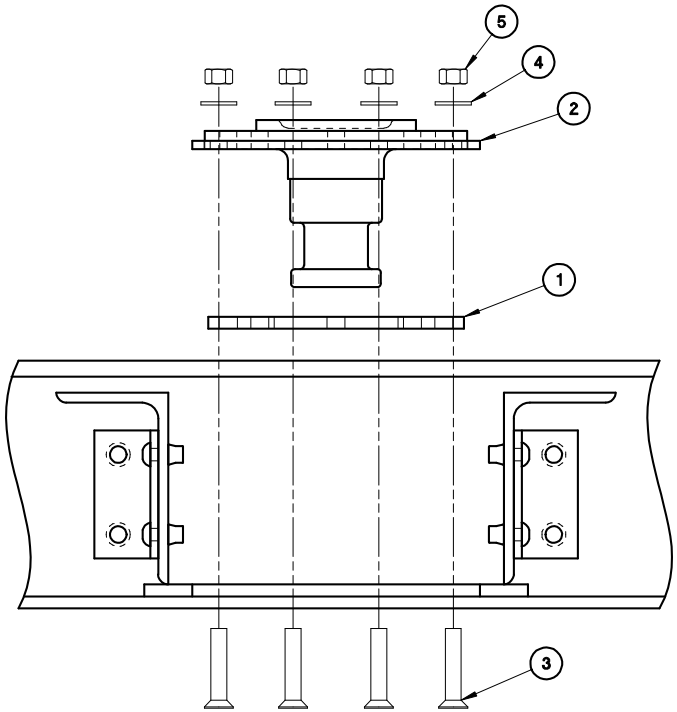

FOR WELD REPAIR REFERENCE
DRAWING GBB02968PX

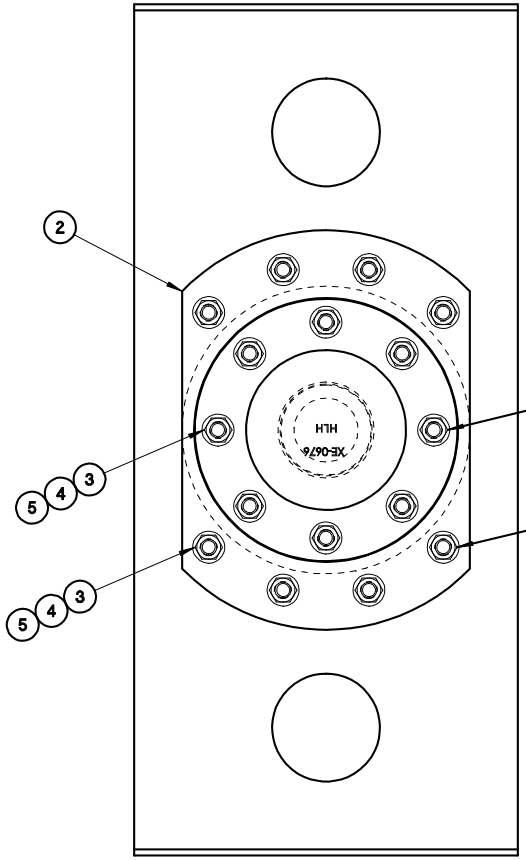

TORQUE FASTENERS TO 90-115 FT/LBS USING AN ALTERNATING PATTERN

DRILL 17/32 DIA. HOLE WITH 82° COUNTERSINK IN PICKUP PLATE.

BY	DATE	DESCRIPTION	C.O.NO.

WILSON TRAILER CO. SIOUX CITY, IOWA

DESCRIPTION
AL.KINGPIN REPAIR FOR RECESSED PIN

DRAWING BY	DATE	UOM	UOM	UOM	UOM	SRC	ASSEMBLY
PARKS	06/08/15	EA					PART NUMBER
WEIGHT	SCALE 1/4	MODEL DWH					GBB02968PW
REFERENCE XXX		NEXT ASSEMBLY XXXX					

METO DRAWING:DO NOT REVISE MANUALLY:DO NOT SCALE