Applies To: **2013 RDX** – Check the iN VIN status for eligibility **October 15, 2013**

Safety Recall: 2013 RDX Shift Interlock Stopper

(Supersedes 13-019, dated May 21, 2013, to revise the information marked by the black bars)

REVISION SUMMARY

Under REPAIR PROCEDURE, step 19, revised text in first and second bullet steps to match the video. Also added a note to first bullet step describing consequences of not following that step exactly as shown.

BACKGROUND

In sub-freezing temperatures, it is possible to move the shift lever out of P without pressing the brake pedal.

CLIENT NOTIFICATION

Owners of affected vehicles will receive a notification of this campaign.

Do an **iN VIN status inquiry** to make sure the vehicle is shown as eligible.

Some vehicles affected by this campaign may be in your new or used vehicle inventory. These vehicles **must** be repaired before they are sold.

Should your dealership sell an unrepaired vehicle that subsequently causes injury or damage because of the recalled item, the dealership will be solely responsible to the damaged party, and will be required to defend and indemnify American Honda for any resulting claims. To see if a vehicle in inventory is affected by this recall, do a VIN status inquiry before selling it.

CORRECTIVE ACTION

Replace the shift interlock stopper.

PARTS INFORMATION

Shift Interlock Stopper: P/N 06540-T0A-A81

TOOL INFORMATION

KTC Trim Tool Set: T/N SOJATP2014

Snap-On Pick Tool (or equivalent): T/N SG3ASH90B

WARRANTY CLAIM INFORMATION

Operation Number:	2151C9
Flat Rate Time:	0.6 hour
Failed Part:	P/N 43123-TX4-A81
Defect Code:	5GU00
Symptom Code:	S9800
Skill Level:	Repair Technician

REPAIR PROCEDURE

1. Make sure the parking brake is set, then remove the shift interlock lid.

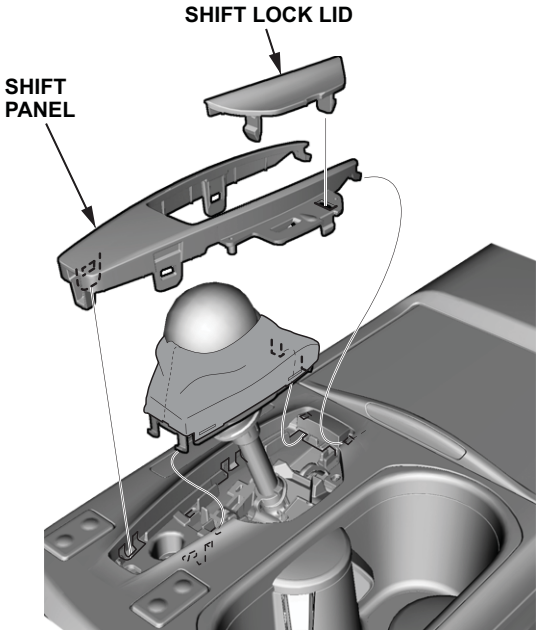

2. Press the shift interlock lever, and move the shift lever to N.
3. Remove the shift panel.
4. Roll up the shift lever boot, and disconnect the harness clip.

© 2013 American Honda Motor Co., Inc. – All Rights Reserved

Skill Level R REPAIR

CLIENT INFORMATION: The information in this bulletin is intended for use only by skilled technicians who have the proper tools, equipment, and training to correctly and safely maintain your vehicle. These procedures should not be attempted by “do-it-yourselfers,” and you should not assume this bulletin applies to your vehicle, or that your vehicle has the condition described. To determine whether this information applies, contact an authorized Acura automobile dealer.

5. Remove the center console panel.

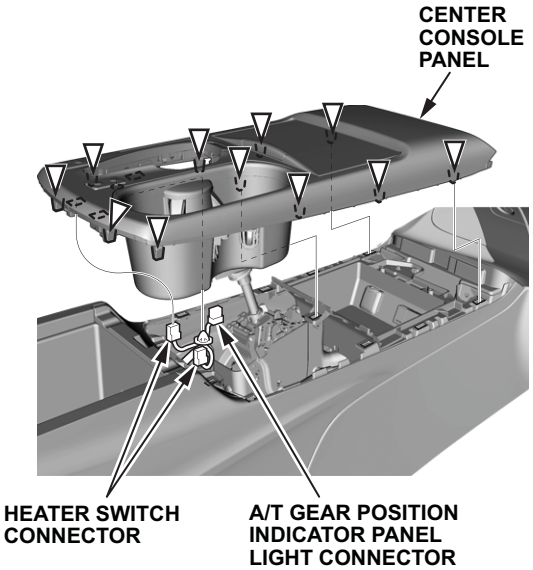

6. Disconnect the seat heater switch connectors and the A/T gear position indicator panel light connector.
7. Disconnect the harness clip from the console.

8. Remove the console pocket from the center console panel, and lay it over towards the passenger side.

   NOTE: You do not have to disconnect the connectors.

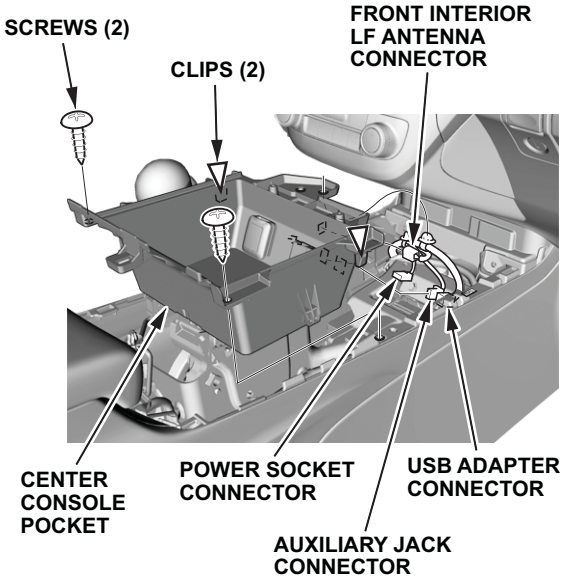

9. Slide the driver's seat all the way rearward.
10. Remove the driver's side center console side cover.

DRIVER'S SIDE:

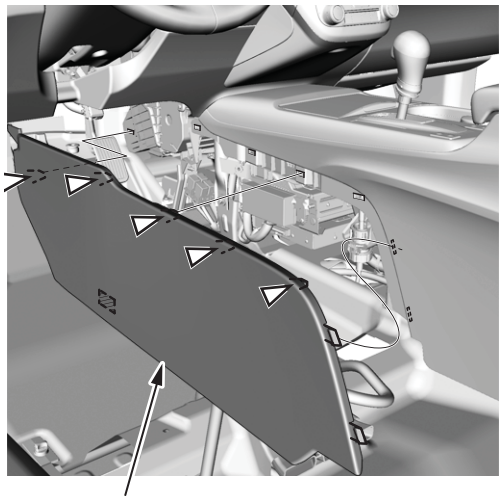

11. Insert a bolt (10 mm head 6 mm x 40 mm) into the positioning holes to lock the shift lever assembly in R.

    NOTE: You may need to pull the lower section of the center console away to give you enough space to insert the bolt into the slot.

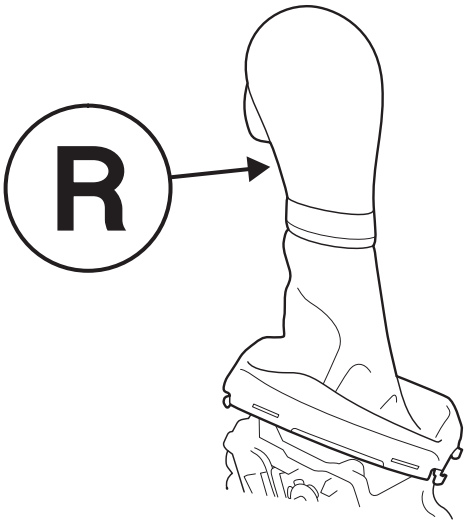

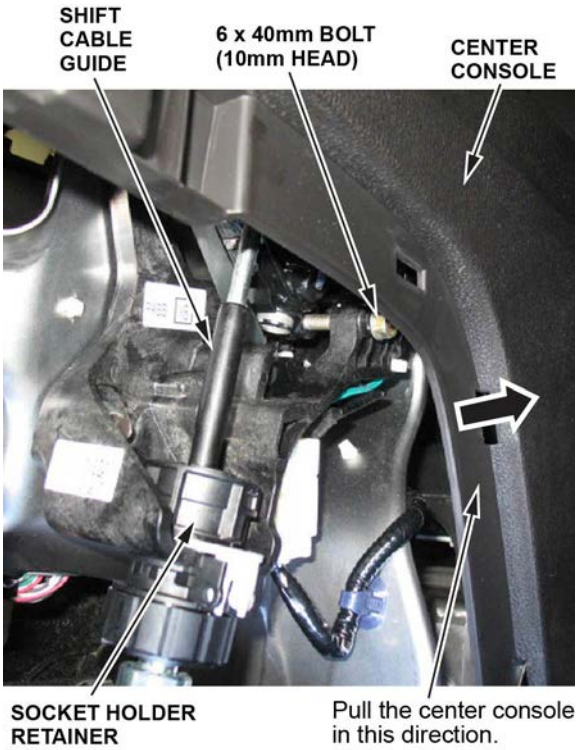

12. Remove the shift cable end nut.

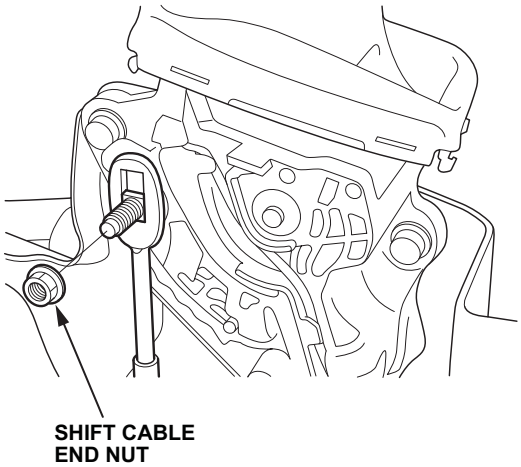

13. Remove the shift cable from the shift cable bracket. First, click on the video below to see how the step is done.

    NOTE: The dashboard brackets may have sharp edges. Wear gloves to protect your hands.

- Release the retainer lock.

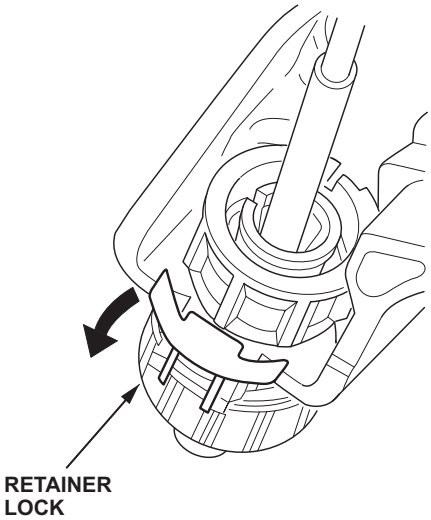

- Rotate the upper half (above the retainer lock) of the socket holder retainer counterclockwise until it stops turning.

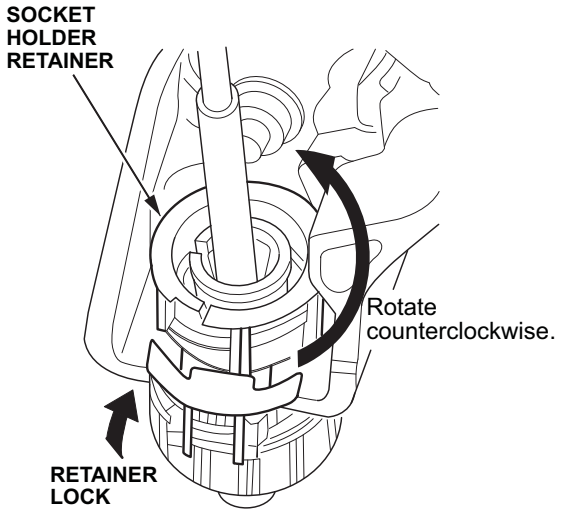

- Push the retainer lock in to lock the socket holder retainer in place.

  NOTE:
  - Make sure the retainer lock properly locks the retainer because the retainer is spring loaded and will release if let go. If it does release, reset it by rotating the upper half of the socket holder.
  - Do not rotate the lower half of the socket holder retainer (below the retainer lock), or it may break.
- Remove the shift cable by holding the socket holder retainer, and sliding it off of the shift cable bracket.

  NOTE: Do not remove the shift cable by pulling on the shift cable guide, or the guide may break. If this happens, the entire shift cable must be replaced.

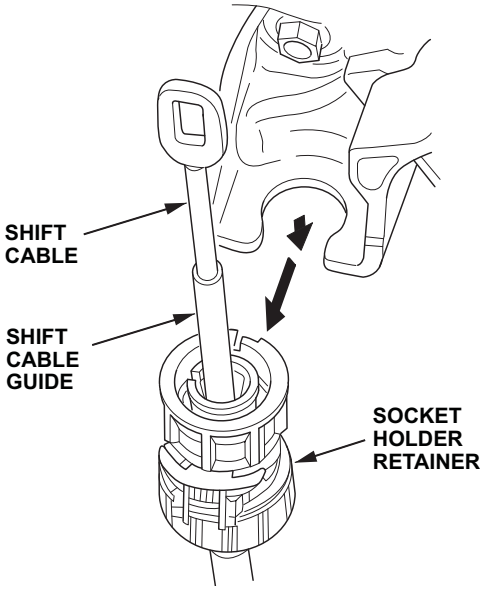

14. Remove the shift lever assembly from the instrument panel.
    - Disconnect the shift lever connector.

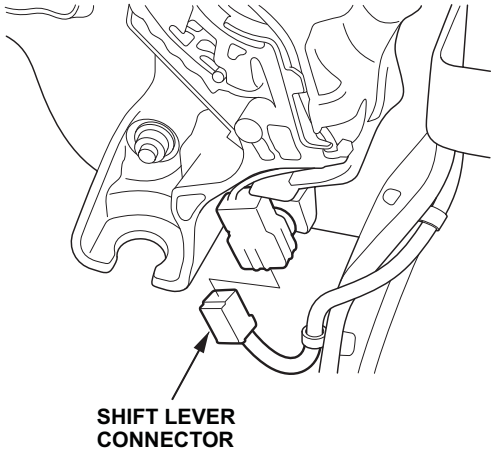

    - Remove the shift lever mounting bolts and nut.

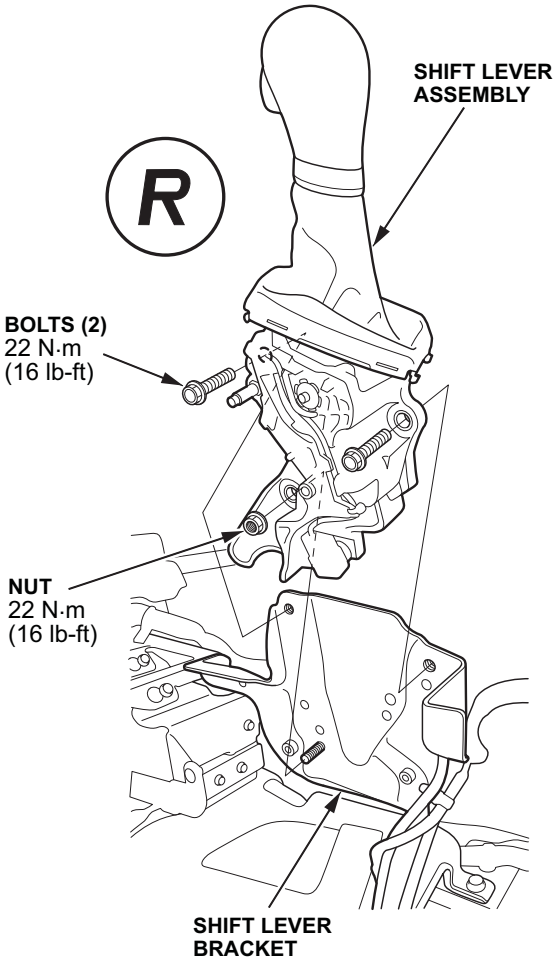

15. Remove the bolt that you inserted earlier to lock the shift lever assembly in the R position.

16. Move the shift lever to 1.

    NOTE: Lay the shift lever assembly on a clean cloth to prevent damaging it.

17. Release the shift interlock release by using a pick tool or small flat blade screwdriver (3 mm diameter) to push the tab down and in toward the shift interlock release.

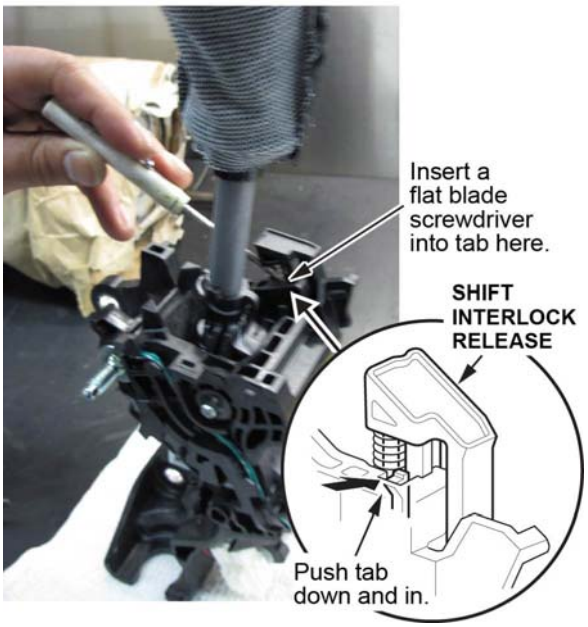

18. Lay the shift lever assembly on its side, and remove the shift interlock release and the spring.

    NOTE: Make sure you don't lose or damage the spring.

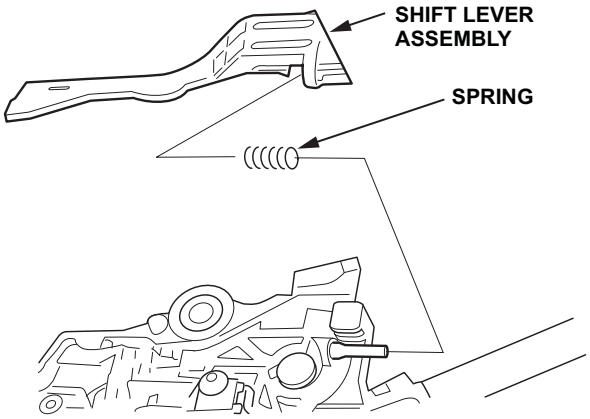

19. Remove the shift interlock solenoid. First, click on the video below to see how the step is done.

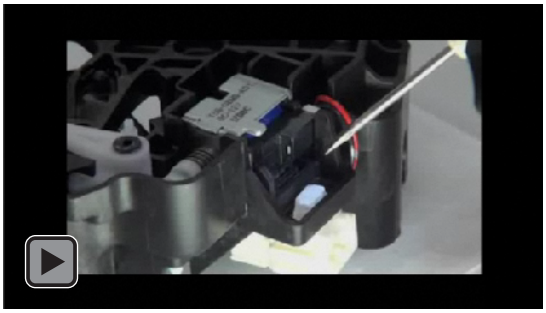

- Insert a flat-head screwdriver into the slotted tab.

  NOTE: **Make sure you insert the screwdriver in the exact specified location as shown.** If you do not, you can damage the windings when you pry out the solenoid, causing it to short out. This damage will result in the shift lever unable to come out of Park.

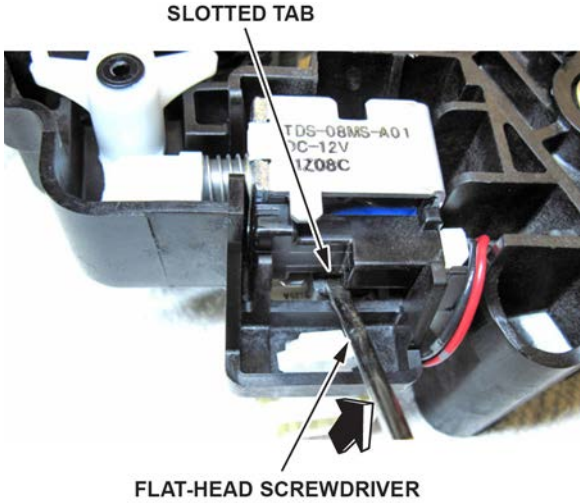

- Move the screwdriver handle up to release the tab and pry out the solenoid.

- Remove the shift interlock solenoid and lay it down next to the shift lever assembly. Do not disconnect the connector.

  NOTE: The solenoid plunger and its spring can fall out of the solenoid. If this happens, reassemble the shift interlock solenoid before setting it down.

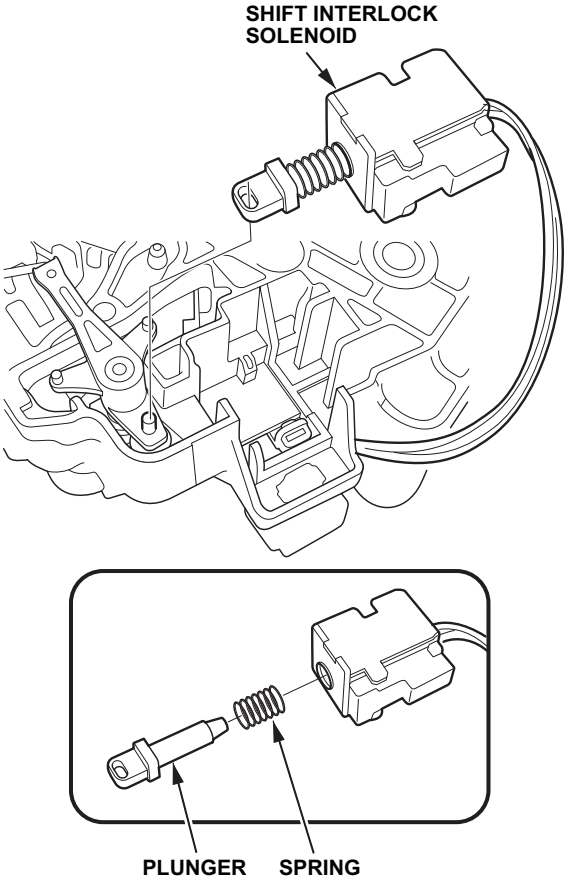

20. Remove the white shift interlock stopper from the shift lever assembly.

    NOTE: Do not wipe the grease from the shift lever assembly.

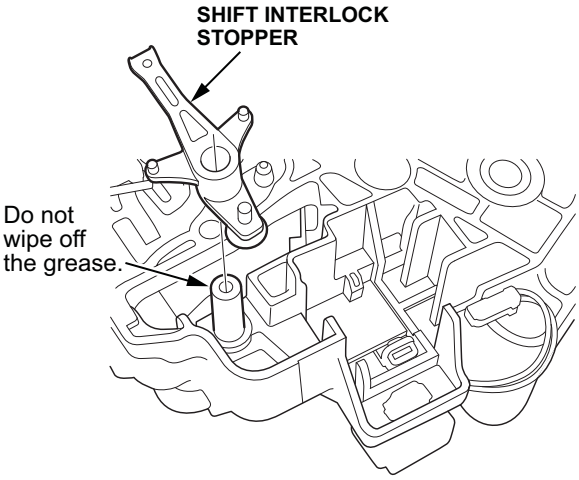

21. Install the new (blue) shift interlock stopper.

    NOTE: Do not wipe the grease off the new shift interlock stopper.

    > Shift Interlock Stopper

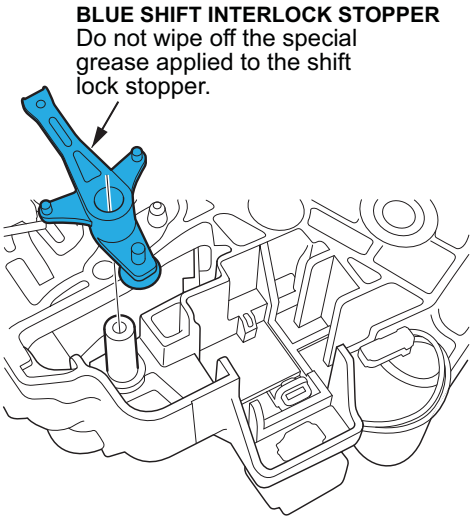

22. Reinstall the shift interlock solenoid by aligning the solenoid plunger joint with the tip of the shift interlock stopper, then push down on the bottom area of the solenoid (side with the printing) until you hear a click.

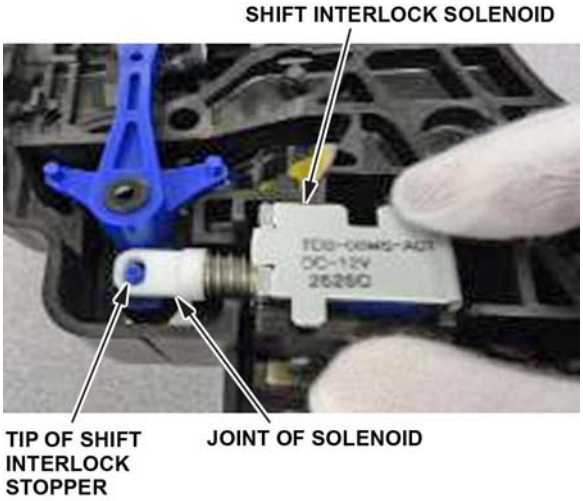

23. Make sure that the shift interlock stopper and solenoid motion is smooth.

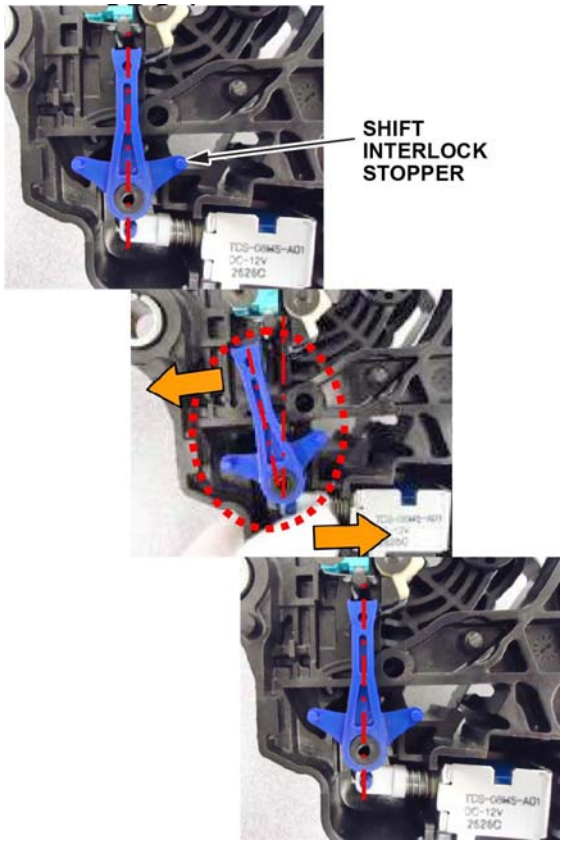

24. Reinstall the release spring and the shift interlock release. Press down on the shift interlock release until you hear a click.

    NOTE: Make sure that the slots on the release align with the corresponding grooves on the shift lever assembly.

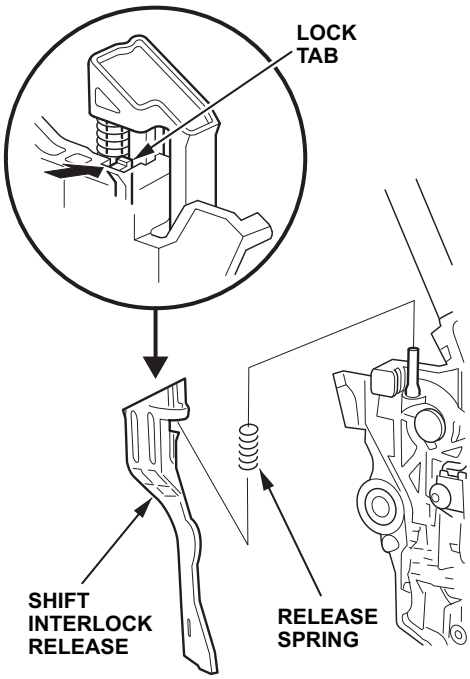

25. Press the shift interlock release button, then release it. Make sure the shift interlock release returns to its original position without sticking or binding.

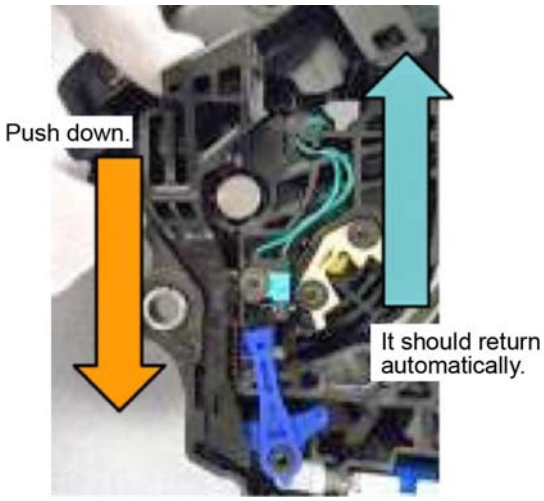

26. Make sure the shift lever moves easily into each gear position. Press the shift interlock release button to move the shift lever out of P.

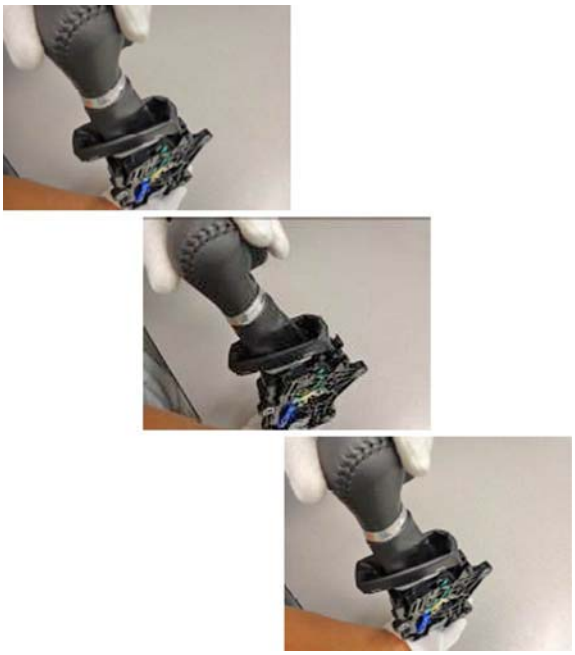

27. Make sure the green wires are properly routed and set in the cavity as shown.

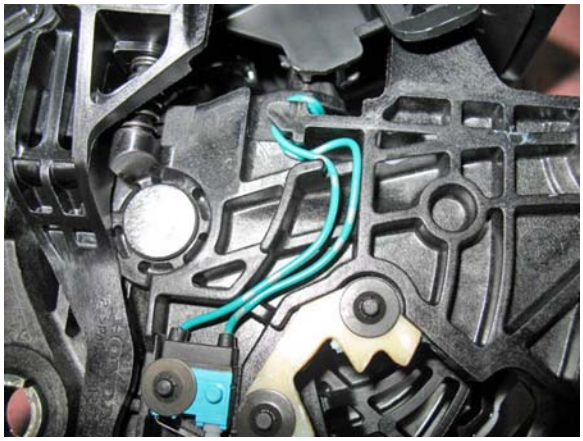

28. Reinstall the shift lever assembly.
    - Move the shift lever to R.
    - Lock the shift lever in R by inserting the bolt into the positioning holes.

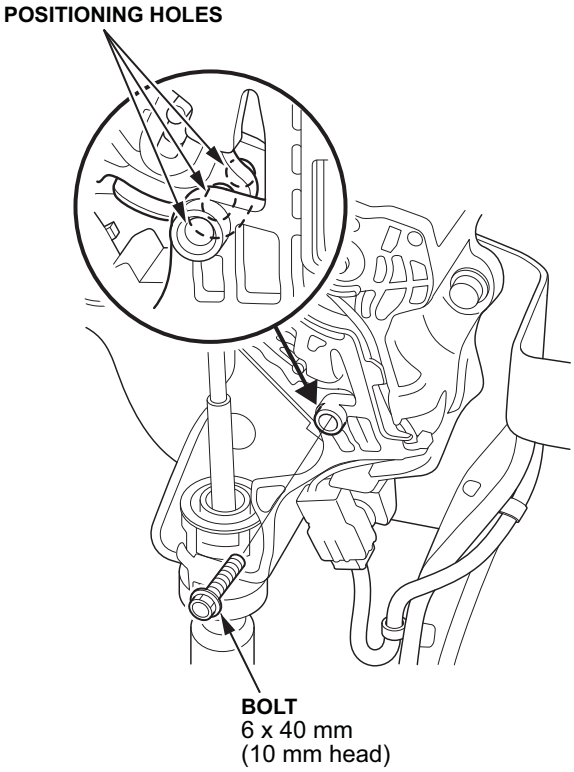

- Set the shift lever assembly into the center console, then install and finger-tighten the two bolts and nut.

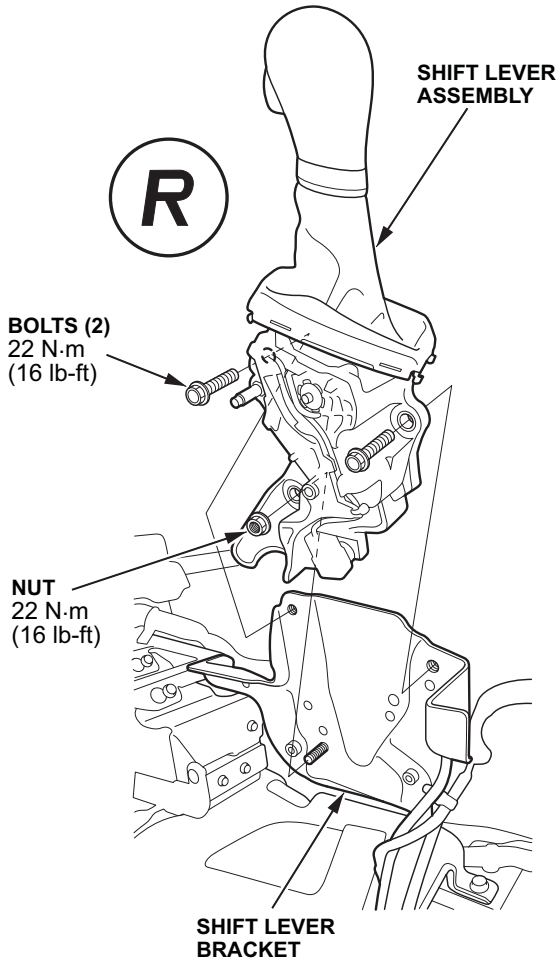

- Torque the two shift lever assembly bolts and nut to **22 N•m (16 lb-ft)**.
- Connect the shift lever connector.

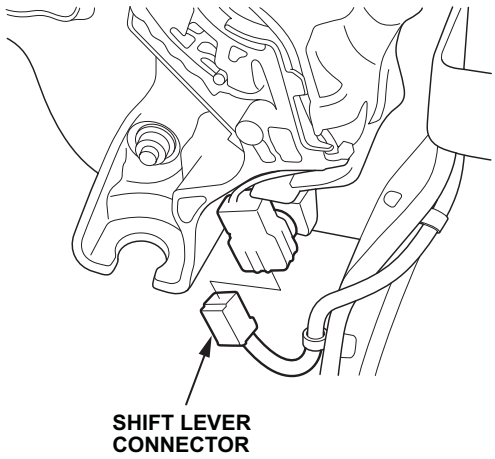

29. Press the engine start/stop button to select the ON mode, and make sure the R position indicator in the instrument panel is on.

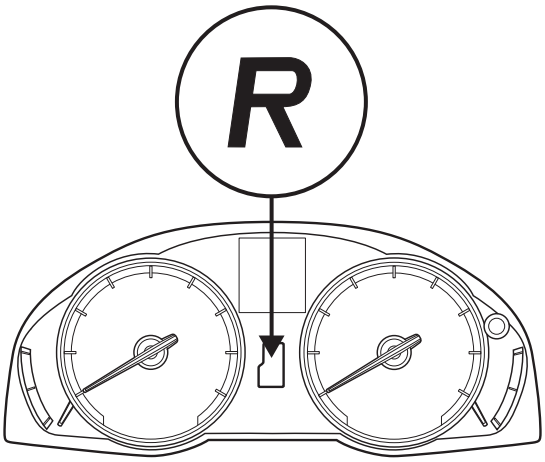

30. Reinstall the shift cable. First, click on the video below to see how the step is done.

- Align the shift cable slot (located between the socket holder and the socket holder retainer) with the opening of the shift cable bracket.

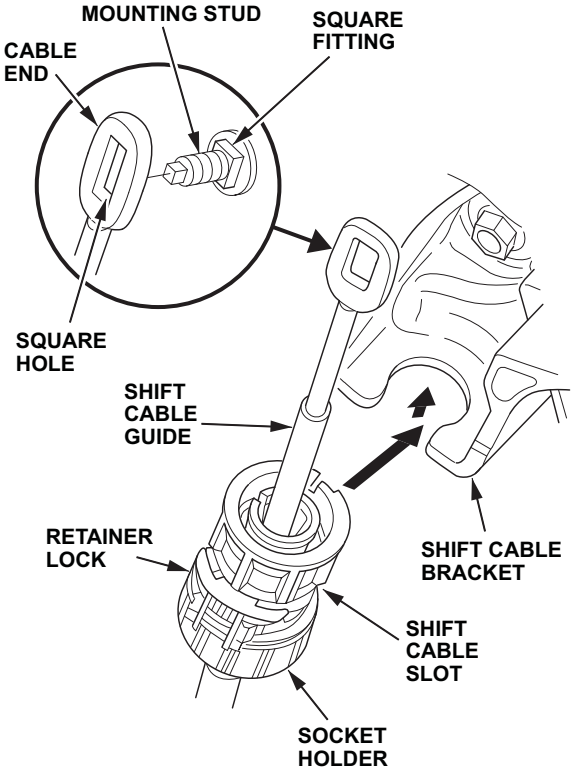

- Slide the socket holder onto the shift cable bracket while installing the shift cable end onto the mounting stud by aligning the square hole with the square fitting at the bottom of the stud.

  NOTE:
  - Do not install the shift cable by holding the shift cable guide, or the guide may break. If this happens, the entire shift cable must be replaced.
  - When the socket holder is installed onto the shift cable bracket, the retainer lock will unhinge. When the retainer lock unhinges, the spring tension is released, securing the shift cable to the bracket.

- Push in the retainer lock to lock the socket holder retainer.

  NOTE: Make sure the retainer lock fits into the hinged joint. If it does not, rotate the holder retainer counterclockwise while pushing the retainer lock until it locks.

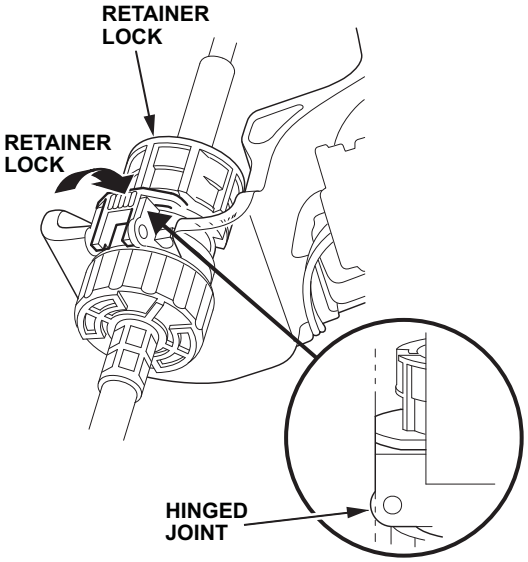

- Make sure the shift cable end is properly installed on the mounting stud.

  NOTE:
  - If the cable end is not properly installed, remove the socket holder and align the cable end over the stud before installing the holder retainer to the shift cable bracket.
  - Do not try to bend the cable to align the cable end over the mounting stud without removing the retainer holder.
  - You can rotate the mounting stud so that the shift cable end fits on the square fitting at the bottom of the stud.

PROPERLY INSTALLED:
Cable end rides on the bottom of the mounting stud.

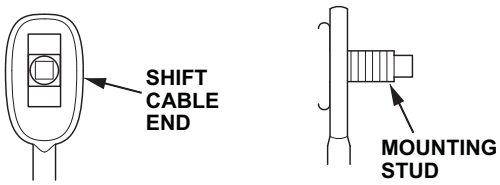

IMPROPERLY INSTALLED:
Cable end out of position with the mounting stud.

IMPROPERLY INSTALLED:
Cable end out of alignment with the mounting stud.

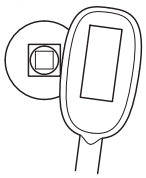

31. Reinstall the nut on the shift cable end and torque it to **22 N•m (16 lb-ft)**.

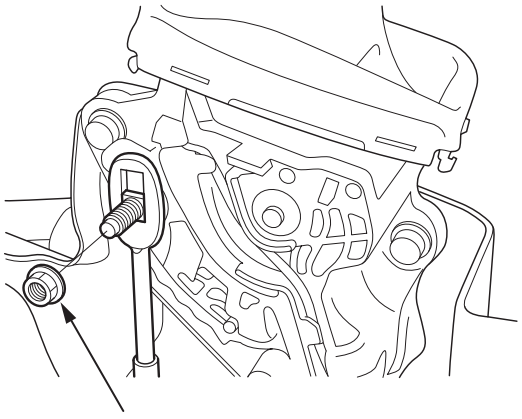

32. Remove the bolt.

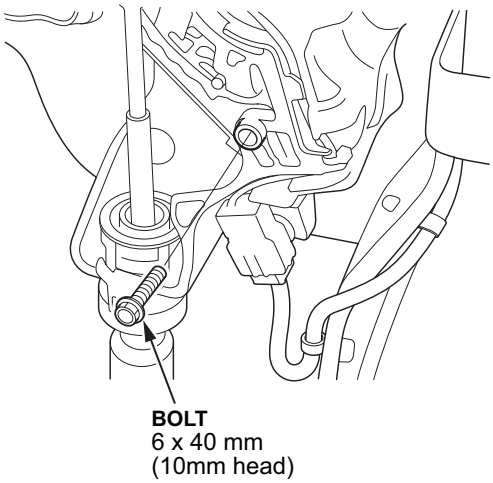

33. Move the shift lever to P.
34. Press and hold the brake pedal and move the shift lever to each gear position, making sure the indicator at the shift lever matches the indicator in the gauge assembly.
35. Move the shift lever to P and release the brake pedal.
36. Make sure the shift interlock works properly:
    - Try to move the shift lever out of P without pressing the brake pedal. It should not move out of P.
    - Use a key to release the shift interlock and move the shift lever out of P without pressing the brake pedal. You should be able to move the shift lever out of P and into the other positions. Move the shift lever back to P and confirm it locks.
37. Press the engine start/stop button to select the OFF mode.
38. Reinstall the driver's side center console side cover.
39. Reinstall the console pocket.
40. Reconnect the harness clip, the seat heater switch connectors, and the A/T gear position indicator panel light connector.
41. Reinstall the center console panel.
42. Reinstall the shift lever boot.
43. Reinstall the shift panel.
44. Reinstall the shift lock lid.

Example of Client Letter

May 2013

Safety Recall: 2013 RDX Shift Interlock Stopper – NHTSA Recall 13V-143

Dear Acura RDX Owner:

This notice is sent to you in accordance with the requirements of the National Traffic and Motor Vehicle Safety Act.

What is the reason for this notice?
Honda has decided that certain 2013 model year RDX vehicles fail to conform to the requirements of the portion of Federal Motor Vehicle Safety standard No. 114, "Brake Transmission Shift Interlock". There is a potential that at sub-freezing temperatures the brake shift interlock blocking mechanism could allow the automatic transmission gear selector lever to be moved from the Park position without pressing the brake pedal, which could cause the vehicle to roll away, increasing the risk of a crash.

What should you do?
Call any authorized Acura dealer and make an appointment to have the automatic transmission gear selector lever repaired at no cost to you. The complete replacement process may take approximately 36 minutes; however, your vehicle will need to be at the dealer for a longer period of time. We recommend that you plan to leave your vehicle for half a day to allow the dealer flexibility in scheduling.

Who to contact if you experience problems?
If you are not satisfied with the service you receive from your Honda dealer, you may write to:

American Honda Motor Co., Inc.
Acura Client Relations
Mail Stop 500-2N-7E
1919 Torrance Blvd.
Torrance, CA 90501-2746

If you believe that American Honda or the dealer has failed or is unable to remedy the noncompliance in your vehicle, without charge, within a reasonable period of time (60 days from the date you first contact the dealer for a repair appointment), you may submit a complaint to:

Administrator
National Highway Traffic Safety Administration
1200 New Jersey Ave., SE
Washington, DC 20590

Or call the toll-free Safety Hotline at 1-888-327-4236 (TTY 1-800-424-9153), or go to *http://www.safercar.gov*.

What to do if you feel this notice is in error
Registration records indicate that you are the current owner or lessee of a 2013 Acura RDX involved in this campaign. If this is not the case, or the name/address information is not correct, please complete and sign the Information Change Card and return it in the enclosed postage-paid envelope. We will then update our records.

Lessor Information
Federal law requires that any vehicle lessor receiving this recall notice must forward a copy of this notice to the lessee within 10 days.

If you have questions
If you have any questions about this notice, or need assistance with locating an Acura dealer, please call Acura Client Relations at 1-800-382-2238, and select option 4. U.S. clients can also locate a dealer online at *owners.Acura.com*. Clients in U.S. territories, please contact your local dealer/distributor.

We apologize for any inconvenience this campaign may cause you.

Sincerely,

American Honda Motor Co., Inc.
Acura Automobile Division