TOYOTA

Toyota Motor Sales, U.S.A., Inc.
19001 South Western Avenue, S207
Torrance, CA 90509-2991

TMS-NTC-12218
September 27, 2012

Recall Management Division
National Highway Traffic Safety Administration
1200 New Jersey Avenue, SE
Washington, DC 20590

Re: Toyota Safety Recall 12V-373 – Interim Dealer Notification

To whom it may concern,

Please find attached the Interim Dealer Notification Letter for Toyota Safety Recall 12V-373 on the following Toyota and Lexus vehicles:

- 2006 to Early 2011 Model Year RAV4
- 2010 Model Year HS250h

If you have any questions regarding this matter, please contact me at (310) 468-5316.

Sincerely,

Quality Compliance Assistant Manager

Attachments:
- Lexus 12V-373 (CLE) Dealer Notification (Interim)
- Toyota 12V-373 (C0J) Dealer Notification (Interim)

Original sent to Dealers 9/27/12

TOYOTA

Toyota Motor Sales, U.S.A., Inc.
19001 South Western Avenue
Torrance, CA 90501
(310) 468-4000

To: All Toyota Dealer Principals, Service Managers, Parts Managers

Subject: Safety Recall C0J – (C1J) ***Interim Notification***
2006 to Early 2011 Model Year RAV4 Vehicles
Rear Lower Suspension Arm No.1

As previously announced, in August, 2012, Toyota filed a Defect Information Report (DIR) with the National Highway Traffic Safety Administration (NHTSA) informing the agency of our intent to conduct a voluntary Safety Recall on 2006 to early 2011 Model Year RAV4 Vehicles.

In the Rear Suspension Arm No.1 Assembly ("arm"), if the nuts for adjusting the rear wheel alignment are not tightened following the proper procedure and torque specification when vehicle alignment service is performed, backlash may develop at the thread portion of the arm (shaft and turn-buckle), followed by formation of rust. If this occurs, threads may wear, causing the arm to separate, which could result in the loss of vehicle control.

The purpose of this communication is to inform you that Toyota will be mailing an interim notice to owners of vehicles covered by this Safety Recall. Please assist any customers that may contact your dealership by carefully reviewing the contents of this notification.

1. Interim Owner Notification

As communicated in the Preliminary Notification in August, Toyota is currently preparing the remedy for this Safety Recall. In the meantime, we are communicating the ***interim*** actions:

- To assure transparency with owners, Toyota will mail an ***interim*** owner notice in late September, 2012.
- The ***interim*** owner notification letter will advise owners: (1) of this safety recall, (2) of the fact they will receive a future notice once the remedy is available, and (3) Interim Inspection*: What to do if the driver experience an abnormal noise from the rear of the vehicle or if they have previously had a 4-wheel alignment performed.
  **Please note that the Interim Inspection does not complete this Safety Recall. Customers will still need to return to the dealer to have the remedy completed once it becomes available.*

Toyota tries very hard to obtain current customer name and address information when mailing owner letters. In the event your dealership receives a notice for a vehicle that was sold prior to the Safety Recall announcement, it is the dealership's responsibility to forward the interim owner letter to the customer who purchased the vehicle.

2. Interim Customer Handling and Replacement Criteria

If a customer contacts a dealership and has experienced the condition described or has previously had a 4-wheel alignment performed, dealerships are requested to assist them by setting up an appointment to perform the *interim inspection* and diagnose the condition.

If the condition is verified, please assist the customer by repairing the vehicle at **no charge**. The necessary parts can be ordered through your dealerships facing PDC. Please refer to the parts ordering section and warranty reimbursement section for additional details. ***At this time Toyota has a very limited number of parts available to support vehicle repairs. Dealers should only order parts for vehicles currently experiencing the condition described. All replaced parts are subject to Warranty Parts Return. Any parts replaced inappropriately will result in a claim debit.***

3. Pre-Owned Vehicles in Dealer Inventory

Toyota generally requests that dealers do not deliver any pre-owned vehicles in dealer inventory that are covered by a Safety Recall until the vehicle has been remedied. However, in this case, until the remedy is available, dealers can deliver pre-owned vehicles if they perform the Interim Inspection as indicated in the Technical Instructions. The dealership must also disclose to the customer that the vehicle is subject to a Safety Recall and that Toyota will send them a notification when the remedy is available. Please make sure the state DMV records are updated as soon as possible with the new owner name and address.

4. Timing of Safety Recall (Remedy) Notification

Once the remedy is available, Toyota will send (consistent with parts availability and dealership capacity) a second owner notification by first class mail, advising the vehicle owner to make an appointment with his/her authorized Toyota dealer to have the remedy performed at **no charge**.

5. Dealer Summary Reports

Summary Report will be provided in the remedy communication.

6. Number and Identification of Covered Vehicles

There are approximately 760,000 RAV4 (2006 to early 2011 model year) vehicles covered by this Safety Recall in the U.S.

Model	WMI	MY	VDS	START	FINISH
RAV4	2T3	2009	BF31V	W001119	W024119
			BF32V	W001207	W024120
			BF33V	W001117	W024117
			BF34V	W003775	W021681
			BF35V	W001421	W024111
			BK31V	W001143	W013774
			BK32V	W001142	W013693
			BK33V	W001162	W013773
			BK34V	W001688	W010762
			BK35V	W002139	W013749
			ZF31V	W001050	W016880
			ZF32V	W001048	W016874
			ZF33V	W001049	W016918
			ZF34V	W003810	W012950
			ZF35V	W001625	W016916
			ZK31V	W001081	W003645
			ZK32V	W001149	W003642
			ZK33V	W001076	W003644
			ZK34V	W001670	W002621
			ZK35V	W001965	W003631
		2010	BF4DV	W022899	W082387
			BK4DV	W013775	W036881
			DF4DV	W024130	W082385
			DK4DV	W013776	W036900
			EF4DV	W024745	W069582
			EK4DV	W014634	W036700
			JF4DV	W024129	W082307
			JK4DV	W013811	W036888
			KF4DV	W016950	W052601
			KK4DV	W003824	W008864
			RF4DV	W022777	W082383
			RK4DV	W013813	W036821
			WF4DV	W016936	W052514
			WK4DV	W003659	W008863
			XF4DV	W018112	W052094
			XK4DV	W003701	W006779
			YF4DV	W016920	W052604
			YK4DV	W003435	W008860
			ZF4DV	W016923	W052607
			ZK4DV	W003652	W008861

Model	WMI	MY	VDS	START	FINISH
RAV4	2T3	2011	BF4DV	W077612	W082793
			BK4DV	W036909	W037018
			DF4DV	W082411	W082788
			DK4DV	W036901	W037033
			JF4DV	W082409	W082756
			JK4DV	W037020	W037025
			KF4DV	W052688	W052839
			RF4DV	W082407	W082781
			RK4DV	W036971	W036988
			WF4DV	W050399	W052858
			WK4DV	W008866	W008877
			YF4DV	W052611	W052872
			YK4DV	W008867	W008880
			ZF4DV	W052609	W052873
			ZK4DV	W008870	W008870
	JTM	2006	BD31V	5000052	5051226
				6000010	6022606
			BD32V	5000029	5051222
				6000011	6022607
			BD33V	5000087	5051264
				6000046	6022596
			BD34V	5000058	5051164
			BD35V	5000031	5051248
			BK31V	5000008	5012690
				6000015	6010002
			BK32V	5000011	5012686
				6000012	6010006
			BK33V	5000022	5012692
				6000031	6009992
			BK34V	5000028	5012673
			BK35V	5000010	5012694
			ZD31V	5000027	5032586
				6000026	6020783
			ZD32V	5000006	5032534
				6000002	6020798
			ZD33V	5000019	5032587
				6000005	6020842
			ZD34V	5000025	5032507
			ZD35V	5000005	5032573

Model	WMI	MY	VDS	START	FINISH
RAV4	JTM	2006	ZK31V	5000007	5005689
				6000007	6003129
			ZK32V	5000005	5005688
				6000005	6003131
			ZK33V	5000011	5005690
				6000008	6003132
			ZK34V	5000004	5005681
			ZK35V	5000060	5005684
		2007	BD31V	5051303	5124254
				6022623	6054728
			BD32V	5051315	5124285
				6022613	6054737
			BD33V	5051301	5124308
				6022615	6054736
			BD34V	5052182	5124068
			BD35V	5051278	5124278
			BK31V	5012706	5040741
				6010008	6028074
			BK32V	5012016	5040743
				6010025	6028066
			BK33V	5012697	5040747
				6010022	6028069
			BK34V	5012752	5040742
			BK35V	5012701	5040698
			ZD31V	5031315	5077936
				6020846	6052970
			ZD32V	5031131	5077984
				6019942	6052984
			ZD33V	5032593	5078025
				6020843	6052993
			ZD34V	5032641	5077858
			ZD35V	5032630	5077997
			ZK31V	5005691	5016136
				6002895	6010016
			ZK32V	5005392	5016123
				6003133	6010013
			ZK33V	5005699	5016137
				6003135	6010017
			ZK34V	5005692	5016122
			ZK35V	5005728	5016021
		2008	BD31V	5122515	5215912
				6054747	6089730
			BD32V	5124567	5215895
				6054743	6089718
			BD33V	5124318	5215928
				6054075	6089729
			BD34V	5124315	5215683
			BD35V	5124310	5215906
			BK31V	5040755	5071475
				6028076	6050078
			BK32V	5039902	5071462
				6028075	6050082
			BK33V	5040768	5071478
				6028079	6050066
			BK34V	5040763	5071435
			BK35V	5040804	5071479
			ZD31V	5078027	5117091

Model	WMI	MY	VDS	START	FINISH
RAV4	JTM	2008	ZD31V	6052994	6081056
			ZD32V	5078035	5117086
				6052998	6081048
			ZD33V	5076662	5117146
				6052995	6081084
			ZD34V	5078041	5117037
			ZD35V	5078033	5117144
			ZK31V	5015779	5024047
				6010018	6016058
			ZK32V	5016141	5024048
				6010023	6016055
			ZK33V	5016138	5024037
				6010021	6016053
			ZK34V	5016157	5024038
			ZK35V	5016148	5024022
		2009	BF31V	5000104	5017181
				6000003	6000003
				D000148	D021298
			BF32V	5000105	5017187
				6000000	6000000
				D000170	D021282
			BF33V	5000109	5017205
				6000004	6000004
				D000124	D021303
			BF34V	5000106	5011765
			BF35V	5000103	5017199
			BK31V	5070458	5084189
				6041373	6041905
				D000125	D010236
			BK32V	5057953	5084187
				6049697	6049713
				D000150	D010128
			BK33V	5057681	5084128
				D000101	D010235
			BK34V	5071496	5084167
			BK35V	5071507	5084172
			ZF31V	5000103	5014236
				6000000	6000002
				D000102	D015503
			ZF32V	5000110	5014237
				6000001	6000004
				D000101	D015507
			ZF33V	5000105	5014242
				6000003	6000007
				D000109	D015511
			ZF34V	5000120	5014170
			ZF35V	5000104	5014232
			ZK31V	5023836	5026109
				D000103	D003176
			ZK32V	5023823	5026102
				6015916	6015951
				D000112	D003174
			ZK33V	5024054	5026039
				6015898	6015967
				D000101	D003135
			ZK34V	5024061	5026106
			ZK35V	5024071	5025801

Model	WMI	MY	VDS	START	FINISH
RAV4	JTM	2010	BF4DV	5017206	5037249
				D021304	D039942
			BK4DV	5084190	5098459
				D010244	D017766
			DF4DV	5017212	5037209
				D021305	D039591
			DK4DV	5084192	5098458
				D010237	D017767
			EF4DV	5021182	5033749
			EK4DV	5084606	5096973
			JF4DV	5017209	5037237
			JK4DV	5084196	5098439
			KF4DV	5014245	5032167
			KK4DV	5026161	5027285
			RF4DV	5017208	5037242
				D021309	D039590
			RK4DV	5084203	5098457
				D010242	D017704
			WF4DV	5014246	5032119
				D015514	D028128
			WK4DV	5026116	5027361
				D003177	D004794
			XF4DV	5016939	5031934
			XK4DV	5026233	5027247
			YF4DV	5013774	5032161
				D015517	D029440

Model	WMI	MY	VDS	START	FINISH
RAV4	JTM	2010	YK4DV	5026113	5027372
				D003141	D004796
			ZF4DV	5014243	5032169
				D015512	D029469
			ZK4DV	5026110	5027371
				D003182	D004788
		2011	BF4DV	5037250	5037816
			DF4DV	5037541	5037541
				D039852	D039852
			EF4DV	5037428	5037474
			JF4DV	5036972	5037773
			KF4DV	5032171	5032615
			KK4DV	5027374	5027382
			RF4DV	5037253	5037813
			RK4DV	5098183	5098978
			WF4DV	5032170	5032622
			WK4DV	5027373	5027384
			XF4DV	5032183	5032209
			YF4DV	5032383	5032596
			YK4DV	5027377	5027381
				D004797	D004797
			ZF4DV	5032172	5032613
				D029470	D029470
			ZK4DV	5027376	5027385
				D004782	D004782

Please note that only owners of the covered vehicles will receive the Interim Notification. If a dealer is contacted by an owner who has not yet received the notification, but would like the Interim Inspection performed, Dealers can ***verify coverage by confirming through Dealer Daily/TIS.***

7. Parts Ordering

At this time Toyota has a very limited number of parts available to support vehicle repairs. Dealers should only order parts for vehicles currently experiencing the condition described. Orders can be placed through the dealership's facing PDC. The kits have been placed on Dealer Ordering Solutions and will be systematically released daily based on dealer ordering criteria.

Part Number	Parts Name	Qty. Per/Veh
04002-22142	ARM KIT, RR SUSPENSION, NO.1 *	1 or 2 (As Needed)

Each dealership will receive specific dealer ordering criteria in an email from their facing PDC Manager based on Repair Order Volume * PDC Affected UIO. Therefore, it is vital that each dealership work with both Parts and Service to immediately file Safety Recall claims and coordinate appropriate kit orders. A sample of the Parts Allocation Report has been attached below for your reference.

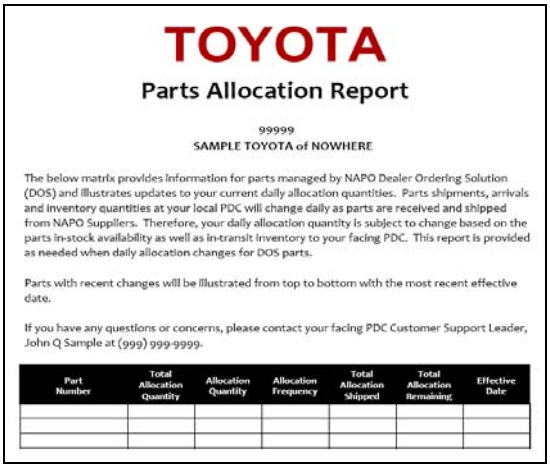

TOYOTA

Parts Allocation Report

99999
SAMPLE TOYOTA of NOWHERE

The below matrix provides information for parts managed by NAPO Dealer Ordering Solution (DOS) and illustrates updates to your current daily allocation quantities. Parts shipments, arrivals and inventory quantities at your local PDC will change daily as parts are received and shipped from NAPO Suppliers. Therefore, your daily allocation quantity is subject to change based on the parts in-stock availability as well as in-transit inventory to your facing PDC. This report is provided as needed when daily allocation changes for DOS parts.

Parts with recent changes will be illustrated from top to bottom with the most recent effective date.

If you have any questions or concerns, please contact your facing PDC Customer Support Leader, John Q Sample at (999) 999-9999.

Part Number	Total Allocation Quantity	Allocation Quantity	Allocation Frequency	Total Allocation Shipped	Total Allocation Remaining	Effective Date

8. Interim Inspection Procedures

The interim inspection should only be performed on Pre-Owned vehicles in dealer inventory, on vehicles where the customer has experienced an abnormal noise from the rear of the vehicle or if the vehicle previously had a 4-wheel alignment performed.

For ***Interim Inspection*** procedure, please refer to the Technical Instructions found on TIS.

Conduct all applicable, non-completed Safety Recall and Service Campaigns on the vehicle during the time of appointment.

9. *Interim* Warranty Reimbursement Procedure

2006 to early 2011 Model Year RAV4 Vehicles

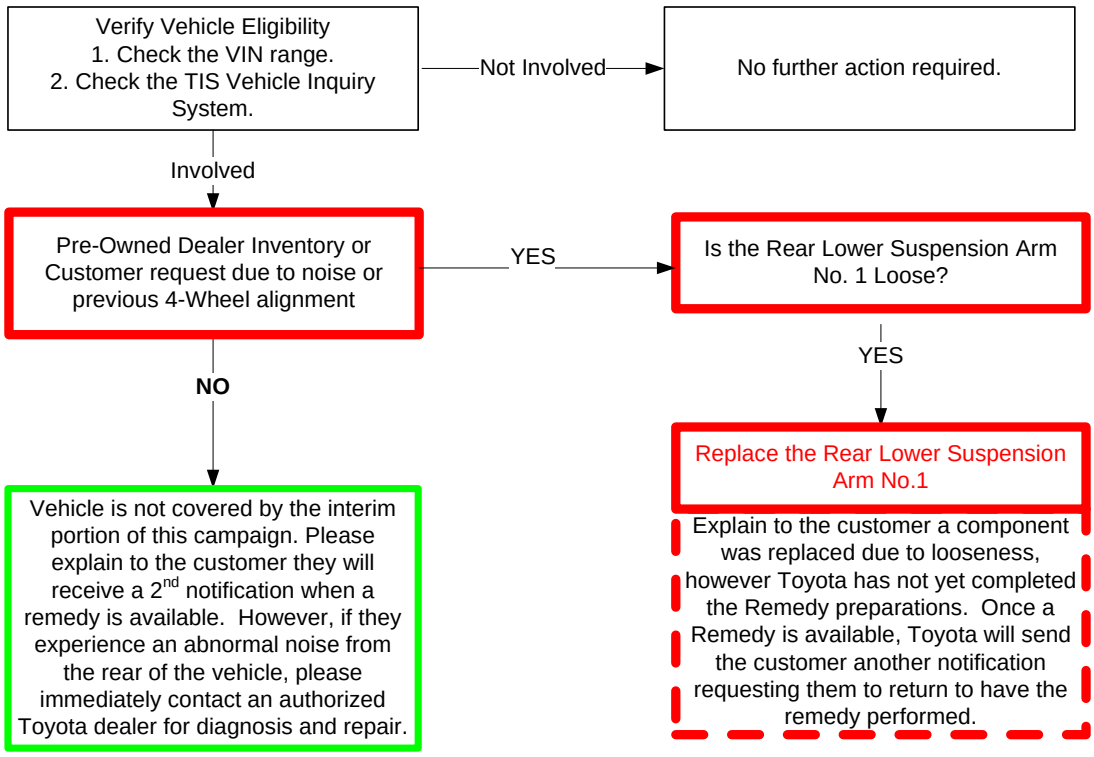

The following operation codes are only to be used for vehicles currently experiencing the condition described. *Note: When the remedy is available it will NOT involve replacement of the "Arm"*

Safety Recall	Model	Op. Code	Description	Flat Rate Hour
C1J	RAV4	2509HA	Check Suspension Arm for Looseness	*0.4 hr/vehicle*
		2509HB	Suspension Arm Loose – Replace 1 Side	*2.1 hr/vehicle*
		2509HC	Suspension Arm Loose – Replace 2 Sides	*2.3 hr/vehicle*

- The flat rate times include 0.1 hours for administrative cost per unit for the dealership.
- The flat rate times for Op. Codes 2509HB and 2509HC include the necessary time to perform a vehicle alignment adjustment.
- Rental Car: Use "RT" sublet type for Op. Code 2509HB and 2509HC. In the event the rear suspension arm is not available, a customer rental car through the Toyota-Rent-A-Car (TRAC) Program is available for a maximum of 3 days at a maximum rate of $35 per day.

(Interim Warranty Reimbursement Procedure CONTINUED . . .)

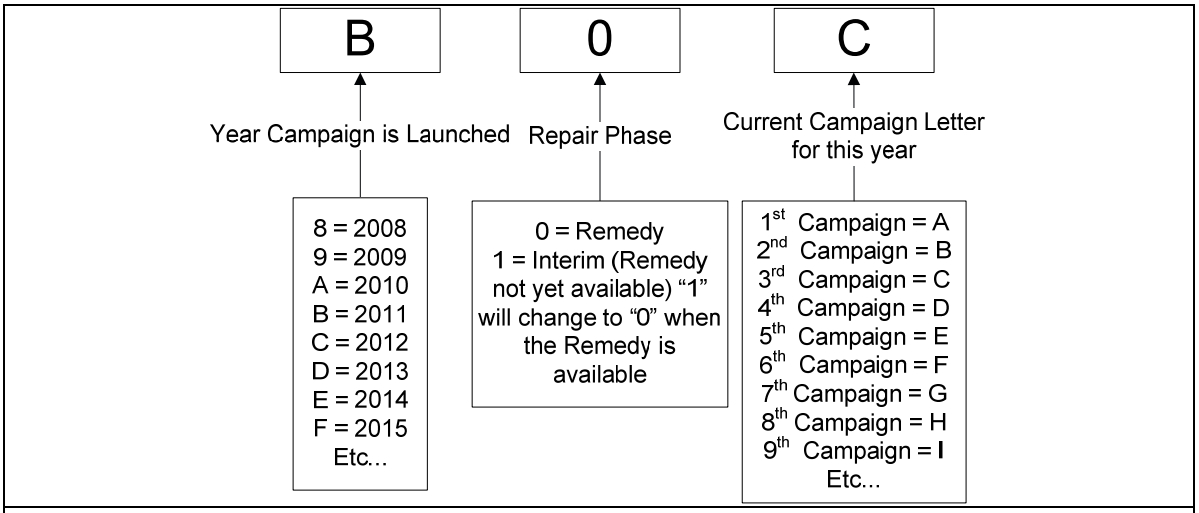

Examples:
A0D = Launched in 2010, Remedy Phase, 4th Campaign Launched in 2010
B1E = Launched in 2011, Interim Phase, 5rd Campaign Launched in 2011
C1J = Launched in 2012, Interim Phase, 10th Campaign Launched in 2012

10. <u>Repair Quality Confirmation</u>

The repair quality of covered vehicles is extremely important to Toyota. To help ensure that all vehicles have the repair performed correctly, please designate at least one associate (someone other than the individual who performed the repair) to verify the repair quality of every vehicle prior to customer delivery.

11. <u>Media Contacts</u>

It is imperative that all media contacts (local and national) receive a consistent message. In this regard, all media contacts must be directed to Brian Lyons (310) 468-2552 in Toyota Corporate Communications. (Please do not provide this number to customers. Please provide this contact to only media associates.)

12. <u>Customer Contacts</u>

A Q&A has been attached for your use in the event you receive a customer contact. If a customer has further questions, please direct the inquiry to the Toyota Customer Experience Center at 1-800-331-4331.

Please review this entire package with your Service and Parts staff to familiarize them with the proper step-by-step procedures required to implement this Safety Recall.

Thank you for your cooperation.
TOYOTA MOTOR SALES, U.S.A., INC.

Safety Recall C0J (C1J Interim Notice)
2006 to early 2011 Model Year Toyota RAV4 Vehicles
Rear Lower Suspension Arm No.1 – Q&A

Background
As previously announced, on August 1, 2012, Toyota filed a Defect Information Report (DIR) with the National Highway Traffic Safety Administration (NHTSA) informing the agency of our intent to conduct a voluntary Safety Recall on 2006 to early 2011 Model Year RAV4 Vehicles.

Toyota is currently working on developing the remedy for this condition; In the meantime Toyota will mail an interim notice to owners of vehicles covered by this Safety Recall.

Interim Owner Notice
Toyota is currently working on developing the remedy for this Safety Recall. In the meantime, to assure transparency with owners, Toyota will mail an ***interim*** owner notification in late September, 2012.

The ***interim*** owner notification letter will advise owners: (1) of this safety recall, (2) of the fact they will receive a future notice once the remedy is available, and (3) Interim Inspection:* What to do if the driver experience an abnormal noise from the rear of the vehicle or if they have previously had a 4-wheel alignment performed.
**Please note that the Interim Inspection does not complete this Safety Recall. Customers will still need to return to the dealer to have the remedy completed once it becomes available.*

The following information is provided to assist in responding to customer inquiries only.

Q1: What is the condition?
A1: In the Rear Suspension Arm No.1 Assembly ("arm"), if the nuts for adjusting the rear wheel alignment are not tightened following the proper procedure and torque specification when vehicle alignment service is performed, backlash may develop at the thread portion of the arm (shaft and turn-buckle), followed by formation of rust. If this occurs, threads may wear, causing the arm to separate, which could result in the loss of vehicle control.

Q2: What is the cause of condition?
A2: This condition may occur if the nuts for adjusting the rear wheel alignment are not tightened following the proper procedure and torque specification when vehicle alignment service is performed.

Q3: ***Are there any warnings that this condition may occur?***
A3: Yes, if the Rear Tie Rod has become loose the driver may notice an abnormal noise from the rear of the vehicle.

Q3a: What should a customer do if they hear an abnormal noise from the rear of the vehicle?
A3a: If a driver hears an abnormal noise from the rear of the vehicle, the driver should contact any authorized Toyota dealer for diagnosis, and if applicable, repair.

Q4: What is Toyota going to do?
A4: **Toyota is currently working on preparing the remedy.** Once the remedy is available, we will notify owners again.

The ***interim*** owner notification letter will advise owners: (1) of this safety recall, (2) of the fact they will receive a future notice once the remedy is available, and (3) Interim Inspection:* What to do if the driver experience an abnormal noise from the rear of the vehicle or if they have previously had a 4-wheel alignment performed.
**Please note that the Interim Inspection does not complete this Safety Recall. Customers will still need to return to the dealer to have the remedy completed once it becomes available.*

Once the remedy is available, Toyota will send a second owner notification by first class mail advising owners to make an appointment with his/her authorized Toyota dealer to have the remedy performed at **NO CHARGE**.

Q4a: When does Toyota anticipate the remedy will be available?

A4a: Toyota anticipates it will take several weeks to prepare the remedy.

Q4b: What if this condition occurs before the Remedy is available?

A4b: If this condition occurs before the Remedy is available, the owner should contact an authorized Toyota dealership for diagnosis and an appropriate repair as soon as possible. If the problem is related to the identified condition, the repair will be performed at **no charge**.

Q4c: What if a customer previously had a 4-Wheel alignment performed?

A4c: If the customer has previously had a 4-Wheel vehicle alignment performed, we ask that the customer make an appointment with his/her authorized Toyota dealer to have the interim inspection performed.

Q4d: If components are replaced during the interim will the customer need to return for the Remedy?

A4d: Yes, the Interim Inspection does not complete this Safety Recall. Customers will still need to return to the dealer to have the remedy completed once it becomes available.

Q5: Which and how many Toyota vehicles are covered?

A5: There are approximately 760,000 Toyota RAV4 vehicles and approximately 18,000 Lexus HS250h Vehicles covered by this Safety Recall in the U.S.

Model Name	Model Year	Production Period	Number of Vehicles (Approx.)
RAV4	2006 to Early 2011	October, 2005 through Early September, 2010	760,000
HS250	2010	July, 2009 through Late August, 2010	18,000

Q5a: Are there any other Toyota or Lexus vehicles covered by this Safety Recall?

A5a: No. There are no other Toyota or Lexus models covered by this Safety Recall.

Q6: What if a customer has previously paid for repairs to their vehicle for the condition described above?

A6: Reimbursement consideration instructions will be provided in the remedy owner letter.

Q7: What if a customer is not willing to drive the vehicle until the remedy has been completed?

A7: For customers who have not experienced this condition but do not feel comfortable driving the vehicle

- We request that dealers work with the customers and answer any questions they may have based on the information in these Q&As.
- In the event the customer's concerns are not alleviated, on a case-by-case basis, please refer the customer to the Customer Experience Center.

The Toyota Customer Experience Center can be reached at 1-888-270-9371 Monday through Friday, 5:00 am to 6:00 pm, or Saturday 7:00 am through 4:00 pm Pacific Time.

2006 to Early 2011 Model Year Toyota RAV4 Vehicles
Rear Lower Suspension Arm No.1
SAFETY RECALL NOTICE (*Interim Notice*)

INTERIM NOTICE
We are currently preparing the remedy. We will notify you again when the remedy is ready.

[VIN]

Dear Toyota Customer:

This notice is being sent to you in accordance with the requirements of the National Traffic and Motor Vehicle Safety Act. Toyota has decided that a defect, which relates to motor vehicle safety, exists in 2006 to early 2011 model year RAV4 vehicles.

The purpose of this letter is to explain what the recall is about and to keep you informed of Toyota's implementation plan. We are currently making preparations to implement the Safety Recall remedy. **We will send you another notification when the remedy is available.**

What is the condition?

In the Rear Suspension Arm No.1 Assembly ("arm"), if the nuts for adjusting the rear wheel alignment are not tightened following the proper procedure and torque specification when vehicle alignment service is performed, rust may form on the arm. If this occurs, threads may wear, causing the arm to separate, which could result in the loss of vehicle control, increasing the risk of a crash.

What should you do in the *interim*?

We appreciate your patience while we prepare the remedy. In the meantime, ***if you experience an abnormal noise from the rear of the vehicle or if you previously had a 4-wheel alignment performed,*** we ask that you make an appointment with your authorized Toyota dealer to have the Rear Lower Suspension Arm No.1 inspected. If it is found to be loose, the Rear Lower Suspension Arm No.1 will be replaced at **NO CHARGE** to you. *Please note that you will still need to return to the dealer to have the remedy completed once it is available.*

You will receive a second owner notification letter when the remedy is available.

If you would like to update your vehicle ownership or contact information, please go to www.toyota.com/ownersupdate. You will need your full 17-digit Vehicle Identification Number (VIN) to input the new information.

What if you have other questions?

Your local Toyota dealer will be more than happy to answer any of your questions. If you require further assistance, you may contact the Toyota Customer Experience Center at 1-888-270-9371 Monday through Friday, 5:00 am to 6:00 pm, Saturday 7:00 am through 4:00 pm Pacific Time.

If you believe that the dealer or Toyota has failed or is unable to remedy the defect within a reasonable time, you may submit a complaint to the Administrator, National Highway Traffic Safety Administration, 1200 New Jersey Avenue S.E., Washington, D.C. 20590, or call the toll free Vehicle Safety Hot Line at 1-888-327-4236 (TTY: 1-800-424-9153), or go to http://www.safercar.gov.

What if you have previously paid for repairs to your vehicle for this specific condition?

If you have previously paid for repairs to your vehicle for this specific condition prior to receiving this letter, we will provide you instructions for reimbursement consideration in the second owner letter once the remedy preparations are completed.

If you are a vehicle lessor, Federal law requires that any vehicle lessor receiving this recall notice must forward a copy of this notice to the lessee within ten days.

We have sent this notice in the interest of your continued satisfaction with our products, and we sincerely regret any inconvenience this condition may have caused you.

Thank you for driving a Toyota.

Sincerely,

TOYOTA MOTOR SALES, U.S.A., INC.

SAMPLE

INTERIM TECHNICAL INSTRUCTIONS

FOR

SAFETY RECALL C0J INTERIM C1J

REAR LOWER SUSPENSION ARM No.1

2006 – EARLY 2011 MODEL YEAR RAV4

ONLY PERFORM THE INTERIM CAMPAIGN UPON CUSTOMER REQUEST

I. OPERATION FLOW CHART

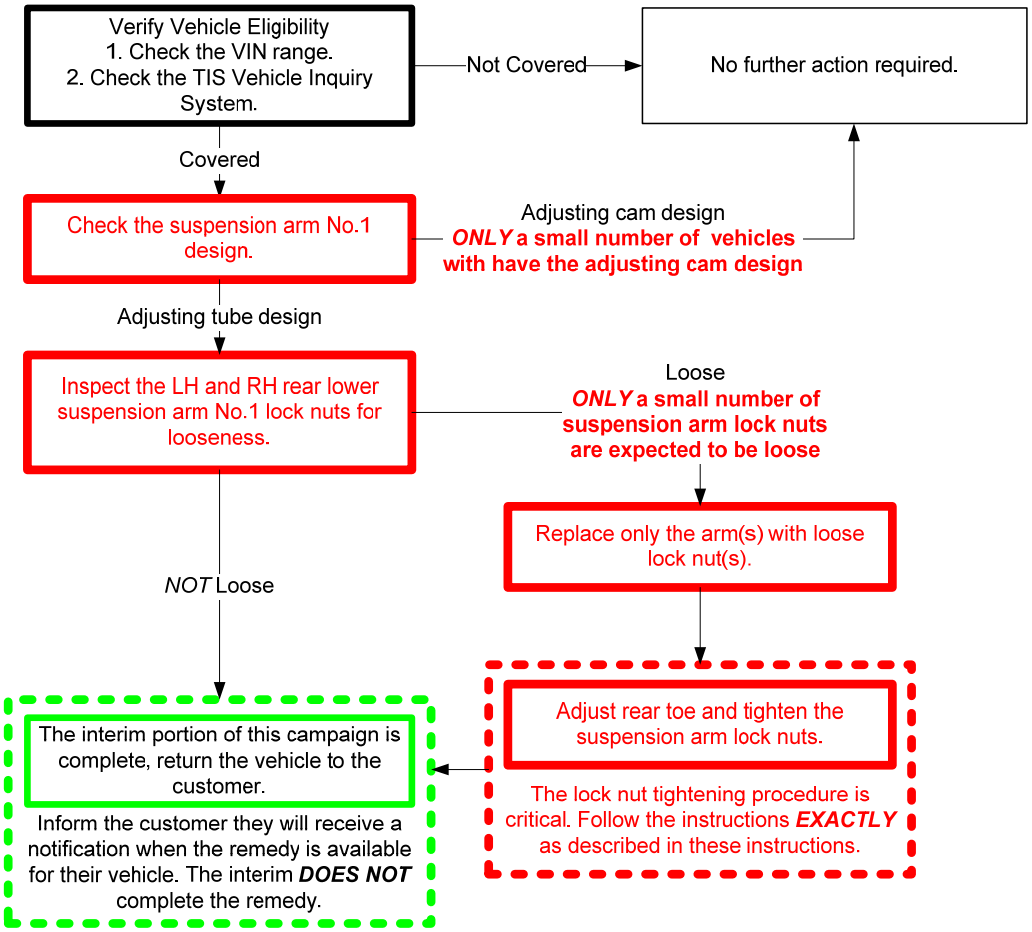

II. PREPARATION

A. PARTS

Part Number	Part Description	Quantity
04002-22142	Suspension Arm Kit*	1

*The kit above includes the following parts.

48710-0R010	Rear lower suspension arm No.1	1
90179-12027	Nut	1

***Only a small number of vehicles will require suspension arm replacement, follow these instructions closely to determine if suspension arm replacement is necessary. Parts will be placed on dealer ordering solutions (DOS), for details refer to the dealer letter.**

B. TOOLS & EQUIPMENT

- Standard hand tools
- Torque wrench
- 22mm crowfoot
- 4 Wheel alignment machine

SST – This is an essential special service tool that the dealership should have.

Part Number	Part Name	Quantity
09960-20010	Ball Joint Puller Set	1

III. BACKGROUND

In the Rear Suspension Arm No.1 Assembly (”arm”), if the nuts for adjusting the rear wheel alignment are not tightened following the proper procedure and torque specification when vehicle alignment service is performed, backlash may develop at the thread portion of the arm (shaft and turn-buckle), followed by formation of rust. If this occurs, threads may wear, causing the arm to separate, which could result in the loss of vehicle control.

IV. IDENTIFICATION OF AFFECTED VEHICLES

A. COVERED VIN RANGE

WMI	Year	VDS Range	
		VDS	Range
2T3	2009	BF31V	W001119-W024119
2T3	2009	BF32V	W001207-W024120
2T3	2009	BF33V	W001117-W024117
2T3	2009	BF34V	W003775-W021681
2T3	2009	BF35V	W001421-W024111
2T3	2009	BK31V	W001143-W013774
2T3	2009	BK32V	W001142-W013693
2T3	2009	BK33V	W001162-W013773
2T3	2009	BK34V	W001688-W010762
2T3	2009	BK35V	W002139-W013749
2T3	2009	ZF31V	W001050-W016880
2T3	2009	ZF32V	W001048-W016874
2T3	2009	ZF33V	W001049-W016918
2T3	2009	ZF34V	W003810-W012950
2T3	2009	ZF35V	W001625-W016916
2T3	2009	ZK31V	W001081-W003645
2T3	2009	ZK32V	W001149-W003642
2T3	2009	ZK33V	W001076-W003644
2T3	2009	ZK34V	W001670-W002621
2T3	2009	ZK35V	W001965-W003631
2T3	2010	BF4DV	W022899-W082387
2T3	2010	BK4DV	W013775-W036881
2T3	2010	DF4DV	W024130-W082385
2T3	2010	DK4DV	W013776-W036900
2T3	2010	EF4DV	W024745-W069582
2T3	2010	EK4DV	W014634-W036700
2T3	2010	JF4DV	W024129-W082307
2T3	2010	JK4DV	W013811-W036888
2T3	2010	KF4DV	W016950-W052601
2T3	2010	KK4DV	W003824-W008864
2T3	2010	RF4DV	W022777-W082383
2T3	2010	RK4DV	W013813-W036821
2T3	2010	WF4DV	W016936-W052514
2T3	2010	WK4DV	W003659-W008863
2T3	2010	XF4DV	W018112-W052094
2T3	2010	XK4DV	W003701-W006779
2T3	2010	YF4DV	W016920-W052604
2T3	2010	YK4DV	W003435-W008860
2T3	2010	ZF4DV	W016923-W052607
2T3	2010	ZK4DV	W003652-W008861
2T3	2011	BF4DV	W077612-W082793
2T3	2011	BK4DV	W036909-W037018
2T3	2011	DF4DV	W082411-W082788
2T3	2011	DK4DV	W036901-W037033
2T3	2011	JF4DV	W082409-W082756
2T3	2011	JK4DV	W037020-W037025
2T3	2011	KF4DV	W052688-W052839
2T3	2011	RF4DV	W082407-W082781
2T3	2011	RK4DV	W036971-W036988
2T3	2011	WF4DV	W050399-W052858
2T3	2011	WK4DV	W008866-W008877
2T3	2011	YF4DV	W052611-W052872
2T3	2011	YK4DV	W008867-W008880

WMI	Year	VDS Range	
		VDS	Range
2T3	2011	ZF4DV	W052609-W052873
2T3	2011	ZK4DV	W008870-W008870
JTM	2006	BD31V	5000052-6022606
JTM	2006	BD32V	5000029-6022607
JTM	2006	BD33V	5000087-6022596
JTM	2006	BD34V	5000058-5051164
JTM	2006	BD35V	5000031-5051248
JTM	2006	BK31V	5000008-6010002
JTM	2006	BK32V	5000011-6010006
JTM	2006	BK33V	5000022-6009992
JTM	2006	BK34V	5000028-5012673
JTM	2006	BK35V	5000010-5012694
JTM	2006	ZD31V	5000027-6020783
JTM	2006	ZD32V	5000006-6020798
JTM	2006	ZD33V	5000019-6020842
JTM	2006	ZD34V	5000025-5032507
JTM	2006	ZD35V	5000005-5032573
JTM	2006	ZK31V	5000007-6003129
JTM	2006	ZK32V	5000005-6003131
JTM	2006	ZK33V	5000011-6003132
JTM	2006	ZK34V	5000004-5005681
JTM	2006	ZK35V	5000060-5005684
JTM	2007	BD31V	5051303-6054728
JTM	2007	BD32V	5051315-6054737
JTM	2007	BD33V	5051301-6054736
JTM	2007	BD34V	5052182-5124068
JTM	2007	BD35V	5051278-5124278
JTM	2007	BK31V	5012706-6028074
JTM	2007	BK32V	5012016-6028066
JTM	2007	BK33V	5012697-6028069
JTM	2007	BK34V	5012752-5040742
JTM	2007	BK35V	5012701-5040698
JTM	2007	ZD31V	5031315-6052970
JTM	2007	ZD32V	5031131-6052984
JTM	2007	ZD33V	5032593-6052993
JTM	2007	ZD34V	5032641-5077858
JTM	2007	ZD35V	5032630-5077997
JTM	2007	ZK31V	5005691-6010016
JTM	2007	ZK32V	5005392-6010013
JTM	2007	ZK33V	5005699-6010017
JTM	2007	ZK34V	5005692-5016122
JTM	2007	ZK35V	5005728-5016021
JTM	2008	BD31V	5122515-6089730
JTM	2008	BD32V	5124567-6089718
JTM	2008	BD33V	5124318-6089729
JTM	2008	BD34V	5124315-5215683
JTM	2008	BD35V	5124310-5215906
JTM	2008	BK31V	5040755-6050078
JTM	2008	BK32V	5039902-6050082
JTM	2008	BK33V	5040768-6050066
JTM	2008	BK34V	5040763-5071435
JTM	2008	BK35V	5040804-5071479
JTM	2008	ZD31V	5078027-6081056

COVERED VIN RANGE CONTINUED…

WMI	Year	VDS Range	
		VDS	Range
JTM	2008	ZD32V	5078035-6081048
JTM	2008	ZD33V	5076662-6081084
JTM	2008	ZD34V	5078041-5117037
JTM	2008	ZD35V	5078033-5117144
JTM	2008	ZK31V	5015779-6016058
JTM	2008	ZK32V	5016141-6016055
JTM	2008	ZK33V	5016138-6016053
JTM	2008	ZK34V	5016157-5024038
JTM	2008	ZK35V	5016148-5024022
JTM	2009	BF31V	5000104-D021298
JTM	2009	BF32V	5000105-D021282
JTM	2009	BF33V	5000109-D021303
JTM	2009	BF34V	5000106-5011765
JTM	2009	BF35V	5000103-5017199
JTM	2009	BK31V	5070458-D010236
JTM	2009	BK32V	5057953-D010128
JTM	2009	BK33V	5057681-D010235
JTM	2009	BK34V	5071496-5084167
JTM	2009	BK35V	5071507-5084172
JTM	2009	ZF31V	5000103-D015503
JTM	2009	ZF32V	5000110-D015507
JTM	2009	ZF33V	5000105-D015511
JTM	2009	ZF34V	5000120-5014170
JTM	2009	ZF35V	5000104-5014232
JTM	2009	ZK31V	5023836-D003176
JTM	2009	ZK32V	5023823-D003174
JTM	2009	ZK33V	5024054-D003135
JTM	2009	ZK34V	5024061-5026106
JTM	2009	ZK35V	5024071-5025801
JTM	2010	BF4DV	5017206-D039942
JTM	2010	BK4DV	5084190-D017766
JTM	2010	DF4DV	5017212-D039591

WMI	Year	VDS Range	
		VDS	Range
JTM	2010	DK4DV	5084192-D017767
JTM	2010	EF4DV	5021182-5033749
JTM	2010	EK4DV	5084606-5096973
JTM	2010	JF4DV	5017209-5037237
JTM	2010	JK4DV	5084196-5098439
JTM	2010	KF4DV	5014245-5032167
JTM	2010	KK4DV	5026161-5027285
JTM	2010	RF4DV	5017208-D039590
JTM	2010	RK4DV	5084203-D017704
JTM	2010	WF4DV	5014246-D028128
JTM	2010	WK4DV	5026116-D004794
JTM	2010	XF4DV	5016939-5031934
JTM	2010	XK4DV	5026233-5027247
JTM	2010	YF4DV	5013774-D029440
JTM	2010	YK4DV	5026113-D004796
JTM	2010	ZF4DV	5014243-D029469
JTM	2010	ZK4DV	5026110-D004788
JTM	2011	BF4DV	5037250-5037816
JTM	2011	DF4DV	5037541-D039852
JTM	2011	EF4DV	5037428-5037474
JTM	2011	JF4DV	5036972-5037773
JTM	2011	KF4DV	5032171-5032615
JTM	2011	KK4DV	5027374-5027382
JTM	2011	RF4DV	5037253-5037813
JTM	2011	RK4DV	5098183-5098978
JTM	2011	WF4DV	5032170-5032622
JTM	2011	WK4DV	5027373-5027384
JTM	2011	XF4DV	5032183-5032209
JTM	2011	YF4DV	5032383-5032596
JTM	2011	YK4DV	5027377-D004797
JTM	2011	ZF4DV	5032172-D029470
JTM	2011	ZK4DV	5027376-D004782

NOTE:

- Check the TIS Vehicle Inquiry System to confirm the VIN is involved in this Safety Recall, and that the campaign has not already been completed prior to dealer shipment or by another dealer.
- TMS warranty will not reimburse dealers for repairs conducted on vehicles that are not affected or were completed by another dealer.

V. COMPONENTS

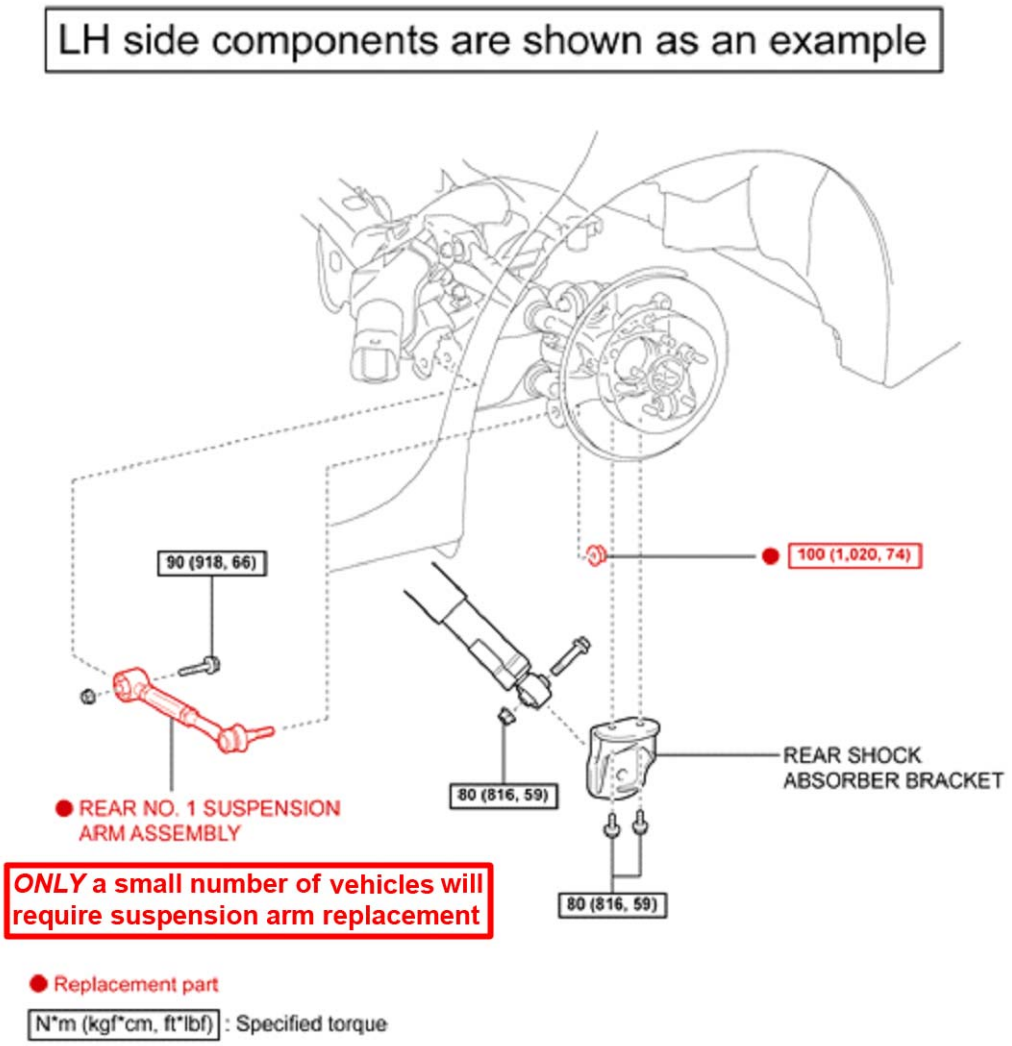

VI. REAR LOWER SUSPENSION ARM No.1 INSPECTION

1. CHECK THE SUSPENSION ARM DESIGN

ADJUSTING *TUBE* DESIGN	ADJUSTING *CAM* DESIGN
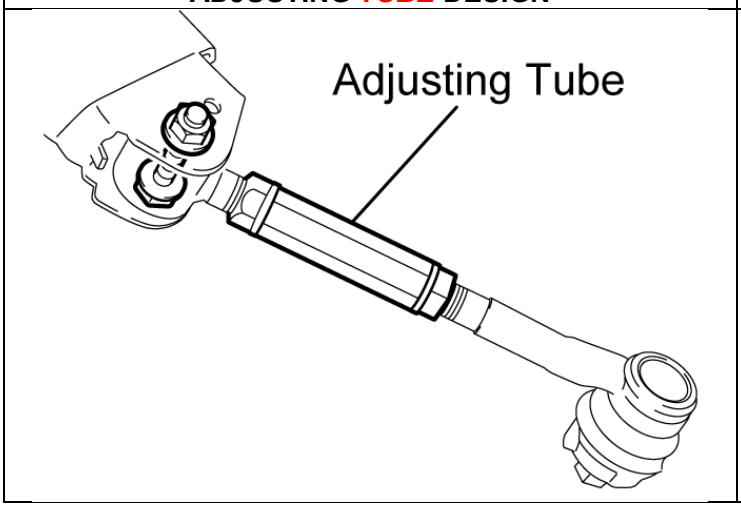	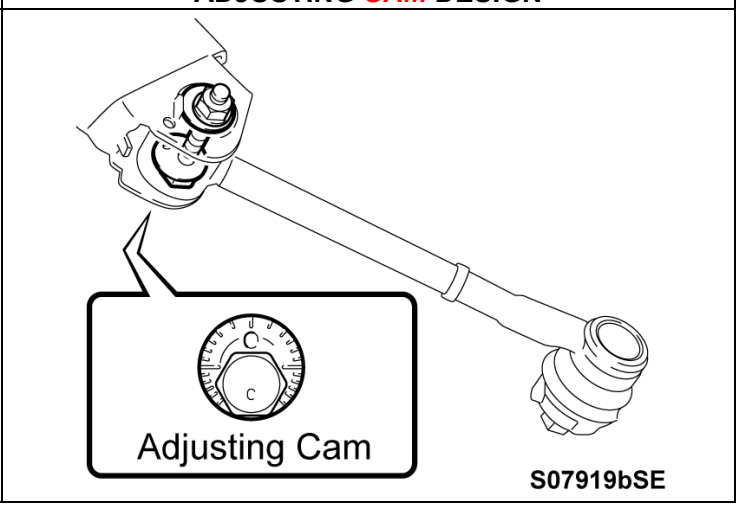

ARM DESIGN	ACTION REQUIRED
Adjusting ***Tube***	Proceed to **STEP 2. CHECK FOR LOOSENESS VISUALLY AND BY HAND**
Adjusting ***Cam***	No further action required. Campaign complete.

2. CHECK FOR LOOSENESS VISUALLY AND BY HAND

a) Check visually and by hand to determine if any looseness is seen or felt in the suspension arm lock nuts or adjusting tube. Check the LH and RH arms.

STOP

- ***ONLY* replace the suspension arm(s) if looseness is found.**
- **The arm(s) not found loose must also be checked using a torque wrench as described in steps 3-5.**

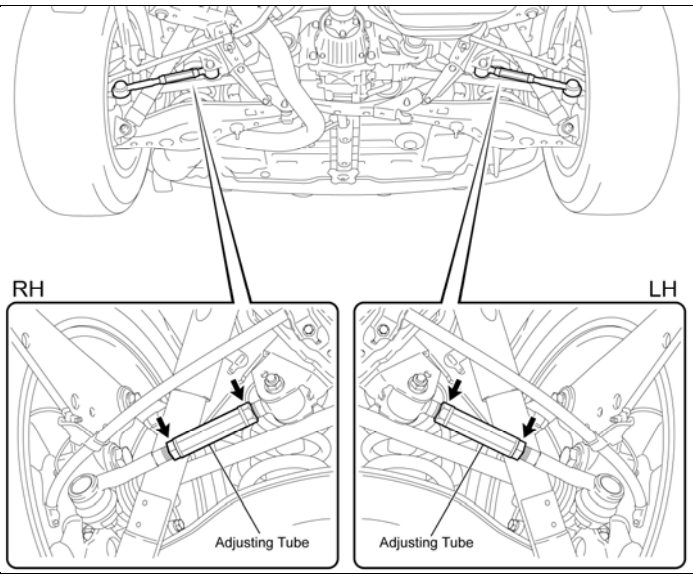

CONDITION	ACTION REQUIRED
Loose	Replace the suspension arm(s) with looseness. Refer to **TIS** for instructions on suspension arm replacement. **NOTE:** • **To prevent stress on the new suspension arm bushing, apply a load to the suspension system to confirm the suspension arm bushing is aligned correctly when tightening by confirming that rear suspension arm No.1 is level with the ground.** • **Suspension arm adjustment and tightening procedure is critical. After replacing the arm, refer to SECTION VII. in these instructions for this procedure.**
NOT Loose	Proceed to **STEP 3. PLACE MATCHMARKS ON SUSPENSION ARM**

3. PLACE MATCH-MARKS ON SUSPENSION ARM

a) Place match-marks across the suspension arms as shown. Mark the arms that were not found loose during **STEP 2.**

b) Use these match-marks to determine if looseness is found in steps 4 and 5 when applying torque.

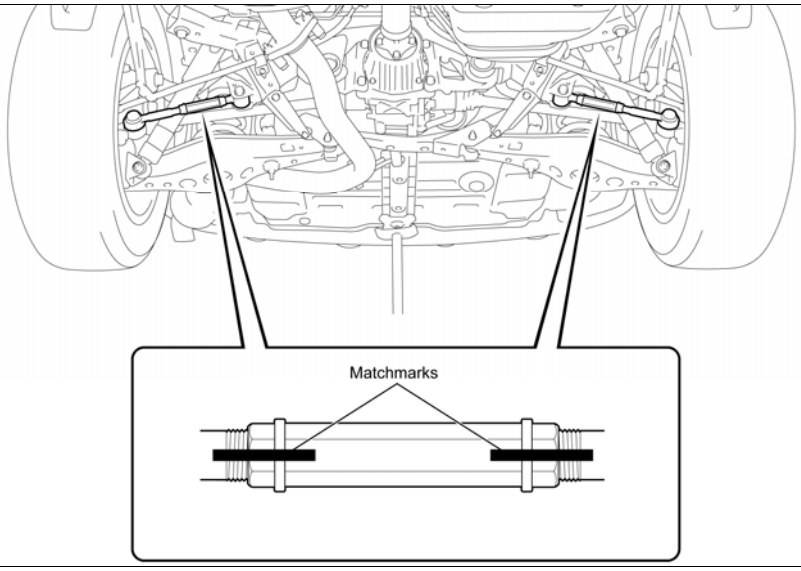

4. CHECK THE ADJUSTING TUBE FOR LOOSENESS WITH TORQUE WRENCH
(This checks inboard lock nut for looseness)

a) Check for looseness in the adjusting tube using a torque wrench.

b) Apply the specified torque to the adjusting tube in both directions. Check the arms that were not previously found loose during **STEP 2.** Inspect the match-marks to see if they become misaligned.

Torque: 15ft. lbf (20N·m)

- **Use a 22mm crowfoot attached to a 15 inch torque wrench. If a tool setup other than specified is used, refer to TIS for torque wrench calculation.**

STOP

- **Confirm the torque wrench is set correctly and that only the specified torque is being applied to the adjusting tube.**
- ***ONLY* replace the suspension arm(s) if looseness is found.**

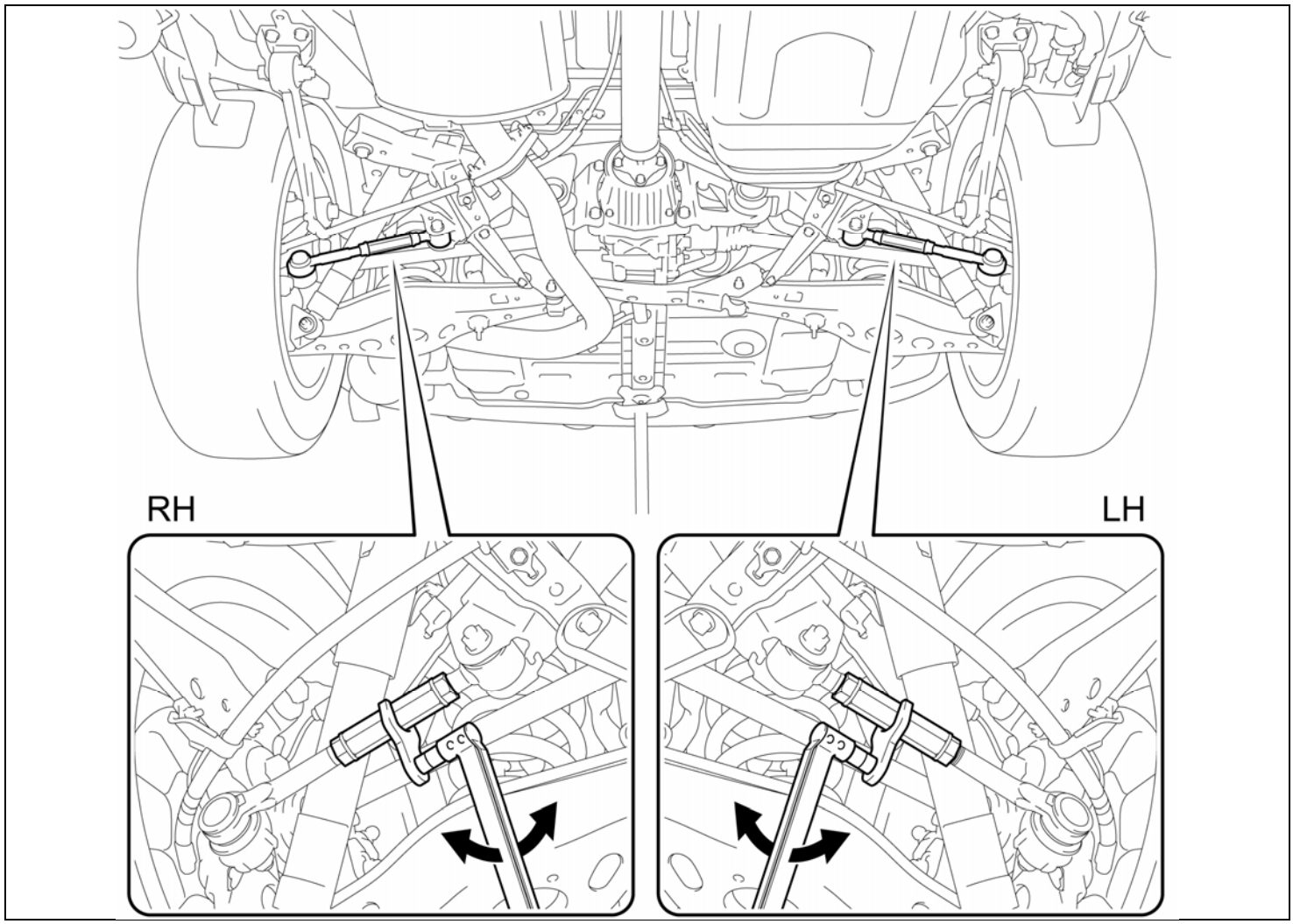

CONDITION	ACTION REQUIRED
Loose	Replace the suspension arm(s) with looseness. Refer to TIS for instructions on suspension arm replacement. **NOTE:** • **To prevent stress on the new suspension arm bushing, apply a load to the suspension system to confirm the suspension arm bushing is aligned correctly when tightening by confirming that rear suspension arm No.1 is level with the ground.** • **Suspension arm adjustment and tightening procedure is critical. After replacing the arm, refer to SECTION VII. in these instructions for this procedure.**
NOT Loose	Proceed to **STEP 5. CHECK THE OUTBOARD LOCK NUT FOR LOOSENESS**

5. CHECK THE OUTBOARD LOCK NUT FOR LOOSENESS (lock nut closest to ball joint)

a) While holding the adjusting tube with a wrench, check for looseness in the outboard lock nut using a torque wrench with a 22mm crowfoot attached.

b) Apply the specified torque to the lock nut in both directions. Check the arms that were not previously found loose during **STEPS 2-4.** Inspect the match-marks to see if they become misaligned.

Torque: 15ft. lbf (20N·m)

- **Use a 22mm crowfoot attached to a 15 inch torque wrench. If a tool setup other than specified is used, refer to TIS for torque wrench calculation.**

STOP

- **Confirm the torque wrench is set correctly and that only the specified torque is being applied to the outboard lock nut.**
- ***ONLY* replace the suspension arm(s) if looseness is found.**

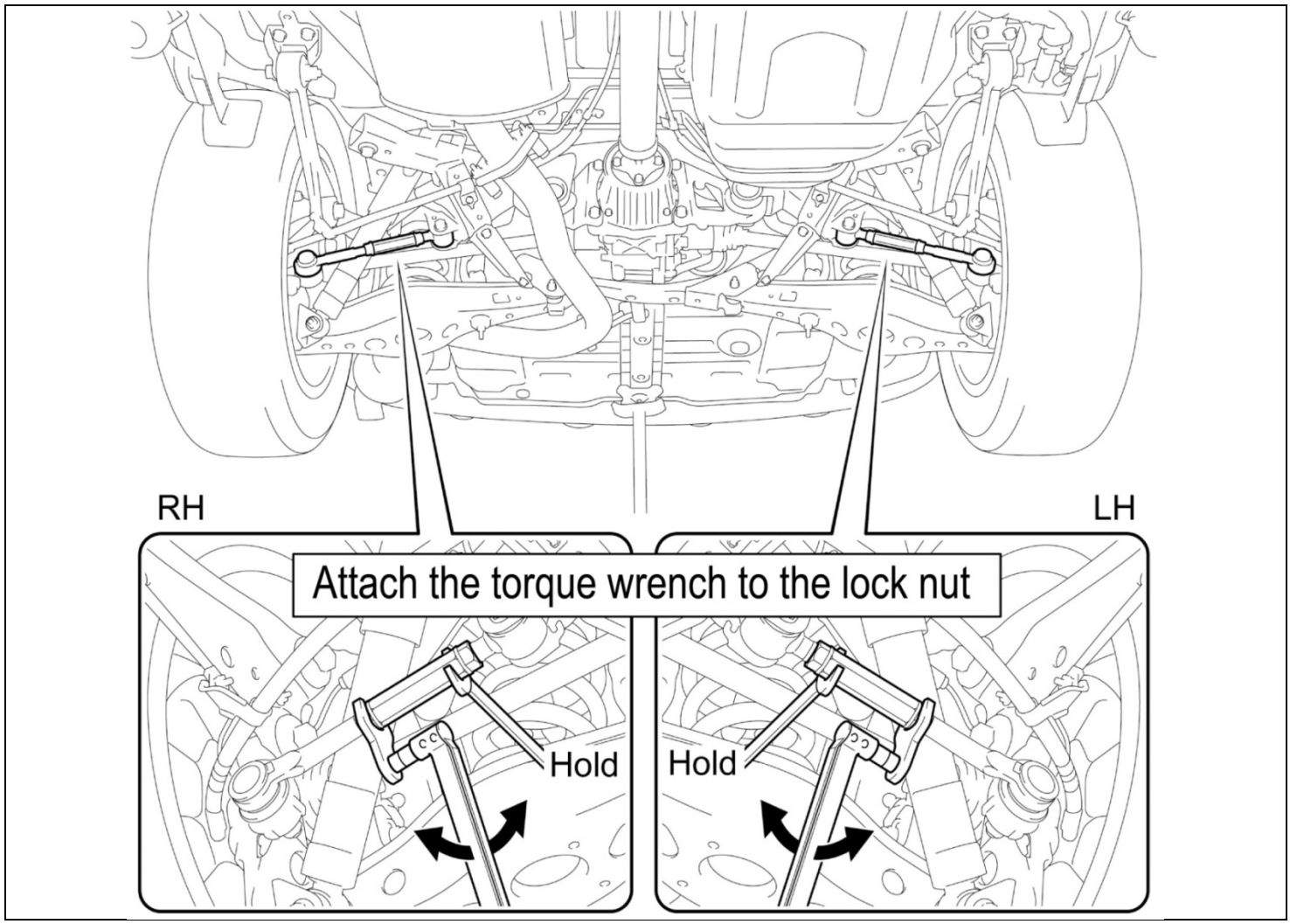

CONDITION	ACTION REQUIRED
Loose	Replace the suspension arm(s) with looseness. Refer to TIS for instructions on suspension arm replacement. **NOTE:** • **To prevent stress on the new suspension arm bushing, apply a load to the suspension system to confirm the suspension arm bushing is aligned correctly when tightening by confirming that rear suspension arm No.1 is level with the ground.** • **Suspension arm adjustment and tightening procedure is critical. After replacing the arm, refer to SECTION VII. in these instructions for this procedure.**
NOT Loose	The interim portion of this campaign is complete. Return the vehicle to the customer

STOP **Only perform this section if the suspension arm was found loose and replaced. If no suspension arm was found loose and replaced, the interim portion of this campaign is complete.**

VII. SUSPENSION ARM ADJUSTMENT AND LOCK NUT TIGHTENING

1. ADJUST REAR TOE

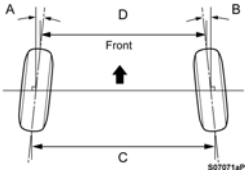

a) Adjust the rear wheel toe using an alignment machine.

Specification:
A+B: 0°10' +/- 0°05' (0.17° +/- 0.09°)
C-D: 2.0 +/- 1.0mm (0.08 +/- 0.04in.)

STOP
- **The tightening procedure for these lock nuts is critical, failure to tighten them in the correct order could cause them to become loose.**
- **Confirm the alignment machine has been updated with the latest software.**

VITAL STEPS

2. TIGHTEN THE LOCK NUTS EXACTLY AS DESCRIBED BELOW

Use a 22mm combination wrench and a 22mm crowfoot attached to a torque wrench
Tightening Sequence: 1. Inboard 2. Outboard 3. Inboard Again
Torque: 41ft. lbf (56N·m)

a) Tighten the inboard lock nut. Hold the adjusting tube steady and tighten the inboard lock nut to the specified torque.

b) Tighten the outboard lock nut. Hold the adjusting tube steady and tighten the outboard lock nut to the specified torque.

c) Tighten the inboard lock nut again. Hold the adjusting tube steady and tighten the inboard lock nut to the specified torque.

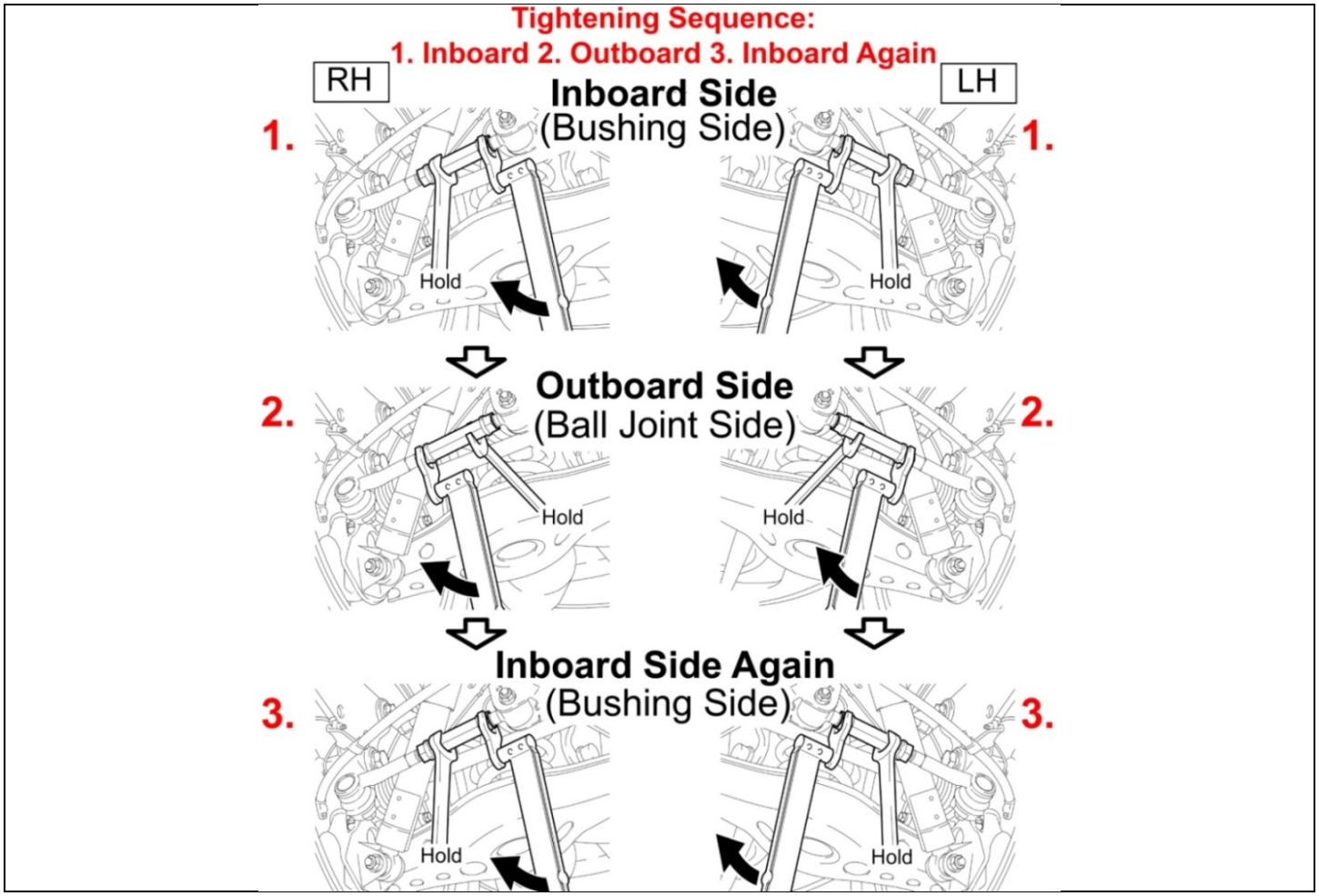

3. TEST DRIVE THE VEHICLE

◄ VERIFY REPAIR QUALITY ►

- **Confirm *ALL* inspection steps are followed *EXACTLY* as described in these instructions**
- **If a suspension arm is replaced, confirm the lock nut tightening procedure is followed *EXACTLY* as described in these instructions**

If you have any questions regarding this update, please contact your regional representative.

VIII. APPENDIX

A. CAMPAIGN DESIGNATION DECODER

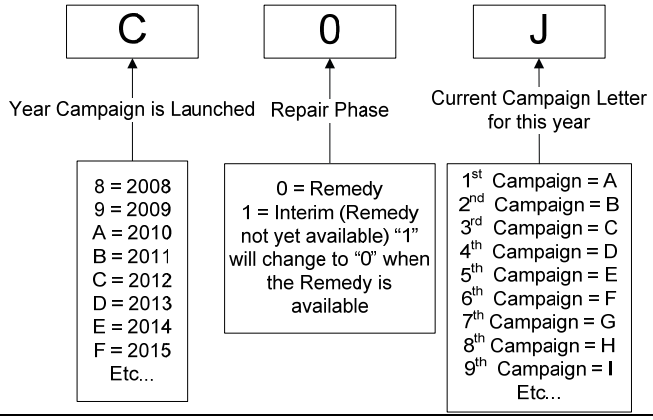

Examples:
A0D = Launched in 2010, Remedy Phase, 4th Campaign Launched in 2010
B1E = Launched in 2011, Interim Phase, 5rd Campaign Launched in 2011
C1C = Launched in 2012, Interim Phase, 3rd Campaign Launched in 2012

B. CAMPAIGN PARTS DISPOSAL

As required by Federal Regulations, please make sure all campaign parts (original parts) removed from the vehicle are disposed of in a manner in which they will not be reused, ***unless requested for parts recovery return.***

Lonnie Peterson / TMS Toyota Customer Services
Product Quality and Service Support, Quality Compliance
September 27, 2012
Approved By: Bob Waltz

To: All Toyota Dealers
From: Toyota Customer Services

Safety Recall C0J – (C1J) *Interim Notification*
2006 to Early 2011 Model Year RAV4 Vehicles
Rear Lower Suspension Arm No.1
********URGENT********

As previously announced, in August, 2012, Toyota filed a Defect Information Report (DIR) with the National Highway Traffic Safety Administration (NHTSA) informing the agency of our intent to conduct a voluntary Safety Recall on 2006 to early 2011 Model Year RAV4 Vehicles.

The purpose of this communication is to inform you that Toyota will be mailing an interim notice to owners of vehicles covered by this Safety Recall.

Condition
In the Rear Suspension Arm No.1 Assembly ("arm"), if the nuts for adjusting the rear wheel alignment are not tightened following the proper procedure and torque specification when vehicle alignment service is performed, backlash may develop at the thread portion of the arm (shaft and turn-buckle), followed by formation of rust. If this occurs, threads may wear, causing the arm to separate, which could result in the loss of vehicle control.

Interim Owner Notification
As communicated in the Preliminary Notification in August, Toyota is currently preparing the remedy for this Safety Recall. In the meantime, we are communicating the ***interim*** actions:

- To assure transparency with owners, Toyota will mail an ***interim*** owner notification in late September, 2012.
- The ***interim*** owner notification letter will advise owners: (1) of this safety recall, (2) of the fact they will receive a future notice once the remedy is available, and (3) Interim Inspection:* What to do if the driver experience an abnormal noise from the rear of the vehicle or if they have previously had a 4-wheel alignment performed.
  **Please note that the Interim Inspection does not complete this Safety Recall. Customers will still need to return to the dealer to have the remedy completed once it becomes available.*

- A Dealer Letter containing additional information has been posted on TIS.
- ***Please refer to TIS for vehicle applicability and additional information.***

Customer Contacts
- A Q&A has been attached for your use in the event you receive a customer contact. If a customer has further questions, please direct the inquiry to the Toyota Customer Experience Center at 1-800-331-4331.
- If a customer contacts a dealership and has experienced the condition described or has previously had a 4-wheel alignment performed, dealerships are requested to assist them by setting up an appointment to perform the interim inspection and diagnose the condition. If the condition is verified, please assist the customer by repairing the vehicle at no charge.

The Toyota Customer Experience Center can be reached at 1-888-270-9371 Monday through Friday, 5:00 am to 6:00 pm, or Saturday 7:00 am through 4:00 pm Pacific Time.