THIS LETTER IS A FOLLOW-UP TO AN EARLIER NOTICE. MCI URGES YOU TO MAKE ARRANGEMENTS TO REPAIR YOUR AFFECTED VEHICLE(S) AS SOON AS POSSIBLE.

MOTOR COACH INDUSTRIES

December 21, 2011

«Customer_Name»
ATTENTION: TECH SERVICE DEPT/MAINT
«Address»
«Address_2»
«City», «State» «Zip»
«ctry»

SUBJECT: <u>SAFETY RECALL OF TAG AXLE TIE ROD LOCK CLAMPS</u>
Ref.: **NHTSA # 09V-350**
MCI Service Bulletin 331B

Attention Owner:

This notice is sent to you in accordance with the National Traffic and Motor Vehicle Safety Act.

Motor Coach Industries, Inc. ("MCI") has decided that a defect exists which relates to motor vehicle safety on the tag axle locking system on certain 2009 D4500/4505 model coaches equipped with the Meritor FH 946 14,000 Lb. rated steerable tag axle. Due to insufficient clamping force of the cylinder lock plate, it may move from its normal set position, which in turn could result in the tag axle not automatically locking, or locking with the wheels not in a straight-ahead position. If the tag axle does not lock above 20 MPH, there is a loss of lateral force control of the tag axle that can affect the steering of the vehicle. Also, if the tag axle does not lock above 20 MPH, during a turn the rear of the vehicle will swing further out in the opposite direction of the turn than anticipated, and could result in the coach striking another vehicle in an adjacent lane of traffic or otherwise causing an accident. If the tag axle does lock but with the locking plate in an incorrect position due to its movement on the tie rod, the wheels would not be in a straight-ahead position and could result in potential tire failure or premature tire wear. Please see the enclosed MCI Service Bulletin 331B for further information.

The vehicles that are subject to this notice are the following 2009 MCI D4500/4505 model coaches:

58892	**58949-58950**	**58953-58979**	**58990**	**58992-59000**
59002	**59004-59011**	**59013**	**59015**	**59017-59018**

1700 EAST GOLF ROAD, SUITE 300
SCHAUMBURG, ILLINOIS 60173
847-285-2000 PHONE
866-624-2622 TOLL FREE
WWW.MCICOACH.COM

MCI is conducting a recall to provide replacement clamps that do not have paint on the clamping surfaces, and to clean, repair, and adjust as necessary the tag axle tie rod and cylinder plate. Please see the enclosed MCI Service Bulletin 331B, which describes in further detail the. The parts and repair services will be done at no cost to you.

MCI records indicate that you are the owner or operator of the following vehicle(s) included in this recall, and that the recall work on your vehicle(s) has not yet been performed:
«Unit_Numbers»

MCI strongly urges you to have the recall replacement and other procedures performed on your vehicle(s) as quickly as possible.

You may contact the MCI Customer Service Line at 1-800-241-2947 to make arrangements to have your vehicle(s) repaired at an authorized MCI service center. Submittal of MCI Warranty Claim Forms may be completed on MCI's website at http://fleetsupportiw.mcicoach.com/iwarranty/signon (click on Customer Care System), or a photocopy of the Warranty Claim Form found in the Warranty Manual can be mailed / faxed to the MCI Warranty Department. Please refer to Service Bulletin 331B, and your OWNER LIMITED WARRANTY MANUAL, for more detailed information.

If you have any questions about this recall campaign, you may contact the MCI Customer Service Line at 1-800-241-2947.

After contacting MCI Customer Service, if you are still unable to have the safety defect remedied without charge and within a reasonable time, you may submit a complaint:

For the U.S.:

The Administrator
National Highway Traffic Safety Administration
1200 New Jersey Avenue, SE.,
Washington, DC 20590;
or call the toll-free Vehicle Safety Hotline at 1-888-327-4236; (TTY: 1-800-424-9153); or go to http://www.safercar.gov.

If you are the lessor of the vehicle(s) identified above, Federal law requires that you forward this notice by first class mail to the most recent lessee(s) known to you, within ten days of your receipt of this notice.

If you have sold or otherwise transferred the vehicle(s) identified above, please contact the MCI Customer Service Line at 1-800-241-2947 with all of the information you have regarding the current owner/operator of the vehicle(s), so that we can ensure that the vehicles are inspected and repaired as necessary.

1700 EAST GOLF ROAD, SUITE 300
SCHAUMBURG, ILLINOIS 60173
847-285-2000 PHONE
866-624-2622 TOLL FREE
WWW.MCICOACH.COM

If you had your vehicle repaired or inspected for this condition prior to receipt of this notice and incurred any costs, you may be eligible for reimbursement. Please contact the MCI Customer Service Line at 1-800-241-2947 for further information in that regard.

We regret the inconvenience this may cause you, but urge you to have your vehicle(s) inspected and repaired as necessary as soon as possible for your added safety and satisfaction.

Sincerely,

Motor Coach Industries
Warranty Department

Enclosure: MCI Service Bulletin 331B

1700 EAST GOLF ROAD, SUITE 300
SCHAUMBURG, ILLINOIS 60173
847-285-2000 PHONE
866-624-2622 TOLL FREE
WWW.MCICOACH.COM

Service Bulletin No. 331B

MODEL	TYPE	SECTION/GROUP	DATE
D4500 / D4505 Series Coaches	Field Change Program	12 – Suspension	Sept. 11, 2009

SUBJECT: **TAG AXLE TIE ROD LOCK CLAMPS REPLACEMENT**

CONDITIONS:

THIS BULLETIN SUPERSEDES SERVICE BULLETIN 331 IN ITS ENTIRETY.

Ref. NHTSA Recall No.: 09V – 350

Defect and Cause:

The steerable tag axle is a self – steering system that caster steers the tag axle while the coach is operating below approximately 20 MPH, which improves the vehicle's turning radius. There is a tag axle locking system located on the front of the tag axle assembly. When the coach speed exceeds approximately 20 MPH, the axle automatically locks the wheels in a straight – ahead position by an air – operated locking pin that locks the tag axle tie rod to the tag axle, thereby eliminating the self – steering system. The locking occurs when the locking pin descends into and engages the air cylinder lock plate, which in turn is clamped to the tag axle tie rod. The location of the cylinder lock plate on the tie rod is set so that when the tag axle is locked, the wheels are in a straight – ahead position. Due to insufficient clamping force of the cylinder lock plate, it may move from its normal set position, which in turn could result in the tag axle not automatically locking, or locking with the wheels not in a straight – ahead position. If the tag axle does not lock above 20 MPH, there is a loss of lateral force control of the tag axle that can affect the steering of the vehicle. Also, if the tag axle does not lock above 20 MPH, during a turn the rear of the vehicle will swing further out in the opposite direction of the turn than anticipated, and could result in the coach striking another vehicle in an adjacent lane of traffic or otherwise causing an accident. If the tag axle does lock but with the locking plate in an incorrect position due to its movement on the tie rod, the wheels would not be in a straight – ahead position and could result in potential tire failure or premature tire wear.

The cause of the defect is insufficient clamping force, due to paint on the clamping surfaces, between the tie rod and the cylinder locking plate on the tie rod with the Meritor FH 946 14000 lb. rated tag axle. This allowed relative movement of the cylinder locking plate on the tie rod, which resulted in the tag steering system either not automatically locking above approximately 20 MPH, or locking with the tag wheels not in a straight – ahead position.

Corrective Action:

MCI strongly encourages customers to replace the clamps and remove all traces of paint and grease from the tie rod and cylinder lock plate casting mating surfaces.

As a result, MCI advises that owners of D4500 / D4505 model coaches between the range of, and including, unit numbers 58892, 58949, 58950, 58953 to 58979, 58990, 58992 to 59000, 59002, 59004 to 59011, 59013, 59015, 59017 and 59018 should implement the specified steps in this procedure as soon as possible.

Parts

Qty.	New P/N	Description
2	12-04-1153	Clamp
4	19-1-1439	Capscrew
8	19-2-284	Washer, Flat
4	19-3-366	Nut, 1/2 – 20 UNF
a/r	21-7212-18	Locktite

Service Procedure:

General notes

Read this entire procedure before beginning work.

Use Safe Shop Practices At All Times.

1. Drive the coach over a pit, or use a lift to access the tag axle locking mechanism.
2. Unlock the tag axle locking mechanism cylinder pin by making sure the tag lock switch is in the ”OFF” position, then shutting the engine down by turning the ignition to the ”OFF” position, and then positioning the ignition to the ”ON” position.
3. Turn the main battery disconnect switch to the OFF position.
4. Dump tag air. Remove the air from the front and rear air suspension by pulling the drain valve ring on all front and rear auxiliary air suspension tanks (located behind the tag axle in the rear, behind the front curbside tire and ahead of the front roadside tire).

WARNING

If the steps in this procedure are performed over a pit, apply the park brake and chock both sides of the tires.

If the steps in this procedure are performed with the coach on a lift, raise coach to desired height. Position jackstands at the front and rear frame support points, according to Figure 1, to ensure that the coach is securely supported before attempting work underneath the coach.

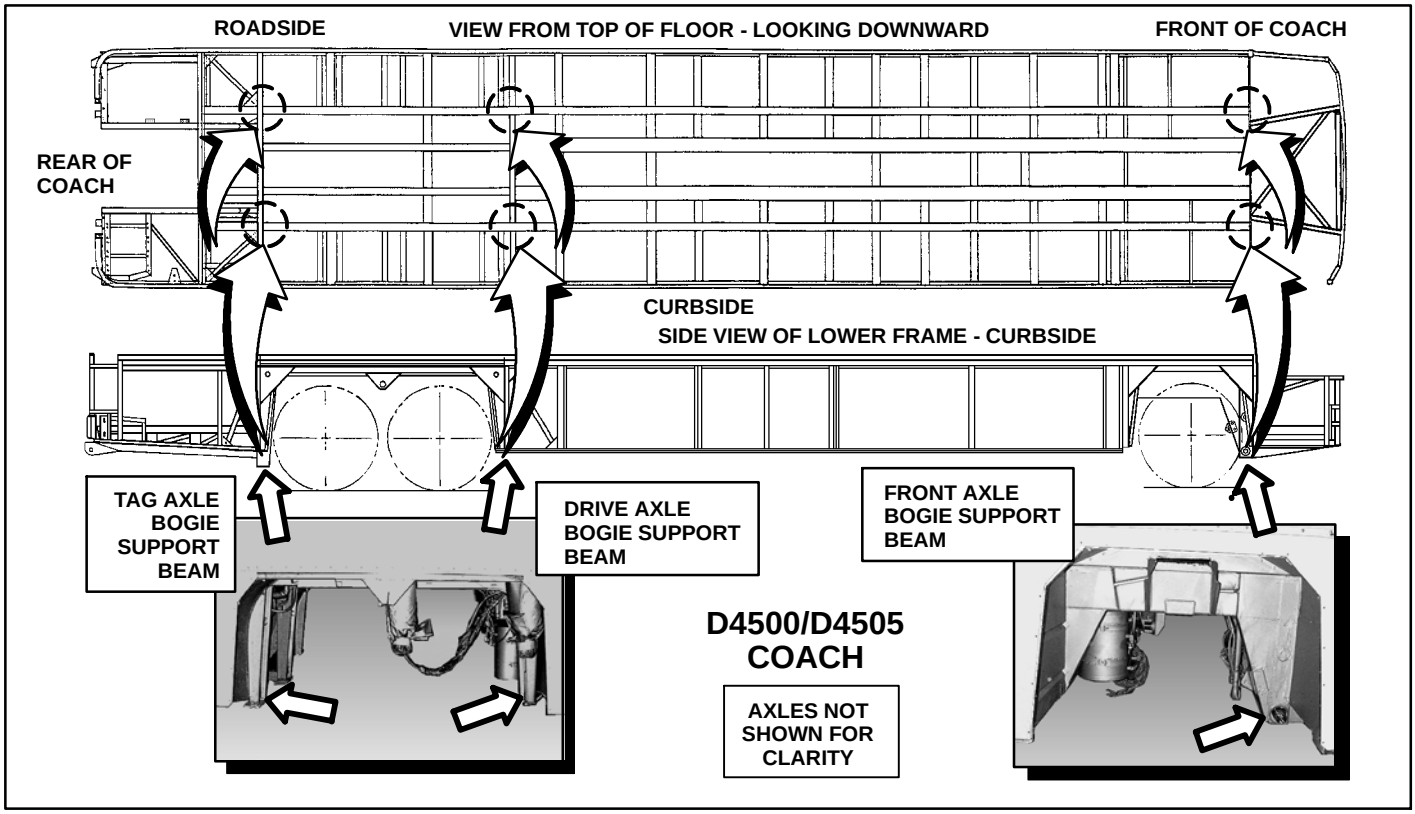

Figure 1 Underframe Jackstand Support Points (Section 3G / Maintenance Manual)

WARNING

Refer to Section 3F / Lifting and Towing, in the D4500 Maintenance Manual, for the basic rules, procedures and safety precautions that must be followed before a coach is to be lifted.

5. Locate the tag axle locking mechanism (refer to Figure 2).

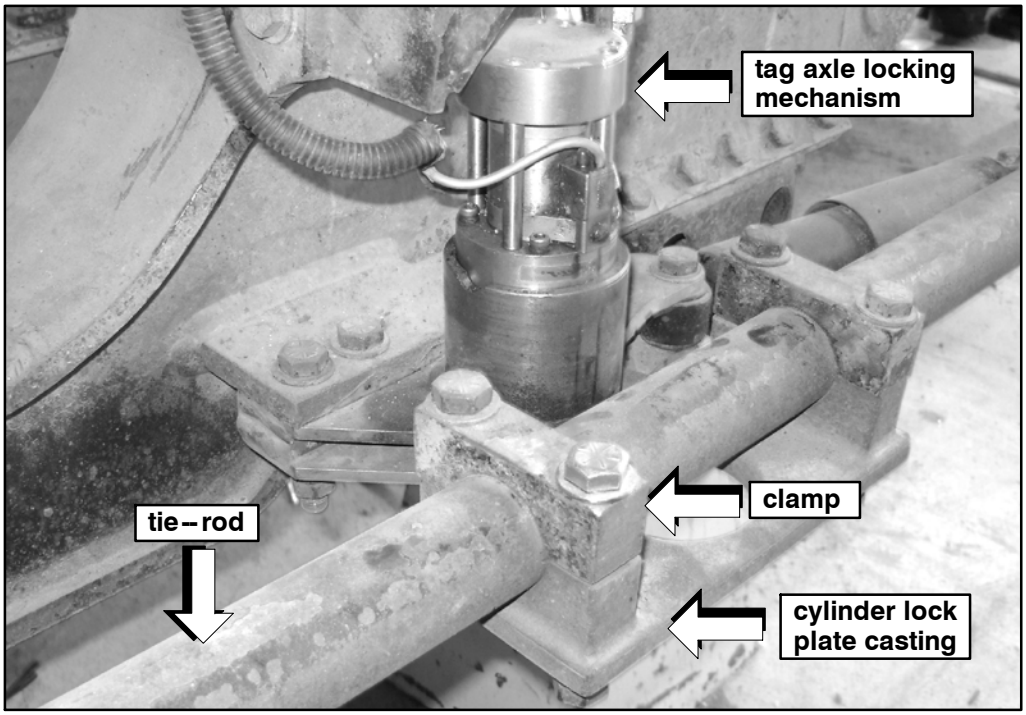

Figure 2.

6. Using a clean cloth, remove any dirt or grease from the tie rod and clamps (refer to Figure 2). Visually inspect the tie rod for scuff or drag marks indicating that the tie rod has moved within the lock clamps.

NOTICE

Upon inspection, if scuff or drag marks are present indicating tie rod movement within the lock clamps, loosen the clamp hardware and re–orientate the tie rod / clamp relationship by aligning the beginning of the scuff marks on the tie rod with the edge of the applicable clamp.

Upon inspection, if scuff marks are not present, proceed to Step 7.

7. Using masking tape, mark each side of each clamp to indicate the tie rod / clamp relationship for re–installation at a later step in this procedure (refer to Figure 3).

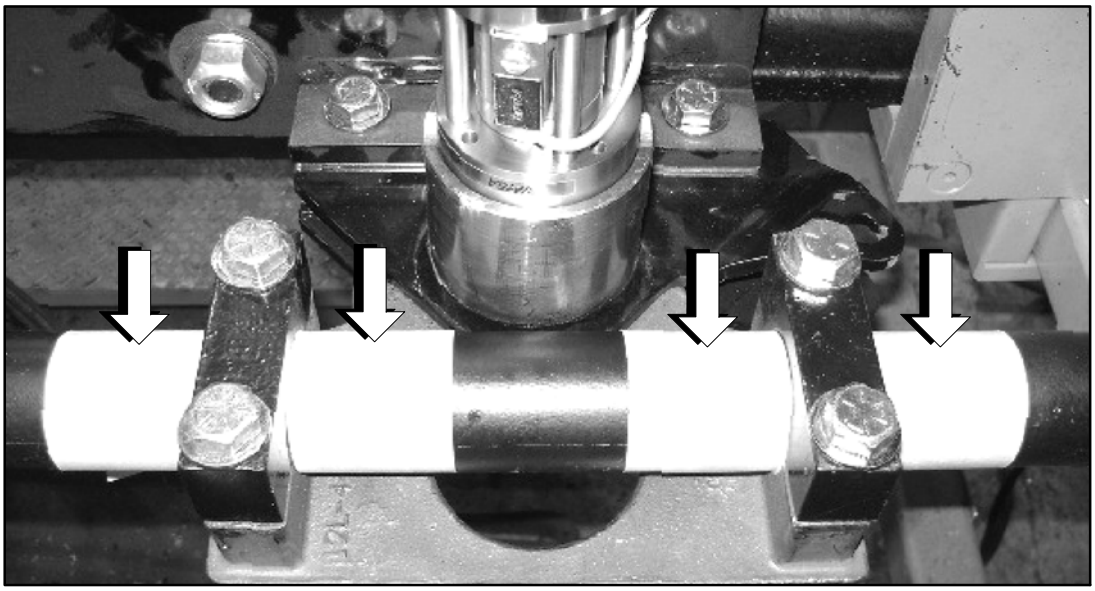

Figure 3.

8. Remove and discard the mounting hardware and clamps.
9. Loosen the cylinder lock plate casting capscrews (refer to Figure 2), to slide out the cylinder lock plate casting. Lower the cylinder lock plate casting one–half (1/2) the diameter of the tie rod to access the bottom of the tie rod and the lock casting (refer to Figure 4).

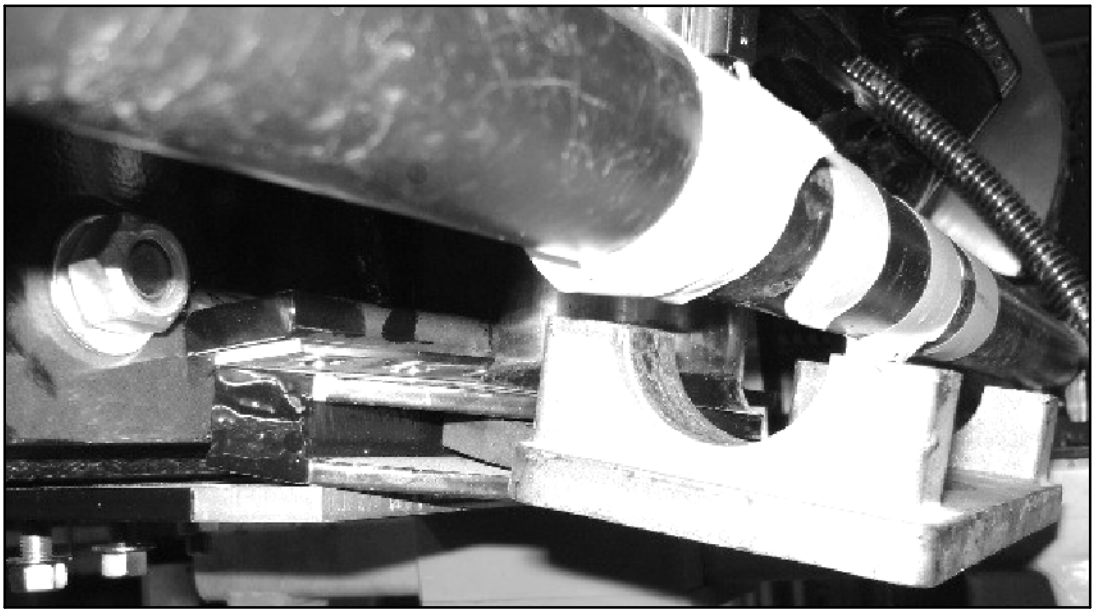

Figure 4.

10. Using a scraper and cloth, remove all traces of graphite coating, paint and grease from the cylinder lock plate casting and the tie rod (refer to Figure 5).

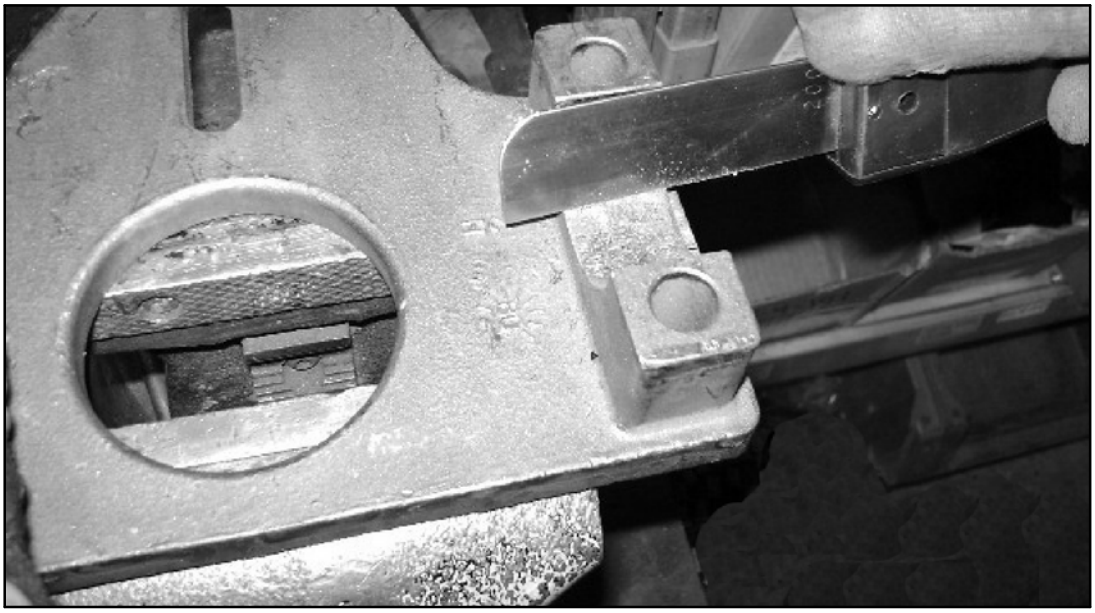

Figure 5. Reference photo.

11. Re–assemble lock casting into the lock cylinder plate (refer to Step 9.).
12. Apply loctite, p/n 21-7512-5, to the threads of the capscrews, p/n 19-1-1439.
13. Using the new hardware provided, align and install new clamps, p/n 12-04-1153, in between the masking on the tie rod (refer to Figures 3 and 6).
14. Line up the lock plate with the lock cylinder. Snug up all bolts to secure the clamps in position.
15. Turn coach ignition to the OFF position, locking the cylinder into the plate.

NOTICE

To achieve proper clamp load, the gap must be maintained between the upper and lower clamps (refer to Figure 6).

16. Torque the lock cylinder plate capscrews to 85–90 lbs.-ft. Torque nut, p/n 19-3-366, to 70–80 lbs.-ft.

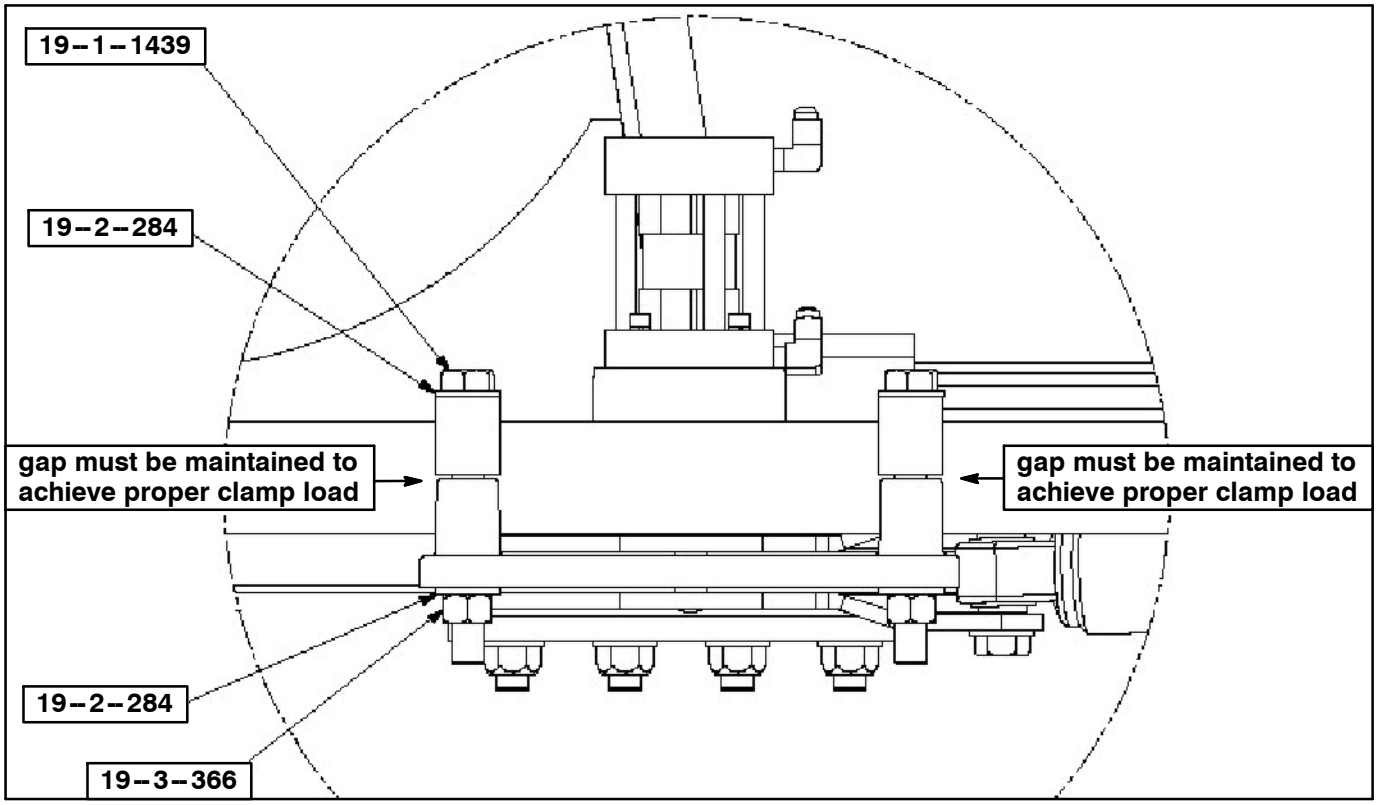

Figure 6.

NOTICE

Upon inspection, if scuff marks were present indicating tie–rod movement within the clamps, the coach will require aligning the tag axle scrub angle.

Procedure complete.

Mail or fax the completed warranty claim form to MCI's warranty department, or photocopy and mail it to:

MCI Fleet Support
Attn: Warranty Department
7001 Universal Coach Drive
Louisville, KY 40258
Fax Number 1-800–360–8886

to receive credit for the hours used to complete this task. Contact the MCI Fleet Support Technical Center at 1-800-241-2947 for any further information.

Field Change Program Conditions:

The parts required for this change will be supplied without charge.

ONLY ONE (1) CLAIM CAN BE FILED AGAINST THE COACH VIN, SB 331 OR SB 331B.

A labor allowance of 0.7 hours will be granted against claim SB 331B.1, for the procedure of inspection, removal of clamps, removal graphite and grease and installation of new clamps.

A labor allowance of 1.2 hours will be granted against claim SB 331B.2, for the procedure of inspection, removal of clamps, removal graphite and grease, installation of new clamps and aligning the tag axle scrub angle to the center-point of the drive axle.

This labor allowance will be credited to your MCI Fleet Support Parts Account on receipt of a "Warranty Claim Form" as detailed in your Owner Warranty manual.

Motor Coach apologizes for any inconvenience resulting from this campaign, but urges you to implement this change as soon as possible.

Sincerely,

Motor Coach Industries
U.S. and Canadian Service Departments.