TECHNICAL INSTRUCTIONS

FOR

LIMITED SERVICE CAMPAIGN (LSC) A0F

2000 THROUGH 2003 MODEL YEAR TUNDRA FRAME REPLACEMENT

I. OPERATION FLOWCHART

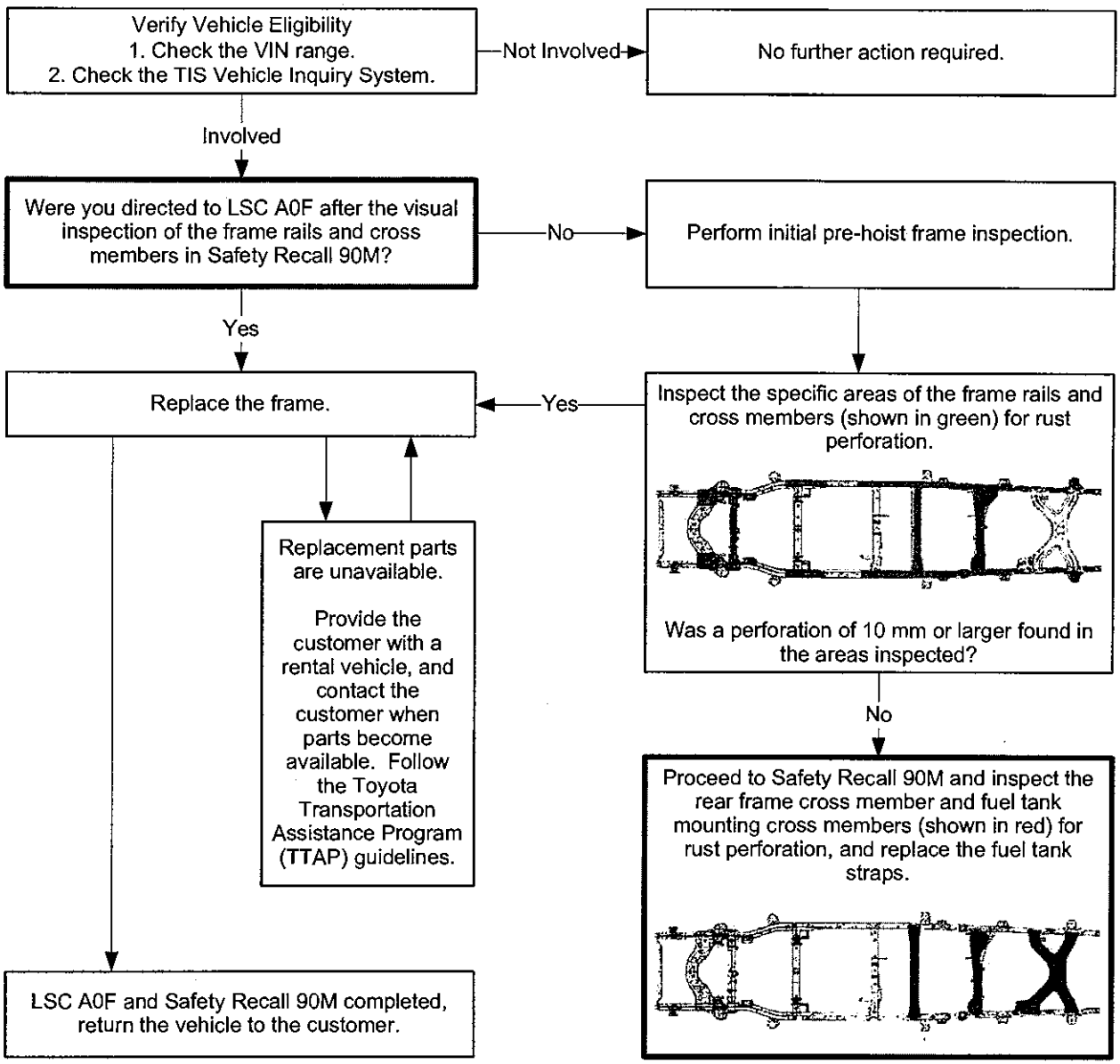

II. PREPARATION

A. TOOLS & EQUIPMENT

- A/C service equipment
- Alignment rack
- Brake bleeder
- Engine Hanger
  - 5VZ-FE Engine for vehicles produced on or before August 2002
    - 12282-62050 – Engine hanger no. 2 (Qty: 1)
    - 90080-11443 – Bolt (Qty: 1)
  - 5VZ-FE Engine for vehicles produced after August 2002
    - 12282-62070 – Engine hanger no. 2 (Qty: 1)
    - 90080-11443 – Bolt (Qty: 1)
- Engine hoist (Qty: 2) or Hydraulic mini crane (Qty 2)
- Engine sling
- Protective eyewear
- Protective gloves
- Ratcheting tie down strap (2 in X 27 ft, minimum work load capacity: 3,000 lbs)
- Special Service Tools (SST)
  - 07110-58060 – Air conditioner service tool set ***or*** Commercially available air conditioning manifold gauge set
  - 09325-40010 – Transmission oil plug
  - 09610-20012 – Pit man arm puller
  - 09617-24011 – A component of SST 09612-24014, Steering housing overhaul Tool Kit or commercially available 22 mm Crowfoot wrench
  - 09628-62011 – Ball joint puller
  - 09709-29018 – LSPV gauge set
  - 09922-10010-01 – Variable open wrench
- Standard hand tools
- Techstream
- Torque wrench
- Torx® T55H tamper resistant socket

B. SUPPLIES

- ATF D-II or DEXRON® III (DEXRON® II) – As needed
- Hypoid gear oil API GL-5 SAE 75W-90 – 1.3 Quarts
- R134a refrigerant – As needed
- Toyota DOT 3 brake fluid – 3 pints
- Toyota long life coolant – 2 gallons
- Vinyl tape

C. PARTS

To assist dealers in determining the correct part number(s) to order, a website has been set up to look up part numbers by VIN. Please go to http://lsc-aof.imagespm.info/ (also linked through TIS), enter the VIN, and the correct part numbers to order will be displayed. ***The website is for part(s) application reference only and will not order the part, nor will it confirm campaign completion status.***

- The parts will need to be ordered through the Dealer Daily Parts system.
- ETAs for the parts will be available via the normal system.
- Frame ETAs will be made available on the Dealer Daily website, in the MAC reference area.

An illustration of the parts replaced and their location(s) have been provided. Please reference the ***"Illustration Name"*** and ***"Page"*** columns in the parts tables below.

Individual Parts:

Part Number	Part Description	Quantity	Illustration Name	Page
04000-2310C	Frame, Sub-Assy	1	Frame & Misc Parts	13
04000-2320C	Frame, Sub-Assy	1	Frame & Misc Parts	13
04000-2330C	Frame, Sub-Assy	1	Frame & Misc Parts	13
04000-2340C	Frame, Sub-Assy	1	Frame & Misc Parts	13
04000-2350C	Frame, Sub-Assy	1	Frame & Misc Parts	13
04000-2360C	Frame, Sub-Assy	1	Frame & Misc Parts	13
04000-2370C	Frame, Sub-Assy	1	Frame & Misc Parts	13
04000-2380C	Frame, Sub-Assy	1	Frame & Misc Parts	13
04000-2390C	Frame, Sub-Assy	1	Frame & Misc Parts	13
04000-2410C	Frame, Sub-Assy	1	Frame & Misc Parts	13
04000-2420C	Frame, Sub-Assy	1	Frame & Misc Parts	13
04000-2430C	Frame, Sub-Assy	1	Frame & Misc Parts	13
04000-2440C	Frame, Sub-Assy	1	Frame & Misc Parts	13
04000-2450C	Frame, Sub-Assy	1	Frame & Misc Parts	13
04000-2460C	Frame, Sub-Assy	1	Frame & Misc Parts	13
04000-2470C	Frame, Sub-Assy	1	Frame & Misc Parts	13
04000-2480C	Frame, Sub-Assy	1	Frame & Misc Parts	13
04000-2490C	Frame, Sub-Assy	1	Frame & Misc Parts	13
04000-2510C	Frame, Sub-Assy	1	Frame & Misc Parts	13
04000-2520C	Frame, Sub-Assy	1	Frame & Misc Parts	13
04000-2530C	Frame, Sub-Assy	1	Frame & Misc Parts	13
04000-2540C	Frame, Sub-Assy	1	Frame & Misc Parts	13
04000-2550C	Frame, Sub-Assy	1	Frame & Misc Parts	13
04000-2560C	Frame, Sub-Assy	1	Frame & Misc Parts	13
04000-2570C	Frame, Sub-Assy	1	Frame & Misc Parts	13
04000-2580C	Frame, Sub-Assy	1	Frame & Misc Parts	13
04000-2590C	Frame, Sub-Assy	1	Frame & Misc Parts	13
04000-2610C	Frame, Sub-Assy	1	Frame & Misc Parts	13
04000-2620C	Frame, Sub-Assy	1	Frame & Misc Parts	13
04000-2630C	Frame, Sub-Assy	1	Frame & Misc Parts	13
04000-2660C	Frame, Sub-Assy	1	Frame & Misc Parts	13
04000-2670C	Frame, Sub-Assy	1	Frame & Misc Parts	13
04000-2680C	Frame, Sub-Assy	1	Frame & Misc Parts	13

Individual Parts (Continued):

Part Number	Part Description	Quantity	Illustration Name	Page
04483-0C030	Shackle Kit, Rear Spring	2	Rear Suspension	13
12157-10010	Gasket, Front Differential Filler Plug	1	Front Differential	20
16492-21050	Packing (For Radiator Drain Cock)	1	Radiator	25
18495-38020	Retainer, Exhaust Pipe	2	Exhaust System	23
18495-76010	Retainer, Exhaust Pipe	1	Exhaust System	23
23232-41081	Gasket (For Fuel Pump Hose)	1	Fuel System	22
43425-04020	Ring, Shaft Snap (For Front Drive Inner Shaft Outer)	2	Front Driveshaft	20
47322-0C011	Tube, Rear Brake, No.2	1	Brake Tubes	15
47322-0C012	Tube, Rear Brake, No.2	1	Brake Tubes	15
47323-0C011	Tube, Rear Brake, No.3	1	Brake Tubes	15-16
47323-0C012	Tube, Rear Brake, No.3	1	Brake Tubes	15-16
47361-0C011	Tube, Rear Brake, No.10	1	Brake Tubes	15-16
47361-0C012	Tube, Rear Brake, No.10	1	Brake Tubes	15-16
77601-34030	Fuel Tank Strap, No. 1	1	Fuel Tank	24
77601-34040	Fuel Tank Strap, No. 1	1	Fuel Tank	24
77603-34060	Fuel Tank Strap, No. 2	1	Fuel Tank	24
77603-34070	Fuel Tank Strap, No. 2	1	Fuel Tank	24
90080-43033	Gasket, Exhaust Pipe	1	Exhaust System	23
90080-43034	Gasket, Exhaust Pipe	2	Exhaust System	23
90430-12026	Gasket (For Pulsation Damper Hose)	2	Fuel System	22
90430-24003	Gasket, Front Differential Drain Plug	1	Front Differential	20
90917-06057	Gasket, Exhaust Pipe	1	Exhaust System	23
90917-06083	Gasket, Exhaust Pipe	2	Exhaust System	23
95381-04045	Cotter Pin	2	Front Driveshaft	20
96711-19007	Packing (For Radiator Drain Cock)	1	Radiator	25

Parts Kits:

Part Number	Part Description	Quantity
04009-49134	Parts Kit No. 1 – Common Replacement Kit A-1	1

The kit listed above includes the following parts:

Part Number	Part Description	Quantity	Illustration Name	Page
47353-35110	Bracket, Flexible Hose, No. 3	1	Brake Tubes	15-16
47354-35100	Bracket, Flexible Hose, No. 4	1	Brake Tubes	15-16
47931-34020	Bracket, Load sensing Valve	1	LSPV	19
47937-60010	Plate, Load Sensing Valve Set	1	LSPV	19
48409-34020	Cam Sub-Assy, Front Suspension Toe Adjust	2	Front Suspension	14
48409-34030	Cam Sub-Assy, Front Suspension Toe Adjust, No. 2	2	Front Suspension	14
48452-35020	Plate, Front Suspension Toe Adjust, No. 2	4	Front Suspension	14
48824-34020	Bracket, Front Stabilizer No. 1 RH	1	Front Suspension	14
48829-34010	Bracket, Front Stabilizer No. 1 LH	1	Front Suspension	14
77285-34030	Clamp, Fuel Tube, No. 1	4	Fuel Tubes	17
77285-34040	Clamp, Fuel Tube, No. 1	1	Fuel Tubes	17
77285-34050	Clamp, Fuel Tube, No. 1	1	Fuel Tubes	17
77285-34060	Clamp, Fuel Tube, No. 1	1	Fuel Tubes	17
77285-34070	Clamp, Fuel Tube, No. 1	2	Fuel Tubes	17
77285-34080	Clamp, Fuel Tube, No. 1	1	Fuel Tubes	17
77775-34010	Guide, Canister Outlet	1	Fuel Tubes	17
82666-35200	Holder, Connector	2	ABS	21
82711-1E320	Support, Wiring Harness	1	Wire Harness Clamps	19
82711-1E360	Support, Wiring Harness	1	Wire Harness Clamps	19
82711-21020	Support, Wiring Harness	1	Wire Harness Clamps	19
82711-26380	Support, Wiring Harness	15	Wire Harness Clamps	19
82711-3A640	Support, Wiring Harness	1	Wire Harness Clamps	19
82711-3F050	Support, Wiring Harness	3	Wire Harness Clamps	19
89515-35030	Clamp	2	ABS	21
90099-14120	O-Ring	1	Air Conditioning	24
90099-14121	O-Ring	1	Air Conditioning	24
90119-12311	Bolt	4	Rear Bumper	25
90159-60440	Screw	4	Frame & Misc Parts	13
90178-10024	Nut	4	Front Bumper	25
90179-06314	Nut	2	Front Bumper	25
90179-08054	Nut	1	AT Shift Cable	25
90179-08063	Nut	2	Front Bumper	25
90179-08256	Nut	2	Front Suspension	14
90179-10071	Nut	4	Engine Mounting	21
90179-14019	Nut	8	Rear Suspension	13
90179-14039	Nut	6	Rear Suspension	13
90201-09019	Washer	1	AT Shift Cable	25
90201-14025	Washer	6	Rear Suspension	13
90201-15012	Washer	8	Rear Suspension	13
90252-03015	Cotter Pin	2	Front Suspension	14
90467-13076	Clip	2	Bed Mounting	14
90468-08035	Clip	3	Brake Tubes	15-16
90904-12066	Way, No. 2 (for front brake tube)	1	Brake Tubes	15-16
90904-12067	Way, No. 3 (for front brake tube)	1	Brake Tubes	15-16
90904-12068	Way (for front brake tube)	1	Brake Tubes	15-16
90949-01B59	Clamp	1	Brake Tubes	15-16
90949-01B60	Clamp, Brake Tube, No. 6	5	Brake Tubes	15-16
90949-01B61	Clamp, Brake Tube, No. 7	1	Brake Tubes	15-16
91621-B0816	Bolt	5	Brake Tubes	16
95381-03225	Cotter Pin	2	Power Steering	21

Parts Kits (Continued):

Part Number	Part Description	Quantity
04009-49234	Parts Kit No. 2 – Common Replacement Kit A-2	1

The kit listed above includes the following parts:

Part Number	Part Description	Quantity	Illustration Name	Page
47353-35110	Bracket, Flexible Hose, No. 3	1	Brake Tubes	15-16
47354-35100	Bracket, Flexible Hose, No. 4	1	Brake Tubes	15-16
47931-34020	Bracket, Load sensing Valve	1	LSPV	19
47937-60010	Plate, Load Sensing Valve Set	1	LSPV	19
48409-34020	Cam Sub-Assy, Front Suspension Toe Adjust	2	Front Suspension	14
48409-34030	Cam Sub-Assy, Front Suspension Toe Adjust, No. 2	2	Front Suspension	14
48452-35020	Plate, Front Suspension Toe Adjust, No. 2	4	Front Suspension	14
48824-34030	Bracket, Front Stabilizer No. 1 RH	1	Front Suspension	14
48829-34020	Bracket, Front Stabilizer No. 1 LH	1	Front Suspension	14
77285-34031	Clamp, Fuel Tube, No. 1	4	Fuel Tubes	17
77285-34041	Clamp, Fuel Tube, No. 1	1	Fuel Tubes	17
77285-34051	Clamp, Fuel Tube, No. 1	1	Fuel Tubes	17
77285-34060	Clamp, Fuel Tube, No. 1	1	Fuel Tubes	17
77285-34071	Clamp, Fuel Tube, No. 1	2	Fuel Tubes	17
77285-34080	Clamp, Fuel Tube, No. 1	1	Fuel Tubes	17
77775-34010	Guide, Canister Outlet	1	Fuel Tubes	17
82666-35200	Holder, Connector	2	ABS	21
82711-1E320	Support, Wiring Harness	1	Wire Harness Clamps	19
82711-1E360	Support, Wiring Harness	1	Wire Harness Clamps	19
82711-21020	Support, Wiring Harness	1	Wire Harness Clamps	19
82711-26380	Support, Wiring Harness	15	Wire Harness Clamps	19
82711-3A640	Support, Wiring Harness	1	Wire Harness Clamps	19
82711-3F050	Support, Wiring Harness	3	Wire Harness Clamps	19
89515-35030	Clamp	2	ABS	21
90099-14120	O-Ring	1	Air Conditioning	24
90099-14121	O-Ring	1	Air Conditioning	24
90119-12311	Bolt	4	Rear Bumper	25
90159-60440	Screw	4	Frame & Misc Parts	13
90178-10024	Nut	4	Front Bumper	25
90179-06314	Nut	2	Front Bumper	25
90179-08054	Nut	1	AT Shift Cable	25
90179-08063	Nut	2	Front Bumper	25
90179-10071	Nut	4	Engine Mounting	21
90179-14019	Nut	8	Rear Suspension	13
90179-14039	Nut	6	Rear Suspension	13
90182-10004	Nut	2	Front Suspension	14
90201-09019	Washer	1	AT Shift Cable	25
90201-14025	Washer	6	Rear Suspension	13
90201-15012	Washer	8	Rear Suspension	13
90252-03015	Cotter Pin	2	Front Suspension	14
90467-13076	Clip	2	Bed Mounting	14
90468-08035	Clip	3	Brake Tubes	15-16
90904-12066	Way, No. 2 (for front brake tube)	1	Brake Tubes	15-16
90904-12067	Way, No. 3 (for front brake tube)	1	Brake Tubes	15-16
90904-12068	Way (for front brake tube)	1	Brake Tubes	15-16
90949-01C06	Clamp, Brake Tube, No. 6	5	Brake Tubes	15-16
90949-01C32	Clamp	1	Brake Tubes	15-16
90949-01C33	Clamp, Brake Tube, No. 7	1	Brake Tubes	15-16
91621-B0816	Bolt	5	Brake Tubes	16
95381-03225	Cotter Pin	2	Power Steering	21

Parts Kits (Continued):

Part Number	Part Description	Quantity
04009-49334	Parts Kit No. 3 – Common Replacement Kit A-3	1

The kit listed above includes the following parts:

Part Number	Part Description	Quantity	Illustration Name	Page
47353-35110	Bracket, Flexible Hose, No. 3	1	Brake Tubes	15
47354-35100	Bracket, Flexible Hose, No. 4	1	Brake Tubes	15
47931-34020	Bracket, Load sensing Valve	1	LSPV	19
47937-60010	Plate, Load Sensing Valve Set	1	LSPV	19
48409-34020	Cam Sub-Assy, Front Suspension Toe Adjust	2	Front Suspension	14
48409-34030	Cam Sub-Assy, Front Suspension Toe Adjust, No. 2	2	Front Suspension	14
48452-35020	Plate, Front Suspension Toe Adjust, No. 2	4	Front Suspension	14
48824-34030	Bracket, Front Stabilizer No. 1 RH	1	Front Suspension	14
48829-34020	Bracket, Front Stabilizer No. 1 LH	1	Front Suspension	14
77285-34031	Clamp, Fuel Tube, No. 1	4	Fuel Tubes	18
77285-34060	Clamp, Fuel Tube, No. 1	1	Fuel Tubes	18
77285-34071	Clamp, Fuel Tube, No. 1	2	Fuel Tubes	18
77285-34080	Clamp, Fuel Tube, No. 1	1	Fuel Tubes	18
77285-34260	Clamp, Fuel Tube, No. 1	1	Fuel Tubes	18
77285-34270	Clamp, Fuel Tube, No. 1	1	Fuel Tubes	18
77285-34280	Clamp, Fuel Tube, No. 1	2	Fuel Tubes	18
77285-34290	Clamp, Fuel Tube, No. 1	1	Fuel Tubes	18
77285-34300	Clamp, Fuel Tube, No. 1	1	Fuel Tubes	18
77285-34310	Clamp, Fuel Tube, No. 1	1	Fuel Tubes	18
82666-35200	Holder, Connector	2	ABS	21
82711-16830	Support, Wiring Harness	3	Wire Harness Clamps	19
82711-26380	Support, Wiring Harness	15	Wire Harness Clamps	19
82711-3A640	Support, Wiring Harness	1	Wire Harness Clamps	19
82711-3F050	Support, Wiring Harness	3	Wire Harness Clamps	19
89515-35030	Clamp	2	ABS	21
90099-14120	O-Ring	1	Air Conditioning	24
90099-14121	O-Ring	1	Air Conditioning	24
90119-12311	Bolt	4	Rear Bumper	25
90159-60440	Screw	4	Frame & Misc Parts	13
90178-10024	Nut	4	Front Bumper	25
90179-08054	Nut	1	AT Shift Cable	25
90179-10071	Nut	4	Engine Mounting	21
90179-14019	Nut	8	Rear Suspension	13
90179-14039	Nut	6	Rear Suspension	13
90182-10004	Nut	2	Front Suspension	14
90201-09019	Washer	1	AT Shift Cable	25
90201-14025	Washer	6	Rear Suspension	13
90201-15012	Washer	8	Rear Suspension	13
90252-03015	Cotter Pin	2	Front Suspension	14
90467-13076	Clip	2	Bed Mounting	14
90468-08035	Clip	3	Brake Tubes	15
90904-12066	Way, No. 2 (for front brake tube)	1	Brake Tubes	15
90904-12067	Way, No. 3 (for front brake tube)	1	Brake Tubes	15
90904-12068	Way (for front brake tube)	1	Brake Tubes	15
90949-01C06	Clamp, Brake Tube, No. 6	5	Brake Tubes	15
90949-01C32	Clamp	1	Brake Tubes	15
90949-01C33	Clamp, Brake Tube, No. 7	1	Brake Tubes	15
95381-03225	Cotter Pin	2	Power Steering	21

Parts Kits (Continued):

Part Number	Part Description	Quantity
04009-4960C	Parts Kit No. 4 – Common Replacement Kit B-1	1

The kit listed above includes the following parts:

Part Number	Part Description	Quantity	Illustration Name	Page
52145-0C010	Bracket, Front Bumper Side Mounting, RH	1	Front Bumper	25
52146-0C010	Bracket, Front Bumper Side Mounting, LH	1	Front Bumper	25
90080-11180	Bolt	3	LSPV	19
90080-11180	Bolt	4	Spare Tire Carrier	14
90080-11180	Bolt	6	Fuel Tubes	17
90080-11275	Bolt	2	Front Suspension	14
90080-11373	Bolt	9	Frame & Misc Parts	13
90080-11375	Bolt	2	Front Suspension	14
90080-11376	Bolt	2	Fuel Tank	24
90080-11387	Bolt	4	Engine Mounting	21
90080-11410	Bolt	2	Front Suspension	14
90080-11555	Bolt	2	Power Steering	21
90105-14132	Bolt	6	Rear Suspension	13
90119-A0049	Bolt	4	Front Bumper	25
90119-A0073	Bolt	6	Rear Bumper	25

Part Number	Part Description	Quantity
04009-4970C	Parts Kit No. 5 – Common Replacement Kit B-2	1

The kit listed above includes the following parts:

Part Number	Part Description	Quantity	Illustration Name	Page
52145-0C010	Bracket, Front Bumper Side Mounting, RH	1	Front Bumper	25
52146-0C010	Bracket, Front Bumper Side Mounting, LH	1	Front Bumper	25
90080-11180	Bolt	3	LSPV	19
90080-11180	Bolt	4	Spare Tire Carrier	14
90080-11180	Bolt	6	Fuel Tubes	17
90080-11275	Bolt	2	Front Suspension	14
90080-11373	Bolt	9	Frame & Misc Parts	13
90080-11376	Bolt	2	Fuel Tank	24
90080-11387	Bolt	4	Engine Mounting	21
90080-11410	Bolt	2	Front Suspension	14
90080-11482	Bolt	2	Front Suspension	14
90080-11555	Bolt	2	Power Steering	21
90105-14132	Bolt	6	Rear Suspension	13
90119-A0049	Bolt	4	Front Bumper	25
90119-A0073	Bolt	6	Rear Bumper	25

Parts Kits (Continued):

Part Number	Part Description	Quantity
04009-4980C	Parts Kit No. 6 – Common Replacement Kit B-3	1

The kit listed above includes the following parts:

Part Number	Part Description	Quantity	Illustration Name	Page
52145-0C010	Bracket, Front Bumper Side Mounting, RH	1	Front Bumper	25
52146-0C010	Bracket, Front Bumper Side Mounting, LH	1	Front Bumper	25
90080-11180	Bolt	3	LSPV	19
90080-11180	Bolt	4	Spare Tire Carrier	14
90080-11180	Bolt	10	Fuel Tubes	18
90080-11275	Bolt	2	Front Suspension	14
90080-11373	Bolt	9	Frame & Misc Parts	13
90080-11387	Bolt	4	Engine Mounting	21
90080-11410	Bolt	2	Front Suspension	14
90080-11482	Bolt	2	Front Suspension	14
90080-11555	Bolt	2	Power Steering	21
90105-14132	Bolt	6	Rear Suspension	13
90119-A0049	Bolt	4	Front Bumper	25
90119-A0073	Bolt	6	Rear Bumper	25
90119-A0077	Bolt	2	Fuel Tank	24

Part Number	Part Description	Quantity
04009-5010C	Parts Kit No. 7 – Brake Tube Kit 1 (without ABS for 00 MY)	1

The kit listed above includes the following parts:

Part Number	Part Description	Quantity	Illustration Name	Page
47312-0C011	Tube, Front Brake, No.2	1	Brake Tubes	16
47314-0C011	Tube, Front Brake, No.4	1	Brake Tubes	16
47316-0C011	Tube, Front Brake, No.6	1	Brake Tubes	16
47317-0C011	Tube, Front Brake, No.7	1	Brake Tubes	16
47319-0C021	Tube, Front Brake, No.9	1	Brake Tubes	16
47321-0C011	Tube, Rear Brake, No.1	1	Brake Tubes	16
47324-0C011	Tube, Rear Brake, No.4	1	Brake Tubes	16

Part Number	Part Description	Quantity
04009-5020C	Parts Kit No. 8 – Brake Tube Kit 2 (without ABS for 01-02 MY)	1

The kit listed above includes the following parts:

Part Number	Part Description	Quantity	Illustration Name	Page
47312-0C011	Tube, Front Brake, No.2	1	Brake Tubes	16
47314-0C011	Tube, Front Brake, No.4	1	Brake Tubes	16
47316-0C011	Tube, Front Brake, No.6	1	Brake Tubes	16
47317-0C011	Tube, Front Brake, No.7	1	Brake Tubes	16
47319-0C021	Tube, Front Brake, No.9	1	Brake Tubes	16
47321-0C011	Tube, Rear Brake, No.1	1	Brake Tubes	16
47324-0C012	Tube, Rear Brake, No.4	1	Brake Tubes	16

Parts Kits (Continued):

Part Number	Part Description	Quantity
04009-5030C	Parts Kit No. 9 – Brake Tube Kit 3 (with ABS for 00 MY)	1

The kit listed above includes the following parts:

Part Number	Part Description	Quantity	Illustration Name	Page
47312-0C011	Tube, Front Brake, No.2	1	Brake Tubes	15
47314-0C011	Tube, Front Brake, No.4	1	Brake Tubes	15
47316-0C011	Tube, Front Brake, No.6	1	Brake Tubes	15
47317-0C011	Tube, Front Brake, No.7	1	Brake Tubes	15
47319-0C021	Tube, Front Brake, No.9	1	Brake Tubes	15
47321-0C011	Tube, Rear Brake, No.1	1	Brake Tubes	15
47324-0C012	Tube, Rear Brake, No.4	1	Brake Tubes	15

Part Number	Part Description	Quantity
04009-5040C	Parts Kit No. 10 – Brake Tube Kit 4 (with ABS for 01-02 MY)	1

The kit listed above includes the following parts:

Part Number	Part Description	Quantity	Illustration Name	Page
47312-0C011	Tube, Front Brake, No.2	1	Brake Tubes	15
47314-0C011	Tube, Front Brake, No.4	1	Brake Tubes	15
47316-0C011	Tube, Front Brake, No.6	1	Brake Tubes	15
47317-0C011	Tube, Front Brake, No.7	1	Brake Tubes	15
47319-0C021	Tube, Front Brake, No.9	1	Brake Tubes	15
47321-0C011	Tube, Rear Brake, No.1	1	Brake Tubes	15
47324-0C012	Tube, Rear Brake, No.4	1	Brake Tubes	15

Part Number	Part Description	Quantity
04009-5050C	Parts Kit No. 11 – Brake Tube Kit 5 (with ABS for 03 MY)	1

The kit listed above includes the following parts:

Part Number	Part Description	Quantity	Illustration Name	Page
47312-0C011	Tube, Front Brake, No.2	1	Brake Tubes	15
47314-0C011	Tube, Front Brake, No.4	1	Brake Tubes	15
47316-0C011	Tube, Front Brake, No.6	1	Brake Tubes	15
47317-0C011	Tube, Front Brake, No.7	1	Brake Tubes	15
47319-0C021	Tube, Front Brake, No.9	1	Brake Tubes	15
47321-0C011	Tube, Rear Brake, No.1	1	Brake Tubes	15
47324-0C012	Tube, Rear Brake, No.4	1	Brake Tubes	15

Parts Kits (Continued):

Part Number	Part Description	Quantity
04009-49434	Parts Kit No. 12 – LSPV 1 (without ABS)	1

The kit listed above includes the following parts:

Part Number	Part Description	Quantity	Illustration Name	Page
47910-34060	Valve Assy, Load Sensing Proportioning	1	LSPV	19
47920-34040	Spring Assy, Load Sensing	1	LSPV	19
47926-35010	Spacer, Load Sensing Valve	1	LSPV	19
90467-31110	Clip (For Load Sensing Valve Boot)	1	LSPV	19

Part Number	Part Description	Quantity
04008-28104	Parts Kit No. 13 – LSPV 2 (with ABS)	1

The kit listed above includes the following parts:

Part Number	Part Description	Quantity	Illustration Name	Page
47910-34070	Valve Assy, Load Sensing Proportioning	1	LSPV	19
47920-34040	Spring Assy, Load Sensing	1	LSPV	19
47926-35010	Spacer, Load Sensing Valve	1	LSPV	19
90467-31110	Clip (For Load Sensing Valve Boot)	1	LSPV	19

D. PARTS ILLUSTARTION

Frame & Misc Parts

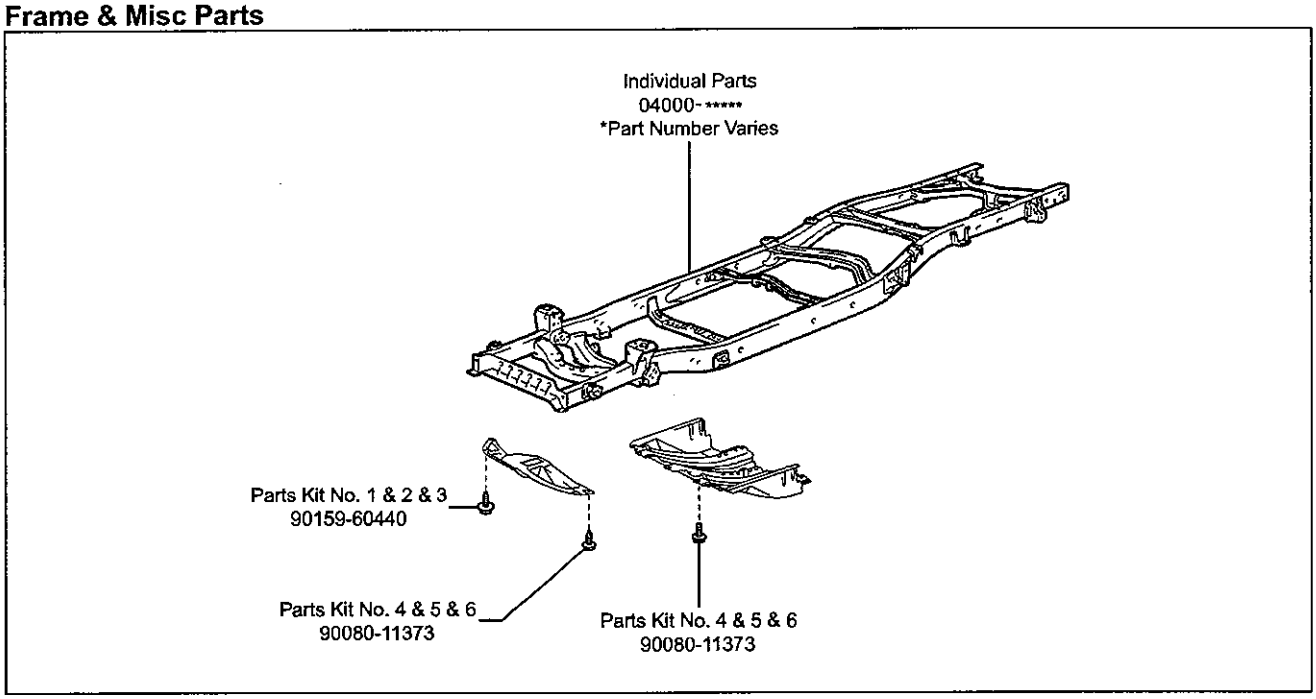

Rear Suspension

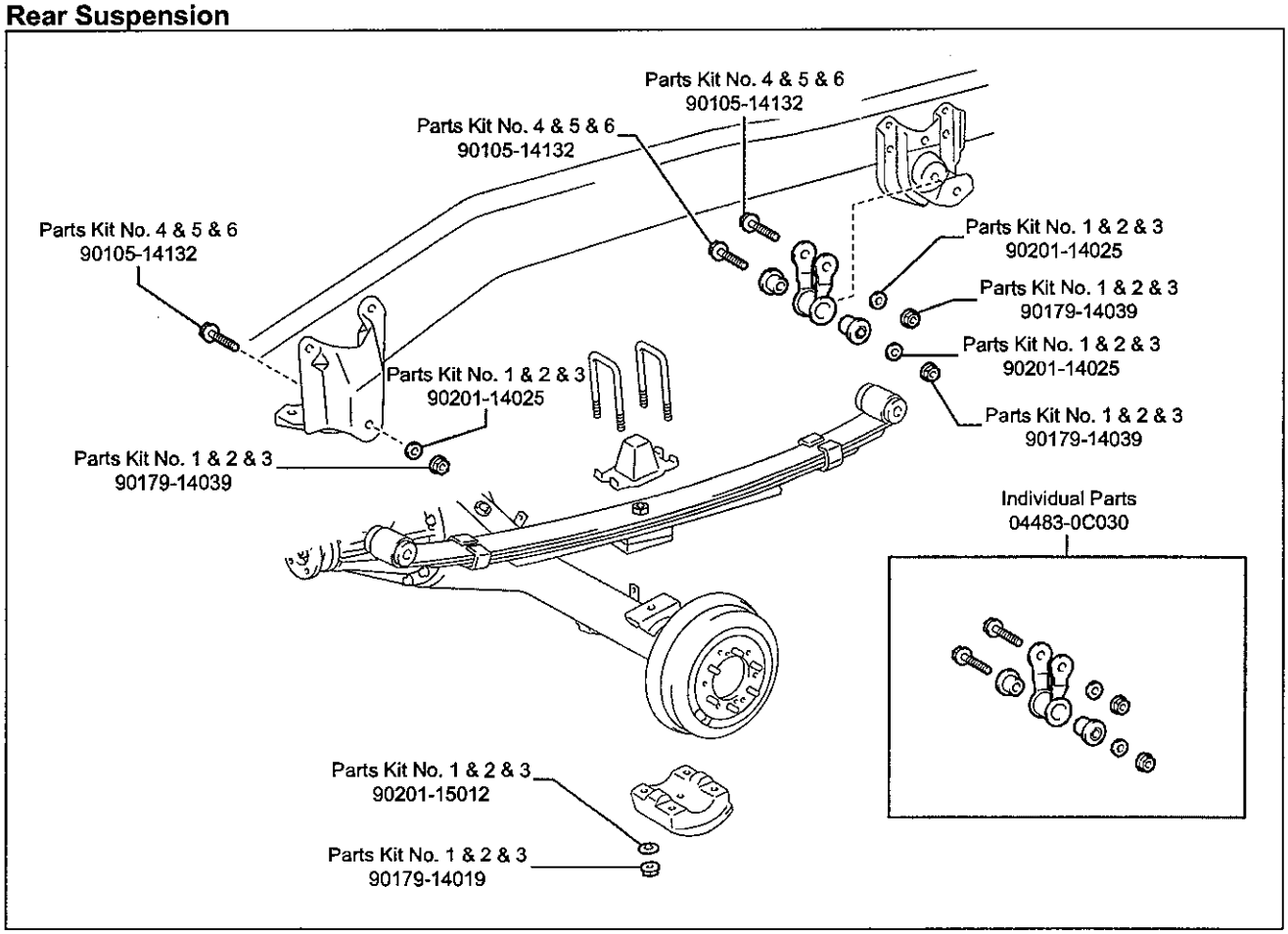

Front Suspension

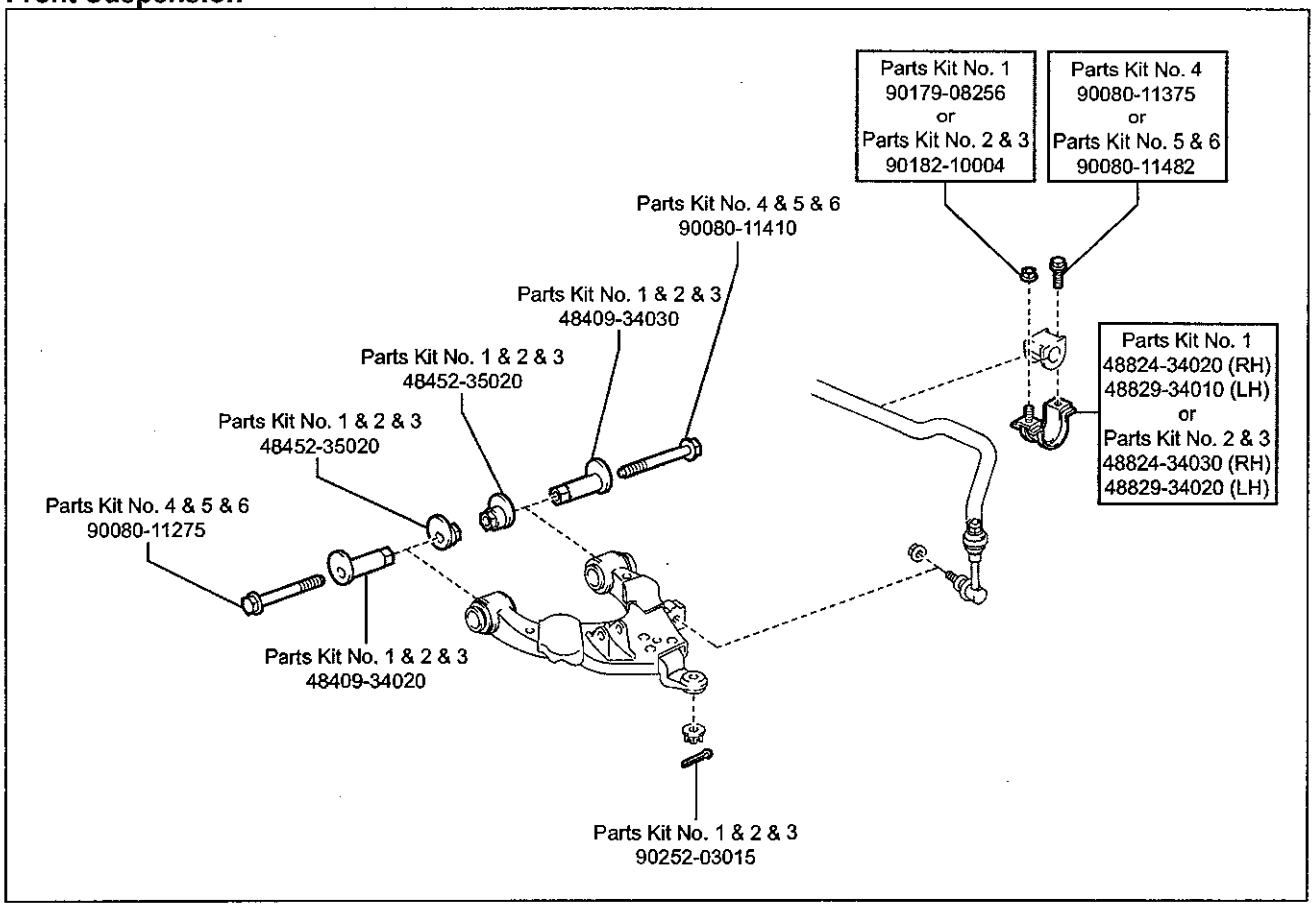

Bed Mounting

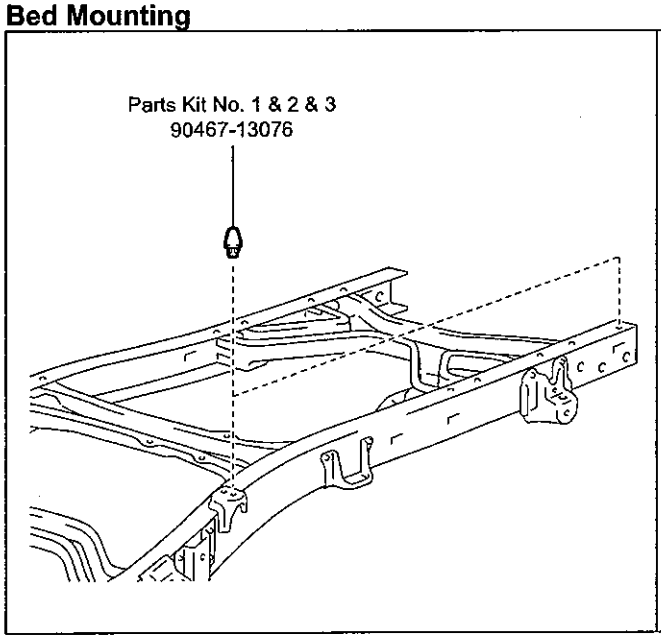

Spare Tire Carrier

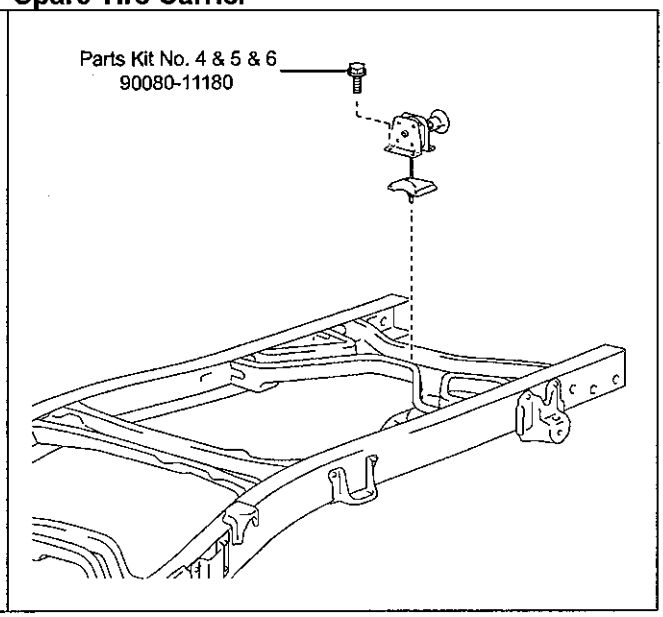

Brake Tubes

- With ABS -

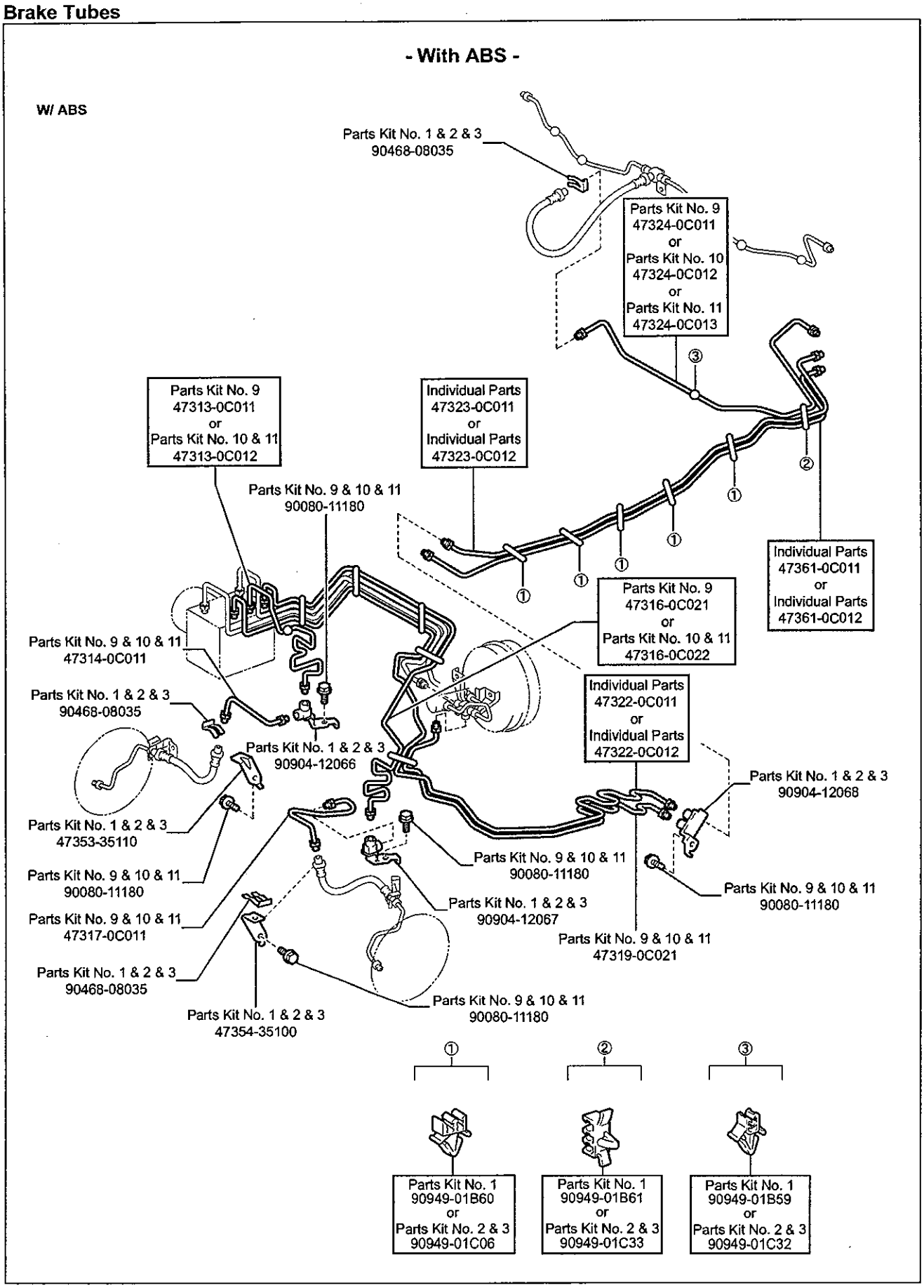

- Without ABS -

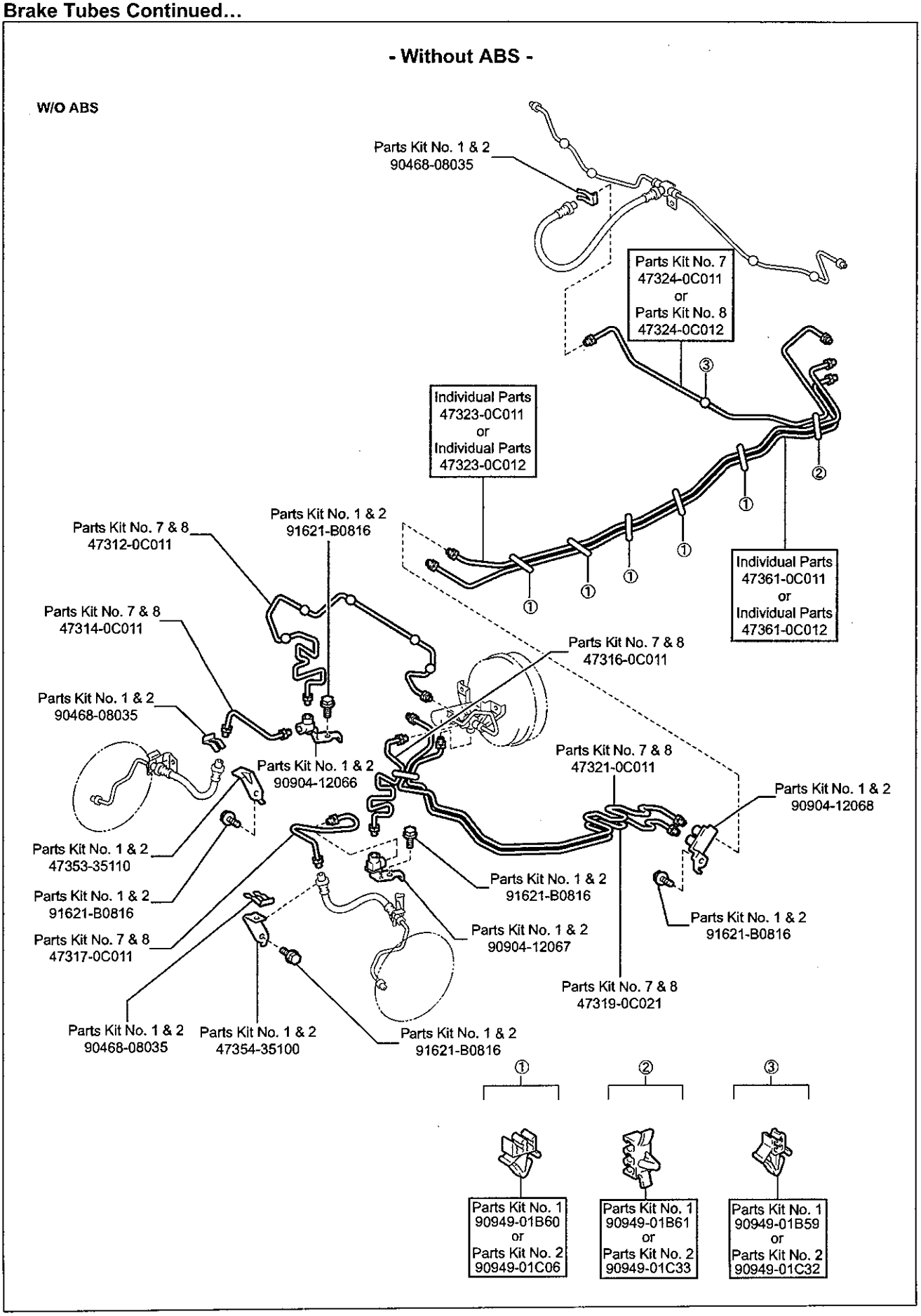
W/O ABS
Parts Kit No. 1 & 2
90468-08035
Parts Kit No. 7
47324-0C011
or
Parts Kit No. 8
47324-0C012
Individual Parts
47323-0C011
or
Individual Parts
47323-0C012
Individual Parts
47361-0C011
or
Individual Parts
47361-0C012
Parts Kit No. 7 & 8
47312-0C011
Parts Kit No. 1 & 2
91621-B0816
Parts Kit No. 7 & 8
47314-0C011
Parts Kit No. 7 & 8
47316-0C011
Parts Kit No. 1 & 2
90468-08035
Parts Kit No. 1 & 2
90904-12066
Parts Kit No. 7 & 8
47321-0C011
Parts Kit No. 1 & 2
90904-12068
Parts Kit No. 1 & 2
47353-35110
Parts Kit No. 1 & 2
91621-B0816
Parts Kit No. 1 & 2
91621-B0816
Parts Kit No. 7 & 8
47317-0C011
Parts Kit No. 1 & 2
90904-12067
Parts Kit No. 1 & 2
91621-B0816
Parts Kit No. 7 & 8
47319-0C021
Parts Kit No. 1 & 2
90468-08035
Parts Kit No. 1 & 2
47354-35100
Parts Kit No. 1 & 2
91621-B0816
Parts Kit No. 1
90949-01B60
or
Parts Kit No. 2
90949-01C06
Parts Kit No. 1
90949-01B61
or
Parts Kit No. 2
90949-01C33
Parts Kit No. 1
90949-01B59
or
Parts Kit No. 2
90949-01C32

Fuel Tubes

- 00 to 02 Model Year -

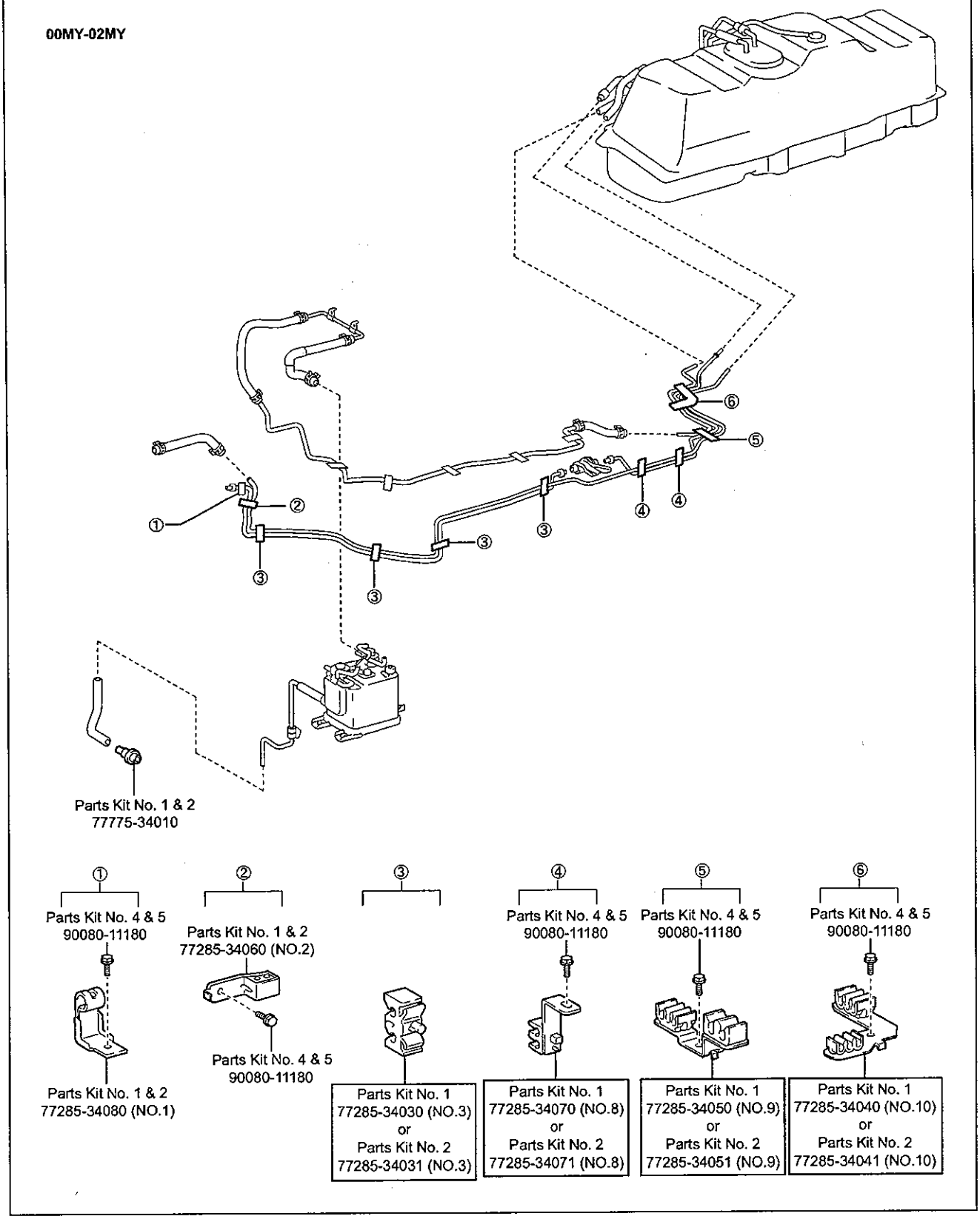

- 03 Model Year -

03MY

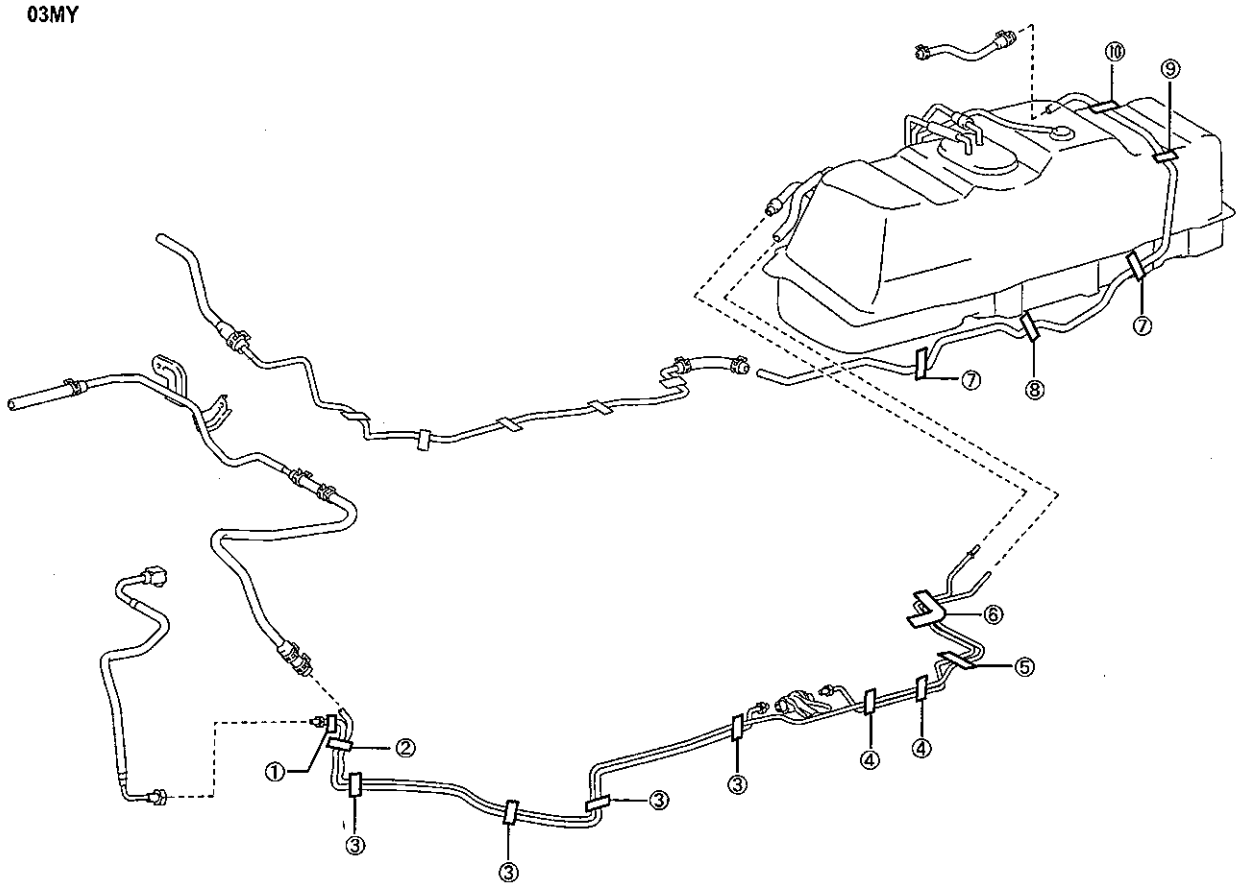

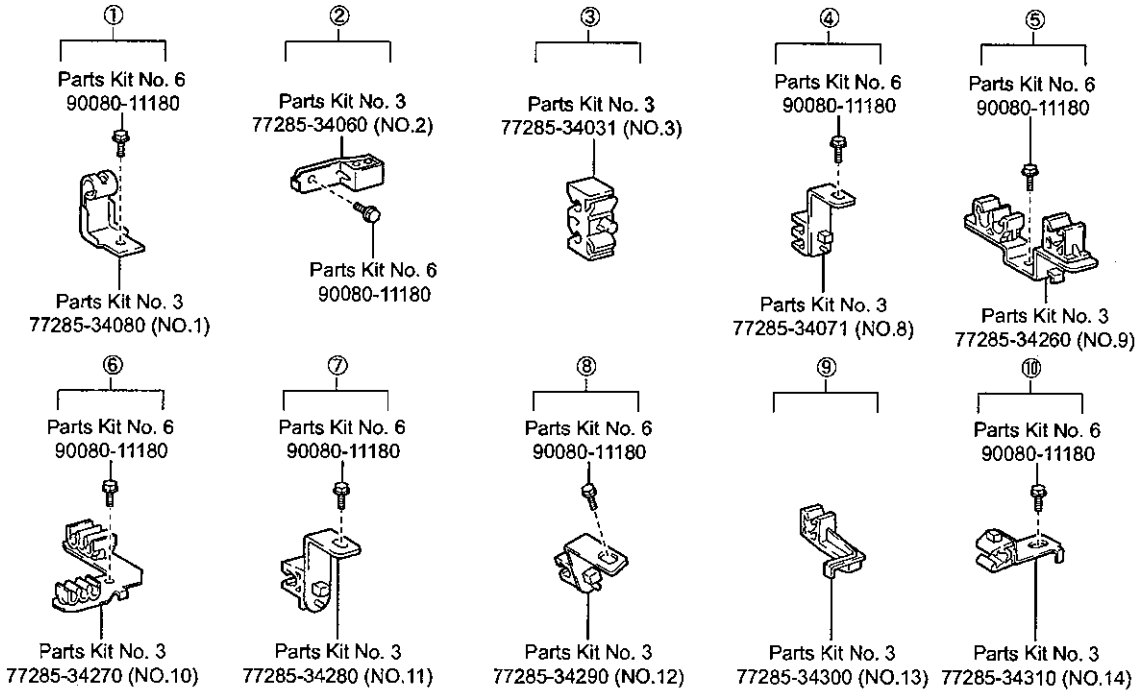

Wire Harness Clamps

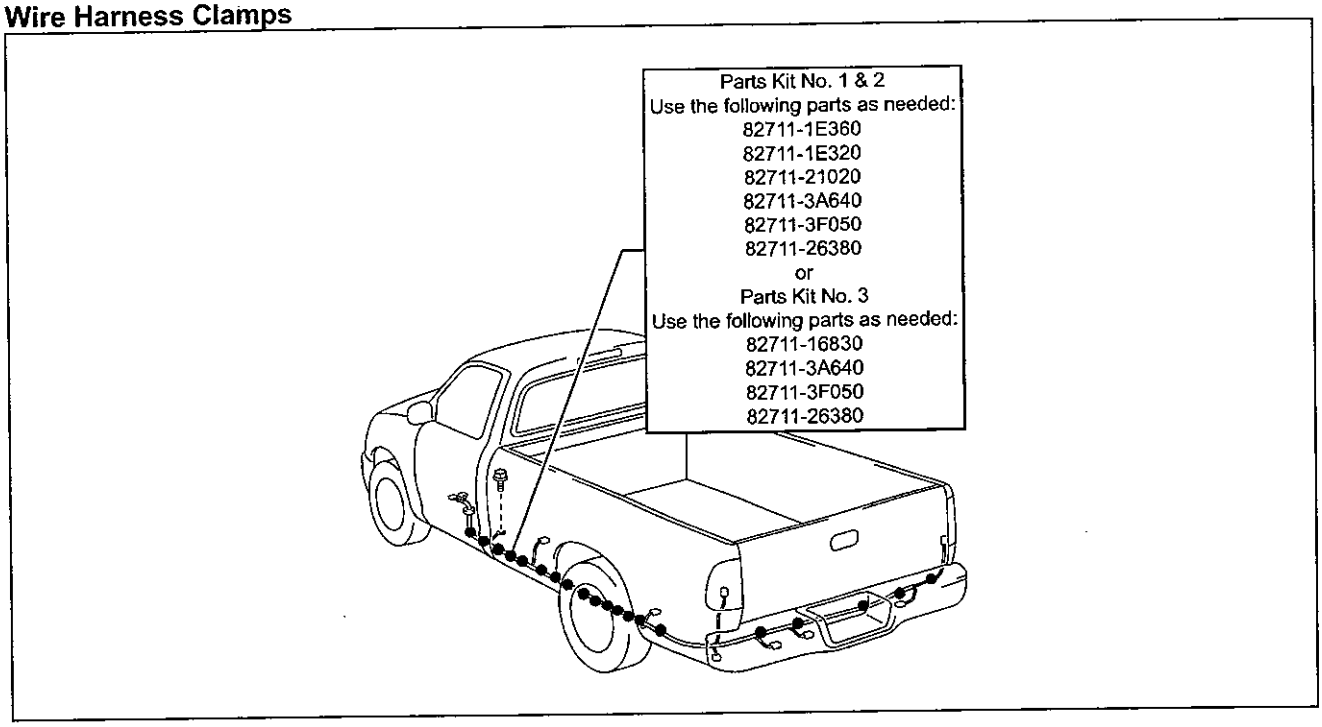

LSPV

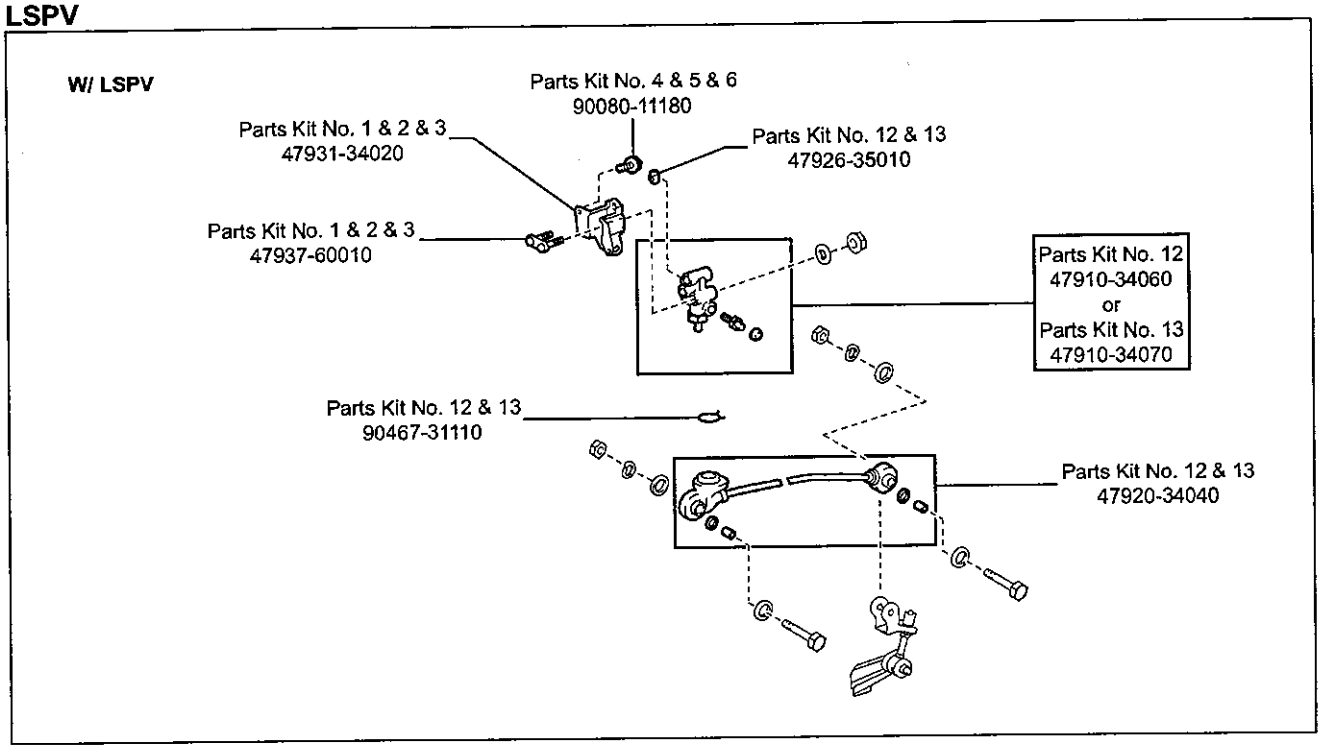

Front Differential

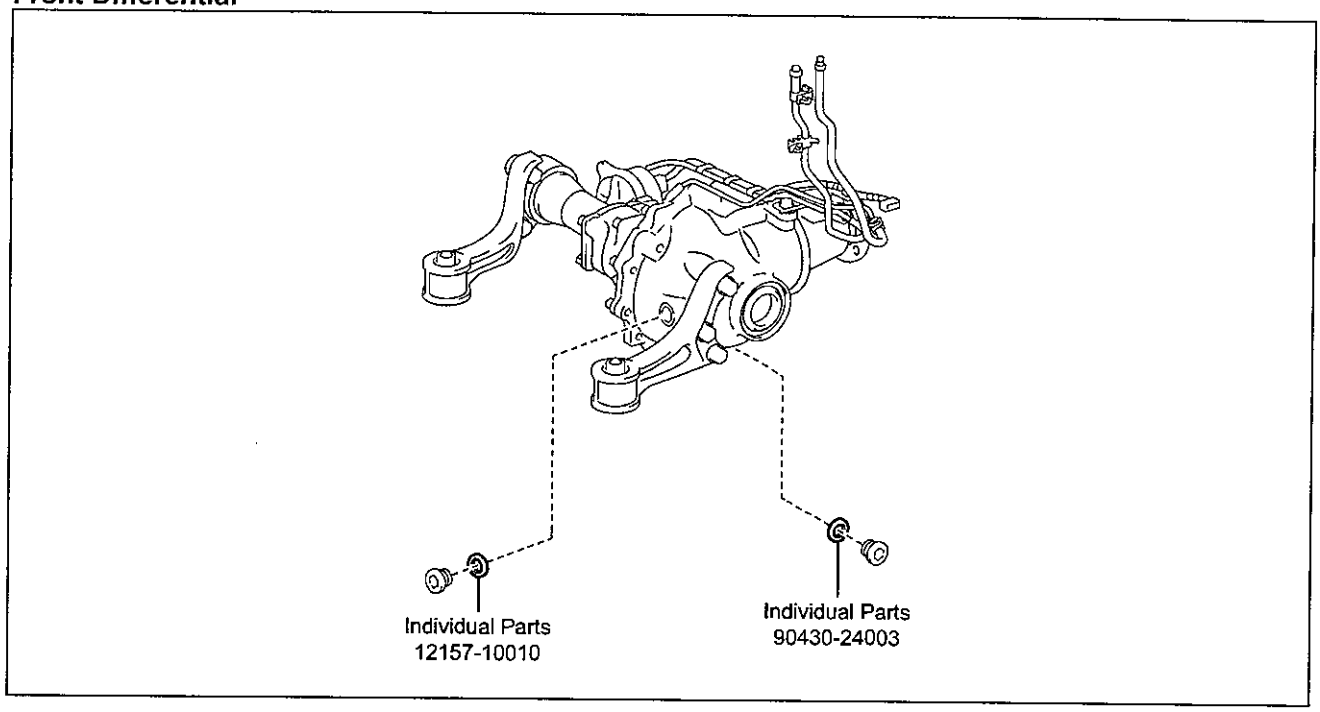

Front Driveshaft

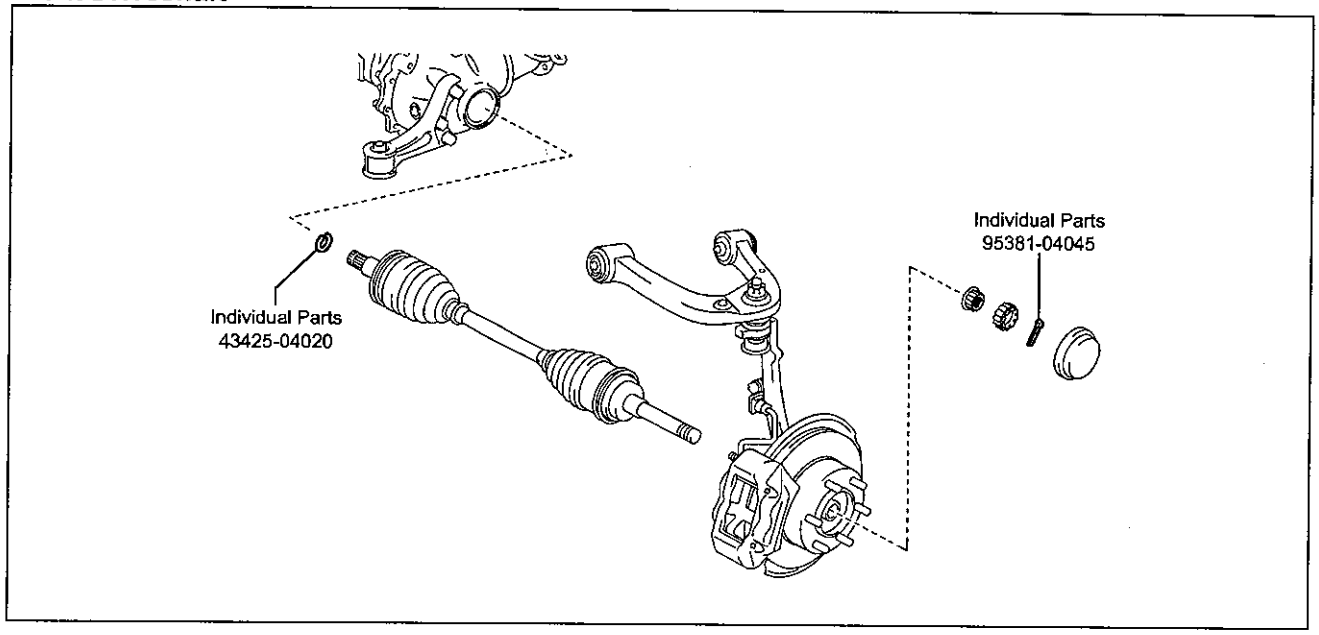

Power Steering

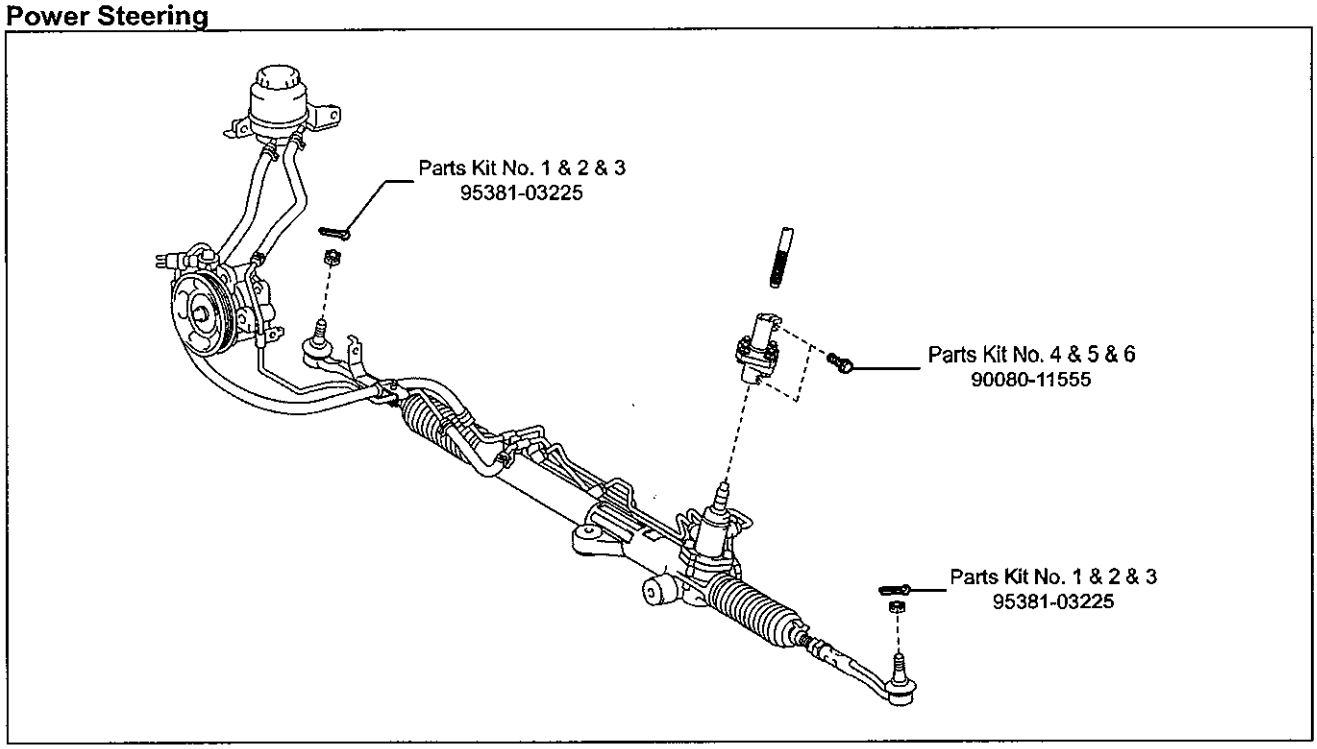

ABS

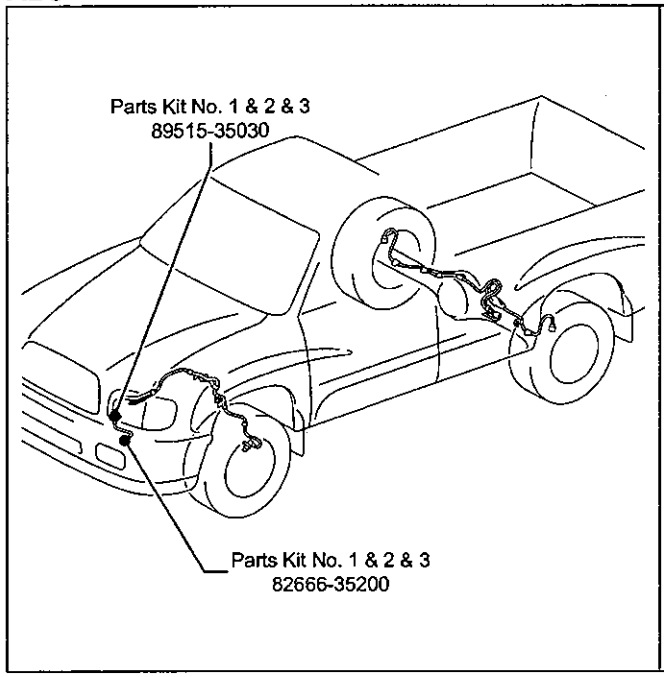

Engine Mounting

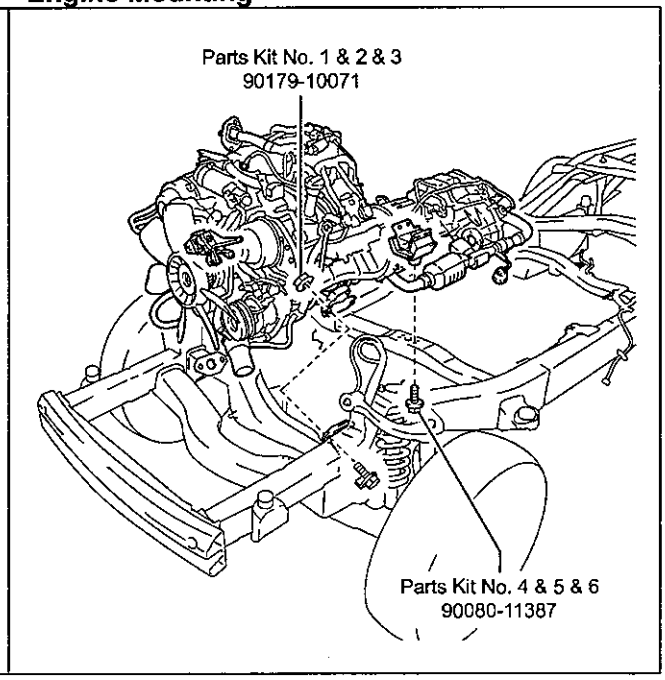

- 2UZ-FE -

2UZ-FE

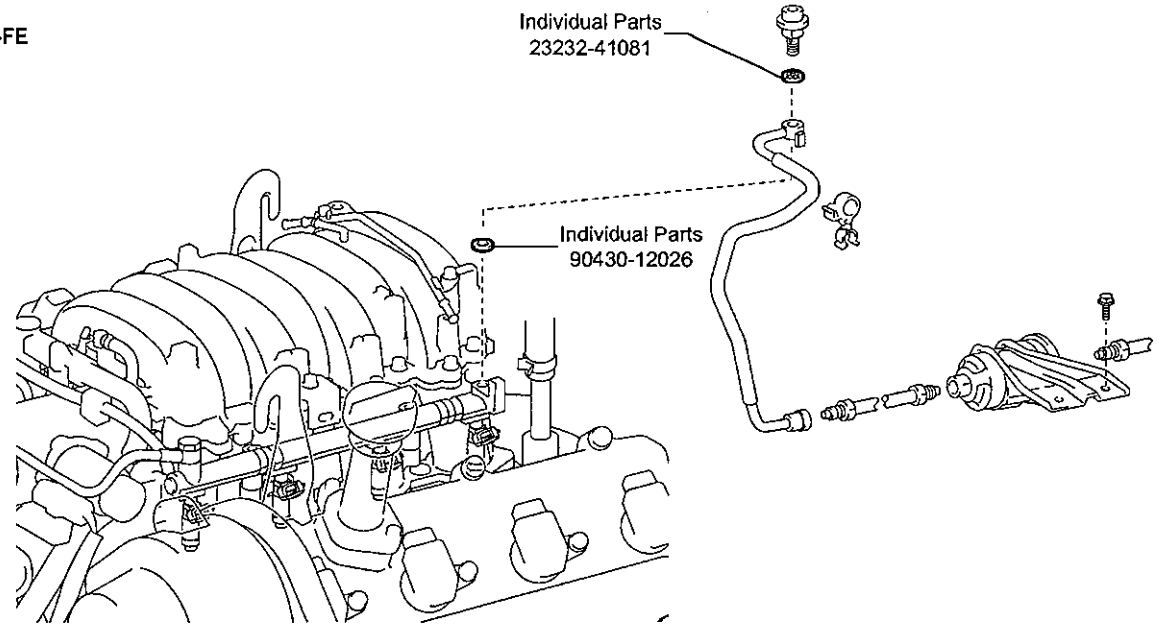

- 5VZ-FE -

5VZ-FE

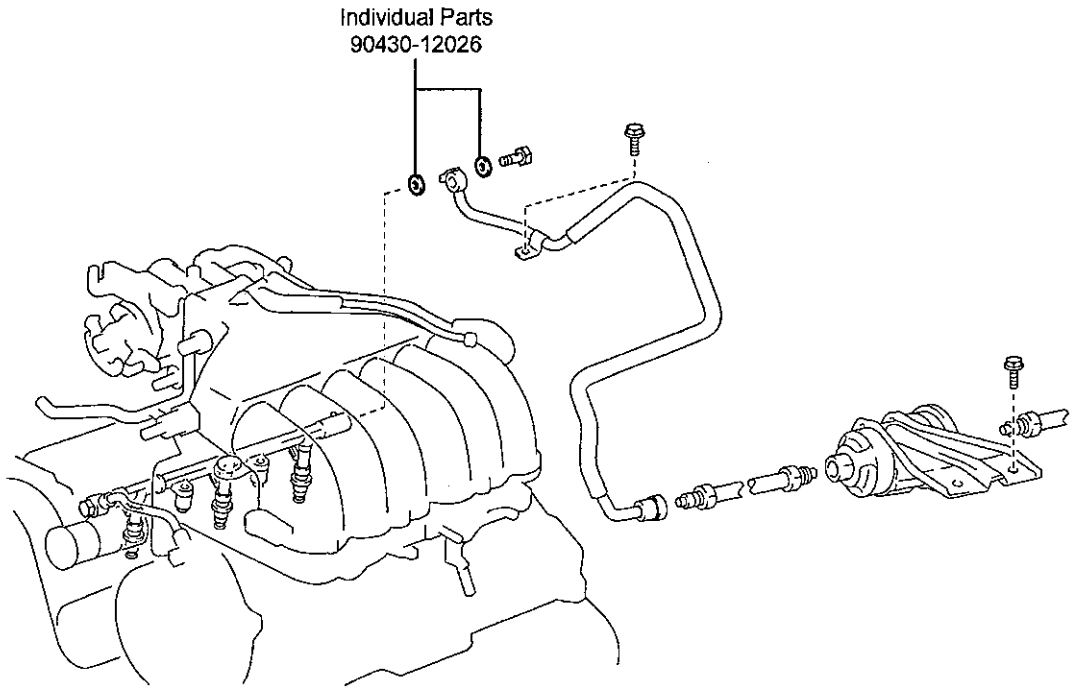

Exhaust System

- 2UZ-FE -

2UZ-FE

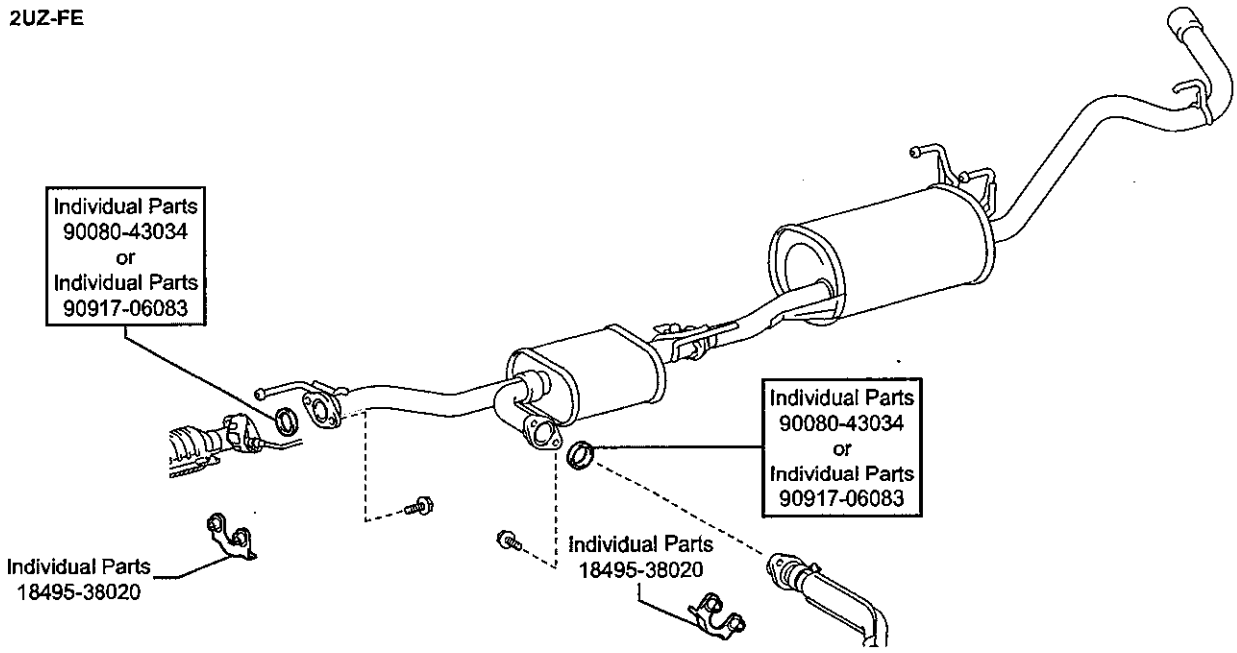

- 5VZ-FE -

5VZ-FE

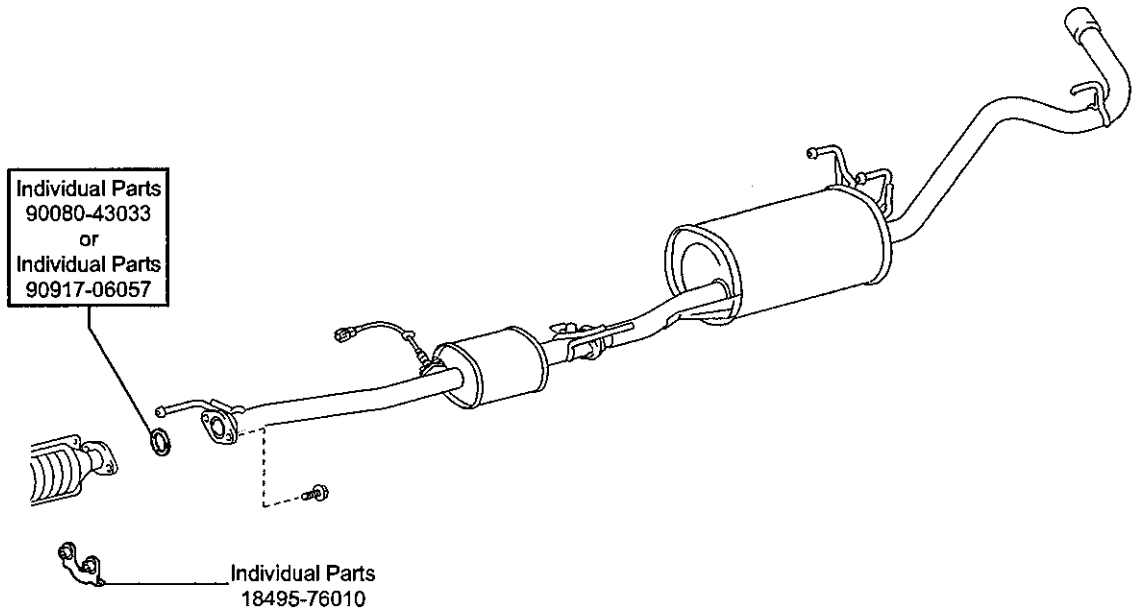

Fuel Tank

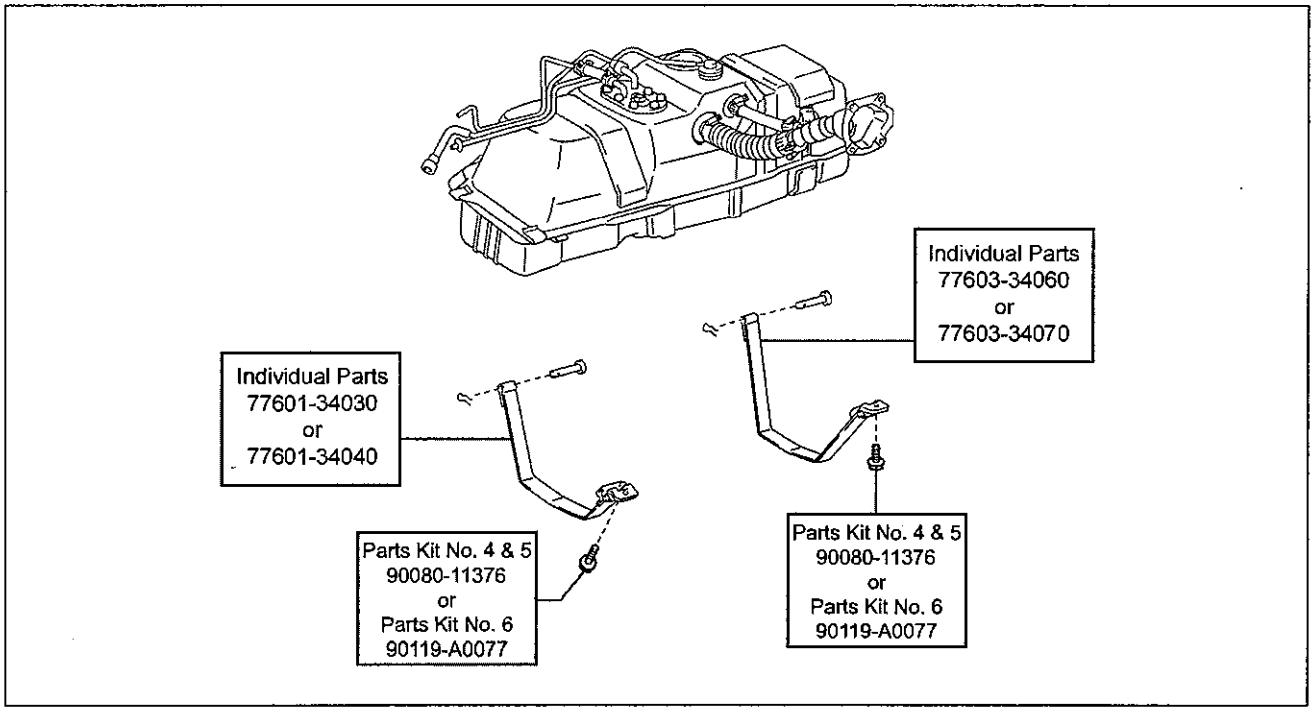

Air Conditioning

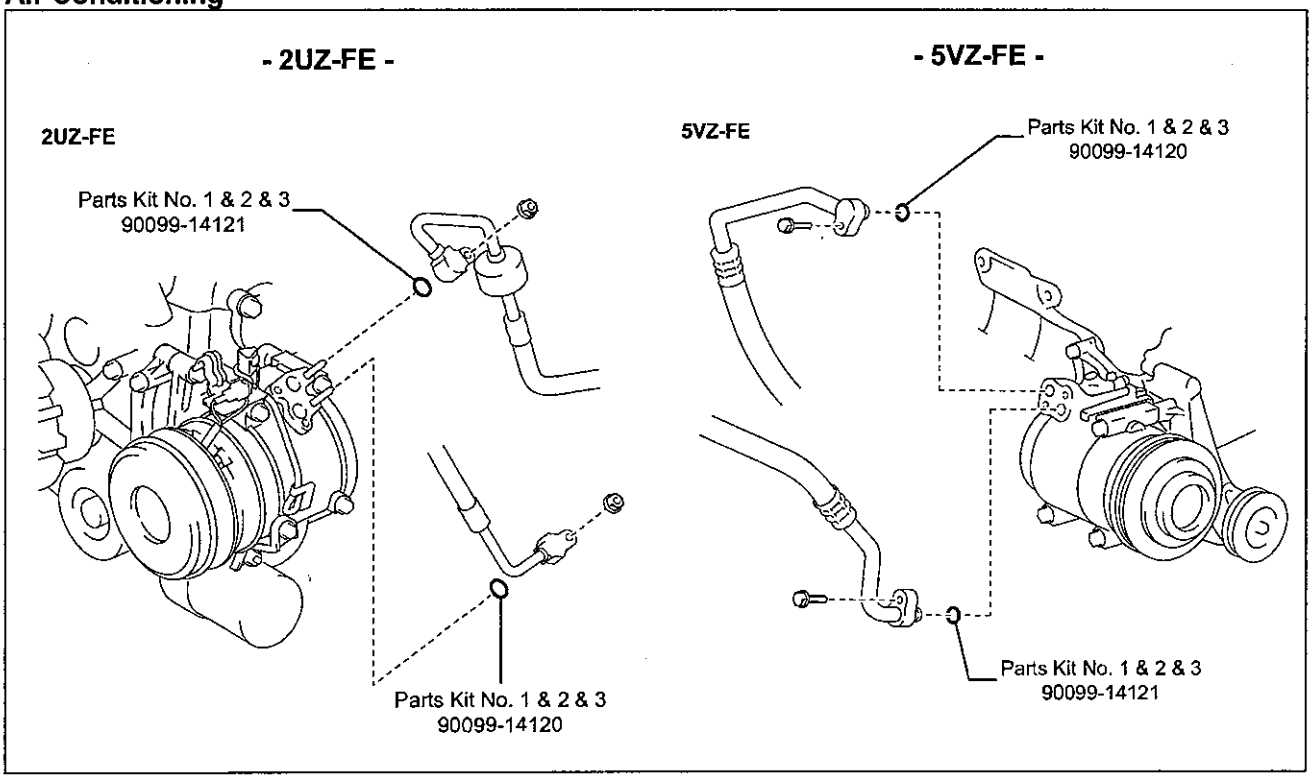

AT Shift Cable

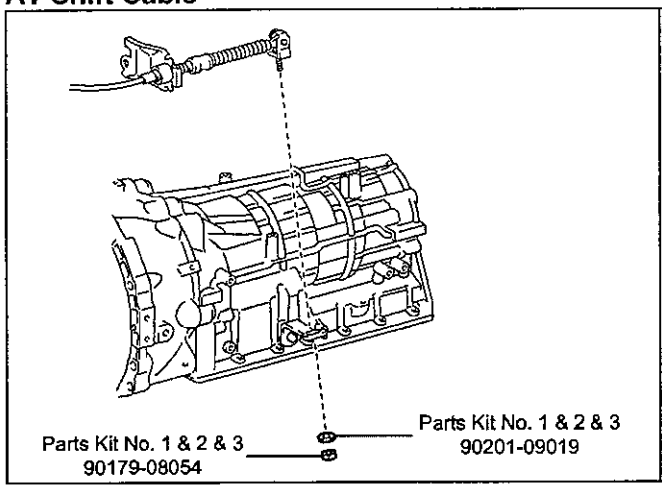

Radiator

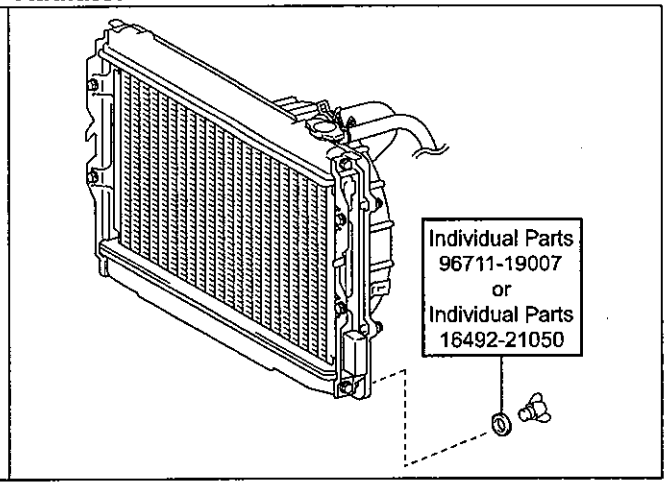

Front Bumper

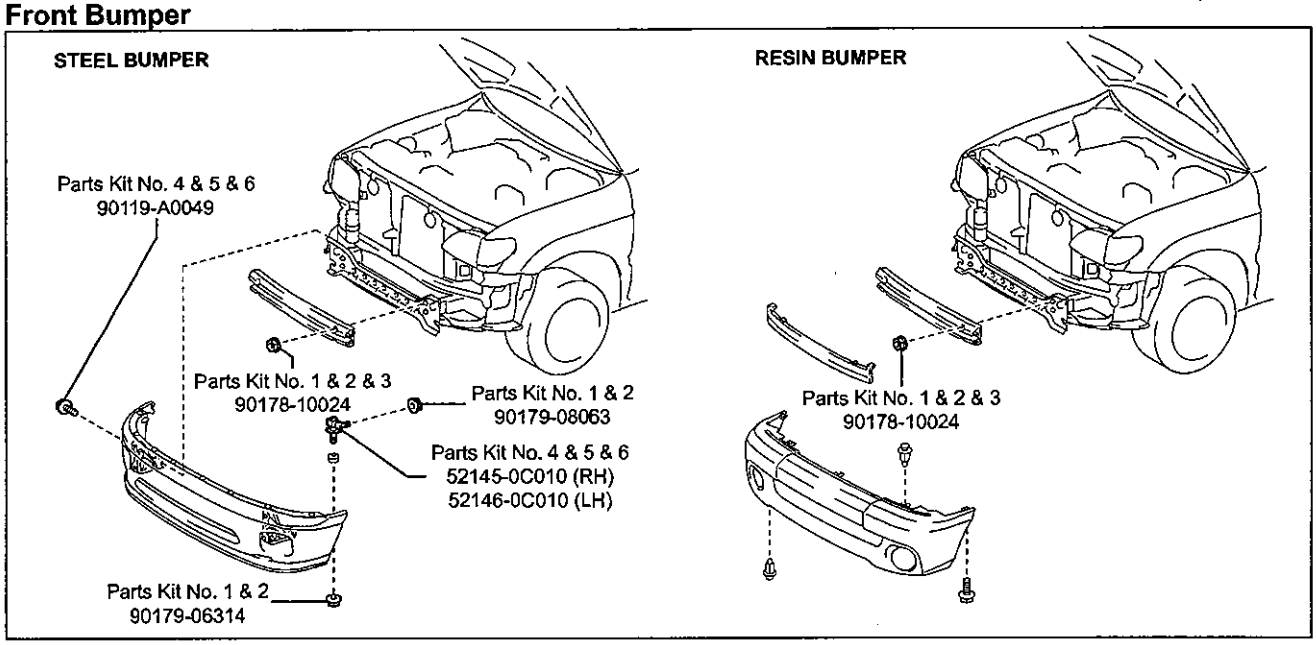

Rear Bumper

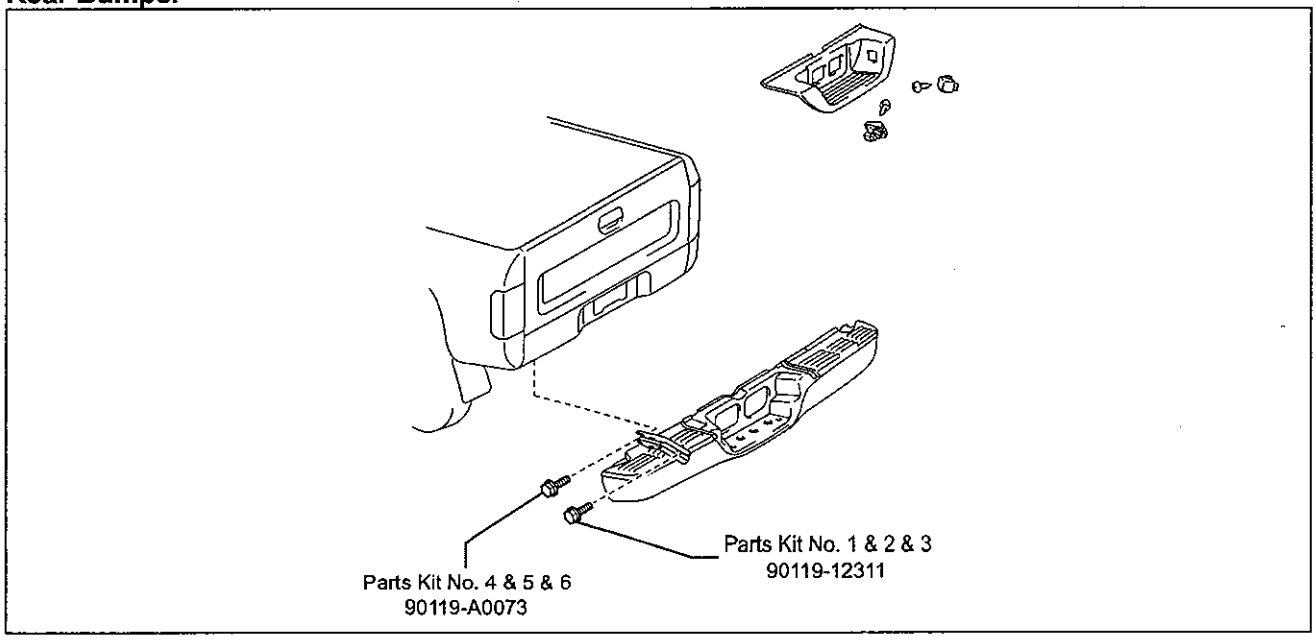

III. FRAME INSPECTION

1. PERFORM INITIAL PRE-HOIST INSPECTION

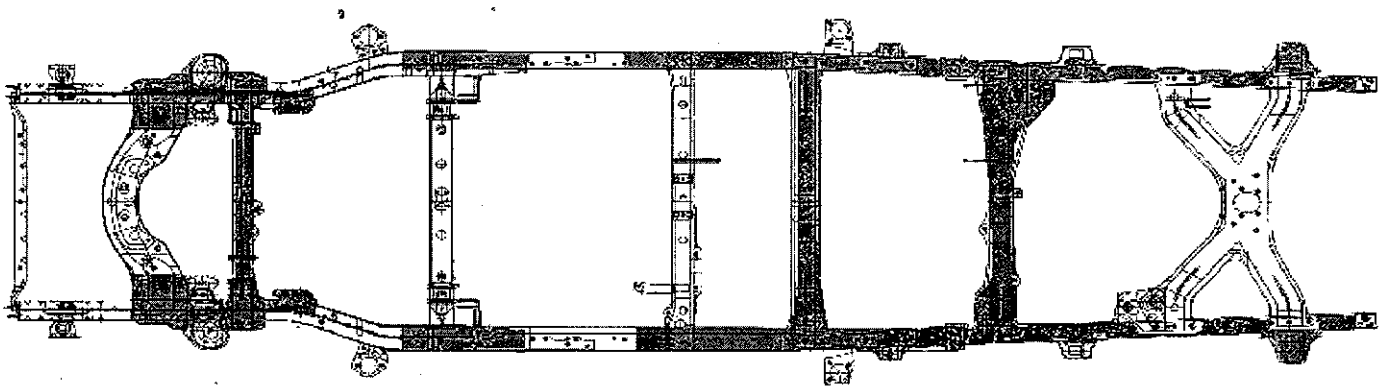

2. VISUALLY INSPECT THE FRAME

a) Visually inspect the specific areas (highlighted in **green**) of the frame assembly as shown for visible signs of perforation.

Judgement Criteria	Result	Action
Perforation (hole) of 10 mm or more	NG	• Replace the frame • Proceed to section **IV. VEHICLE INSPECTION** below to begin the frame replacement process.
Perforation (hole) of less than 10 mm	OK	• No action required • Check the TIS Vehicle Inquiry System to determine if the vehicle is involved in Safety Recall 90M. If involved and not already completed, perform Safety Recall 90M.

NOTE:
Use protective eyewear and gloves when performing the under vehicle inspection as rusted metal may flake off.

IV. VEHICLE INSPECTION

STOP

- Visually inspect both the vehicle interior and exterior. Note any damage found during the visual inspection prior to beginning work.
- As the vehicle is disassembled, you may encounter parts that are in need of replacement which are not covered by this repair procedure. If this is the case, please take the time to inform the customer that these parts can be replaced with minimal labor cost.

STOP

Due to the size and weight of the frame, only ***above-ground lifts*** are to be utilized when performing the frame replacement on 2000 – 2003 Tundra Vehicles. If a dealership is not equipped with above-ground lifts, the frame replacement may need to be sublet to a body shop or other dealership business.

V. FRAME REPLACEMENT WORK PROCEDURE

A. SAFETY CHECKLIST & PRECAUTIONS WHEN DRAINING THE FUEL SYSTEM

STOP

- Always remember ***"SAFETY FIRST"***.
- Be extremely careful when handling fuel to prevent fires from occurring.
- Before beginning work on the fuel system, perform the following safety check list.
- Before removing any fuel system part, drain all fuel to prevent spilling.

1. AIR VENTILATION

☐ Perform work in a well ventilated area.
☐ **DO NOT** work underground or in an area where fuel vapors may fill the room due to poor ventilation.
☐ Quickly clean up any spilled fuel with a dry cloth and dissipate the fuel vapors.
☐ Dry all cloths that have come in contact with fuel in a well ventilated area and dispose of them properly (according to applicable local regulations).

2. FIRES AND IGNITION SOURCES ARE STRICTLY PROHIBITED

☐ Fires and ignition sources are prohibited while working on the fuel system.
☐ Clearly display the sign found on the next page stating **"WORKING WITH GASOLINE, NO FIRES OR IGNITION SOURCES".**
☐ Smoking is prohibited near the work area.
☐ **DO NOT** work in areas where there are welders, grinders, drills, electric motors, heaters, etc.
☐ **DO NOT** use work lamps or any other electrical appliance due to the risk of sparks flying from the power switch or a rise in temperature.
☐ **DO NOT** use metal hammers while working, due to the risk of flying sparks.
☐ **DO NOT** start any engines or perform any of the above in neighboring work bays.

3. FIRE EXTINGUISHER

☐ Have a fire extinguisher ready and available before beginning work.

4. PREVENT STATIC ELECTRICITY

☐ To help prevent static electricity, lightly wet the floor with water, but not to the point where it creates a hazardous working condition.
☐ Place appropriate warning cones or stand signs around the area as a caution.

5. PRECAUTIONS WHEN USING A LIFT

☐ For bays equipped with auto lifts, cover all access cover joints with duct tape.
☐ In the event that fuel has leaked inside the auto lift, remove the access cover and clean up any spilled fuel. Dissipate fuel vapors until the smell is gone.

6. PREVENT THE FUEL FROM SPRAYING

☐ When disconnecting any fuel tubes, pipes, hoses or connectors there may still be some pressure remaining, even after discharging the system. To prevent the fuel from spraying, cover the tubes, pipes or connectors with a shop rag before disconnecting.
☐ Remember to always wear protective goggles especially when disconnecting fuel tubes, pipes, hoses or connectors.

7. PREVENT THE FUEL FROM CONTACTING OTHER PARTS

☐ Do not allow the fuel to come in contact with any parts made of rubber or leather.

8. ASSIGN A SAFETY SUPERVISOR

☐ Assign a safety supervisor to be in charge of all safety precautions and fire hazards around the work area.

■ Copy And Display When Working

WORKING WITH GASOLINE

NO FIRES
NO IGNITION SOURCES

Supervisor _____

- Copiar y exhibir al trabajar

TRABAJANDO CON GASOLINA

NINGÚN INCENDIOS

NINGUNA FUENTE DE IGNICIÓN

Supervisor _____

B. REMOVE THE BED ASSY

- If the frame is perforated, ONLY raise the vehicle high enough to remove the tires.
- For added safety and support place jack stands under the front and rear portions of the frame.
- ***DO NOT*** work directly underneath the vehicle when performing bed assy removal.
- The actual vehicle specs, equipment and parts required may differ than what is shown. Please use the correct specifications and parts for the model you are working on.
- For additional repair information, please reference to the appropriate repair manual found on TIS for the vehicle you are working on.

1. CENTER THE VEHICLE BETWEEN THE LIFT ARMS

a) Verify the vehicle is aligned with the center point of the lift to prevent interference and damage to the frame and/or lift.

2. REMOVE THE FOLLOWING PARTS

- License Plate Lights
- Center Rear Bumper Pad
- Rear Bumper Assy
- Trailer Hitch ***(If Equipped)***
- Rear Mudguards ***(If Equipped)***
- Side Step Assy ***(If Equipped)***
- Fuel Tank Filler Pipe Shield

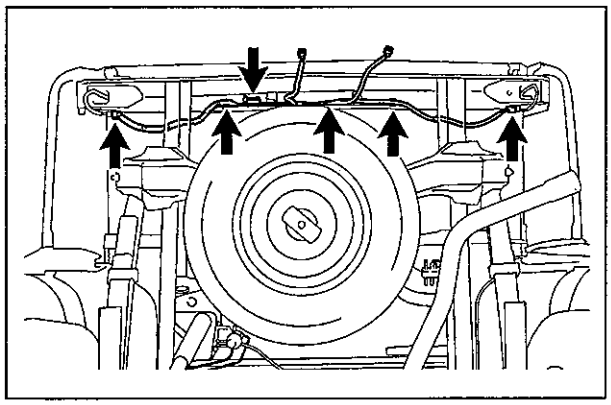

3. REMOVE THE WIRE HARNESS

a) Disconnect the connectors.
b) Disconnect the clamps and the frame wire harness from the bed assembly.

NOTE:

- **The number of connectors may differ depending on the vehicle specification.**
- **Be careful not to damage the wire harness clamps when removing them.**

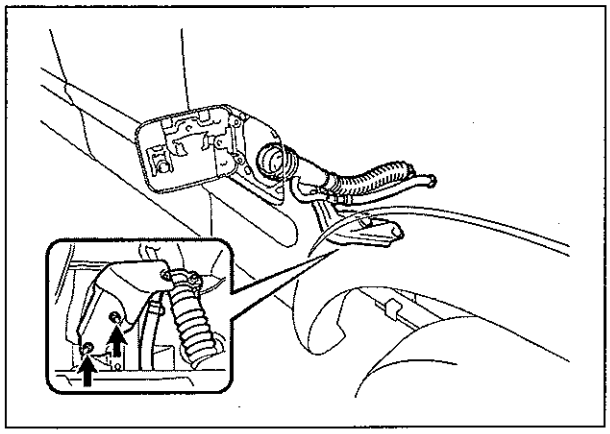

4. DISCONNECT THE FUEL INLET PIPE

a) Remove the 2 nuts and disconnect the fuel inlet pipe.

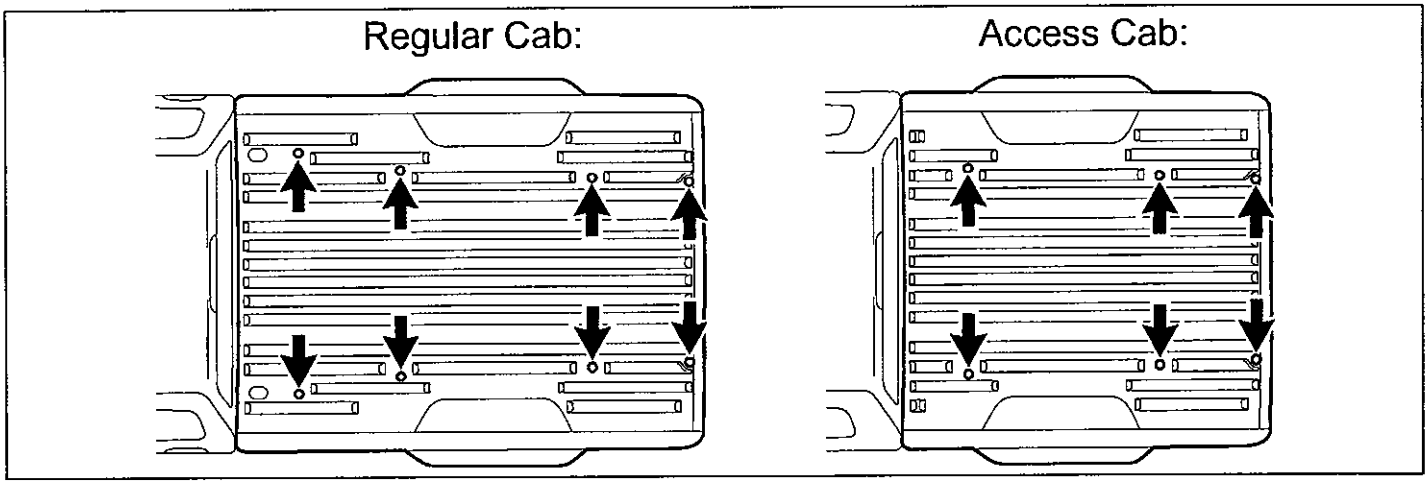

5. REMOVE THE BED ASSEMBLY

a) Using a Torx® T55H Tamper Resistant Socket, remove the Torx ® bolts from the bed assembly
- Regular Cab: 8 Torx® bolts
- Access Cab: 6 Torx® bolts

NOTE:
- **Use 4 or more people to remove the bed assembly from the frame.**
- **Evenly support the bed assembly when removing it.**

C. DISCHARGE THE FUEL SYSTEM PRESSURE

STOP

- DO NOT disconnect any part of the fuel system until you have discharged the fuel system pressure.
- Even after discharging the fuel system pressure, place a piece of cloth around the tubes, pipe, hoses and connectors as you separate them to reduce the risk of fuel spraying on yourself, in the engine compartment and onto other parts.
- For additional repair information, please reference to the appropriate repair manual in TIS for the vehicle you are working on.

1. CHECK FOR DTCs

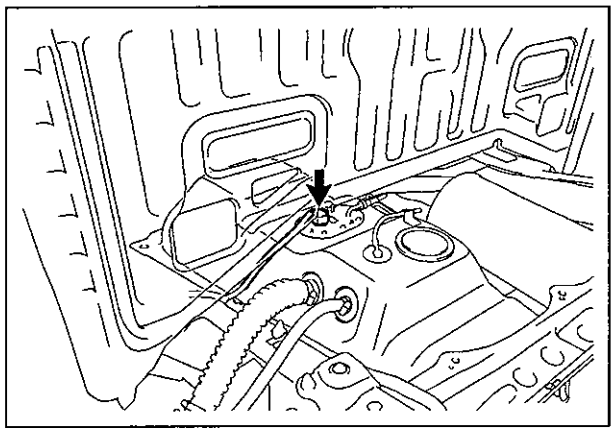

2. DISCHARGE THE FUEL SYSTEM PRESSURE

a) Disconnect the fuel pump connector.
b) Start the engine.
c) After the engine has stopped, turn the ignition switch OFF.
d) Crank the engine again to check that it does not start.

NOTE:
Please make sure to follow the procedure listed above. This will prevent a large amount of gasoline from spilling out when high pressure fuel tube is disconnected.

3. RECORD THE RADIO STATION PRESETS & REMOVE THE BATTERY

NOTE:
Wait 90 seconds after the negative (-) terminal cable is disconnected from the battery before proceeding. Doing so will prevent the SRS from being deployed (i.e. airbag, seat belt pretensioner, etc.).

D. REMOVE THE CAB BODY ASSY

- If the frame is perforated, ONLY raise the vehicle high enough to remove the tires.
- For added safety and support place jack stands under the front and rear portions of the frame.
- *DO NOT* work directly underneath the vehicle when performing cab body assy removal, unless noted.
- The actual vehicle specs, equipment and parts required may differ than what is shown. Please use the correct specs and parts for the model you are working on.
- For additional repair information, please reference to the appropriate repair manual in TIS for the vehicle you are working on.

1. REMOVE THE ENGINE UNDER COVERS

NOTE:
Use precaution when performing this step, as you will need to work underneath the vehicle.

2. EVACUATE THE REFRIGERANT FROM THE AIR CONDITIONING SYSTEM

3. DRAIN THE FOLLOWING FLUIDS

- Coolant
- Clutch Fluid ***(Manual Transmission Vehicles Only)***
- Brake Fluid

NOTE:
DO NOT remove the radiator cap while the radiator and engine are hot, doing so may cause the coolant to spray out causing potential injuries.

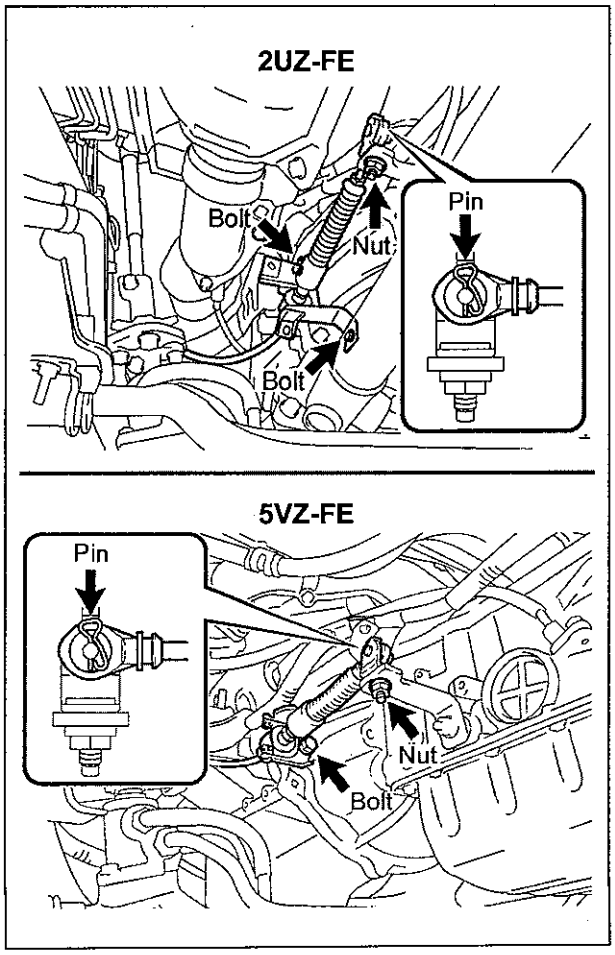

4. DISCONNECT THE SHIFT CABLE

NOTE:
Use precaution when performing this step, as you will need to work underneath the vehicle.

a) Remove the pin and washer.
b) Remove the bolt(s) and disconnect the shift cable.

NOTE:
If the pin is difficult to remove, remove the nut and then the cable.

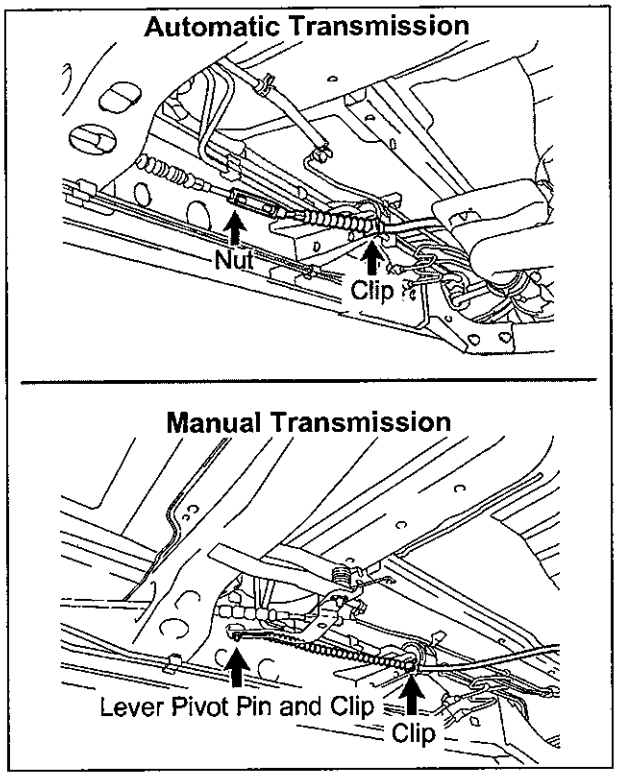

5. **DISCONNECT THE NO. 1 PARKING BRAKE CABLE**

NOTE:
Use precaution when performing this step, as you will need to work underneath the vehicle.

For Automatic Transmission Vehicles
a) Loosen the nut and separate the No.1 parking brake cable assy.
b) Remove the clip and the No.1 parking brake cable assembly.

For Manual Transmission Vehicles
a) Remove the clip and lever pivot pin.
b) Remove the clip and the No.1 parking brake cable assembly.

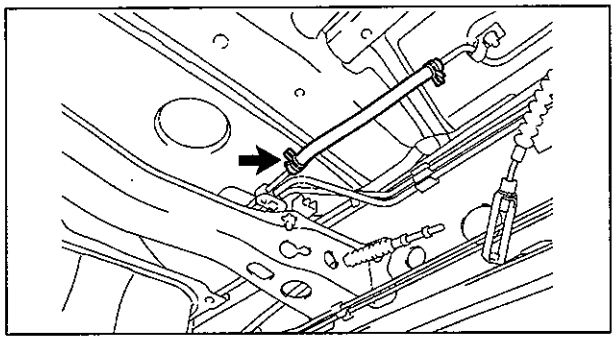

6. **DISCONNECT THE NO.1 FUEL HOSE**

NOTE:
Use precaution when performing this step, as you will need to work underneath the vehicle.

a) Remove the clip and disconnect the No.1 fuel hose.

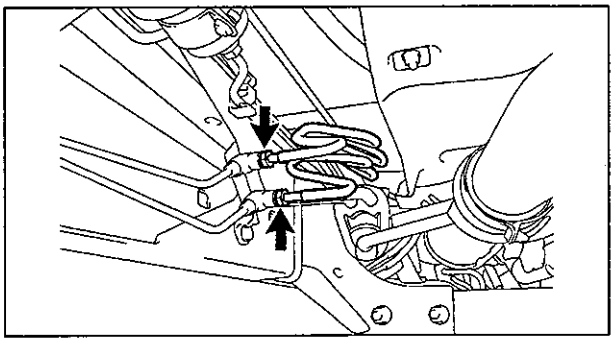

7. **DISCONNECT THE REAR BRAKE TUBES**

NOTE:
Use precaution when performing this step, as you will need to work underneath the vehicle.

a) Disconnect the 2 rear brake tubes.

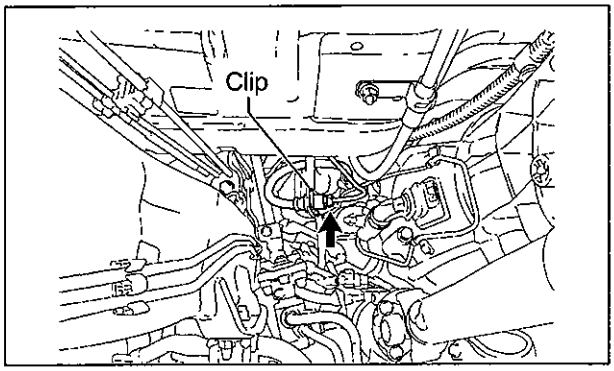

8. **DISCONNECT THE CLUTCH MASTER CYLINDER TUBE (MANUAL TRANSMISSION VEHICLES ONLY)**

NOTE:
Use precaution when performing this step, as you will need to work underneath the vehicle.

a) Disconnect the clutch master cylinder tube.
b) Remove the clip and disconnect the clutch hose.

9. **REMOVE THE FOLLOWING PARTS**

- Front Wheels
- Front Bumper Assy
- Radiator

NOTE:
After disconnecting the automatic transmission oil cooler hoses, plug them and cap the fittings to prevent the ATF from spilling out (*Automatic Transmission Vehicles Only*).

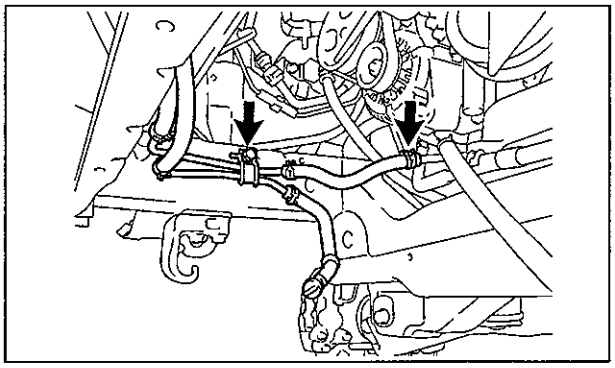

10. **REMOVE THE OIL COOLER PIPE (2UZ-FE ONLY)**

a) Disconnect the hose.
b) Remove the bolt and the oil cooler pipe.

11. **REMOVE THE FOLLOWING PARTS**

- Throttle Body Cover ***(2UZ-FE Only)***
- Air Cleaner Case Assy & Hose

12. **DISCONNECT THE FOLLOWING PARTS**

- Accelerator Cable, Engine Side ***(Only For Vehicles Produced On Or Before August 2002)***
- Cruise Control Cable ***(If Equipped)***

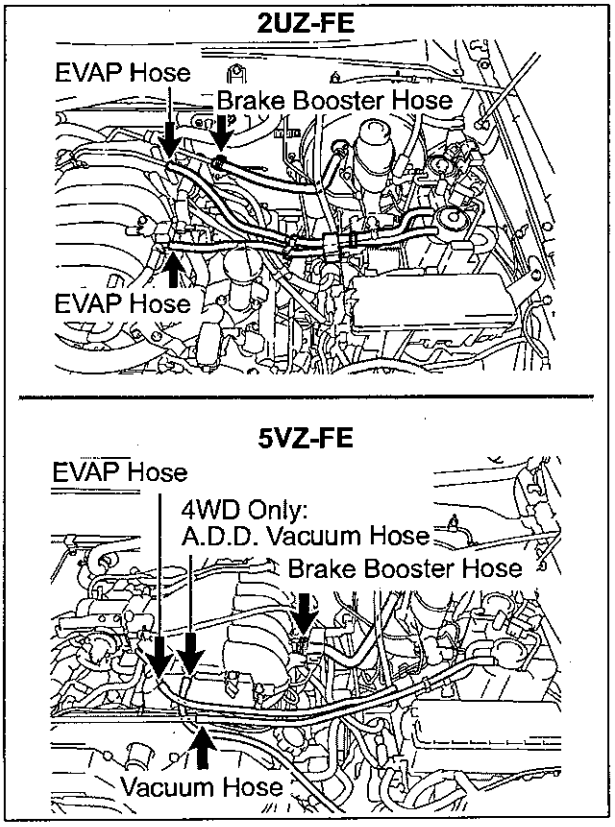

13. **DISCONNECT THE HOSES**

a) Disconnect the brake booster hose.
b) Disconnect the EVAP hose(s).
c) Disconnect the vacuum hose (***5VZ-FE Only***).
d) Disconnect the A.D.D. vacuum hose (***5VZ-FE 4WD Only***).

NOTE:
The number of hoses will differ depending on the vehicle specification.

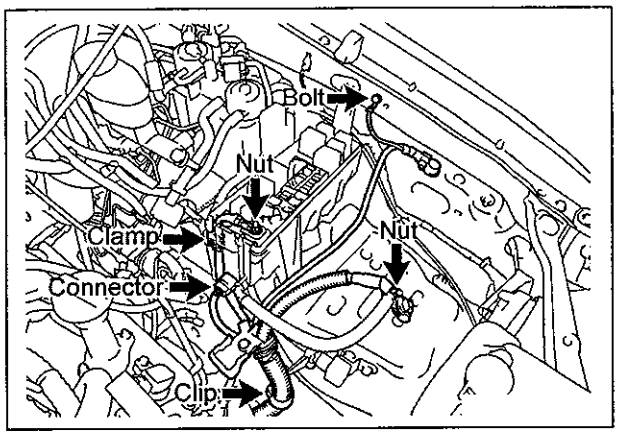

14. DISCONNECT THE NO.2 ENGINE WIRE HARNES

a) Remove the relay block cover.
b) Disconnect the connector and clamp.
c) Remove the bolt and disconnect the ground wire.
d) Remove the 2 nuts and disconnect the (+) positive battery cable.
e) Remove the clip and disconnect the No.2 engine wire harness.

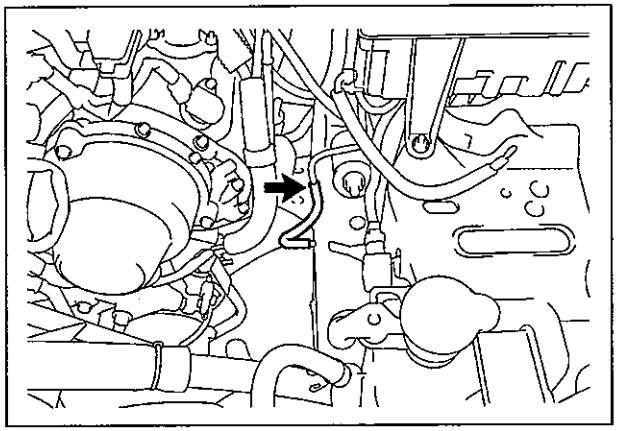

15. DISCONNECT THE NO.1 FUEL HOSE (ONLY FOR VEHICLES PRODUCED ON OR BEFORE AUGUST 2002)

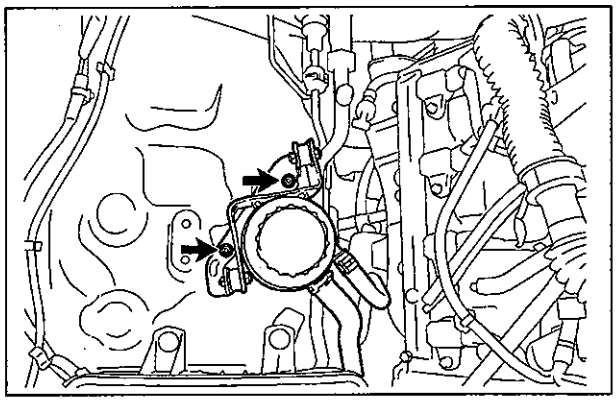

16. DISCONNECT THE VANE PUMP OIL RESERVOR (2UZ-FE ONLY)

a) Remove the 2 nuts and disconnect the vane pump oil reservoir.

17. DISCONNECT THE FOLLOWING PARTS

- A/C Compressor Discharge & Suction Hoses
- Water / Heater Hoses, Engine Side

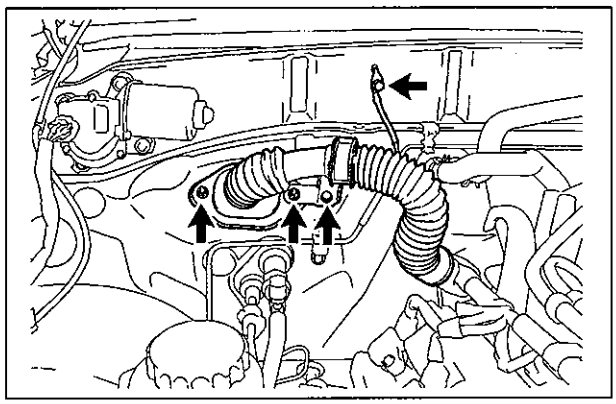

18. DISCONNECT THE ENGINE WIRE HARNESS

a) Remove the bolt and the ground wire.
b) Remove the bolt.
c) Remove the 2 nuts holding the engine wire harness container from the cowl panel.

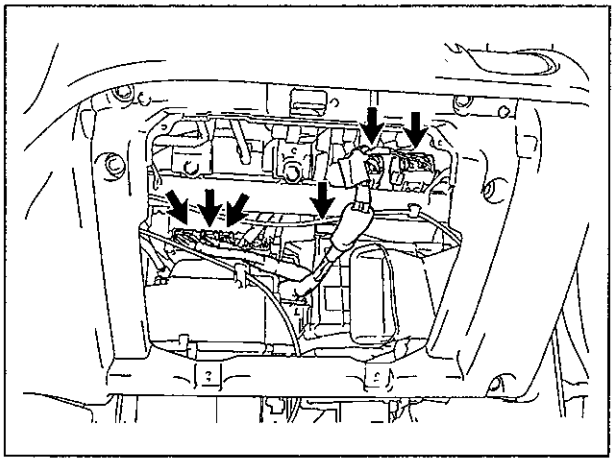

d) Remove the glove box.
e) Remove the lower No. 2 finish panel.
f) Remove the No. 4 heat register duct.
g) Disconnect the connectors and clamp.

NOTE:
The number of connectors will differ depending on the vehicle specification.

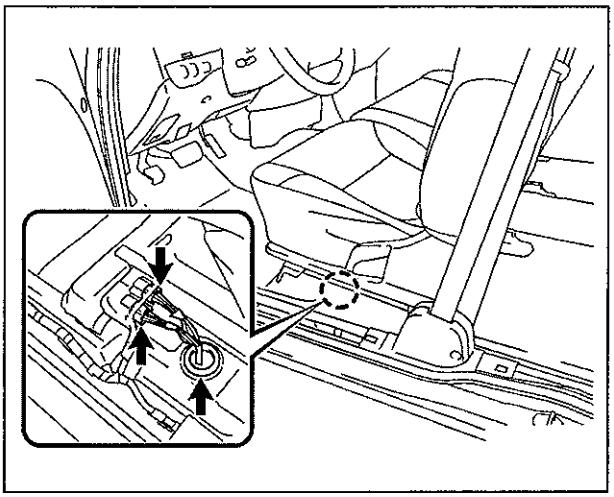

19. DISCONNECT THE FRAME WIRE HARNESS CONNECTOR

a) Remove the left front door scuff plate.
b) Remove the left access cab door scuff plate (***Access Cab Only***).
c) Remove the left front cowl side trim panel.
d) Disconnect the frame wire harness connector(s).
e) Remove the frame wire harness grommet from the cab assy.
f) Pull out the frame wire harness from the cab assy.

NOTE:
The number of connectors will differ depending on the vehicle spec.

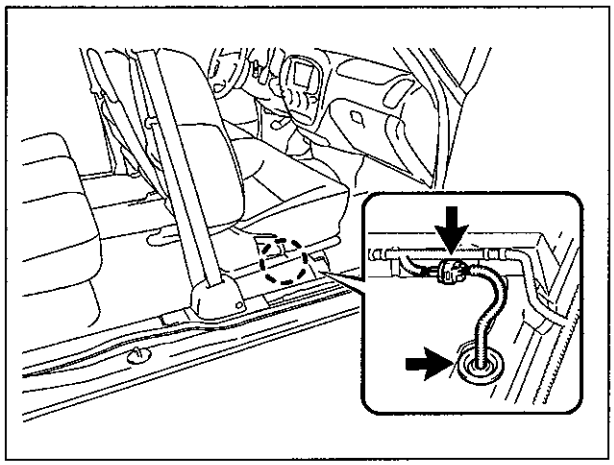

20. DISCONNECT THE OXYGEN SENSOR WIRE HARNESS CONNECTOR (5VZ-FE ONLY)

a) Remove the right front door scuff plate.
b) Remove the right access cab door scuff plate (***Access Cab Only***).
c) Remove the right front cowl side trim panel.
d) Disconnect the oxygen sensor wire harness connector.
e) Remove the oxygen sensor wire harness grommet from the cab assy.
f) Pull out the oxygen sensor wire harness from the cab assy.

21. REMOVE THE FOLLOWING PARTS

- Manual Transmission Shift Lever (***Manual Transmission Vehicles Only***)
- Transfer Case Shift Lever (***5VZ-FE 4WD Only***)

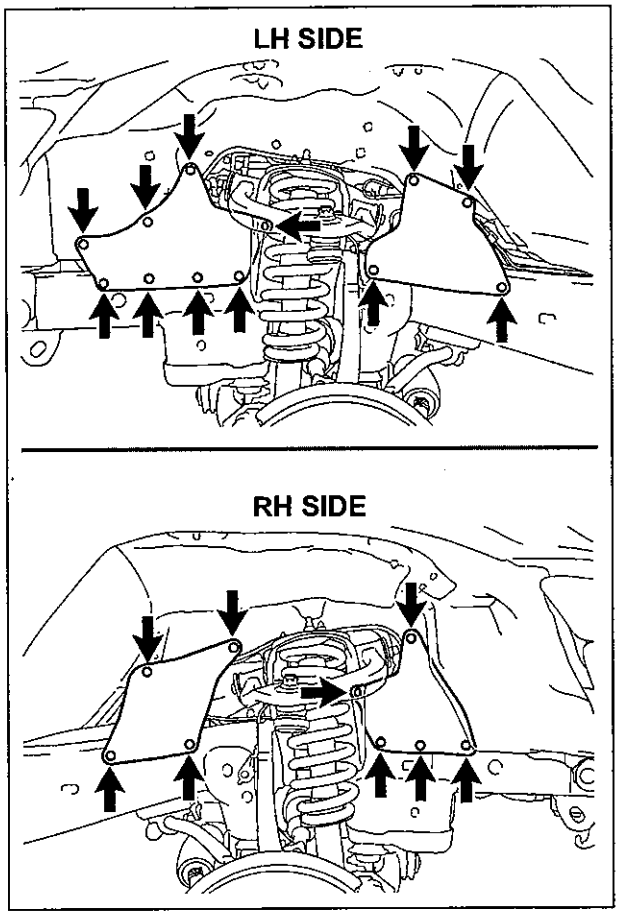

22. REMOVE THE FRONT FENDER APRON SEAL

a) Remove the 21 clips and 4 front fender apron seals.

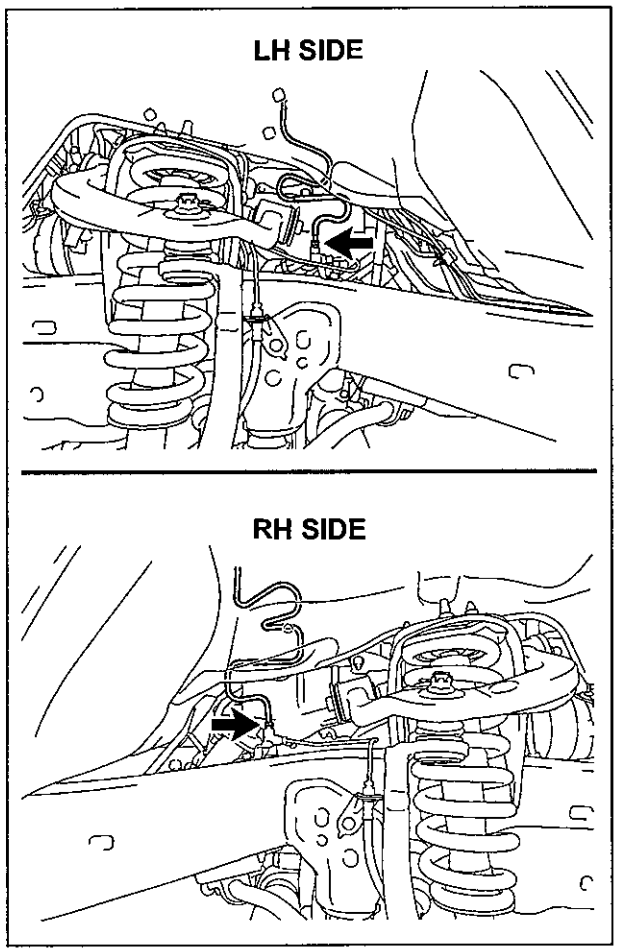

23. DISCONNECT THE FRONT BRAKE TUBES

a) Disconnect the front brake tube.
b) Repeat the procedure on the opposite side.

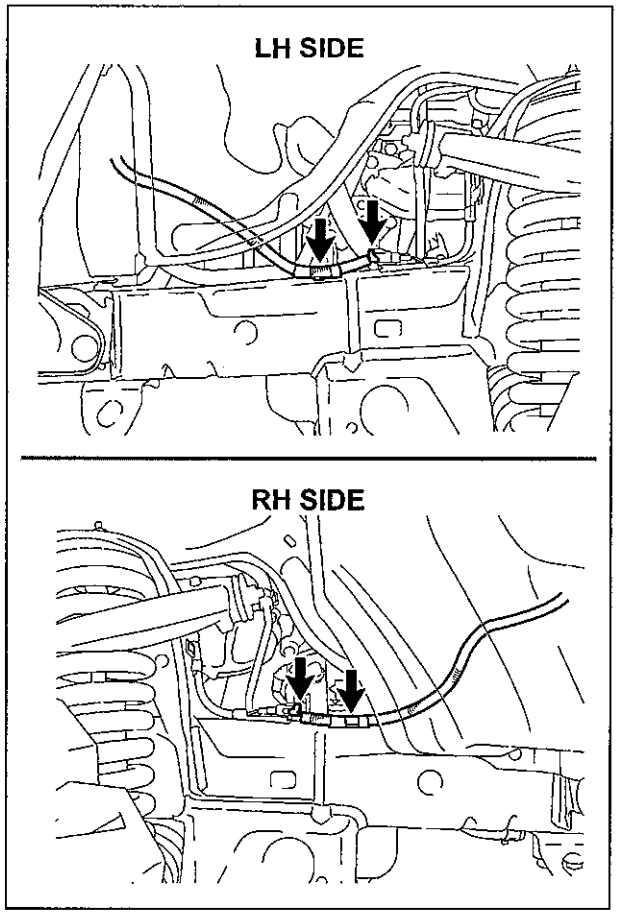

24. DISCONNECT THE FRONT SPEED SENSOR CONNECTORS (ABS EQUIPPED VEHICLES ONLY)

a) Disconnect the harness clamp and front speed sensor connector.
b) Repeat the procedure on the opposite side.

25. REINSTALL THE FRONT WHEELS

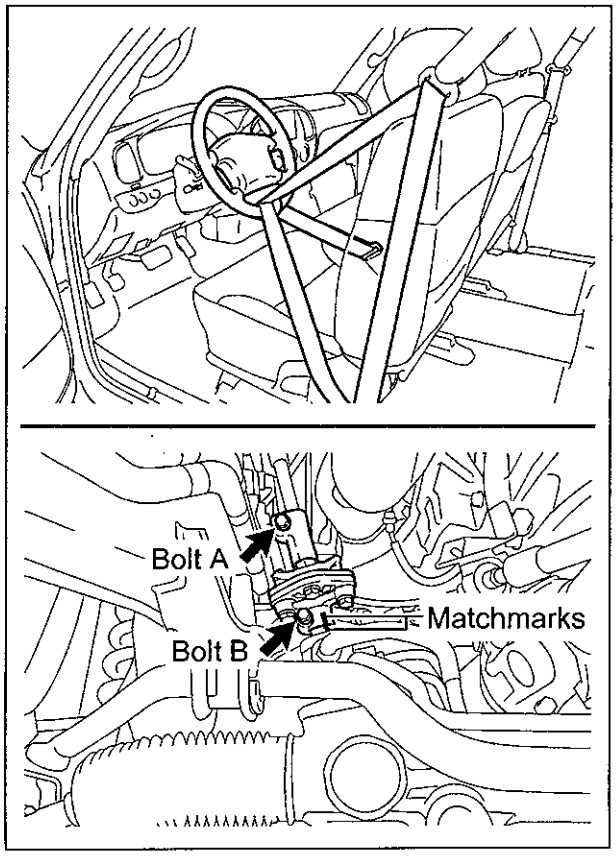

26. DISCONNECT THE NO. 2 INTERMEDIATE SHAFT

NOTE:
Use precaution when performing this step, as you will need to work underneath the vehicle.

a) Make sure the front wheels are in a straight-ahead position and the steering wheel is centered.
b) Using the seat belt, hold the steering wheel in position as shown in the illustration, in order to prevent damage to the spiral cable.
c) Place matchmarks on the No. 2 intermediate shaft and control valve shaft.
d) Loosen bolt "A" and remove bolt "B".
e) Disconnect the No. 2 intermediate shaft from the control valve shaft.

NOTE:
If the No. 2 intermediate shaft assembly is stuck, tap it from below with a brass hammer to disconnect it.

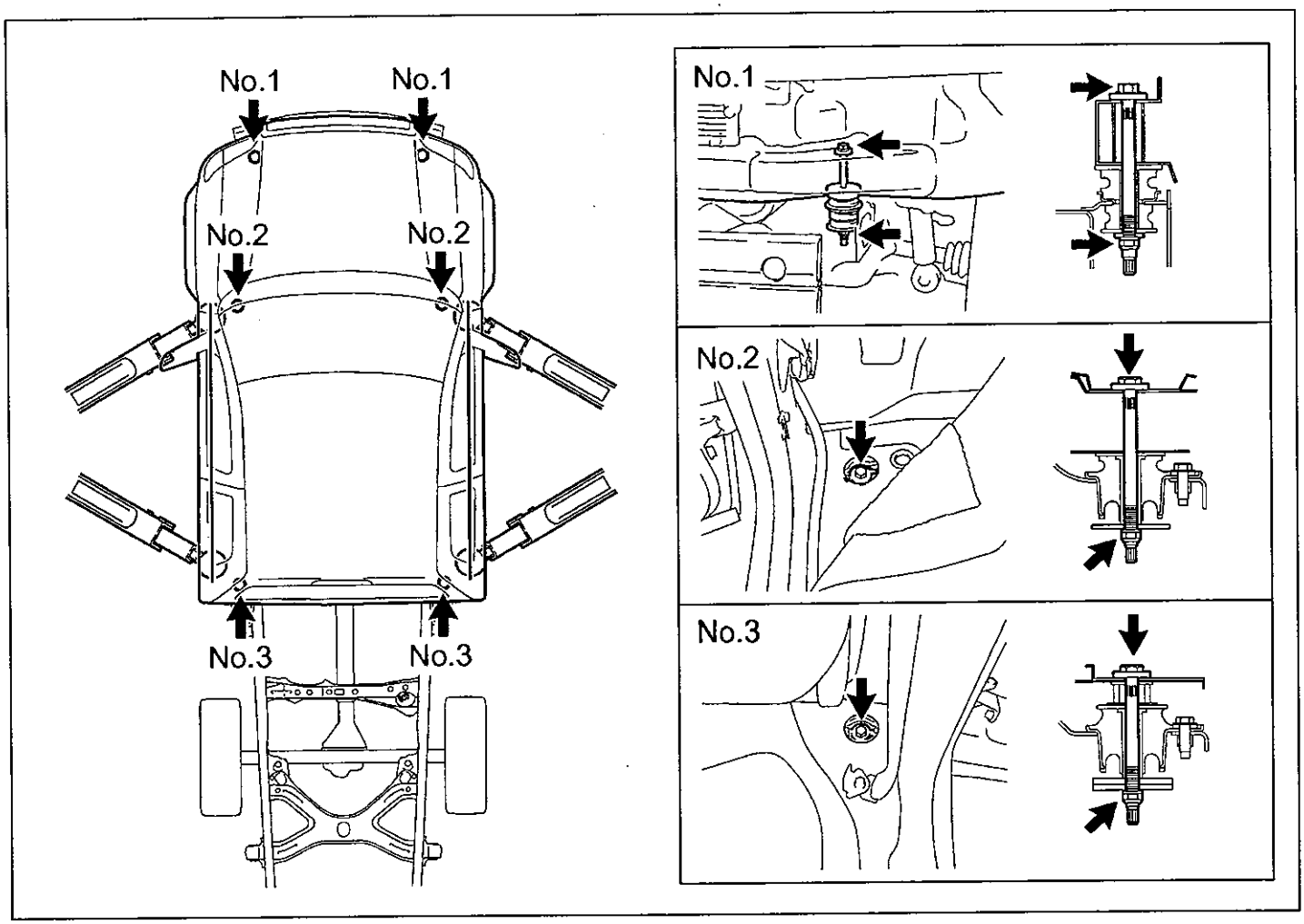

27. REMOVE THE CAB BODY ASSEMBLY USING AN ABOVE GROUND LIFT

a) Remove the 6 nuts and 6 washers.
b) Set the lift arms under the cab body assembly so they **DO NOT** interfere with the frame or cab mounts.
c) Check that all wire harnesses, hoses, cables and the steering shaft are disconnected.
d) Lift the cab assembly up slowly, making sure it does not interfere with anything while being raised.
e) Raise the cab assembly high enough so that the top of the engine clears the lowest point of the cab assy.
f) Pull the frame assembly out from under the vehicle.
g) Lower the cab assembly all the way down and leave it on the lift.

NOTE:

- **Center the cab assembly weight on the lift arms so that it does not slant/tilt to one side.**
- **Raise the cab assembly slightly off the frame and verify that it is held securely by the lift arms.**
- **DO NOT work directly underneath the vehicle when pulling the frame assembly out from under.**
- **DO NOT remove the cab mount bolts, as they will be used as guides during cab assembly reinstallation process.**

E. DISASSEMBLE THE FRAME

1. PLACE THE FRAME ON A LIFT

a) Place the frame on the lift, and secure it with a ratcheting tie down strap. This will prevent the frame from tilting or falling off as parts are removed.

- **Ratcheting Tie Downs: Qty 1**
  - **Length: 2 in X 27 ft**
  - **Minimum Work Load Capacity: 3,000 lbs**

2. REMOVE THE FOLLOWING PARTS

- Spare Tire
- Front Propeller Shaft ***(4WD Only)***
- Rear Propeller Shaft
  - Insert **SST 09325-40010** into the transmission after the rear propeller shaft is removed to prevent oil leakage ***(2WD Only)***

NOTE:
Make sure to place matchmarks on the front (if equipped) and rear propeller shafts prior to removal.

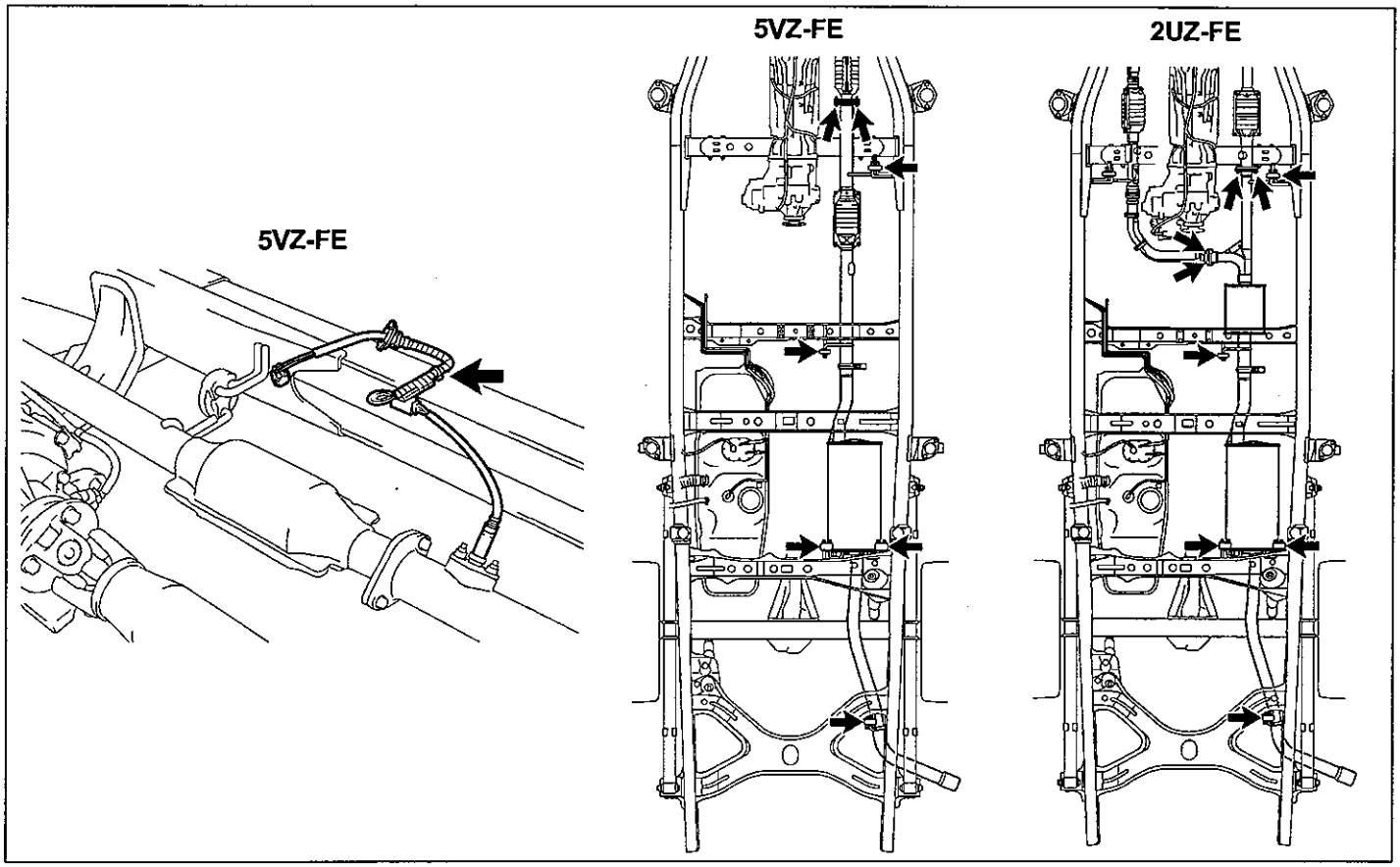

3. REMOVE THE EXHAUST SYSTEM

a) Disconnect the oxygen sensor wire harness clamp (***5VZ-FE Only***).
b) Remove the 4 bolts and 2 flange retainers (***2UZ-FE Only***).
c) Remove the 2 bolts and flange retainer (***5VZ-FE Only***).
d) Remove the exhaust and exhaust pipe supports.
e) Remove the exhaust pipe gasket(s).

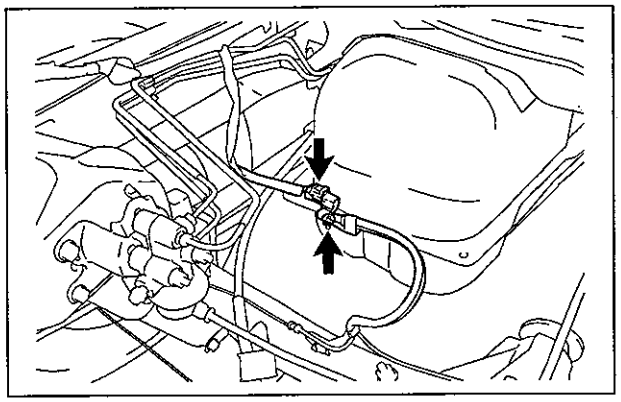

4. DISCONNECT THE REAR SPEED SENSOR CONNECTOR (ABS EQUIPPED VEHICLES ONLY)

a) Remove the nut and disconnect the rear speed sensor connector.

5. REMOVE THE FOLLOWING PARTS

- Fuel Tank Straps
- Fuel Tank
- Charcoal Canister Assy ***(Only For Vehicles Produced After August 2002)***

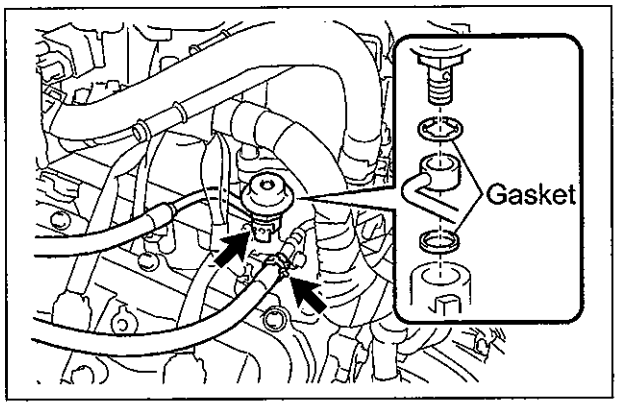

6. DISCONNECT THE FUEL TUBES AND HOSES

For 2UZ-FE Vehicles:

a) Remove the pulsation dumper with **SST 09612-24011**, and disconnect the fuel main hose.
b) Remove the 2 gaskets.
c) Remove the clip and disconnect the fuel return hose.

NOTE:

- **Put a shop towel under the delivery pipe to catch any spilled fuel.**
- **Slowly loosen the pulsation dumper.**

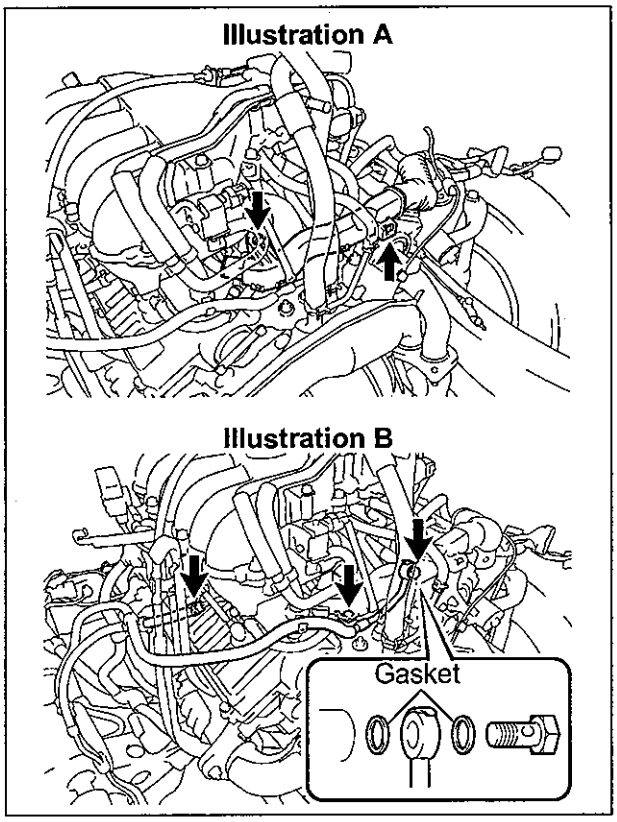

For 5VZ-FE Vehicles:

a) Remove the bolt and wire harness clamp (Illustration A).
b) Remove the bracket bolt (Illustration B).
c) Remove the union bolt and the main fuel pipe (Illustration B).
d) Remove the 2 gaskets (Illustration B).
e) Remove the clip and disconnect the fuel return hose (Illustration B).

7. **REMOVE AND SET ASIDE THE POWER STEERING PUMP ASSY**

a) Remove the drive belt.
b) Disconnect the connector (***5VZ-FE Only***).
c) Remove the 2 bolts and the nut (***2UZ-FE Only***) or the bolt and the nut (***5VZ-FE Only***) and the power steering vane pump.

NOTE:
- **DO NOT disconnect the power steering pump hoses or tubes.**
- **Make sure to keep the power steering pump reservoir in an upright position to prevent the fluid from leaking out.**

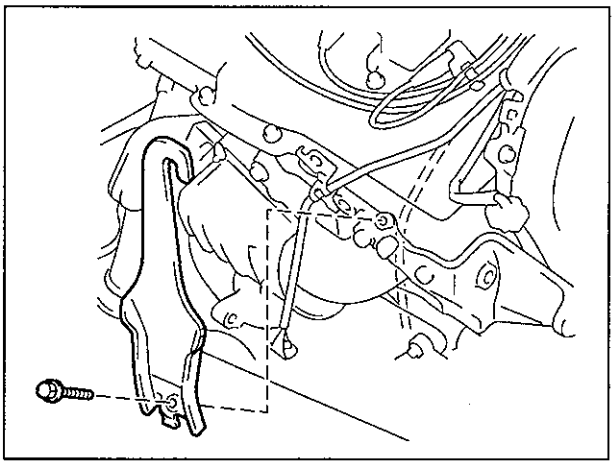

8. **REMOVE THE ENGINE AND TRANSMISSION ASSY (5VZ-FE ONLY)**

a) Disconnect and remove the necessary items/parts to prepare the engine and transmission assy for removal.
b) Install the engine hanger.

For Vehicles Produced On Or Before August 2002):
12282-62050 = Engine Hanger No. 1, Qty: 1
90080-11443 = Bolt, Qty: 1

For Vehicles Produced After August 2002):
12282-62070 = Engine Hanger No. 1, Qty: 1
90119-10684 (90080-11443) = Bolt, Qty: 2

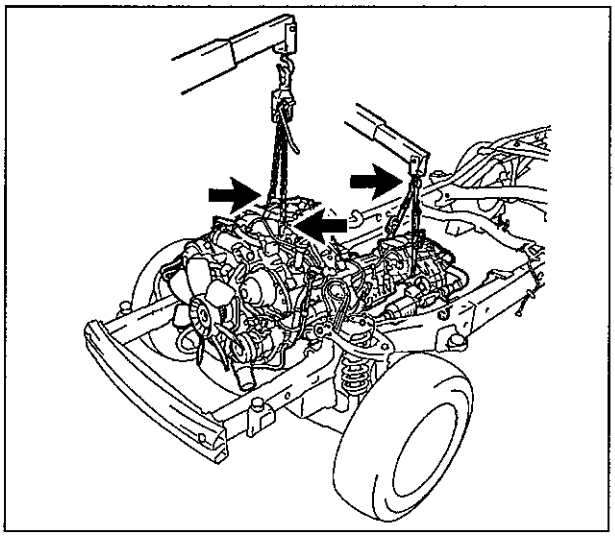

c) Remove the engine and transmission assy.

NOTE:
- **When removing the engine and transmission assy, ALWAYS use 2 engine hoists or mini cranes to lift it.**
- **DO NOT use 1 engine hoist or mini crane to lift the engine and transmission assy, as the unbalanced weight may lead to an accident or injury.**
- **ONLY use engine hoists or mini cranes that can properly support the weight of the engine and transmission assy.**
- **Carefully adjust the 2 engine hoists or mini cranes used so that the engine and transmission assy is properly balanced.**

9. **REMOVE THE WHEELS**

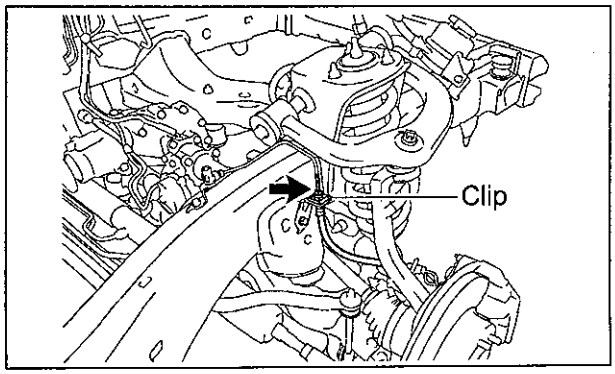

10. **DISCONNECT THE FRONT BRAKE HOSE**

a) Disconnect the front brake tube from the brake hose.
b) Remove the clip and disconnect the front brake hose.
c) Repeat the procedure on the opposite side.

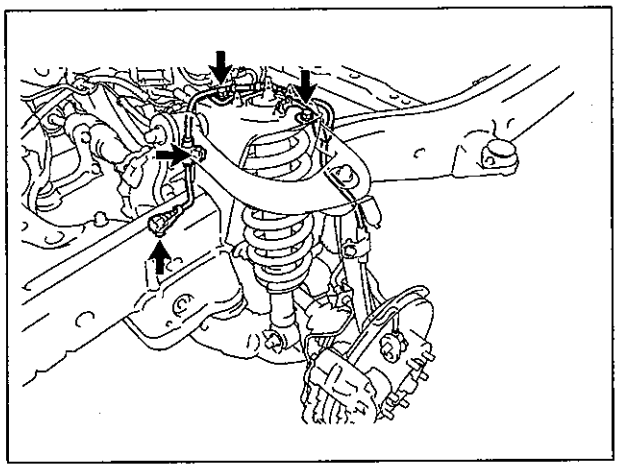

11. DISCONNECT THE FRONT SPEED SENSOR WIRE HARNESS (ABS EQUIPPED VEHICLES ONLY)

a) Remove the 2 bolts, 2 clamps and the connector.
b) Repeat the procedure on the opposite side.

12. REMOVE THE FOLLOWING PARTS

- Front Stabilizer Bar
- Front Axle Shaft Nut (***4WD Only***)
- The Tie Rod End
  - Remove the cotter pin and nut.
  - Using the **SST 09610-20012**, disconnect the tie rod end.
- Lower Ball Joint
  - Remove the cotter pin and nut.
  - Using the **SST 09628-62011**, disconnect the lower ball joint.

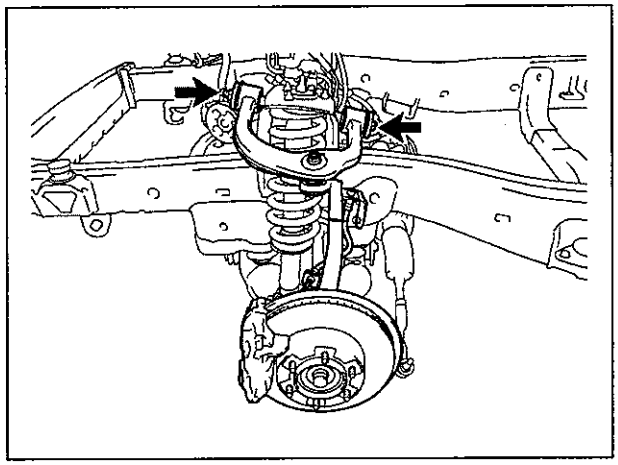

13. REMOVE THE FRONT SUSPENSION UPPER ARM AND STEERING KNUCKLE ASSY

a) Remove the bolt, nut, 2 washers and front suspension upper arm w/ steering knuckle.
b) Repeat the procedure on the opposite side.

NOTE:
If the drive shaft is difficult to disconnect, tap the drive shaft loose with a plastic hammer.

14. DRAIN THE FRONT DIFFERENTIAL OIL (4WD ONLY)

15. REMOVE THE FOLLOWING PARTS

- Front Shock Absorber
- Power Steering Link Assembly w/ Power Steering Vane Pump
- Front Drive Shaft (***4WD Only***)
- Front Differential Carrier (***4WD Only***)

NOTE:
- **When removing the power steering link with the vane pump attached, have one person support the power steering link and the other support the vane pump.**
- **Make sure to keep the power steering pump reservoir in an upright position to prevent the fluid from leaking out.**
- **If the drive shaft is difficult to remove tap it with a plastic hammer.**
- **Be careful not to damage the dust cover and oil seal.**

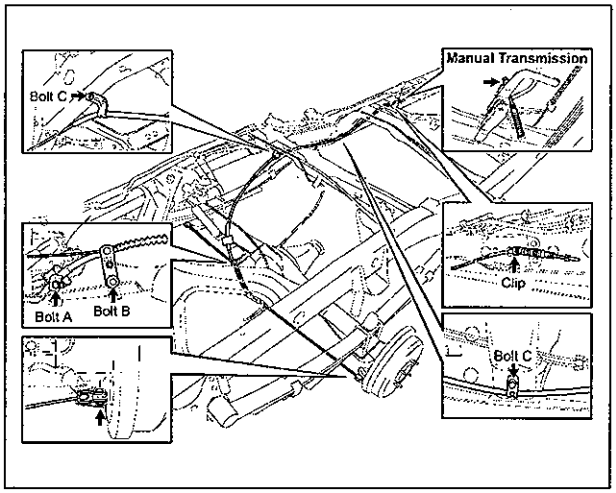

16. REMOVE THE NO.2 PARKING BRAKE CABLE

a) Remove the No. 2 parking brake cable adjustment nut (***Manual Transmission Vehicles Only***).
b) Remove the clip.
c) Remove the 2 clips and 2 pins.
d) Remove the 4 bolts and No.2 parking brake cable.

17. REMOVE THE PARKING BRAKE INTERMEDIATE LEVER (MANUAL TRANSMISSION VEHICLES ONLY)

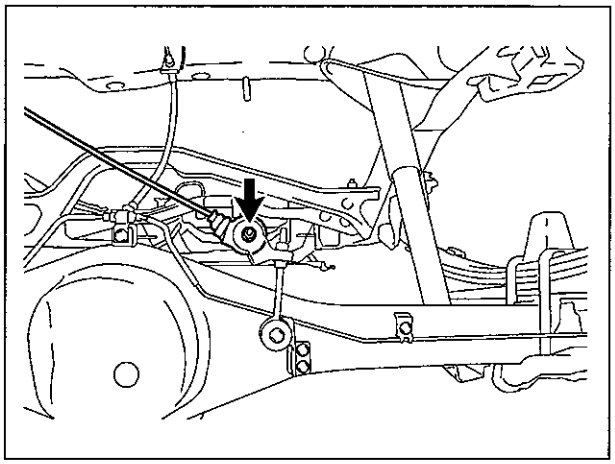

18. DISCONNECT THE LOAD SENSING SPRING ASSY (LSPV EQUIPPED VEHICLES ONLY)

a) Remove the bolt, washer, nut and disconnect the load sensing spring assy.

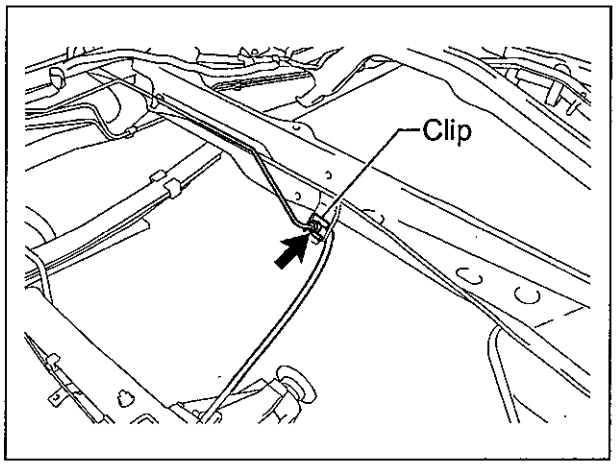

19. DISCONNECT THE BRAKE HOSE

a) Disconnect the No.4 rear brake tube.
b) Remove the clip and disconnect the brake hose.

20. REMOVE THE FOLLOWING PARTS

- Rear Stabilizer Bar (***If Equipped***)
- Rear Shock Absorbers
- Rear Differential Assy
- Spare Tire Carrier

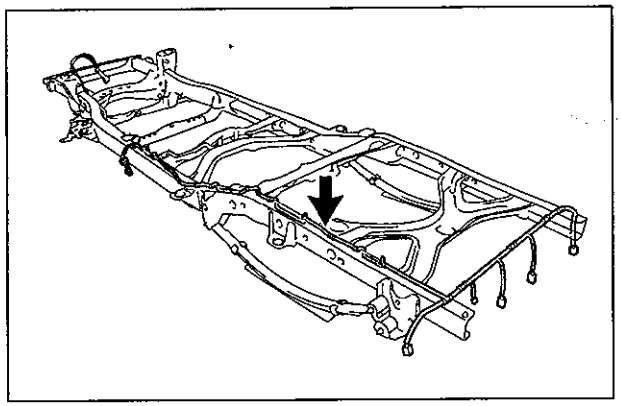

21. REMOVE THE FRAME WIRE HARNESS

a) Remove the bolt and disconnect the ground wire ***(If Equipped)***.
b) Disconnect the clamps and remove the frame wire harness.

NOTE:
- **The number of wire harness clamps will differ depending on the vehicle specification.**
- **Take care not to damage or break the wire harness clamps during removal.**

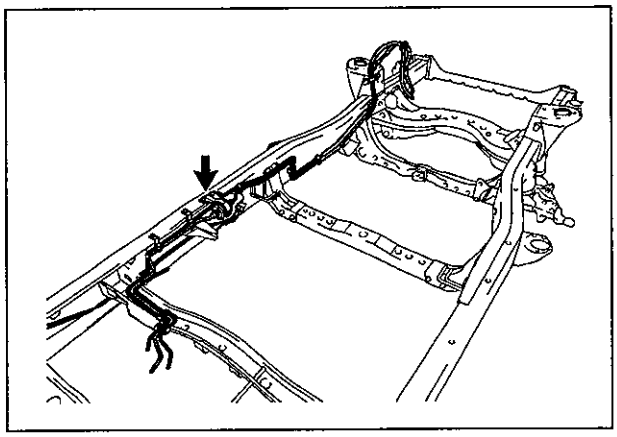

22. REMOVE THE FUEL TUBES

a) Remove the bolts, clamps and fuel tubes.

NOTE:
- **The number of fuel tube clamps will differ depending on the vehicle specification.**
- **If the fuel tube clamp(s) are damaged replace them.**

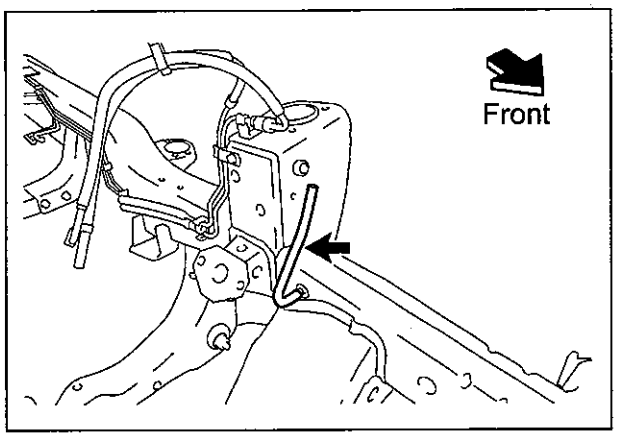

23. REMOVE THE CHARCOAL CANISTER VENT HOSE (ONLY FOR VEHICLES PRODUCED ON OR BEFORE AUGUST 2002)

a) Remove the charcoal canister vent hose and plug.

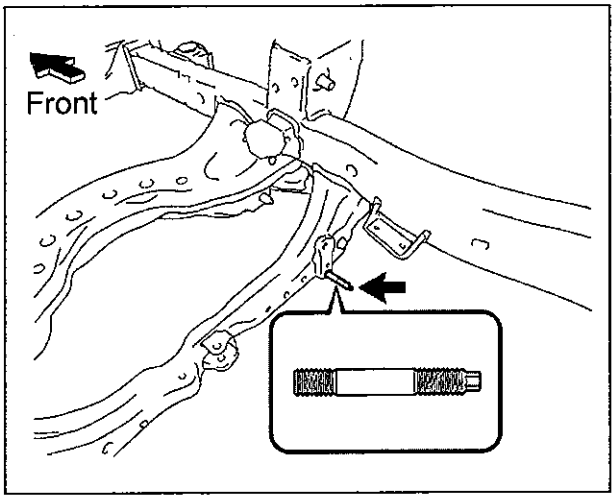

24. REMOVE THE STUD BOLT

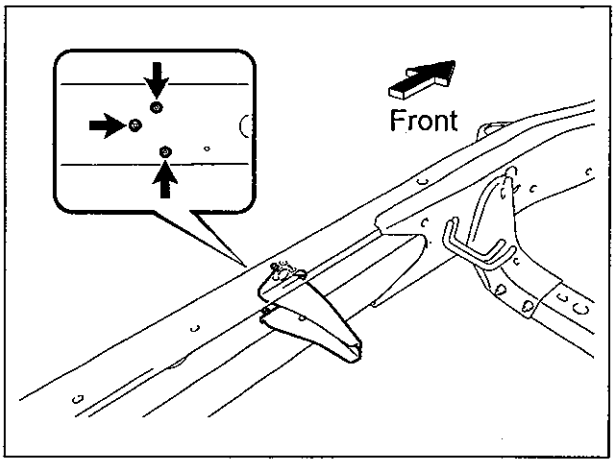

25. REMOVE THE PARKING BRAKE CABLE SUPPORT BRACKET

a) Remove the 3 nuts and parking brake cable support bracket.

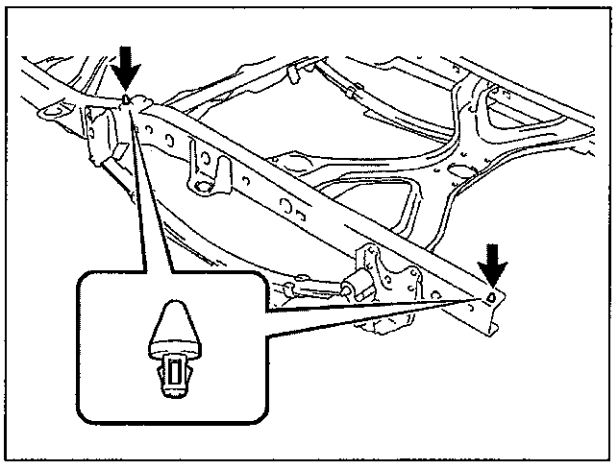

26. REMOVE THE CLIPS

27. REMOVE THE FOLLOWING PARTS

- Transport / Toe Hooks (Qty: 2)
- Front Bumper reinforcement
- Front Suspension lower Arm
- Front Spring Bumper
- Cab Mounts (Qty: 6)
- Rear Leaf Springs

28. REMOVE THE FRAME FROM THE LIFT

a) Remove the ratcheting tie down strap and the frame from the lift.

F. ASSEMBLE THE NEW FRAME

1. PLACE THE NEW FRAME ON THE LIFT

a) Place the ***NEW*** frame on the lift, and secure it with a ratcheting tie down strap. This will prevent the frame from tilting or falling off as parts are installed.

- **Ratcheting Tie Downs: Qty 1**
  - **Length: 2 in X 27 ft**
  - **Minimum Work Load Capacity: 3,000 lbs**

NEW Replacement Parts

Part Number	Part Name	Kit #	Qty
04483-0C030	Shackle Kit, Rear Spring	NA*	2
90105-14132	Bolt	4-6	6
90179-14039	Nut	1-3	6
90201-14025	Washer	1-3	6

* Individual part(s)

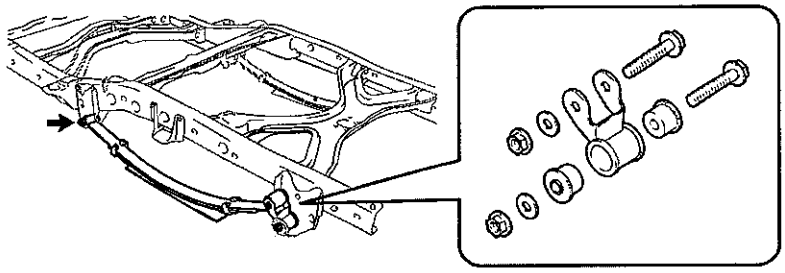

2. REINSTALL THE REAR LEAF SPRINGS

a) Reinstall the rear leaf spring with all ***NEW*** parts (shackle, bushings, bolts, washers & nuts) and torque to spec.

Torque Spec: 170 N·m (1733 kgf·cm, 125 ft·lbf)

b) Repeat the procedure on the opposite side.

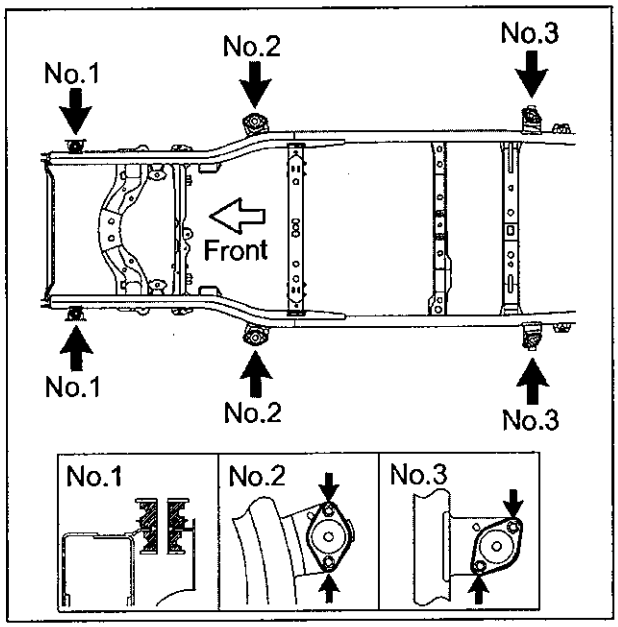

3. REINSTALL THE CAB MOUNTS

a) Reinstall cab mounts No. 1
b) Reinstall cab mounts No. 2 & No. 3 with 2 bolts each, and torque to spec.

Torque Spec: 61 N·m (622 kgf·cm, 45 ft·lbf)

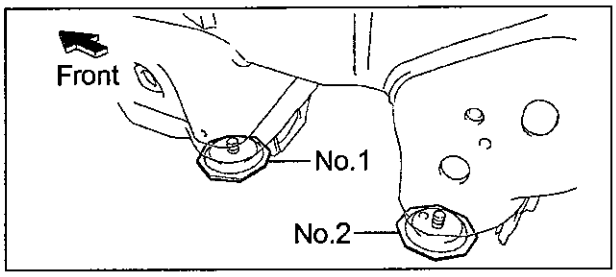

4. REINSTALL THE CAB MOUNTS

a) Install the No.1 and No.2 front spring bumpers to the frame and torque to spec.

Torque Spec: 31 N·m (316 kgf·cm, 23 ft·lbf)

b) Repeat the procedure on the opposite side.

NEW Replacement Parts

Part Number	Part Name	Kit #	Qty
48409-34020	Cam Sub-Assy, Front Suspension Toe Adjust	1-3	2
48409-34030	Cam Sub-Assy, Front Suspension Toe Adjust, No. 2	1-3	2
48452-35020	Plate, Front Suspension Toe Adjust, No. 2	1-3	4
90080-11275	Bolt	4-6	2
90080-11410	Bolt	4-6	2

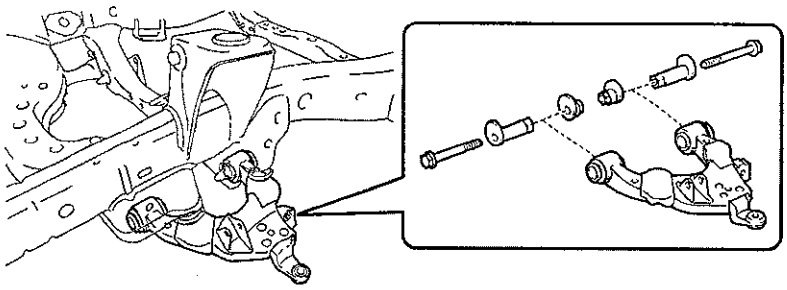

5. REINSTALL THE FRONT SUSPENSION LOWER ARM

a) Reinstall the front suspension lower arm with 2 ***NEW*** bolts, 2 ***NEW*** toe adjustment plates 2 ***NEW*** toe adjustment cam, then torque to spec.

Torque Spec:
- **For Vehicles Produced On Or Before August 2002 - 130 N·m (1325 kgf·cm, 95 ft·lbf)**
- **For Vehicles Produced After August 2002 - 140 N·m (1427 kgf·cm, 103 ft·lbf)**

b) Repeat the procedure on the opposite side.

NEW Replacement Parts

Front Bumper Reinforcement

Part Number	Part Name	Kit #	Qty
90178-10024	Nut	1-3	4

6. REINSTALL THE FOLLOWING PARTS

- Front Bumper Reinforcement
  - Reinstall with 4 ***NEW*** nuts.
  - **Torque Spec: 50 N·m (509 kgf·cm, 36 ft·lbf)**
- Transport / Toe Hooks (Qty: 2)
  - **Torque Spec: 95 N·m (968 kgf·cm, 70 ft·lbf)**

NEW Replacement Parts

Part Number	Part Name	Kit #	Qty
90467-13076	Clip	1-3	2

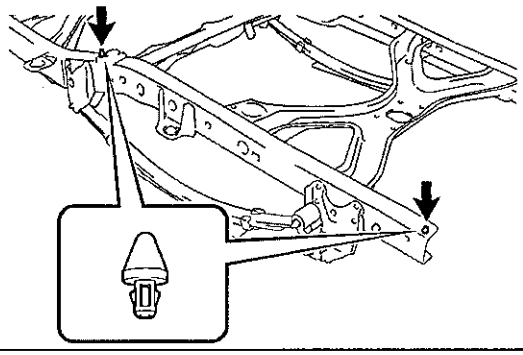

7. INSTALL THE *NEW* CLIPS

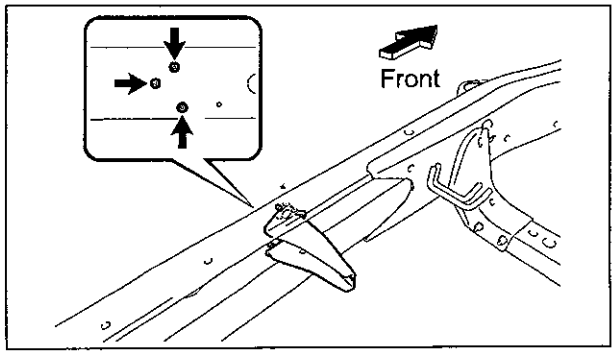

8. REINSTALL THE PARKING BRAKE CABLE SUPPORT BRACKET

a) Reinstall the parking brake cable support bracket with the 3 nuts, and torque to spec.

Torque Spec: 13 N·m (132 kgf·cm, 10 ft·lbf)

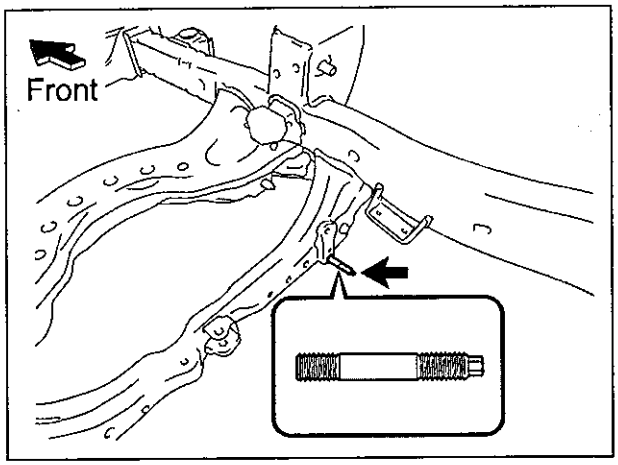

9. REINSTALL THE STUD BOLT

a) Reinstall the stud bolt and torque to spec.

Torque Spec: 20 N·m (203 kgf·cm, 14 ft·lbf)

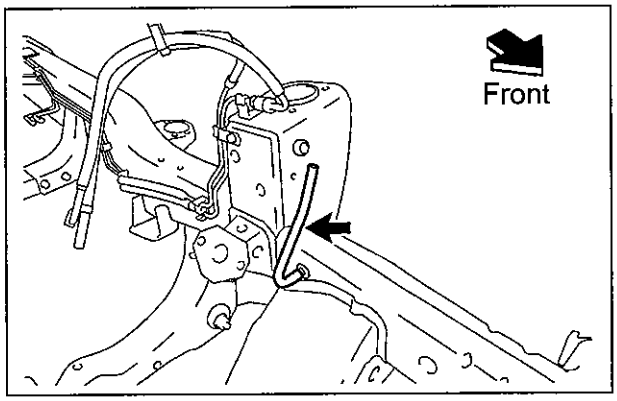

10. REINSTALL THE CHARCOAL CANISTER VENT HOSE (ONLY FOR VEHICLES PRODUCED ON OR BEFORE AUGUST 2002)

a) Reinstall the charcoal canister plug and vent hose.

NEW Replacement Parts

Part Number	Part Name	Kit #	Qty
47323-0C011	Tube, Rear Brake, No.3**	NA*	1
47323-0C012		NA*	1
47324-0C011	Tube, Rear Brake, No.4**	7, 9	1
47324-0C012		8, 10	1
47324-0C013	Tube, Rear Brake, No.4 with ABS	11	1
90949-01B60	Clamp, Brake Tube No. 6	1	5
90949-01B61	Clamp, Brake Tube No. 7**	1	1
90949-01C33		2-3	1
90949-01C06	Clamp, Brake Tube No. 8	2-3	5
47361-0C011	Tube, Rear Brake, No.10**	NA*	1
47361-0C012		NA*	1
90904-12068	Way (for front brake tube)	1-3	1
90949-01B59	Clamp**	1	1
90949-01C32		2-3	1
91621-B0816	Bolt	1-2	1
90080-11180	Bolt - with ABS	9-11	1

* Individual part(s)
** Only 1 part is used. The part number varies depending on the Kit #

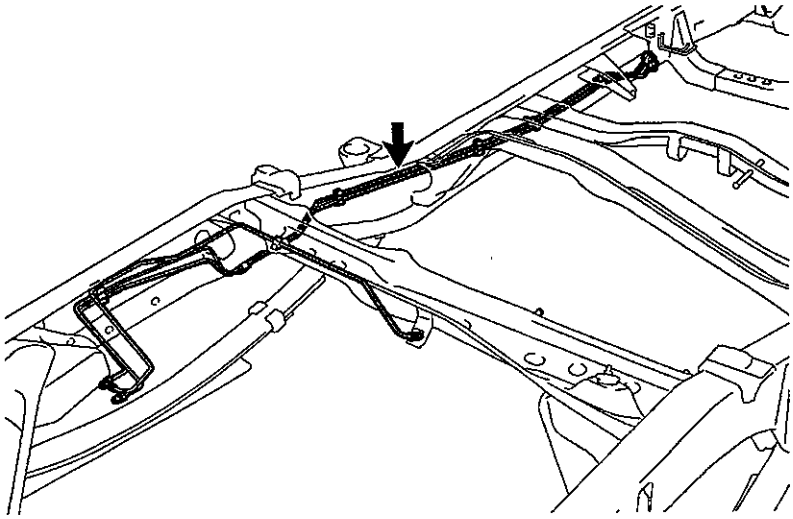

11. INSTALL THE *NEW* REAR BRAKE TUBES

a) Install the ***NEW*** rear brake tubes with the ***NEW*** clamp(s) and the ***NEW*** bolt, then torque to spec.

Torque Spec: Bolt - 28 N·m (285 kgf·cm, 20 ft·lbf)
Brake Tube - 15 N·m (153 kgf·cm, 11 ft·lbf)

NEW Replacement Parts

Part Number	Part Name	Kit #	Qty
77285-34280	Clamp, Fuel Tube, No. 1	3	2
77285-34290		3	1
77285-34300		3	1
77285-34310		3	1
90080-11180	Bolt	6	4

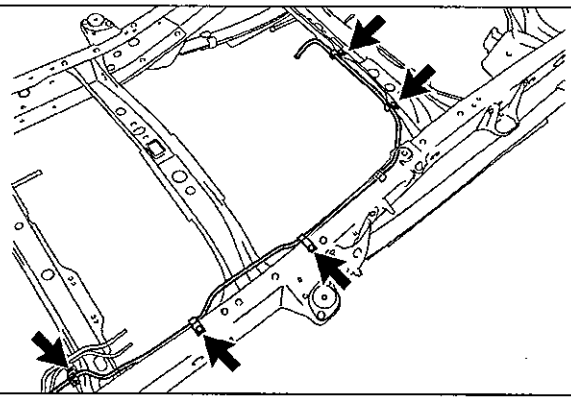

12. REINSTALL THE CHARCOAL CANISTER TUBE (ONLY FOR VEHICLES PRODUCED AFTER AUGUST 2002)

a) Reinstall the charcoal canister tube with ***NEW*** clamps and ***NEW*** bolts, then torque to spec.

Torque Spec: 29 N·m (295 kgf·cm, 21 ft·lbf)

NOTE:
The number of clamps will differ depending on the vehicle spec.

NEW Replacement Parts

2000 - 2002 MY

Part Number	Part Name	Kit #	Qty
77285-34030	Clamp, Fuel Tube, No. 1**	1	4
77285-34031		2	4
77285-34040		1	1
77285-34041		2	1
77285-34050		1	1
77285-34051		2	1
77285-34070		1	1
77285-34071		2	2
77285-34060	Clamp, Fuel Tube, No. 1	1-2	2
77285-34080		1-2	1
90080-11180	Bolt	4-5	6

** Only 1 part is used. The part number varies depending on the Kit #

2003 MY

Part Number	Part Name	Kit #	Qty
77285-34031	Clamp, Fuel Tube, No. 1	3	4
77285-34060		3	1
77285-34071		3	2
77285-34080		3	1
77285-34260		3	1
77285-34270		3	1
90080-11180	Bolt	6	6

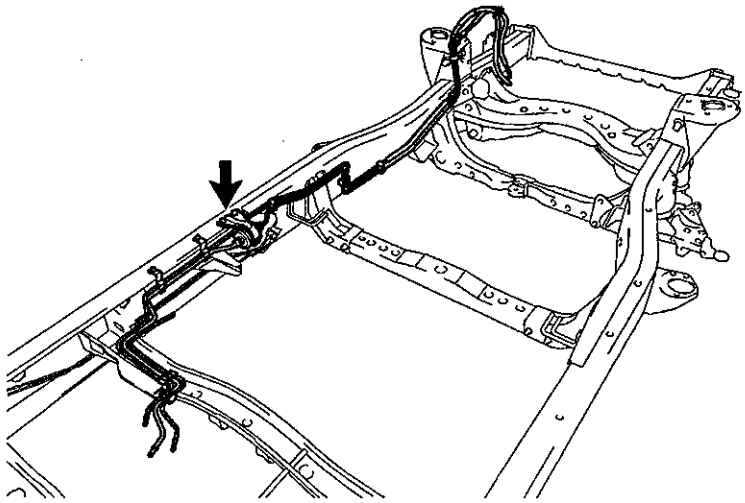

13. REINSTALL THE FUEL TUBES

a) Reinstall the fuel tubes with the ***NEW*** clamps and ***NEW*** bolts, then torque to spec.

Torque Spec: Filter Bracket Bolt - 20 N·m (203 kgf·cm, 14 ft·lbf)
Clamp Bolt - 29 N·m (295 kgf·cm, 21 ft·lbf)

NOTE:
The number of clamps will differ depending on the vehicle spec.

14. REINSTALL THE FRAME WIRE HARNESS

a) Reconnect the clamps to reinstall the frame wire harness.
b) Reconnect the ground wire with the bolt and torque to spec.

Torque Spec: 30 N·m (305 kgf·cm, 22 ft·lbf)

NOTE:

- **If the wire harness clamp(s) are damaged, repair them following the steps below.**
- **The number of wire harness clamps will differ depending on the vehicle spec.**

2000 – 2002 MY NEW Replacement Parts

Part Number	Part Name	Kit #	Qty
82711-1E320	Support, Wire Harness	1-2	1
82711-1E360		1-2	1
82711-21020		1-2	1
82711-26380		1-2	15
82711-3A640		1-2	1
82711-3F050		1-2	3

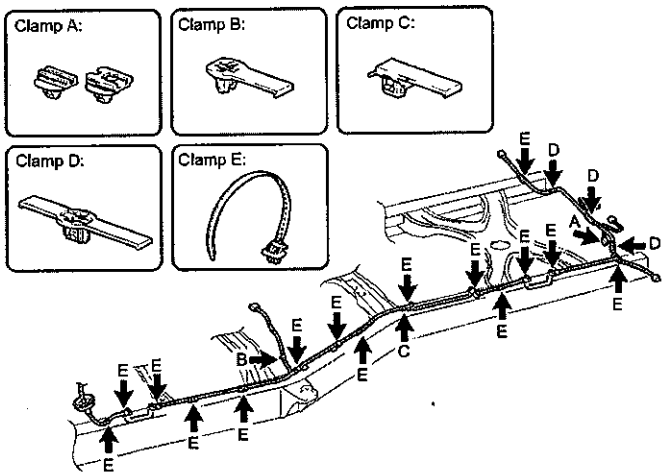

2003 MY NEW Replacement Parts

Part Number	Part Name	Kit #	Qty
82711-16830	Support, Wire Harness	3	3
82711-26380		3	15
82711-3A640		3	1
82711-3F050		3	3

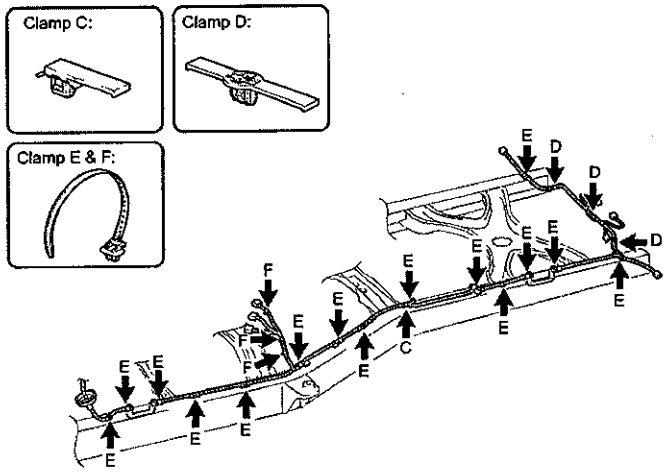

Clamp B, C & D

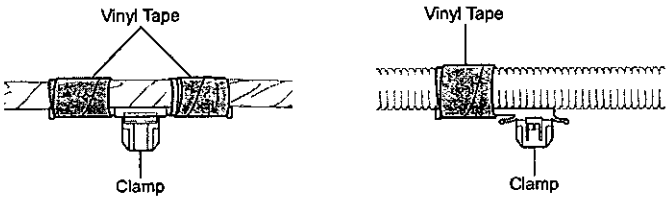

Clamp E & F

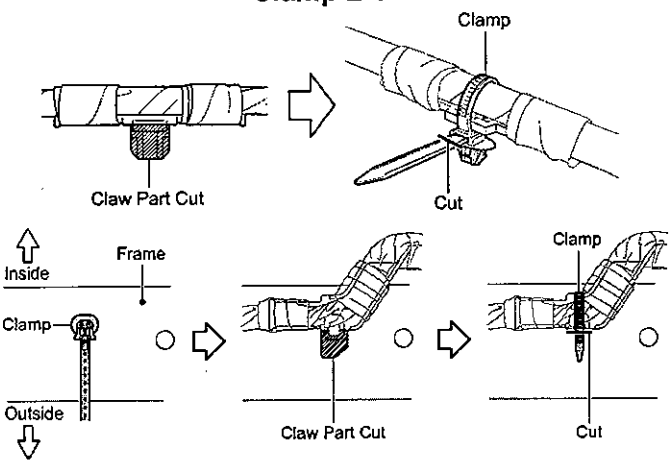

REPAIR PROCEDURE FOR CLAMP A

a) Remove the damaged clamp.
b) Install the ***NEW*** clamp to the frame wire harness connector.

REPAIR PROCEDURE FOR CLAMP B, C & D

a) Remove the damaged clamp.
b) Install the ***NEW*** clamp to the frame wire harness with vinyl tape as shown in the illustration.

REPAIR PROCEDURE FOR CLAMP E & F

a) Install the replacement ***NEW*** clamp to the frame in the direction shown in the illustration.
b) Cut the damaged clamp as shown in the illustration.
c) Route the clamp through the cutout area of the damaged clamp and fasten securely.

NEW Replacement Parts

Rear Differential Housing

Part Number	Part Name	Kit #	Qty
90179-14019	Nut	1-3	8
90201-15012	Washer	1-3	8

15. REINSTALL THE FOLLOWING PARTS

- Rear Differential Assy
  - Reinstall with the 4 U -bolts, 2 spring seats, 2 spring bumpers, 8 ***NEW*** mounting nuts and 8 ***NEW*** washers, then torque to spec.
  - **Torque Spec: 133 N·m (1356 kgf·cm, 98 ft·lbf)**
- Rear Shock Absorber
  - Reinstall with the bolt, 2 nuts, 3 retainers and 2 cushions, then torque to spec.
  - **Torque Spec: Bolt - 87 N·m (887 kgf·cm, 64 ft·lbf)**
    Nut - 20 N·m (203 kgf·cm, 14 ft·lbf)
  - Repeat the procedure on the opposite side.
- Rear Stabilizer Bar ***(If Equipped)***
  - Reinstall with the 2 brackets and 4 bolts, then torque to spec.
  - **Torque Spec: 29 N·m (295 kgf·cm, 21 ft·lbf)**
  - Reconnect the stabilizer bar links with the 4 nuts, then torque to spec.
  - **Torque Spec: 50 N·m (509 kgf·cm, 36 ft·lbf)**

NEW Replacement Parts

Part Number	Part Name	Kit #	Qty
90468-08035	Clip	1-3	1

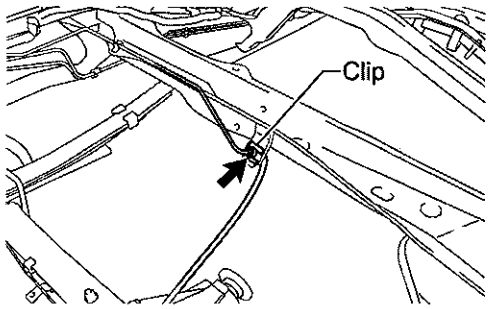

16. RECONNECT THE BRAKE HOSE

a) Reconnect the brake hose with a ***NEW*** clip.
b) Reconnect the No.4 rear brake tube and torque to spec.

Torque Spec: 15 N·m (153 kgf·cm, 11 ft·lbf)

NEW Replacement Parts

Part Number	Part Name	Kit #	Qty
47910-34060	Valve Assy, Load Sensing Proportioning - without ABS	12	1
47910-34070	Valve Assy, Load Sensing Proportioning - with ABS	13	1
47926-35010	Spacer, Load Sensing Valve	12-13	1
47931-34020	Bracket, Load sensing Valve	1-3	1
47937-60010	Plate, Load Sensing Valve Set	1-3	1
90080-11180	Bolt	4-6	3

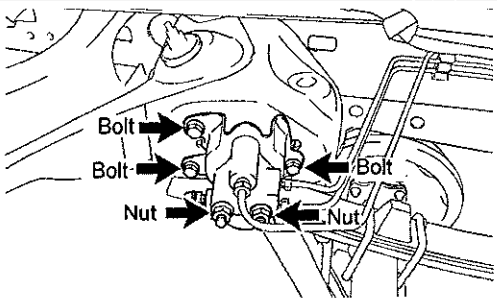

17. INSTALL THE *NEW* LSPV AND LOAD SENSING SPRING (LSPV EQUIPPED VEHICLES ONLY)

a) Install the ***NEW*** LSPV with the following ***NEW*** parts and reuse all other components, then torque to spec.

- ***NEW*** LSPV Bracket
- ***NEW*** Set Plate
- ***NEW*** Spacer
- 3 ***NEW*** Bolts

Torque Spec: Bolt - 29 N·m (295 kgf·cm, 21 ft·lbf)
Nut - 30 N·m (305 kgf·cm, 22 ft·lbf)

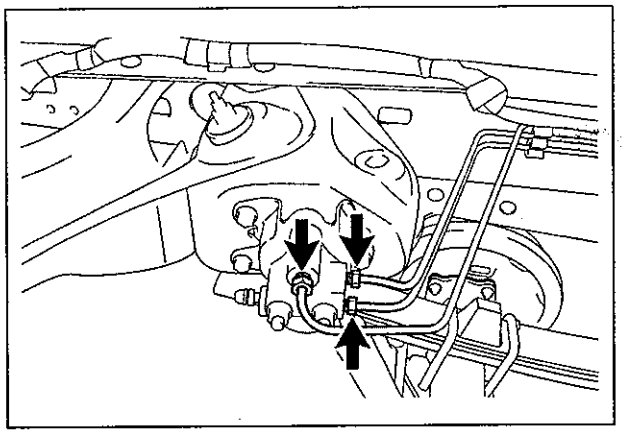

b) Connect the 3 ***NEW*** rear brake tubes to the ***NEW*** LSPV and torque to spec.

Torque Spec: 15 N·m (153 kgf·cm, 11 ft·lbf)

NEW Replacement Parts

Part Number	Part Name	Kit #	Qty
47920-34040	Spring Assy, Load Sensing	12-13	1
90467-31110	Clip (For Load Sensing Valve Boot)	12-13	1

c) Install the ***NEW*** load sensing spring with a ***NEW*** clip and reuse all other components, then torque nut to spec.

Torque Spec: 18 N·m (183 kgf·cm, 13 ft·lbf)

18. REINSTALL THE PARKING BRAKE INTERMEDIATE LEVER (MANUAL TRANSMISSION VEHICLES ONLY)

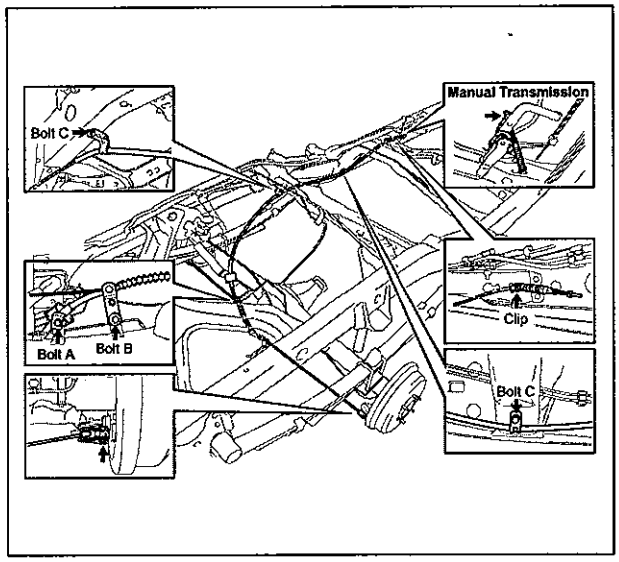

19. REINSTALL THE NO.2 PARKING BRAKE CABLE

a) Reinstall the No.2 parking brake cable with the 4 bolts, and torque to spec.

Torque Spec: Bolt A - 13 N·m (132 kgf·cm, 10 ft·lbf)
Bolt B - 16 N·m (163 kgf·cm, 12 ft·lbf)
Bolt C - 26 N·m (265 kgf·cm, 19 ft·lbf)
Nut - 13 N·m (132 kgf·cm, 10 ft·lbf)

b) Reinstall the 2 pins and 2 clips.
c) Reinstall the clip.
d) Reinstall the No. 2 parking brake cable adjustment nut and torque to spec (***Manual Transmission Vehicles Only***).

Torque Spec: 13 N·m (132 kgf·cm, 10 ft·lbf)

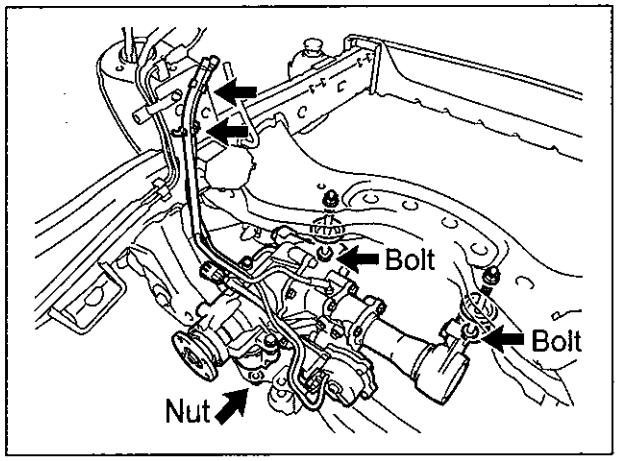

20. REINSTALL THE FRONT DIFFERENTIAL CARRIER (4WD ONLY)

a) Reinstall the front differential carrier with the 2 bolts, 4 stoppers and 3 nuts, then torque to spec.

Torque Spec: Bolt - 137 N·m (1397 kgf·cm, 101 ft·lbf)
Nut - 87 N·m (887 kgf·cm, 64 ft·lbf)

b) Reinstall the breather tube with the 2 clips.

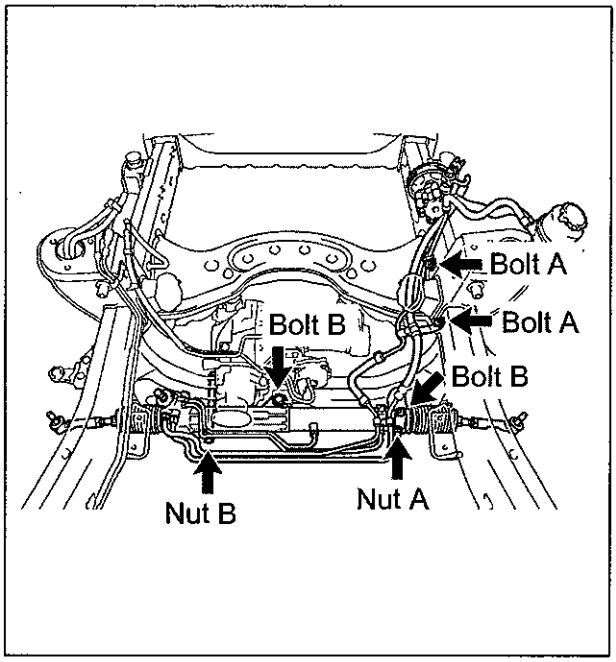

21. REINSTALL THE POWER STEERING LINK ASSEMBLY W/ POWER STEERING VANE PUMP

a) Reinstall the power steering link assembly w/ power steering vane pump with the bolts and nuts, then torque to spec.

Torque Spec: Bolt A - 29 N·m (295 kgf·cm, 21 ft·lbf)
Bolt B - 165 N·m (1682 kgf·cm, 121 ft·lbf)
Nut A - 165 N·m (1682 kgf·cm, 121 ft·lbf)
Nut B - 130 N·m (1325 kgf·cm, 95 ft·lbf)

NOTE:

- **When reinstalling the power steering link with the vane pump attached, have one person support the power steering link and the other support the vane pump.**
- **Make sure to keep the power steering pump reservoir in an upright position to prevent the fluid from leaking out.**

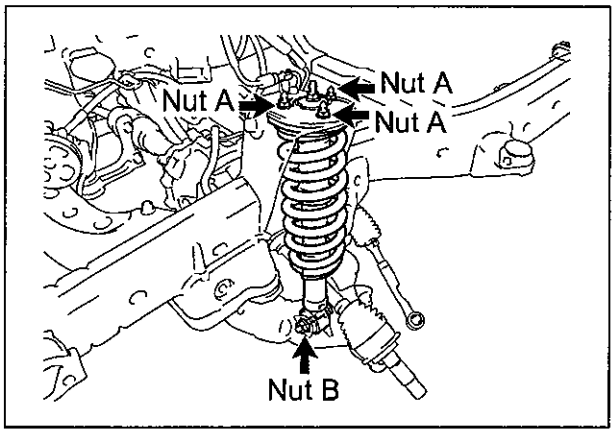

22. REINSTALL THE FRONT SHOCK ABSORBER

a) Reinstall the front shock absorber with the bolt and 4 nuts, then torque to spec.

Torque Spec: Nut A - 64 N·m (652 kgf·cm, 47 ft·lbf)
Nut B - 135 N·m (1376 kgf·cm, 99 ft·lbf)

b) Repeat the procedure on the opposite side.

NEW Replacement Parts

Part Number	Part Name	Kit *	Qty
43425-04020	Ring, Shaft Snap (For Front Drive Inner Shaft Outer)	NA*	2

* Individual part(s)

23. REINSTALL THE FRONT DRIVE SHAFT (4WD ONLY)

a) Install a ***NEW*** snap ring.
b) Reinstall the front drive shaft.
c) Repeat the procedure on the opposite side.

NOTE:
Be careful not to damage the dust cover and oil seal.

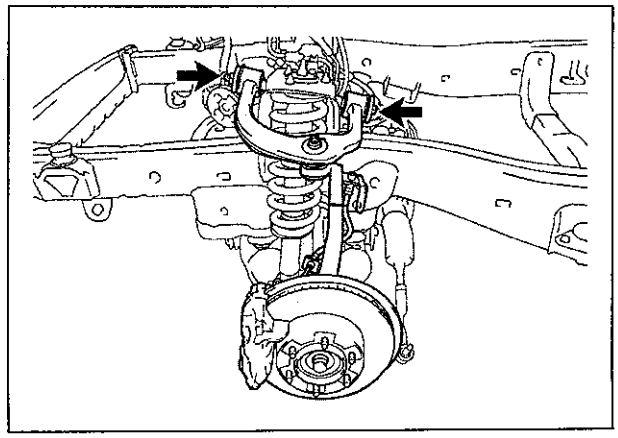

24. REINSTALL THE FRONT SUSPENSION UPPER ARM AND STEERING KNUCKLE ASSY

a) Reinstall the front suspension upper arm w/ steering knuckle with the bolt, nut and 2 washers, then torque to spec.

Torque Spec: 98 N·m (999 kgf·cm, 72 ft·lbf)

b) Repeat the procedure on the opposite side.

NEW Replacement Parts

Lower Ball Joint

Part Number	Part Name	Kit #	Qty
90252-03015	Cotter Pin	1-3	2

Tie Rod End

Part Number	Part Name	Kit #	Qty
95381-03225	Cotter Pin	1-3	2

Front Stabilizer Bar - 2000 MY

Part Number	Part Name	Kit #	Qty
48824-34020	Bracket, Front Stabilizer No. 1 RH	1	1
48829-34010	Bracket, Front Stabilizer No. 1 LH	1	1
90080-11375	Bolt	4	2
90179-08256	Nut	1	2

Front Stabilizer Bar - 2001-2003 MY

Part Number	Part Name	Kit #	Qty
48824-34030	Bracket, Front Stabilizer No. 1 RH	2-3	1
48829-34020	Bracket, Front Stabilizer No. 1 LH	2-3	1
90080-11482	Bolt	5-6	2
90182-10004	Nut	2-2	2

25. REINSTALL THE FOLLOWING PARTS

- Lower Ball Joint
  - Reinstall the lower ball joint with the nut and torque to spec.
  - **Torque Spec: 140 N·m (1427 kgf·cm, 103 ft·lbf)**
  - Install the ***NEW*** cotter pin.
  - Repeat the procedure on the opposite side.
- The Tie Rod End
  - Reinstall the tie rod end with the nut and torque to spec.
  - **Torque Spec: 91 N·m (927 kgf·cm, 67 ft·lbf)**
  - Install the ***NEW*** cotter pin.
  - Repeat the procedure on the opposite side.
- Front Axle Shaft Nut (***4WD Only***)
  - Temporarily reinstall the front axle nut.
  - This nut will be tightened when the vehicle is completed.
  - Repeat the procedure on the opposite side.
- Front Stabilizer Bar
  - Reinstall the stabilizer bar with 2 ***NEW*** brackets, 2 ***NEW*** bolts and 2 ***NEW*** nuts, then torque to spec.
  - **Torque Spec: 37 N·m (377 kgf·cm, 27 ft·lbf)**
  - Reconnect the stabilizer bar links with the 2 nuts, then torque to spec.
  - **Torque Spec: 69 N·m (703 kgf·cm, 50 ft·lbf)**

NEW Replacement Parts

Part Number	Part Name	Kit #	Qty
82666-35200	Holder, Connector	1-3	2
89515-35030	Clamp	1-3	2

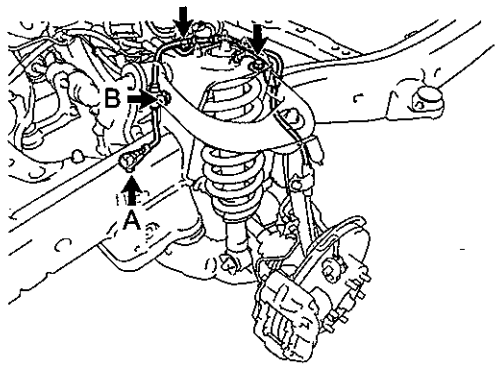

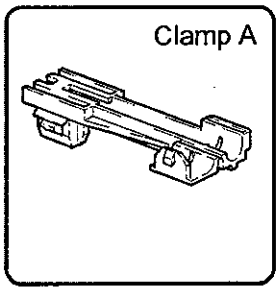

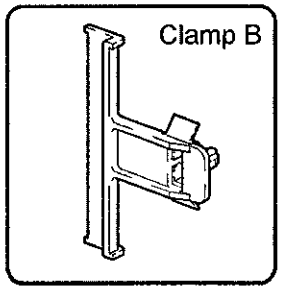

26. RECONNECT THE FRONT SPEED SENSOR CONNECTOR (ABS EQUIPPED VEHICLES ONLY)

a) Reinstall the front speed sensor connector with 2 bolts and 2 ***NEW*** clamps, then torque to spec.

Torque Spec: 8.0 N·m (81 kgf·cm, 70 in·lbf)

b) Repeat the procedure on the opposite side.

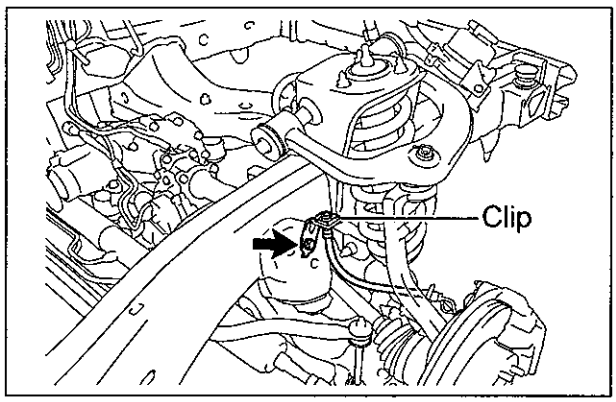

27. RECONNECT THE FRONT BRAKE HOSE

a) Install a ***NEW*** bracket with a ***NEW*** bolt and torque to spec.

Torque Spec: 28 N·m (285 kgf·cm, 20 ft·lbf)

b) Reinstall the front brake hose with the clip.
c) Repeat the procedure on the opposite side.

NEW Replacement Parts

Part Number	Part Name	Kit #	Qty
47314-0C011	Tube, Front Brake, No.4	7-11	1
47317-0C011	Tube, Front Brake, No.7	7-11	1
90080-11180	Bolt - with ABS	9-11	2
90904-12066	Way, No. 2 (for front brake tube)	1-3	1
90904-12067	Way, No. 3 (for front brake tube)	1-3	1
91621-B0816	Bolt - without ABS	1-2	2

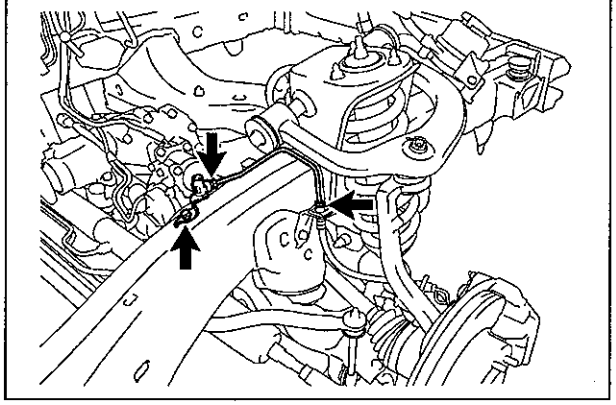

28. INSTALL THE *NEW* FRONT BRAKE TUBE & *NEW* WAY

a) Temporarily install the ***NEW*** front brake tube and ***NEW*** way.
b) Install the ***NEW*** bolt to the ***NEW*** front way and torque to spec.

Torque Spec: 28 N·m (285 kgf·cm, 20 ft·lbf)

c) Torque the ***NEW*** front brake tube to spec.

Torque Spec: 15 N·m (153 kgf·cm, 11 ft·lbf)

d) Repeat the procedure on the opposite side.

29. REINSTALL THE WHEELS

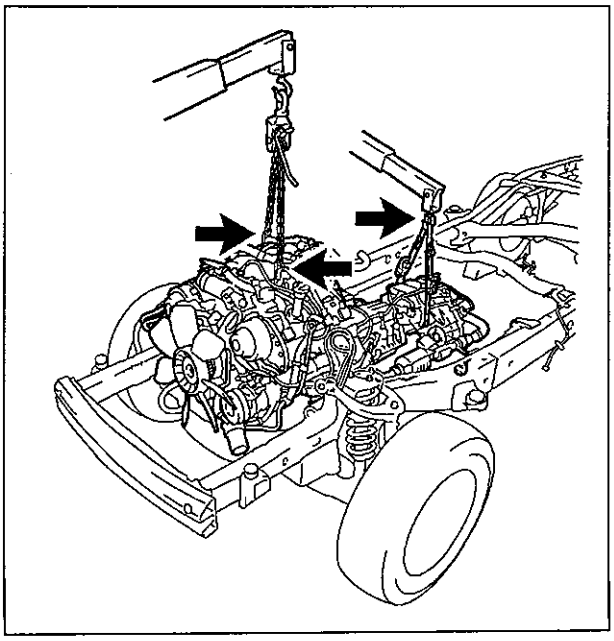

30. REINSTALL THE ENGINE AND TRANSMISSION ASSY

a) Reinstall engine and transmission assy.

NOTE:
- **When reinstalling the engine and transmission assy, ALWAYS use 2 engine hoists or mini cranes to lift it.**
- **DO NOT use 1 engine hoist or mini crane to lift the engine and transmission assy, as the unbalanced weight may lead to an accident or injury.**
- **ONLY use engine hoists or mini cranes that can properly support the weight of the engine and transmission assy.**
- **Carefully adjust the 2 engine hoists or mini cranes used so that the engine and transmission assy is properly balanced.**

NEW Replacement Parts

Part Number	Part Name	Kit #	Qty
90179-10071	Nut	1-3	4

Left Side

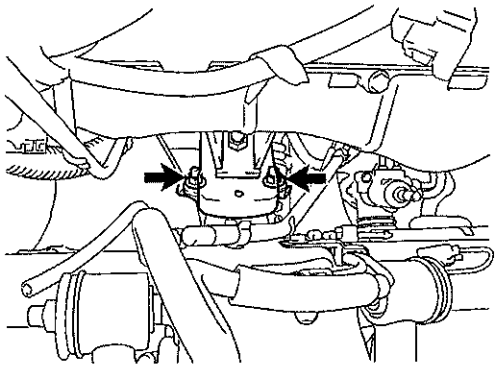

Right Side

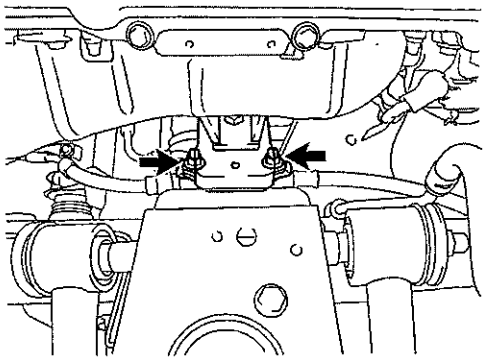

b) Attach the engine mounts with the 4 bolts and 4 ***NEW*** nuts, then torque to spec.

Torque Spec: 38 N·m (387 kgf·cm, 28 ft·lbf)

NEW Replacement Parts

Part Number	Part Name	Kit #	Qty
90080-11387	Bolt	4-6	4

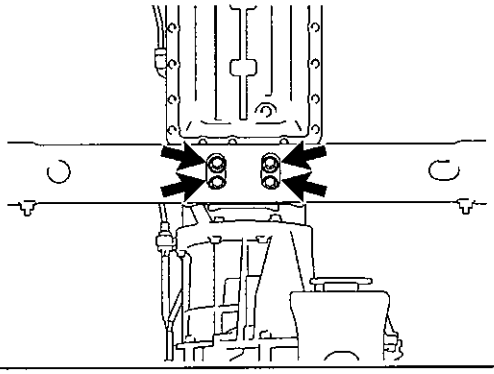

c) Attach the transmission mount with 4 ***NEW*** bolts and torque to spec.

Torque Spec: 18 N·m (183 kgf·cm, 13 ft·lbf)

d) Remove the bolt(s) and the engine hangers ***(5VZ-FE ONLY)***.
e) Reinstall the items/parts that were removed during the engine and transmission assy removal.

31. REINSTALL THE POWER STEERING PUMP ASSY

a) Reinstall the power steering vane pump with the 2 bolts and the nut ***(2UZ-FE Only)*** or the bolt and the nut ***(5VZ-FE Only)***, then toque to spec.

Torque Spec: 44 N·m (450 kgf·cm, 33 ft·lbf)

b) Reconnect the connector ***(5VZ-FE Only)***.
c) Reinstall the drive belt.

NEW Replacement Parts

Part Number	Part Name	Kit #	Qty
23232-41081	Gasket (For Fuel Pump Hose)	NA*	1
90430-12026	Gasket (For Pulsation Damper Hose)	NA*	1

* Individual part(s)

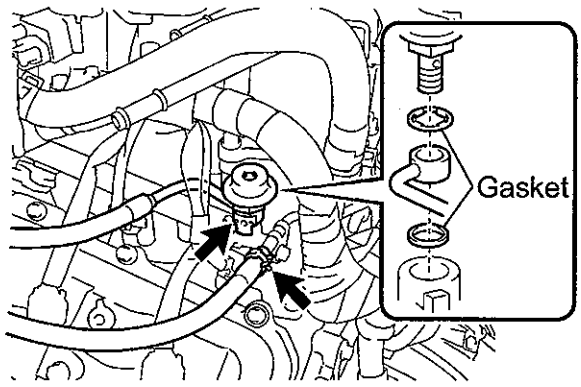

32. RECONNECT THE FUEL TUBES AND HOSES

For 2UZ-FE Vehicles:

a) Reconnect the fuel return hose with the clamp.
b) Reconnect the fuel main hose with the 2 ***NEW*** gaskets and the pulsation dumper, then torque to spec with **SST 09617-24011**.

Torque Spec: 39 N·m (397 kgf·cm, 29 ft·lbf)

NEW Replacement Parts

Part Number	Part Name	Kit #	Qty
90430-12026	Gasket (For Pulsation Damper Hose)	NA*	2

* Individual part(s)

Illustration A

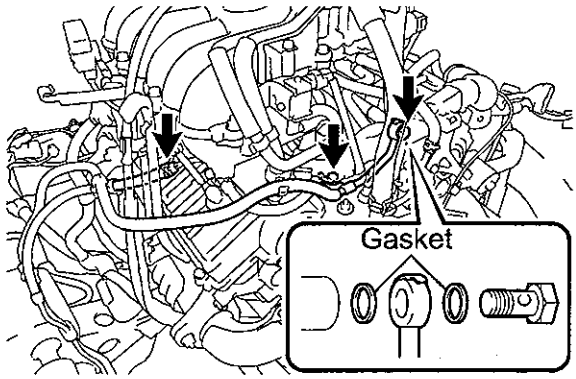

Illustration B

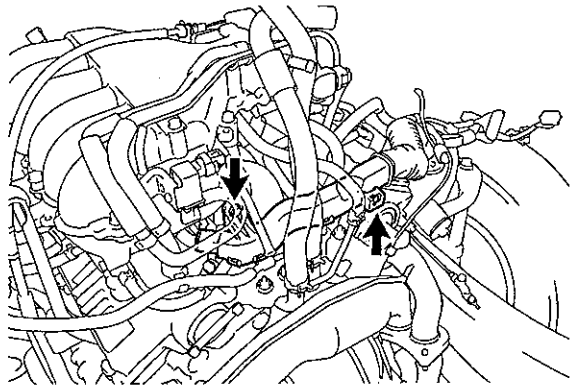

For 5VZ-FE Vehicles:

a) Reconnect the fuel return hose with the clamp (Illustration A).
b) Temporarily reconnect the main fuel pipe with the union bolt and 2 ***NEW*** gaskets (Illustration A).
c) Reinstall the bracket bolt and torque to spec (Illustration A).

Torque Spec: 8.0 N·m (81 kgf·cm, 70 in·lbf)

d) Torque the union bolt to spec (Illustration A).

Torque Spec: 34 N·m (346 kgf·cm, 25 ft·lbf)

e) Reinstall the wire harness clip and bolt (Illustration B).

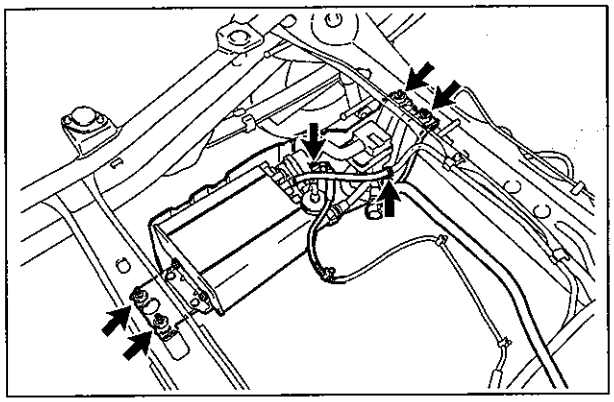

33. REINSTALL THE CHARCOAL CANISTER ASSY (Only For Vehicles Produced After August 2002)

a) Reinstall the charcoal canister assy with the 4 bolts and torque to spec.

Torque Spec: 15 N·m (153 kgf·cm, 11 ft·lbf)

b) Reconnect the fuel hose.

NEW Replacement Parts

Part Number	Part Name	Kit #	Qty
77601-34030	Fuel Tank Strap, No. 1**	NA*	1
77601-34040		NA*	1
77603-34060	Fuel Tank Strap, No. 2**	NA*	1
77603-34070		NA*	1

* Individual part(s)
** Only 1 part is used. The part number varies depending on the Kit #

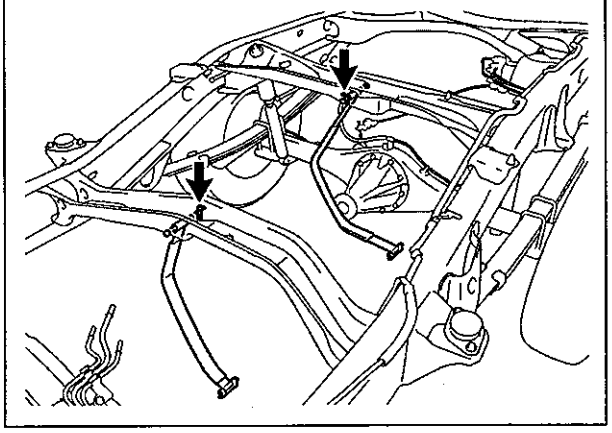

34. INSTALL THE *NEW* FUEL TANK STRAPS

a) Install the ***NEW*** fuel tank straps with the 2 pins and 2 clips.

NEW Replacement Parts

Part Number	Part Name	Kit #	Qty
90080-11376	Bolt - 2000-2002 MY	4-5	2
90119-A0077	Bolt - 2003 MY	6	2

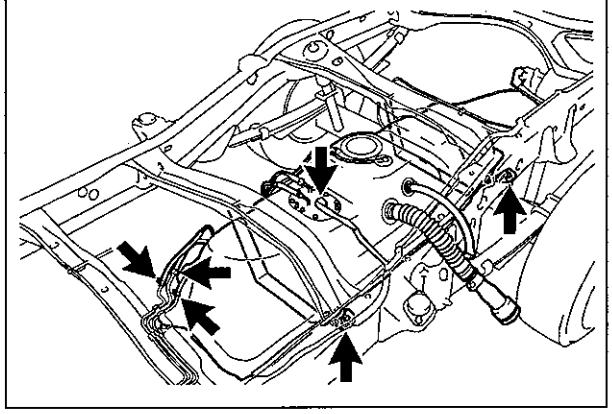

35. REINSTALL THE FUEL TANK

a) Reinstall the fuel tank with the 2 ***NEW*** bolts and torque to spec.

Torque Spec: 62 N·m (632 kgf·cm, 46 ft·lbf)

b) Reinstall the fuel tubes.

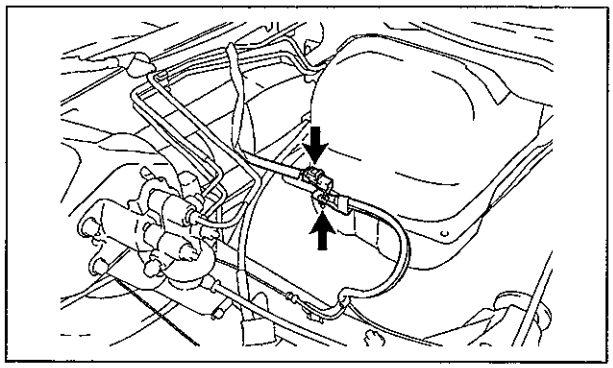

36. RECONNECT THE REAR SPEED SENSOR CONNECTOR (ABS EQUIPPED VEHICLES ONLY)

a) Reconnect the rear speed sensor connector with the nut, and torque to spec.

Torque Spec: 13 N·m (132 kgf·cm, 10 ft·lbf)

NEW Replacement Parts

2UZ-FE

Part Number	Part Name	Kit #	Qty
18495-38020	Retainer, Exhaust Pipe	NA*	2
90080-43034	Gasket, Exhaust Pipe**	NA*	2
90917-06083	Gasket, Exhaust Pipe**	NA*	2

* Individual part(s)
** Only 1 part is used. The part number varies depending on the Kit #

5VZ-FE

Part Number	Part Name	Kit #	Qty
18495-76010	Retainer, Exhaust Pipe	NA*	1
90080-43033	Gasket, Exhaust Pipe**	NA*	1
90917-06057	Gasket, Exhaust Pipe**	NA*	1

* Individual part(s)
** Only 1 part is used. The part number varies depending on the Kit #

5VZ-FE

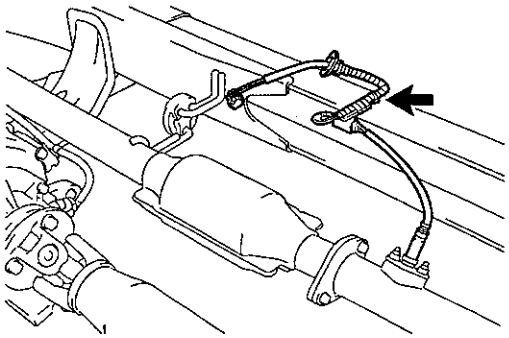

5VZ-FE

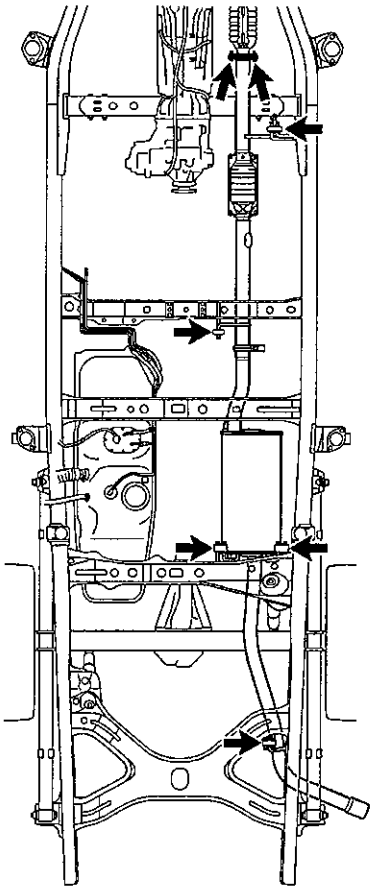

2UZ-FE

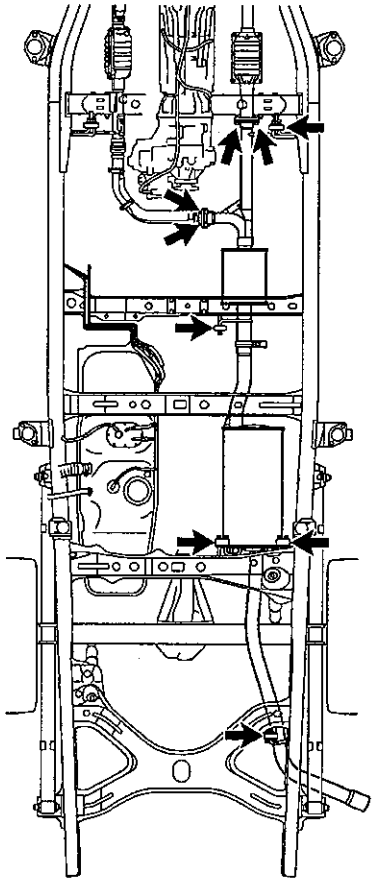

37. REINSTALL THE EXHAUST SYSTEM

a) Install ***NEW*** exhaust pipe gasket(s).
b) Reinstall the exhaust with exhaust pipe supports.
c) Reinstall flange retainer with the 2 bolts and torque to spec (***5VZ-FE Only***).

Torque Spec: 48 N·m (489 kgf·cm, 35 ft·lbf)

d) Remove 2 flange retainers with 4 bolts and torque to spec (***2UZ-FE Only***).

Torque Spec: 48 N·m (489 kgf·cm, 35 ft·lbf)

e) Reconnect the oxygen sensor wire harness clamp (***5VZ-FE Only***).

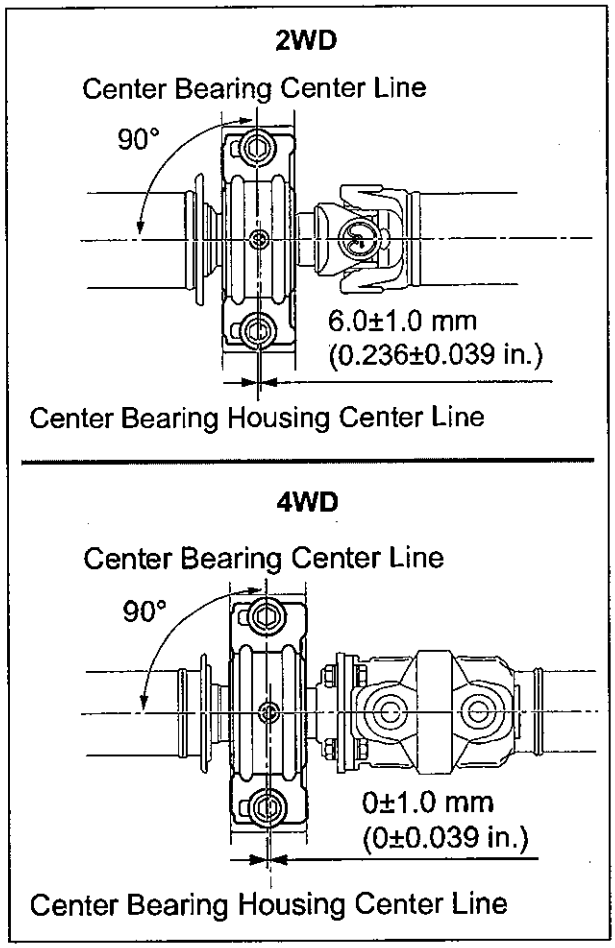

38. REINSTALL THE REAR PROPELLER SHAFT

a) Remove the **SST 09325-40010** (***2WD Only***).
b) Referencing the matchmarks, reinstall the propeller shaft to the the transmission / transfer case and torque to spec.

Torque Spec: 74 N·m (750 kgf·cm, 54 ft·lbf)

c) Reinstall the center support bearing to the frame as shown in the illustration with 2 bolts and torque to spec ***(3-Joint Type Only)***.

Torque Spec: 40 N·m (408 kgf·cm, 30 ft·lbf)

d) Referencing the matchmarks, reinstall the propeller shaft to the rear differential with 4 bolts, 4 washers and 4 nuts, then torque to spec.

Torque Spec: 74 N·m (750 kgf·cm, 54 ft·lbf)

39. REINSTALL THE FRONT PROPELLER SHAFT

a) Referencing the matchmarks, install the front propeller shaft to the transfer case and the front differential with 8 bolts, 8 washers and 8 nuts, then torque to spec.

Torque Spec: 74 N·m (750 kgf·cm, 54 ft·lbf)

NEW Replacement Parts

Part Number	Part Name	Kit #	Qty
90080-11180	Bolt	4-6	4

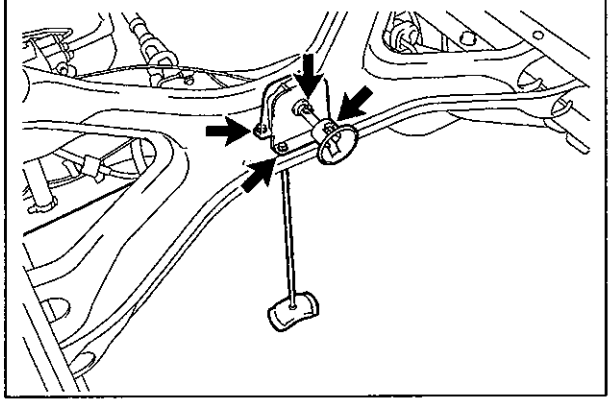

40. REINSTALL THE SPARE TIRE CARRIER

a) Reinstall the spare wheel carrier with the 4 ***NEW*** bolts and torque to spec.

Torque Spec: 20 N·m (203 kgf·cm, 14 ft·lbf)

b) Reinstall the spare tire.

41. REMOVE THE FRAME FROM THE LIFT

a) Remove the ratcheting tie down strap from the frame.
b) Lower the frame to the ground.

G. REINSTALL THE CAB BODY ASSY

NEW Replacement Parts

Without ABS

Part Number	Part Name	Kit #	Qty
47312-0C011	Tube, Front Brake, No. 2	7-8	1
47316-0C011	Tube, Front Brake, No. 6	7-8	1
47319-0C021	Tube, Front Brake, No. 9	7-8	1
47321-0C011	Tube, Rear Brake, No. 1	7-8	1

With ABS

Part Number	Part Name	Kit #	Qty
47313-0C011	Tube, Front Brake, No. 3	9	1
47313-0C012	Tube, Front Brake, No. 3	10-11	1
47316-0C021	Tube, Front Brake, No. 6	9	1
47316-0C022	Tube, Front Brake, No. 6	10-11	1
47319-0C021	Tube, Front Brake, No. 9	9-11	1
47322-0C011	Tube, Rear Brake, No. 2	NA*	1
47322-0C012	Tube, Rear Brake, No. 2	NA*	1

* Individual part(s)

1. INSTALL THE *NEW* ENGINE COMPARTMENT BRAKE TUBES

Without ABS

a) Install the ***NEW*** No. 2, No. 6 & No. 9 front brake tubes.
b) Install the ***NEW*** No. 1 rear brake tubes.
c) Torque all brake tubes to spec.

Torque Spec: 15 N·m (153 kgf·cm, 11 ft·lbf)

With ABS

a) Install the ***NEW*** No. 3, No. 6 & No. 9 front brake tubes.
b) Install the ***NEW*** No. 2 rear brake tubes.
c) Torque all brake tubes to spec.

Torque Spec: 15 N·m (153 kgf·cm, 11 ft·lbf)

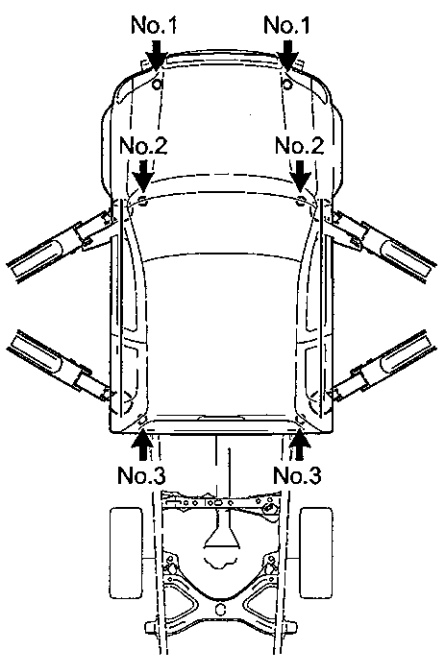

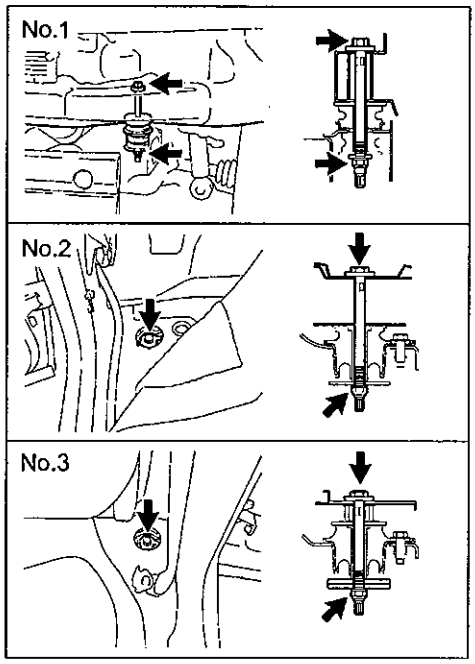

2. REINSTALL THE CAB BODY ASSEMBLY

a) Raise the cab assy high enough so that the top of the engine clears the lowest point of the cab.
b) Push the frame under the cab assy.
c) Lower the cab assy slowly, making sure it does not interfere with anything.
d) Adjust the vehicle's frame as needed to align the cab mounts with the cab assy bolts.
e) Once the cab assy is set on the mounts, secure it to the frame with 6 bolts, 6 nuts, 6 washers and torque to spec.

Torque Spec: 47 N·m (479 kgf·cm, 34 ft·lbf)

NOTE:

- **DO NOT work directly underneath the vehicle when pushing the frame under the cab assy.**
- **Slowly lower the cab body assembly while making sure that the wire harness, steering shaft and hoses do not interfere.**
- **With 2 to 3 people checking for interference, slowly lower the cab body assembly to the frame.**

EW Replacement Parts

Part Number	Part Name	Kit#	Qty
90080-11555	Bolt	4-6	2

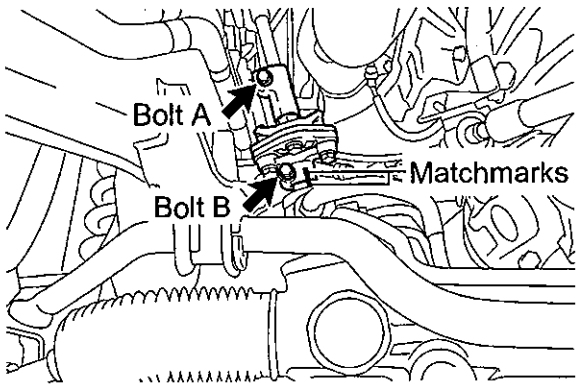

3. RECONNECT THE NO. 2 INTERMEDIATE SHAFT

NOTE:
Use precaution when performing this step, as you will need to work underneath the vehicle.

a) Make sure the front wheels are in a straight-ahead position and the steering wheel is centered.
b) Referencing the matchmarks, connect the No. 2 intermediate shaft to the control valve shaft with the ***NEW*** bolt "B".
c) Remove bolt "**A**" and install the ***NEW*** bolt "**A**".
d) Torque all bolts to spec.

Torque Spec: 35 N·m (356 kgf·cm, 26 ft·lbf)

e) Disconnect the seat belt that is holding the steering wheel.

LH SIDE

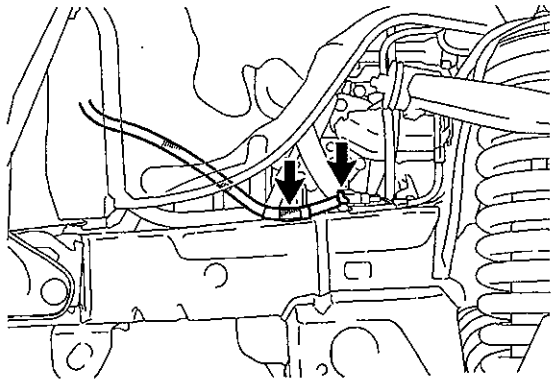

RH SIDE

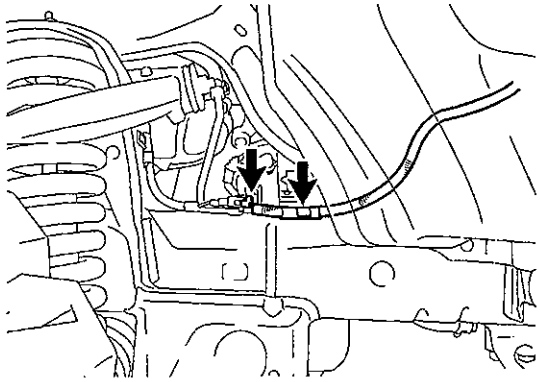

4. RECONNECT THE FRONT SPEED SENSOR CONNECTORS (ABS EQUIPPED VEHICLES ONLY)

a) Reconnect the harness clamp and front speed sensor connector.
b) Repeat the procedure on the opposite side.

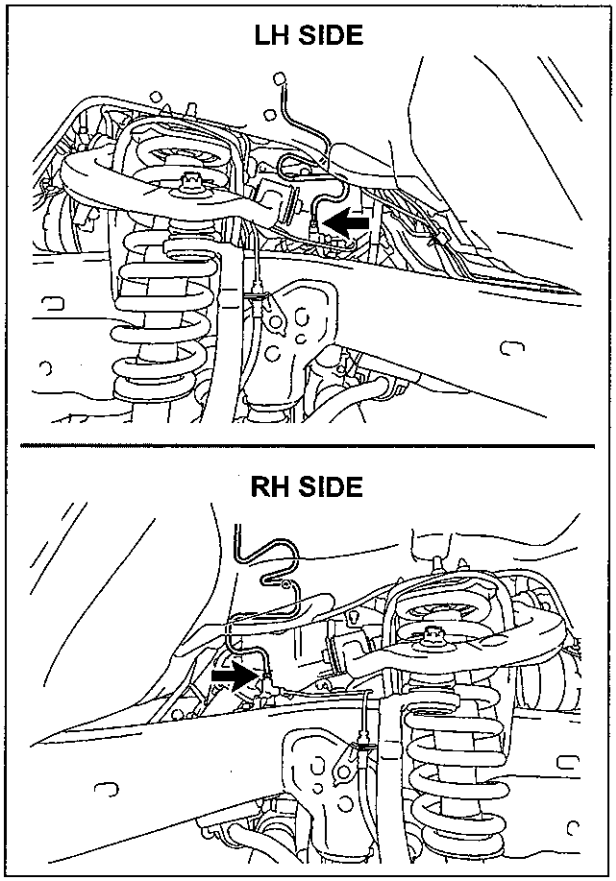

5. **RECONNECT THE FRONT BRAKE TUBES**

   a) Reconnect the front brake tube and torque to spec.

   Torque Spec: 15 N·m (153 kgf·cm, 11 ft·lbf)

   b) Repeat the procedure on the opposite side.

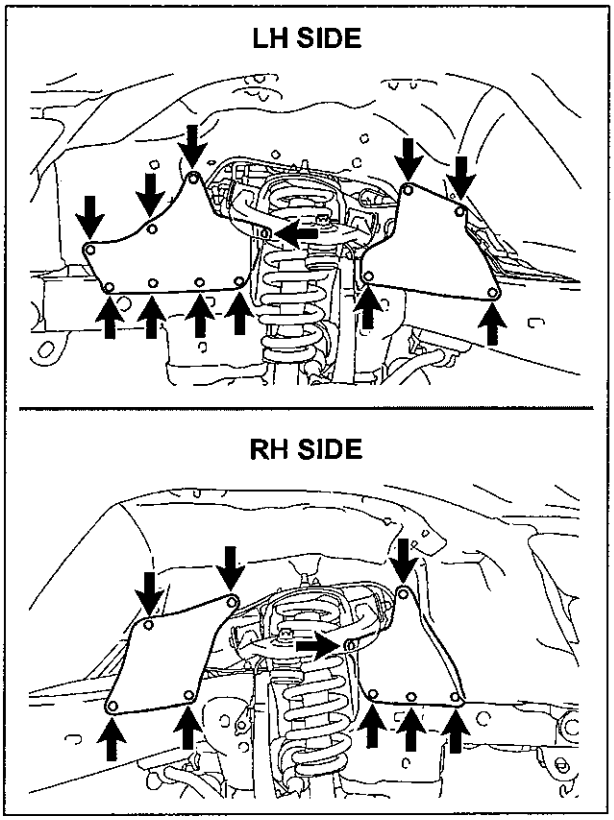

6. **REINSTALL THE FRONT FENDER APRON SEAL**

   a) Reinstall the 4 front fender apron seals with the 21 clips.

7. **REINSTALL THE FOLLOWING PARTS**

- Transfer Case Shift Lever (***5VZ-FE 4WD Only***)
- Manual Transmission Shift Lever (***Manual Transmission Vehicles Only***)

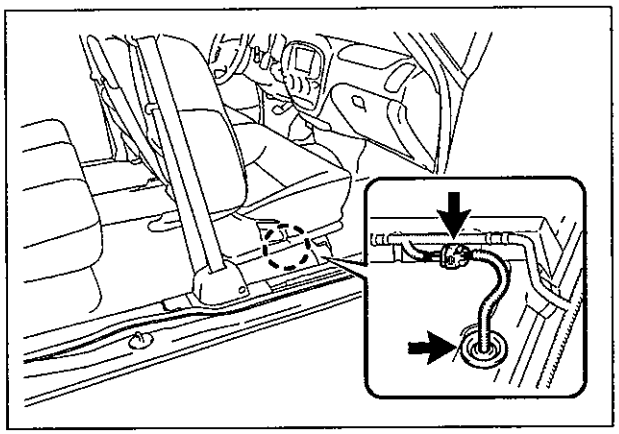

8. RECONNECT THE OXYGEN SENSOR WIRE HARNESS CONNECTOR (5VZ-FE ONLY)

a) Insert the oxygen sensor wire harness into the cab assy.
b) Reinstall the oxygen sensor wire harness grommet to the cab assy.
c) Reconnect the oxygen sensor wire harness connector.
d) Reinstall the right front cowl side trim panel.
e) Reinstall the right access cab door scuff plate (***Access Cab Only***).
f) Reinstall the right front door scuff plate.

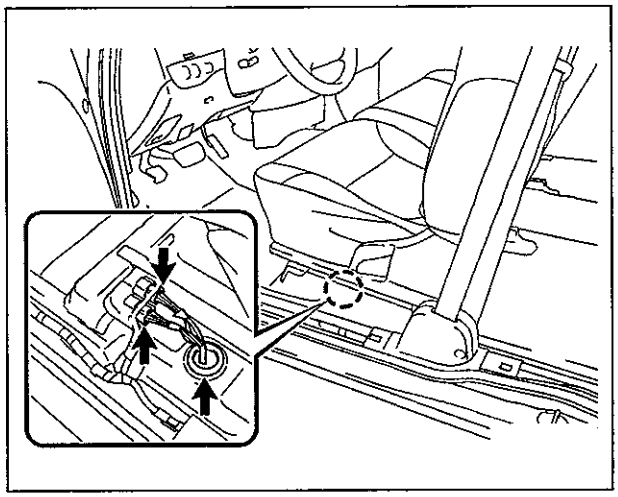

9. RECONNECT THE FRAME WIRE HARNESS CONNECTOR

a) Insert the frame wire harness into the cab assy.
b) Reinstall the frame wire harness grommet to the cab assy.
c) Reconnect the frame wire harness connector(s).
d) Reinstall the left front cowl side trim panel.
e) Reinstall the left access cab door scuff plate (***Access Cab Only***).
f) Reinstall the left front door scuff plate.

NOTE:
The number of connectors will differ depending on the vehicle spec.

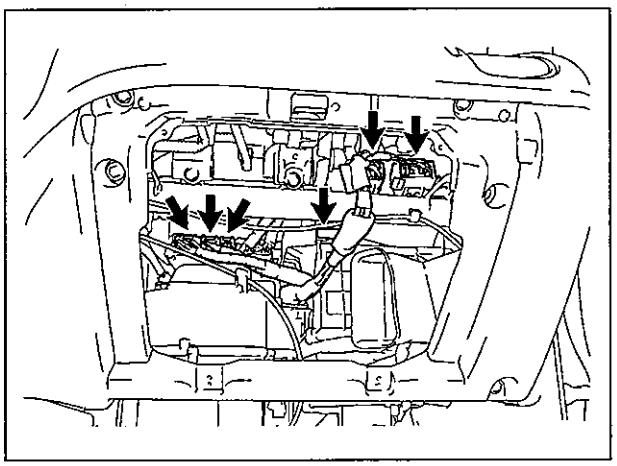

10. RECONNECT THE ENGINE WIRE HARNESS

a) Reconnect the connectors and clamp.
b) Reinstall the No. 4 heat register duct.
c) Reinstall the lower No. 2 finish panel.
d) Reinstall the glove box.

NOTE:
The number of connectors will differ depending on the vehicle specification.

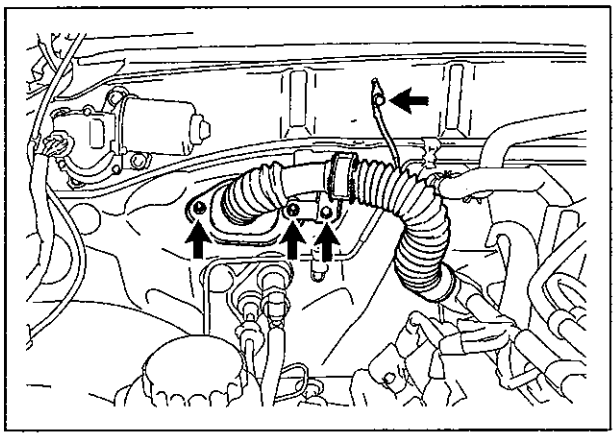

e) Reinstall the 2 nuts that hold the engine wire harness container to the cowl panel.
f) Reinstall the bolt.
g) Reinstall the ground wire and bolt and torque to spec.

Torque Spec: 8.0 N·m (81 kgf·cm, 70 in·lbf)

NEW Replacement Parts

A/C

Part Number	Part Name	Kit #	Qty
90099-14120	O-Ring	1-3	1
90099-14121	O-Ring	1-3	1

11. RECONNECT THE FOLLOWING PARTS

- Air Conditioning Discharge and Suction Hoses.
  - Install a ***NEW*** o-ring to the A/C discharge and suction hoses.
  - Reconnect the A/C discharge and suction hoses and torque to spec.
  - **Torque Spec: 10 N·m (100 kgf·cm, 7 ft·lbf)**
- Water/Heater Hoses (Engine Side)

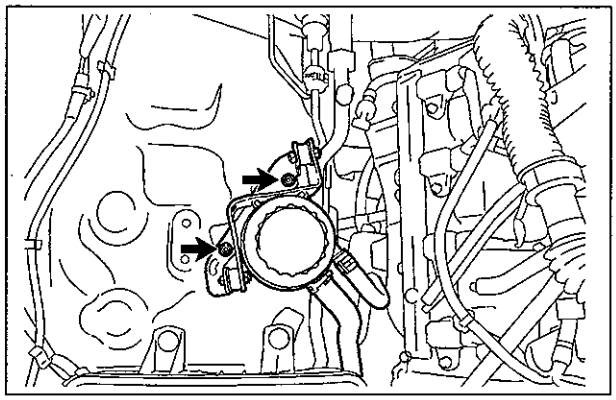

12. RECONNECT THE VANE PUMP OIL RESERVOR (2UZ-FE ONLY)

a) Reinstall the vane pump oil reservoir with the 2 nuts and torque spec.

Torque Spec: 8.0 N·m (81 kgf·cm, 70 in·lbf)

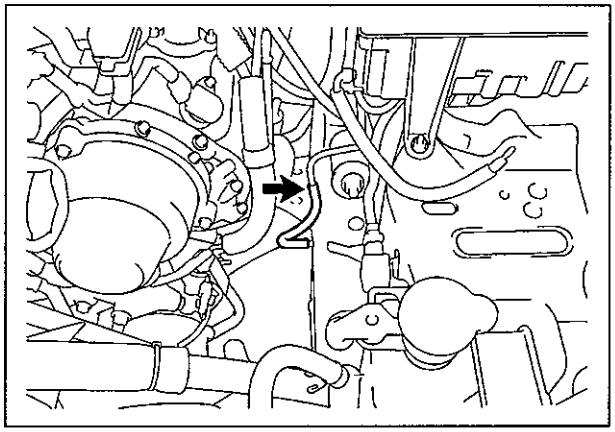

13. RECONNECT THE NO.1 FUEL HOSE (ONLY FOR VEHICLES PRODUCED ON OR BEFORE AUGUST 2002)

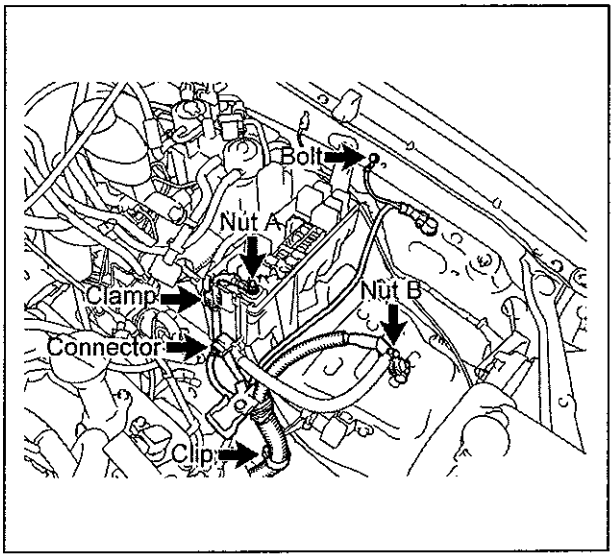

14. DISCONNECT THE NO.2 ENGINE WIRE HARNES

a) Reinstall the clip and reconnect the No.2 engine wire harness.
b) Reconnect the (+) positive battery cable with the 2 nuts and torque to spec.

Torque Spec: Nut A - 10 N·m (102 kgf·cm, 7 ft·lbf)
Nut B - 13 N·m (132 kgf·cm, 10 ft·lbf)

c) Reconnect the ground wire with the bolt and torque to spec.

Torque Specification: 8.0 N·m (81 kgf·cm, 70 in·lbf)

d) Reconnect the clamp and connector.
e) Reinstall the relay block cover.

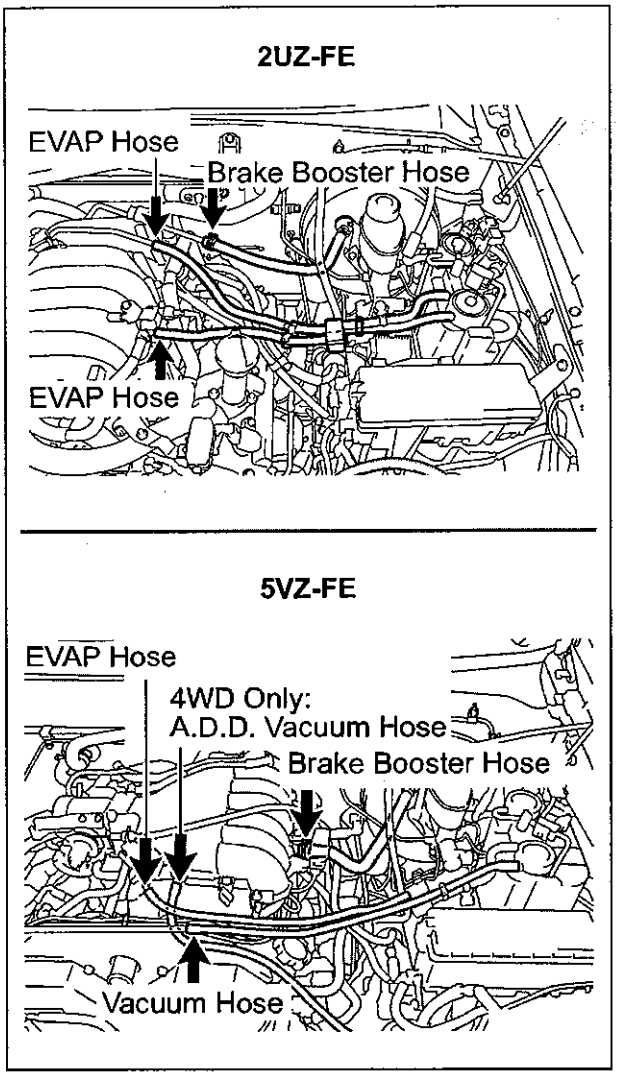

15. RECONNECT THE HOSES

a) Reconnect the A.D.D. vacuum hose (***5VZ-FE 4WD Only***).
b) Reconnect the vacuum hose (***5VZ-FE Only***).
c) Reconnect the EVAP hose(s).
d) Reconnect the brake booster hose.

NOTE:
The number of hoses will differ depending on the vehicle specification.

16. RECONNECT THE FOLLOWING PARTS

- Cruise Control Cable ***(If Equipped)***
- Accelerator Cable, Engine Side ***(Only For Vehicles Produced On Or Before August 2002)***

17. REINSTALL THE FOLLOWING PARTS

- Air Cleaner Case Assy & Hose
- Throttle Body Cover ***(2UZ-FE Only)***

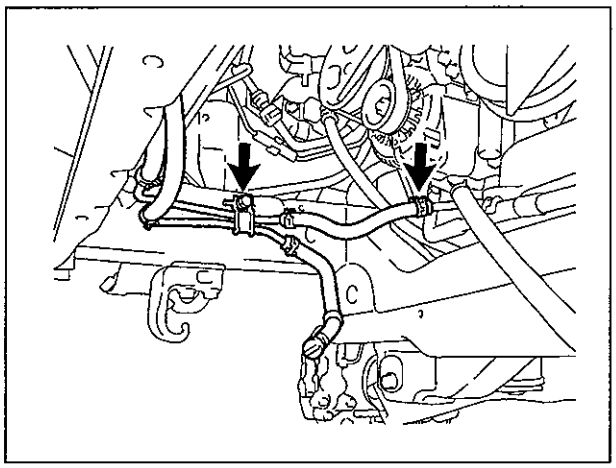

18. REINSTALL THE OIL COOLER PIPE (2UZ-FE ONLY)

a) Reinstall the oil cooler pipe with the bolt and torque to spec.

Torque Spec: 12 N·m (122 kgf·cm, 9 ft·lbf)

b) Reconnect the hose.

NEW Replacement Parts

Radiator

Part Number	Part Name	Kit #	Qty
16492-21050	O-Ring (2UZ-FE Only)	NA*	1
96711-19007	O-Ring (5VZ-FE Only)	NA*	1

* Individual part(s)

Front Bumper

Part Number	Part Name	Kit #	Qty
52145-0C010	Bracket, Front Bumper Side Mounting, RH	4-6	1
52146-0C010	Bracket, Front Bumper Side Mounting, LH	4-6	1
90119-A0049	Bolt	4-6	4
90179-06314	Nut	1-2	2
90179-08063	Nut	1-2	2

19. REINSTALL THE FOLLOWING PARTS

- Radiator
  - Install a ***NEW*** o-ring to the A/C discharge and suction hoses.
  - Reconnect the A/C discharge and suction hoses and torque to spec.
  - **Torque Spec: 10 N·m (100 kgf·cm, 7 ft·lbf)**
- Front Bumper Assy - Steel Bumper Only
  - Reinstall with the ***NEW*** side mounting brackets, bolts and nuts, then torque to spec.
  - **Torque Spec:**
    Bolt - 58 N·m (591 kgf·cm, 42 ft·lbf)
    Nut - 12 N·m (122 kgf·cm, 9 ft·lbf)
- Front Bumper Assy – Resin Bumper Only
  - Reinstall with the bolts and torque to spec.
  - **Torque Spec: 7.0 N·m (71 kgf·cm, 62 in·lbf)**

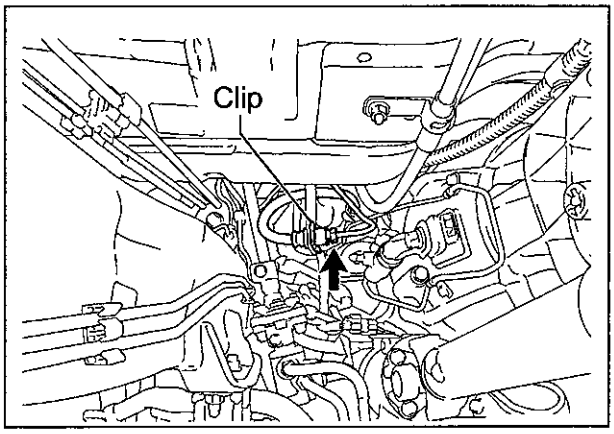

20. RECONNECT THE CLUTCH MASTER CYLINDER TUBE (MANUAL TRANSMISSION VEHICLES ONLY)

a) Reconnect the clutch hose to the bracket with the clip.
b) Reconnect the clutch master cylinder tube and torque to spec.

Torque Spec: 15 N·m (153 kgf·cm, 11 ft·lbf)

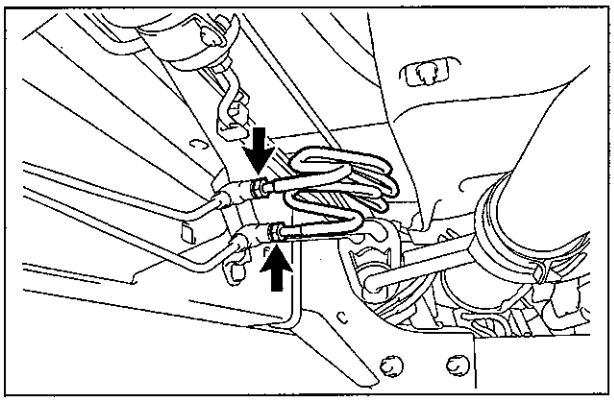

21. RECONNECT THE REAR BRAKE TUBES

a) Reconnect the 2 rear brake tubes and torque to spec.

Torque Spec: 15 N·m (153 kgf·cm, 11 ft·lbf)

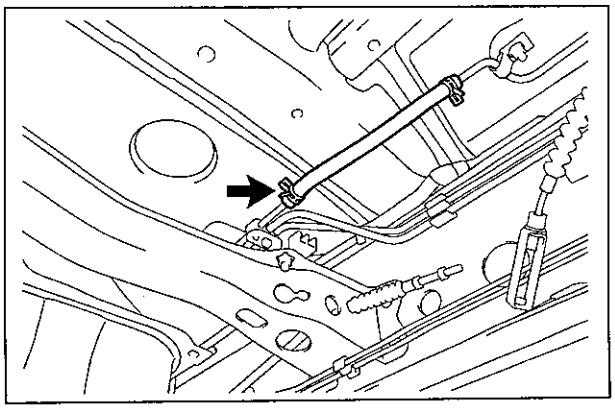

22. RECONNECT THE NO.1 FUEL HOSE

a) Reconnect the No.1 fuel hose with the clip

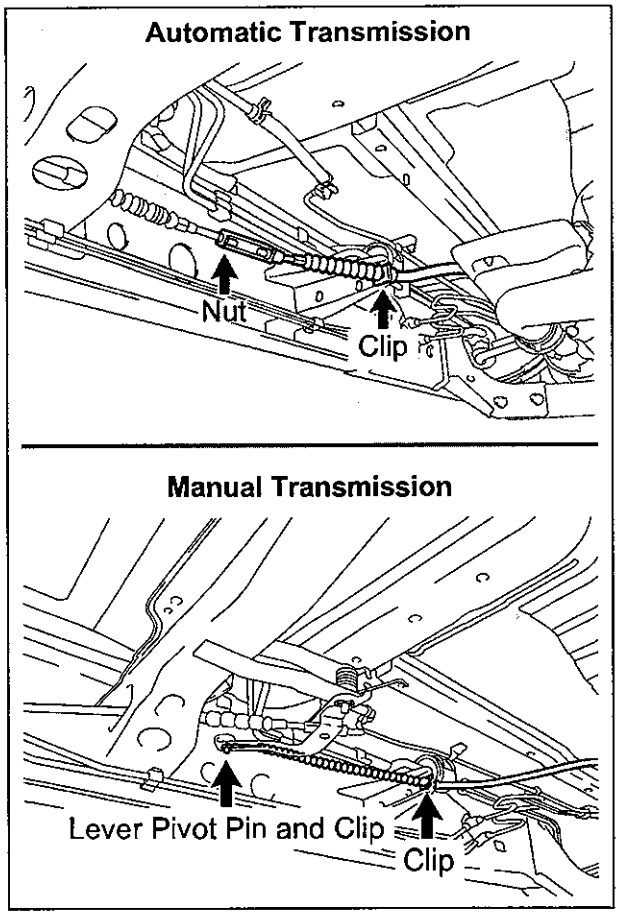

23. RECONNECT THE NO. 1 PARKING BRAKE CABLE

For Automatic Transmission Vehicles

a) Reinstall the No.1 parking brake cable assy and tighten the nut.
b) Reinstall the clip.

For Manual Transmission Vehicles

a) Reinstall the No.1 parking brake cable assy with the clip.
b) Reinstall the lever pivot pin and clip.

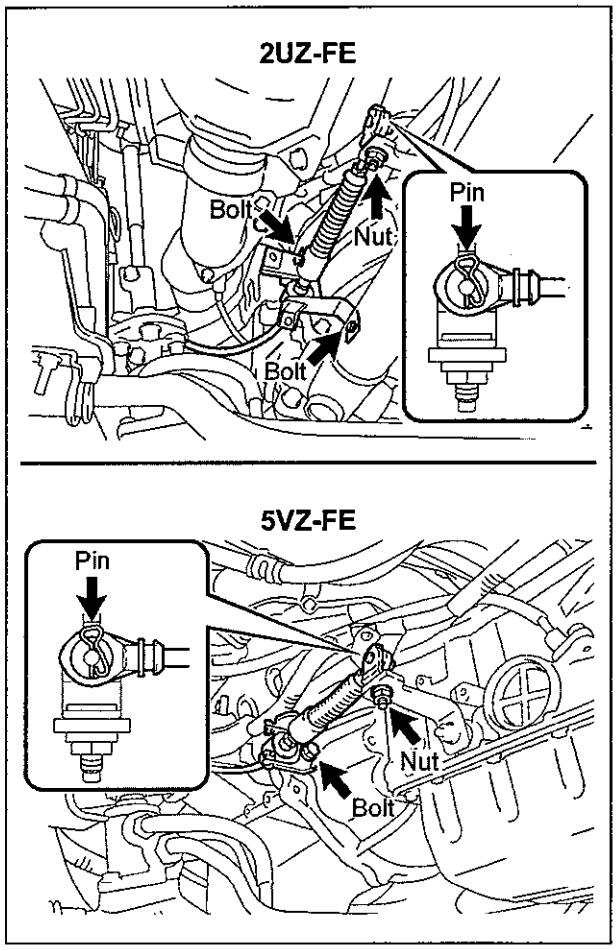

24. RECONNECT THE SHIFT CABLE

a) Reconnect the shift cable with the bolt(s) and torque to spec.

Torque Spec: 2UZ-FE - 18 N·m (183 kgf·cm, 13 ft·lbf)
5VZ-FE - 71 N·m (724 kgf·cm, 52 ft·lbf)

b) Reinstall the washer and pin.

H. REINSTALL THE BED ASSY

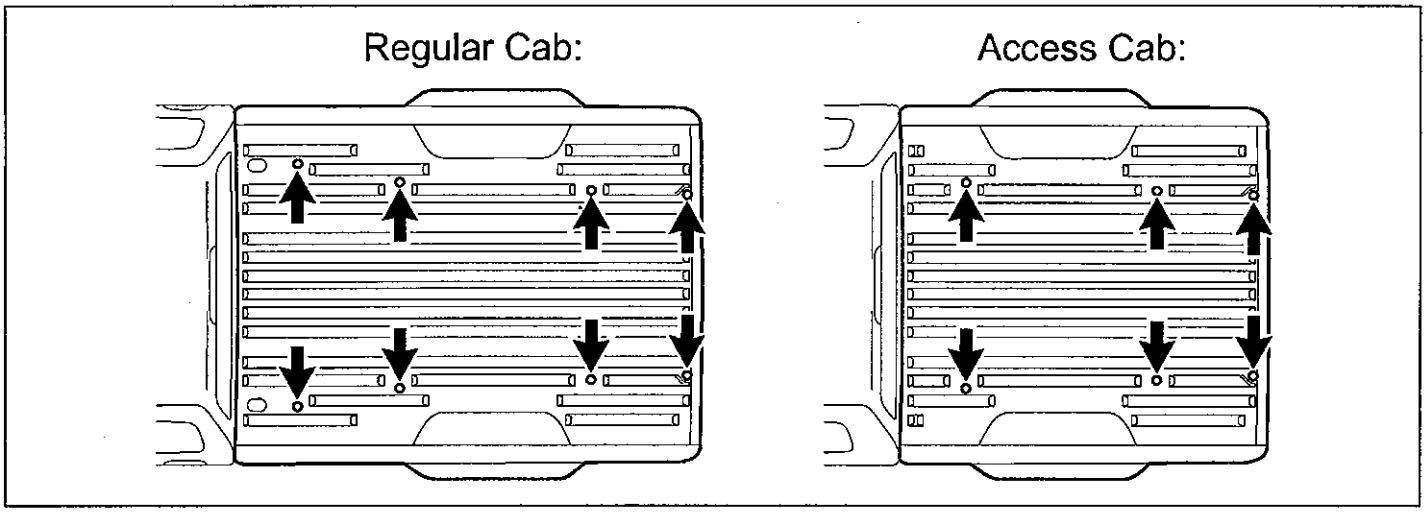

1. REINSTALL THE BED ASSY

a) Using a "TORX" socket wrench (T55), reinstall the bed assy "TORX" bolts and torque to spec.

Torque Spec: 86 N·m (877 kgf·cm, 63 ft·lbf)

NOTE:
- **Ask 4 to 6 people to help with the reinstallation of the bed assy to the frame.**
- **Evenly support the bed assy when reinstalling it.**
- **Be careful not to damage or hit the fuel inlet pipe when reinstalling the bed assy.**

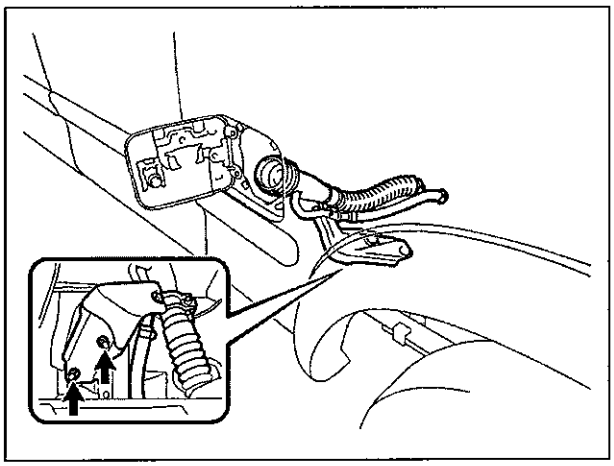

2. REINSTALL THE FUEL INLET PIPE

a) Reinstall the fuel inlet pipe with the 2 nuts and torque to spec.

Torque Spec: 27 N·m (275 kgf·cm, 20 ft·lbf)

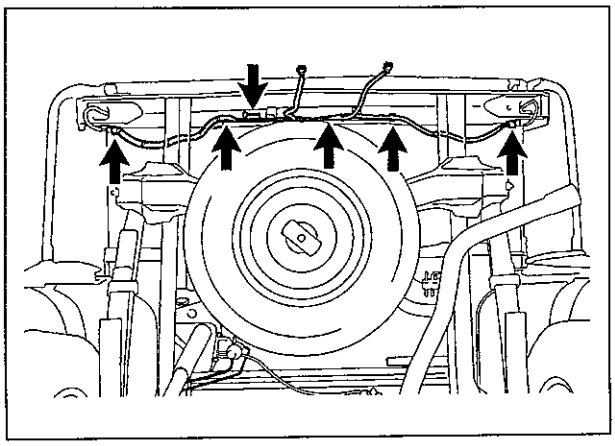

3. REINSTALL THE FRAME WIRE HARNESS

a) Reconnect the 4 wire harness clamps to the bed assy.
b) Reconnect the connectors.

NOTE:
- **The number of connectors will differ depending on the vehicle spec.**
- **Use new clamps if the original ones are damaged.**

NEW Replacement Parts

Rear Bumper

Part Number	Part Name	Kit #	Qty
90119-12311	Bolt	1-3	4
90119-A0073	Bolt	4-6	6

4. REINSTALL THE FOLLOWING PARTS

a) Fuel Tank Filler Pipe Shield
b) Side Step Assy ***(If Equipped)***
c) Rear Mudguards ***(If Equipped)***
d) Trailer Hitch ***(If Equipped)***
e) Rear Bumper Assy
   - Reinstall with 10 ***NEW*** bolts and torque to spec.
   - **For Vehicles Produced On Or Before August 2002 Torque Spec: 80 N·m (815 kgf·cm, 59 ft·lbf)**
   - **For Vehicles Produced After August 2002 Torque Spec: 100 N·m (1019 kgf·cm, 73 ft·lbf)**
f) Center Rear Bumper Pad
g) License Plate Lights

I. FINAL ASSEMBLY

5. REINSTALL THE BATTERY

NEW Replacement Parts

Front Differential

Part Number	Part Name	Kit #	Qty
12157-10010	Gasket, Front Differential Filler Plug	NA*	1
90430-24003	Gasket, Front Differential Drain Plug	NA*	1

* Individual part(s)

6. REFILL THE FOLLOWING FLUIDS

- Brake Fluid
  - Remove the brake tubes from the master cylinder.
  - Refill with Toyota Dot 3 Brake Fluid.
  - Bleed the master cylinder.
  - Reinstall the brake tubes to the master cylinder and torque to spec.
  - **Torque Spec: 15 N·m (153 kgf·cm, 11 ft·lbf)**
  - Refill with Toyota Dot 3 Brake Fluid.
  - Bleed the brake system at each wheel and torque the bleeder screws to spec.
  - **Torque Spec: 11 N·m (112 kgf·cm, 8 ft·lbf)**
- Clutch Fluid (***Manual Transmission Vehicles Only***)
  - Refill with Toyota Dot 3 Brake Fluid.
  - Bleed the clutch system and torque the bleeder screws to spec.
  - **Torque Spec: 11 N·m (112 kgf·cm, 8 ft·lbf)**
- Coolant
  - Refill with Toyota Long Life Coolant.
  - Bleed the cooling system.
- Front Differential
  - Install a ***NEW*** drain plug washer and torque to spec.
  - **Torque Spec: 65 N·m (662 kgf·cm, 48 ft·lbf)**
  - Refill with Hypoid Gear Oil API GL-5 75W-90.
  - Install a ***NEW*** filler plug washer and torque to spec.
  - **Torque Spec: 39 N·m (397 kgf·cm, 29 ft·lbf)**

7. START THE VEHICLE AND INSPECT THE FOLLOWING FOR LEAKS

- Fuel System
  - Start the engine and let it run for 5 seconds, then stop the engine and inspect for leaks.
  - If there are no leaks, restart the engine and re-inspect.
- Cooling System
- Brake System
- Clutch System (***Manual Transmission Vehicles Only***)
- Front Differential System

8. **RECHARGE THE A/C SYSTEM AND CHECK FOR PROPER OPERATION AND REFRIGERANT LEAKS**

9. **CHECK THE OPERATION OF THE FOLLOWING SYSTEMS AND ADJUST AS NEEDED**

> **STOP** Make sure to follow the procedure outlined in the appropriate repair manual for the vehicle you are working on when checking, and if needed, adjusting the operation of the systems listed below. This is an important step, and must be performed thouroughly to ensure proper operation of these systems.

- Parking Brake Travel
- Shift Control Lever ***(Automatic Transmission Vehicles Only)***
- Clutch Pedal ***(Manual Transmission Vehicles Only)***
- LSPV ***(LSPV Equipped Vehicles Only)***

10. **CHECK ALL FLUID LEVELS AND ADJUST AS NEEDED**

NEW Replacement Parts

Part Number	Part Name	Kit #	Qty
95381-04045	Cotter Pin	NA*	2

* Individual part(s)

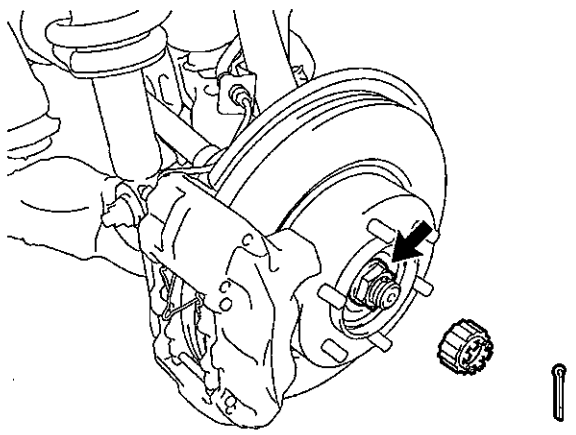

11. **TORQUE THE FRONT AXLE NUT (4WD ONLY)**

a) Remove the front wheels.
b) Torque the front axle nut to spec.

Torque Spec: 235 N·m (2396 kgf·cm, 173 ft·lb)

c) Reinstall the lock cap with the ***NEW*** cotter pin.
d) Reinstall the grease cap.
e) Repeat the procedure on the opposite side.
f) Reinstall the front wheels and torque to spec.

Torque Spec: 110 N·m (1121 kgf·cm, 81 ft·lbf)

NOTE:
If the holes for the cotter pin are not aligned, tighten the axle nut further, up to 60°.

12. **PERFORM A WHEEL ALIGNMENT**

13. **CHECK THE HEADLIGHT AIM AND ADJUST AS NEEDED**

NEW Replacement Parts

Part Number	Part Name	Kit #	Qty
90080-11373	Bolt	4-6	9
90159-60440	Screw	1-3	4

14. **REINSTALL THE ENGINE UNDER COVER**

a) Reinstall the engine under cover with ***NEW*** bolts and ***NEW*** screws and torque to spec.

Torque Spec: 29 N·m (295 kgf·cm, 21 ft·lbf)

15. **CHECK FOR DTC'S AND REPAIR AS NEEDED**

16. **PERFORM INITIALIZATION**

17. FINAL INSPECTION

a) Check the operation of the following systems:

- 4WD System ***(4WD Only)***
- Interior Lights
- Exterior Lights
- HVAC System
- Audio System
- Power Windows
- Power Door Locks
- All Gauges, Indicators and Warning Lights
- Cooling Fans
- Etc.

18. TEST DRIVE THE VEHICLE

J. APPENDIX

As required by Federal Regulations, please make sure all recalled parts (original parts) removed from the vehicle are disposed of in a manner in which they will not be reused. Adequate time has been provided in the repair time to cut up and dispose of the perforated frame.