RECEIVED
2006 JUN 26 P 12: 32
OFFICE OF DEFECTS
INVESTIGATION

mazda

TO: All Mazda Dealership General Managers, Service Managers, and Parts Managers

DATE: May 2006

SUBJECT: 2005 Tribute Headliner Compliance Recall 4006D

Mazda Motor Corporation has decided that certain 2005 Tribute vehicles, produced through March 31, 2005 without optional side air curtains or a moon roof fail to conform to requirements specified in Federal Motor Vehicle Safety Standard (FMVSS 201U, Occupant Protection in Interior Impact).

On certain 2005 Tribute vehicles, the energy absorbing material located above the forward corners of the interior headliner may not absorb sufficient energy to conform to regulatory requirements. In the event of a crash, an occupant could contact the location and may not be provided the interior impact protection intended.

Mazda has decided to conduct a Recall Campaign to inspect the energy absorbing material and, if necessary, modify them to increase their energy absorbing capability.

Owners of affected vehicles will be notified by first class mail beginning May 31, 2006.

This package contains important information about recall campaign 4006D:

Attachment I	Dealer Service and Parts information
Attachment II	Repair procedures
Attachment III	Owner notification letter

The National Traffic and Motor Vehicle Safety Act prohibits the delivery of any subject vehicle without performing the necessary repair for defects or failures. Failure to perform applicable recalls before delivery can result in extensive dealer fines and penalties from the Federal Government. Therefore, you must complete this recall for all affected vehicles in your inventory prior to delivery.

7755 Irvine Center Drive Irvine, CA 92618-2922 Telephone 949.727.1990
PO Box 19734 Irvine, CA 92623-9734 Facsimile 949.727.6101 Internet http://www.MazdaUSA.com

To help you effectively perform this recall, Mazda has developed the following resources:

1. Service and Parts recall instructions follow (Attachment I), were e-mailed to your Service Department, and are also available on eMDCS and the MS3 (Mazda Service Support System) websites.

2. Inspection and repair procedures follow (Attachment II), and are also available on the MS3 (Mazda Service Support System) and eMDCS websites.

3. We recommend using the enclosed report of registered owners in the dealer's area to encourage customers to come in for the recall (with recall reminder postcards). Dealers may use such owner information for the sole purpose of conducting and performing this recall, and for no other purpose. **Using it for marketing activities is strictly prohibited and could subject your dealership to serious fines.** The information in this report is protected by state privacy and other applicable laws regarding disclosure of personal and/or confidential, restricted or blocked information. It is the dealer's responsibility to protect the confidentiality of owner records and prevent the release of information to other parties.

   In California, privacy laws prevent the release of names and addresses on this report.

4. For technical assistance, call the Technical Assistance Hotline at (888) 832-8477.

5. For warranty questions, contact the Corporate Dealer Assistance Group at (877) 727-6626 Option 2.

Please make certain the appropriate personnel in your dealership are aware of these resources and are familiar with the details of this recall before responding to customer inquiries.

We apologize for any inconvenience this recall may cause you and your customers. Please keep in mind that owners of 2001 and newer models are eligible to receive a rental car at no charge. Your understanding and support in carrying out this campaign is greatly appreciated.

Sincerely,

Michael J. Giblin

Michael J. Giblin
Director, Technical Services
Mazda North American Operations

CONDITION OF CONCERN

On certain 2005 Tribute vehicles, the energy absorbing material located above the forward corners of the interior headliner may not absorb sufficient energy to conform to regulatory requirements.

SUBJECT VEHICLES

Model	VIN Range	Build Date Range
2005 Tribute	4F2 YZ****5K M00003-M62453	Job #1 through March 31, 2005

Note: The asterisk symbol "*" can be any letter or number.

OWNER NOTIFICATION

Mazda will notify U.S. owners by first class mail beginning May 31, 2006.

PARTS INFORMATION

Description	Part Number	Quantity	Note
Campaign Label	9999-95-065A-05	1=50 labels	Mstore (no charge)

PARTS ORDERING

Campaign labels are available in quantities of 50 per package by ordering through MStore.

SPECIAL SERVICE TOOL

Drill Guide (Jig)	AKS-42-411	1
5/8 Inch Auger Drill Bit	AKS-42-410	1

An initial shipment of a Drill Guide (Jig) and a 5/8" Auger Drill Bit will be shipped to dealers directly from the vendor beginning 5/26/06. Dealers should receive the special service tools by 5/30/06. Additional Drill Guides (Jigs) and 5/8" Auger Drill Bits can be ordered through M-Store for an additional cost. They cannot be ordered on the eMDCS Parts Ordering System. These parts are not inventoried at the PDCs.

WARRANTY CLAIM PROCESSING INFORMATION

	Without Overhead Console		With Overhead Console	
	Lower Headliner and Inspect Only	Lower Headliner and Inspect and Modify Structural Foam	Lower Headliner and Inspect Only	Lower Headliner and Inspect and Modify Structural Foam
Warranty Type Code	R	R	R	R
Symptom Code	99	99	99	99
Damage Code	99	99	99	99
Process Number	J0602A	J0602A	J0602A	J0602A
Part Number Main Cause	5555-06-015A	5555-06-015A	5555-06-015A	5555-06-015A
Part Quantity	0	0	0	0
Labor Operation Number	YY433XRX	YY434XRX	YY435XRX	YY436XRX
Labor Hours	0.8	1.2	0.9	1.3

RENTAL CAR

A rental car may be provided to the customer if eligible based on the terms and conditions of the Rental Car Reimbursement Program, policy 12.0. Rental car reimbursements are available only on 2001 and newer vehicles within the mileage and time limitations under the New Vehicle Limited Warranty. If the customer was placed in a rental car while the campaign was being completed, submit a separate **claim/problem** using the standard rental claim information.

Warranty Type Code	A
Symptom Code	99
Damage Code	99
Part Number Main Cause	5555-RE-NTAL
Part Quantity	0
Labor Operation Code	MM012XRX
Labor Hours	0.0
Sublet – Rental Car	
Sublet Invoice Number	Number from Rental Invoice or Dealer Purchase Order
Sublet Type Code	Enter "L"
Sublet Amount	Up to $30.00 per day for the number of days customer had rental car

Rental expenses exceeding the two-day limit will require prior DCSM Authorization, as outlined in the Rental Car Reimbursement Program policy.

VERIFY THE VEHICLE NEEDS THE RECALL

1. Verify the vehicle is within the following ranges:

Model	VIN Range	Build Date Range
2005 Tribute	4F2YZ****5K M00003 – M62453	Job #1 through March 31, 2005

If the vehicle is within the above range, go to step 2.
If vehicle is not within the above range, return it to inventory or the customer.

2. Perform a Warranty Vehicle Inquiry using your eMDCS System and inspect vehicle for an Authorized Modification Label RECALL 4006D attached to the vehicle's bulkhead.

eMDCS System - Vehicle Status Inquiry Results

If eMDCS displays:	Campaign Label is:	Action to perform:
RECALL 4006D	Present	Contact the Mazda Corporate Dealer Assistance Group at (877) 727-6626 to update vehicle history
	Not present	Proceed to "REPAIR PROCEDURE"
RECALL 4006D CLOSED	Present	Return vehicle to inventory or customer
	Not present	Complete a label and apply to vehicle's hood or bulkhead
RECALL 4006D is not displayed	Does not apply	Recall does not apply to this vehicle. Return vehicle to inventory or customer

Note: Verify the recall number as the vehicle may have multiple labels.

REPAIR PROCEDURES

Please refer to Attachment II.

CONDITION OF CONCERN

On certain 2005 Tribute vehicles, the energy absorbing material located above the forward corners of the interior headliner may not absorb sufficient energy to conform to regulatory requirements.

SUBJECT VEHICLES

Model	VIN Range	Build Date Range
2005 Tribute	4F2 YZ****5K M00003-M62453	Job #1 through March 31, 2005

Note: The asterisk symbol "*" can be any letter or number.

OWNER NOTIFICATION

Mazda will notify U.S. owners by first class mail beginning May 31, 2006.

PARTS INFORMATION

Description	Part Number	Quantity	Note
Campaign Label	9999-95-065A-05	1=50 labels	Mstore (no charge)

PARTS ORDERING

Campaign labels are available in quantities of 50 per package by ordering through MStore.

SPECIAL SERVICE TOOL

Drill Guide (Jig)	AKS-42-411	1
5/8 Inch Auger Drill Bit	AKS-42-410	1

An initial shipment of a Drill Guide (Jig) and a 5/8" Auger Drill Bit will be shipped to dealers directly from the vendor beginning 5/26/06. Dealers should receive the special service tools by 5/30/06. Additional Drill Guides (Jigs) and 5/8" Auger Drill Bits can be ordered through M-Store for an additional cost. They cannot be ordered on the eMDCS Parts Ordering System. These parts are not inventoried at the PDCs.

WARRANTY CLAIM PROCESSING INFORMATION

	Without Overhead Console		With Overhead Console	
	Lower Headliner and Inspect Only	Lower Headliner and Inspect and Modify Structural Foam	Lower Headliner and Inspect Only	Lower Headliner and Inspect and Modify Structural Foam
Warranty Type Code	R	R	R	R
Symptom Code	99	99	99	99
Damage Code	99	99	99	99
Part Number Main Cause	5555-06-015A	5555-06-015A	5555-06-015A	5555-06-015A
Part Quantity	0	0	0	0
Labor Operation Number	YY433XRX	YY434XRX	YY435XRX	YY436XRX
Labor Hours	0.8	1.2	0.9	1.3

RENTAL CAR

A rental car may be provided to the customer if eligible based on the terms and conditions of the Rental Car Reimbursement Program, policy 12.0. Rental car reimbursements are available only on 2001 and newer vehicles within the mileage and time limitations under the New Vehicle Limited Warranty. If the customer was placed in a rental car while the campaign was being completed, submit a separate **claim/problem** using the standard rental claim information.

Warranty Type Code	A
Symptom Code	99
Damage Code	99
Part Number Main Cause	5555-RE-NTAL
Part Quantity	0
Labor Operation Code	MM012XRX
Labor Hours	0.0
Sublet – Rental Car	
Sublet Invoice Number	Number from Rental Invoice or Dealer Purchase Order
Sublet Type Code	Enter "L"
Sublet Amount	Up to $30.00 per day for the number of days customer had rental car

Rental expenses exceeding the two-day limit will require prior DCSM Authorization, as outlined in the Rental Car Reimbursement Program policy.

VERIFY THE VEHICLE NEEDS THE RECALL

1. Verify the vehicle is within the following ranges:

Model	VIN Range	Build Date Range
2005 Tribute	4F2YZ****5K M00003 – M62453	Job #1 through March 31, 2005

If the vehicle is within the above range, go to step 2.
If vehicle is not within the above range, return it to inventory or the customer.

2. Perform a Warranty Vehicle Inquiry using your eMDCS System and inspect vehicle for an Authorized Modification Label RECALL 4006D attached to the vehicle's bulkhead.

eMDCS System - Vehicle Status Inquiry Results

If eMDCS displays:	Campaign Label is:	Action to perform:
RECALL 4006D	Present	Contact the Mazda Corporate Dealer Assistance Group at (877) 727-6626 to update vehicle history
	Not present	Proceed to "REPAIR PROCEDURE"
RECALL 4006D CLOSED	Present	Return vehicle to inventory or customer
	Not present	Complete a label and apply to vehicle's hood or bulkhead
RECALL 4006D is not displayed	Does not apply	Recall does not apply to this vehicle. Return vehicle to inventory or customer

Note: Verify the recall number as the vehicle may have multiple labels.

REPAIR PROCEDURES

Please refer to Attachment II.

A. VEHICLE INSPECTION PROCEDURE

1. Verify that the vehicle is within the following ranges:
   - 2005 Tribute within the following VIN ranges: (built between Job #1 through March 31, 2005)
     4F2YZ****5KM00003 - 4F2YZ****5KM62453
   - If the vehicle is within the above ranges, proceed to Step 2.
   - If the vehicle is not within the above range, return the vehicle to the customer or inventory.
2. Perform a Warranty Vehicle Inquiry using your eMDCS System and inspect vehicle for a Campaign Label **Recall 4006D** attached to the vehicle's hood. Refer to eMDCS System - Warranty Vehicle Inquiry Results table below.

   NOTE: Verify Recall number as the vehicle may have multiple recalls.

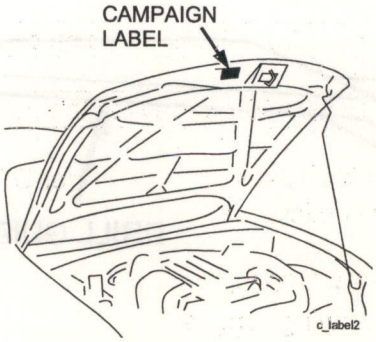

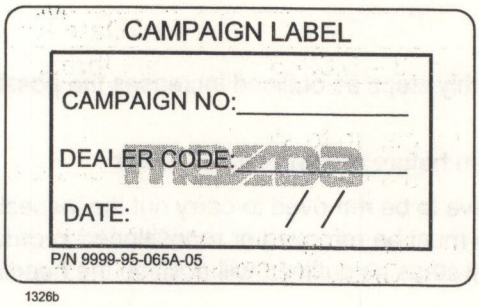

eMDCS System - Warranty Vehicle Inquiry Results

If eMDCS displays:	Campaign Label is:	Action to perform:
Recall 4006D OPEN	Present	Contact the Mazda Corporate Dealer Assistance Group at (877) 727-6626 to update vehicle history.
	Not present	Proceed to "REPAIR PROCEDURE".
Recall 4006D CLOSED	Present	Return vehicle to inventory or customer.
	Not present	Complete a label and apply to vehicle's hood.
Recall 4006D is not displayed	Does not apply	Recall does not apply to this vehicle. Return vehicle to inventory or customer.

OVERVIEW

This program involves inspecting the structural foam blocks mounted at the front corners on the top of the headliner. If necessary, the foam blocks will be modified by drilling two (2) holes in each block with a supplied drill guide and auger drill bit.

The purpose of this modification is to bring the foam blocks into compliance with FMVSS 201, Occupant Protection in Interior Impact. Vehicles equipped with a moonroof or side air curtains are not involved.

KIT CONTENTS

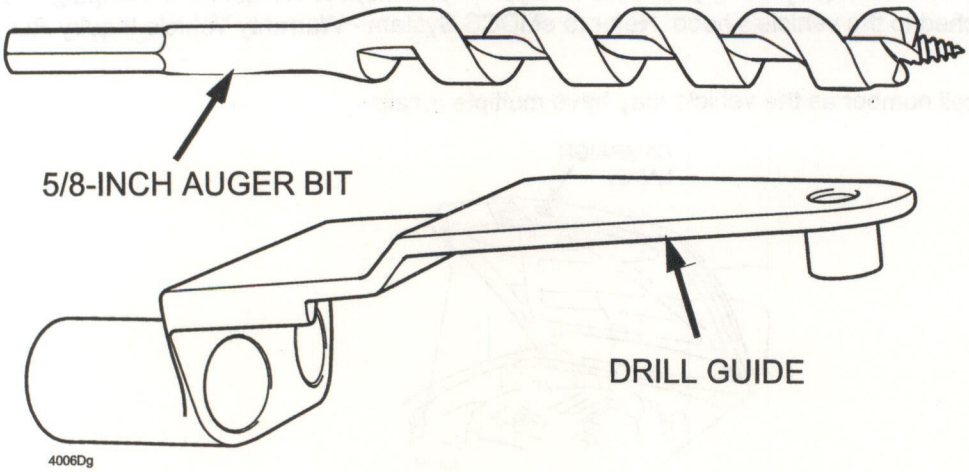

B. REPAIR PROCEDURE

CAUTION: Failure to perform all disassembly steps as outlined increases the possibility of damaging the headliner.

CAUTION: Make sure your hands are clean before performing this repair.

NOTE: Although the headliner does not have to be removed to carry out the inspection or modification, a number of trim panels and components must be removed or repositioned in order to lower the front of the headliner for access. Performing all steps as outlined will position the headliner adequately for access to the repair area.

NOTE: If the vehicle is equipped with any aftermarket or dealer-installed options, such as a DVD player which interferes with adequately lowering the headliner, they must be removed.

DISASSEMBLY FOR INSPECTION:

NOTE: Perform the following steps on both sides of the vehicle.

1. Open the A-pillar assist handle bolt covers, then remove the bolts and the assist handles.
2. Remove the A-pillar trim panels.
3. At the B-pillars, remove the D-ring covers and safety belt bolts.
4. Remove the upper B-pillar bolt covers and bolts, then remove the B-pillar trim panels.
5. If equipped, remove the overhead console retaining screws and disconnect the electrical connector, then

remove the console from the vehicle.

6. Remove the sunvisors and sunvisor clips. If equipped, disconnect the electrical connectors.
7. Open the rear seat overhead assist handle bolt covers, then remove the bolts and the assist handles.
8. Position the front and rear door weatherstrips down away from the headliner.
9. Allow the headliner to hang down loosely at the front corners. **Do not pull down on the headliner or otherwise stress it, or damage may result.**

INSPECTION:

1. Without pulling the headliner down beyond its natural hanging rest position, carefully inspect the structural foam blocks mounted at the passenger and drivers side front corners on the top of the headliner to see if they have one (1) or two (2) indentations.

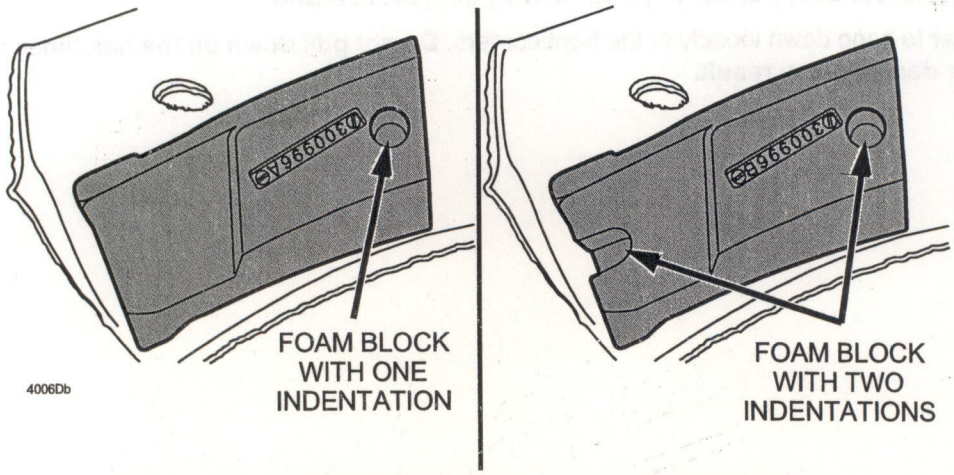

MUST BE MODIFIED

NO MODIFICATION NEEDED

- If the blocks have two (2) indentations, no modification is required. Proceed to ASSEMBLY.
- If the blocks have only one (1) indentation, proceed to DISASSEMBLY FOR MODIFICATION.

DISASSEMBLY FOR MODIFICATION:

1. Remove the interior lamp lens.
2. Remove the two (2) screws and the interior lamp, then disconnect the electrical connector.
3. Proceed to FOAM BLOCK MODIFICATION.

FOAM BLOCK MODIFICATION:

1. Using fender covers, seat covers or suitable rags, cover the defroster and instrument panel ducts so no chips can fall into the heater plenum.
2. Install a drill stop or apply suitable tape onto the drill bit 140 mm (5 1/2 in) from the end of the cutting portion of the bit (not from the threaded tip).

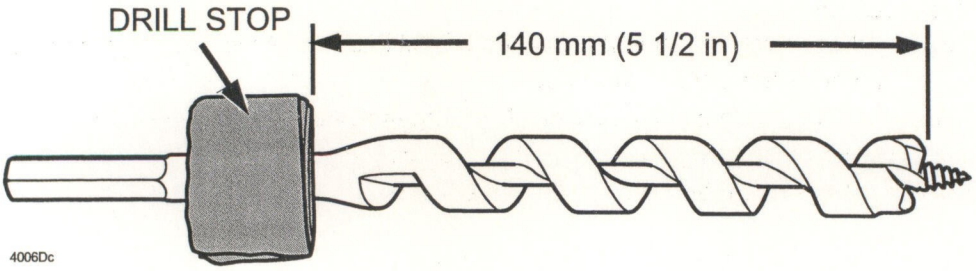

CAUTION: The weight of the tool when positioned on the foam block increases the risk of headliner damage. Hold the headliner up when the tool is positioned on the foam block.

3. Starting on either side of the vehicle, position the supplied drill guide onto the foam block so that the locating pin is set into the indentation on top of the block and the "wings" are resting on either side of the block, preventing the guide from moving side-to-side.

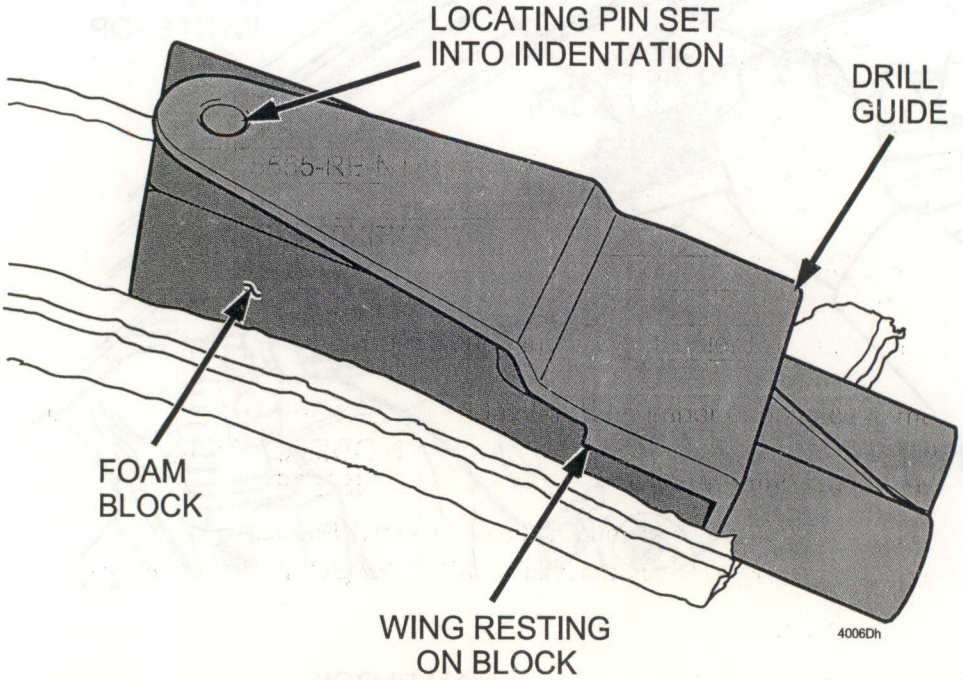

WARNING: WEAR SAFETY GLASSES.

CAUTION: DO NOT USE an air-powered drill for this operation. Oil spray from the tool may damage the foam block or other interior trim.

CAUTION: Be sure to keep the drill motor at full speed and frequently clear the chips from the bit while drilling each hole. Bore the holes at a slow to moderate pace using light to moderate pressure on the drill. Attempting to bore the holes at a fast pace using excessive pressure on the drill or failing to clear the chips from the bit may cause the foam blocks to crack.

NOTE: Be sure to allow the drill motor to achieve full speed before attempting to bore the hole.

4. **Drill the holes as follows:**
   A. Holding the drilling guide securely in place, position the drill bit in either of the two (2) guide holes.
   B. Start the drill motor and allow it to achieve full speed.
   C. Drill the hole at a slow to moderate pace, occasionally pulling the bit out to clear the chips.
   D. Drill the hole to the proper depth using the stop on the bit as your depth gauge.
   E. Drill the second hole in the same foam block in the same manner.

F. Repeat steps A – E on the foam block on the other side of the headliner.

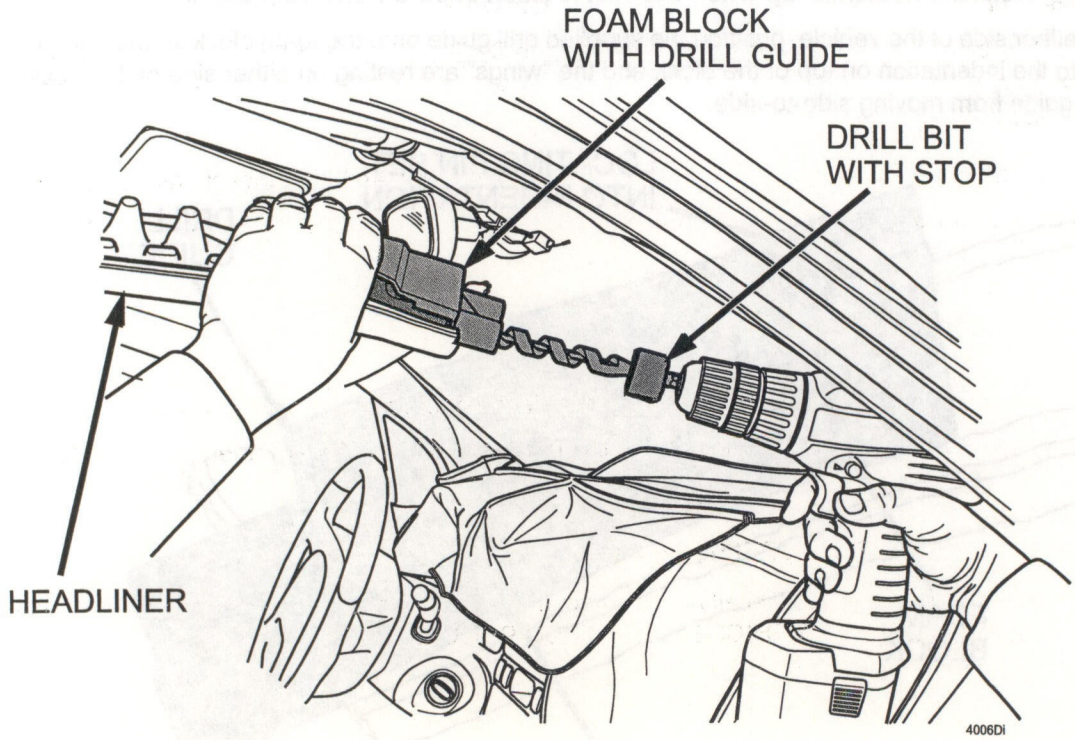

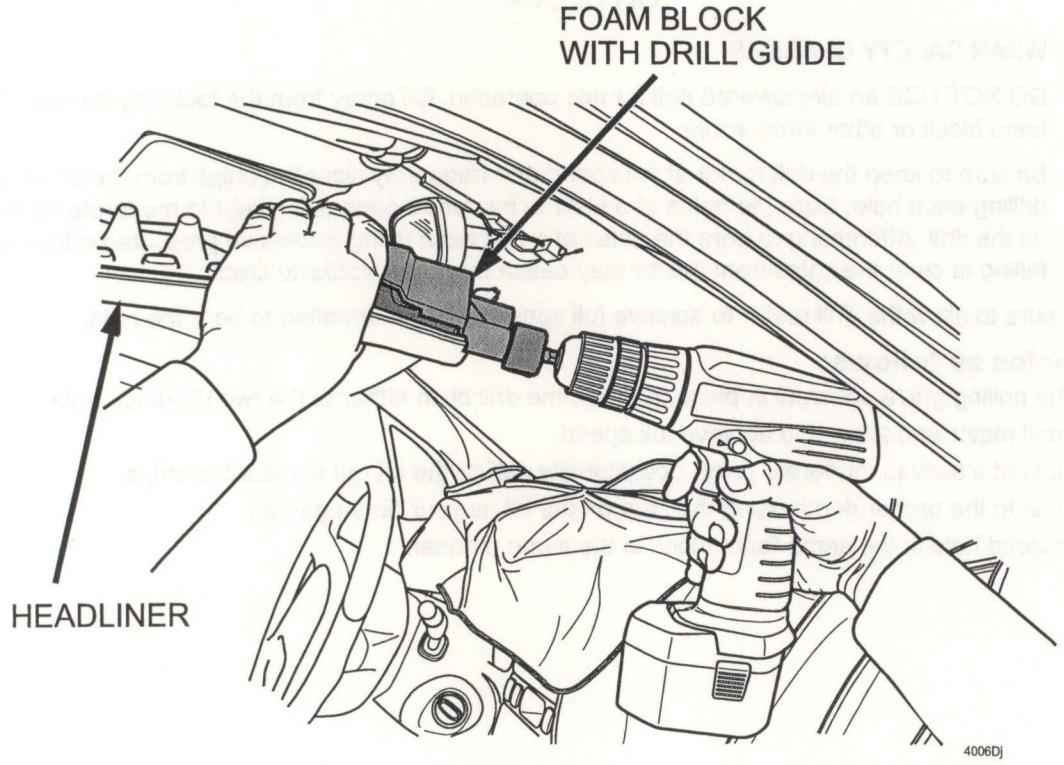

5. Thoroughly clean all foam chips from the vehicle. Remove the covers from the instrument panel and make sure no chips remain in the vehicle. Proceed to ASSEMBLY.

ASSEMBLY:

1. Position the B-pillar trim panels and install the bolts. Tighten to 7 Nm (62 lb-in), then install the bolt covers.
2. Position the safety belt and install the safety belt bolts at the B-pillar. Tighten to 53 Nm (39 lb-ft), then install the D-ring covers.
3. Install the A-pillar trim panels.
4. Install the passenger A-pillar assist handles and bolts. Tighten to 5 Nm (44 lb-in), then install the bolt covers.
5. Install the front and rear door weatherstrips.
6. Connect and install the overhead console, if equipped.
7. Install and connect the interior lamp and screws.
8. Install the interior lamp lens.
9. Install the sunvisors, connecting the electrical connectors if equipped, and the sunvisor clips.
10. Install the rear seat overhead assist handles and bolts. Tighten to 8 Nm (71 lb-in), then install the bolt covers.

C. CAMPAIGN LABEL INSTALLATION

Complete an "Campaign Label" with the Recall number written on the sticker and affix it to the vehicle's hood. Refer back to the illustration under "A. VEHICLE INSPECTION PROCEDURE".

May 2006

2005 Tribute Headliner Compliance Recall 4006D

Dear Mazda Owner:

This notice is sent to you in accordance with the requirements of the National Traffic and Motor Vehicle Safety Act.

Mazda Motor Corporation has decided that certain 2005 Tribute vehicles, produced through March 31, 2005 without optional side air curtains or a moon roof fail to conform to requirements specified in Federal Motor Vehicle Safety Standard (FMVSS 201U, Occupant Protection in Interior Impact). **If you are a recipient of this notice, your vehicle is included in this campaign.**

What is the problem?
In certain 2005 Tribute vehicles, the energy absorbing material located above the forward corners of the interior headliner may not absorb sufficient energy for your vehicle to conform to the requirements specified in Federal Motor Vehicle Safety Standard (FMVSS) No. 201U. In the event of a crash, an occupant could contact the location and may not be provided the interior impact protection intended.

What will Mazda do?
Your Mazda dealer will inspect the energy absorbing materials and, if necessary, modify them to increase their energy absorbing capability. This service will be performed **free of charge**. The inspection/repair should take approximately one hour to complete. However, it may take longer depending on the service workload at your Mazda dealership.

As a reminder, the Mazda Driver's Assurance Plan may provide alternate transportation when your vehicle is at an authorized Mazda dealership for a warranty repair. To be eligible for alternate transportation, your vehicle must be a 2001 or newer and within the mileage and time limitations under the Mazda New Vehicle Limited Warranty and adhere to the Rental Car Reimbursement policy. Ask your dealer for details about the Mazda Rental Car Reimbursement Program.

What should you do?
Mazda is concerned about your safety, and we encourage you to make an appointment with any authorized Mazda dealer to have the energy absorbing material located above the headliner inspected and if necessary, modified. You do not need to bring this notice to the dealer, but it may assist in the check-in process.

Where is the closest Mazda dealer?
To locate your nearest Mazda dealer, visit our web site and try our "Locate a Dealer" feature at www.MazdaUSA.com or consult your local yellow pages.

7755 Irvine Center Drive Irvine, CA 92628-2922
PO Box 19734 Irvine, CA 92623-9734 Facsimile 949.727.6101 Internet http://www.MazdaUSA.com

Moved or no longer own this vehicle?
If you have moved or no longer own your Tribute, please complete the enclosed prepaid *Information Change Card* as soon as possible. This enables us to update our records and notify the current owner.

Federal law requires that any vehicle lessor receiving this recall notice must forward a copy of this notice to the lessee within ten days.

Still have questions?
If you have any questions regarding this campaign, please contact our Customer Assistance Center at (800) 222-5500, option #4.

If Mazda or its dealers do not repair the defect free of charge and within a reasonable amount of time, you may notify the Administrator of the National Highway Traffic Safety Administration, 400 Seventh Street, SW., Washington, DC 20590; or call the toll-free Vehicle Safety Hotline at 1-888-327-4236 (TTY: 1-800-424-9153); or go to http://www.safercar.gov.

Your safety is a priority for Mazda. We actively work to improve our products and search for solutions to improve your ownership experience. Please accept our apologies for any inconvenience this program may have caused you.

Sincerely,

Mazda North American Operations