This file represents a consolidation of multiple files sent by the manufacturer. Please use the bookmarks to navigate to each file. (Each bookmark label is the name of the original file.)

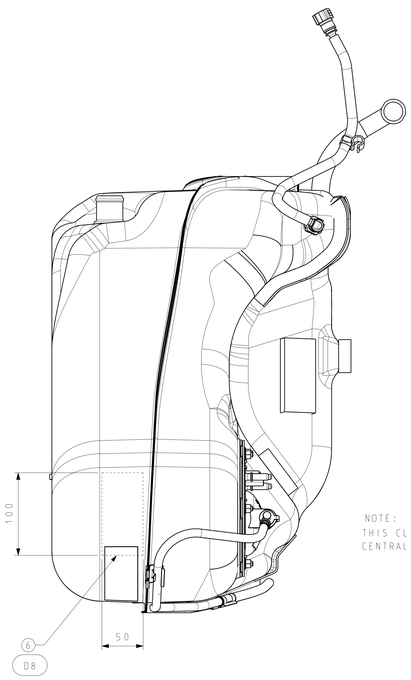

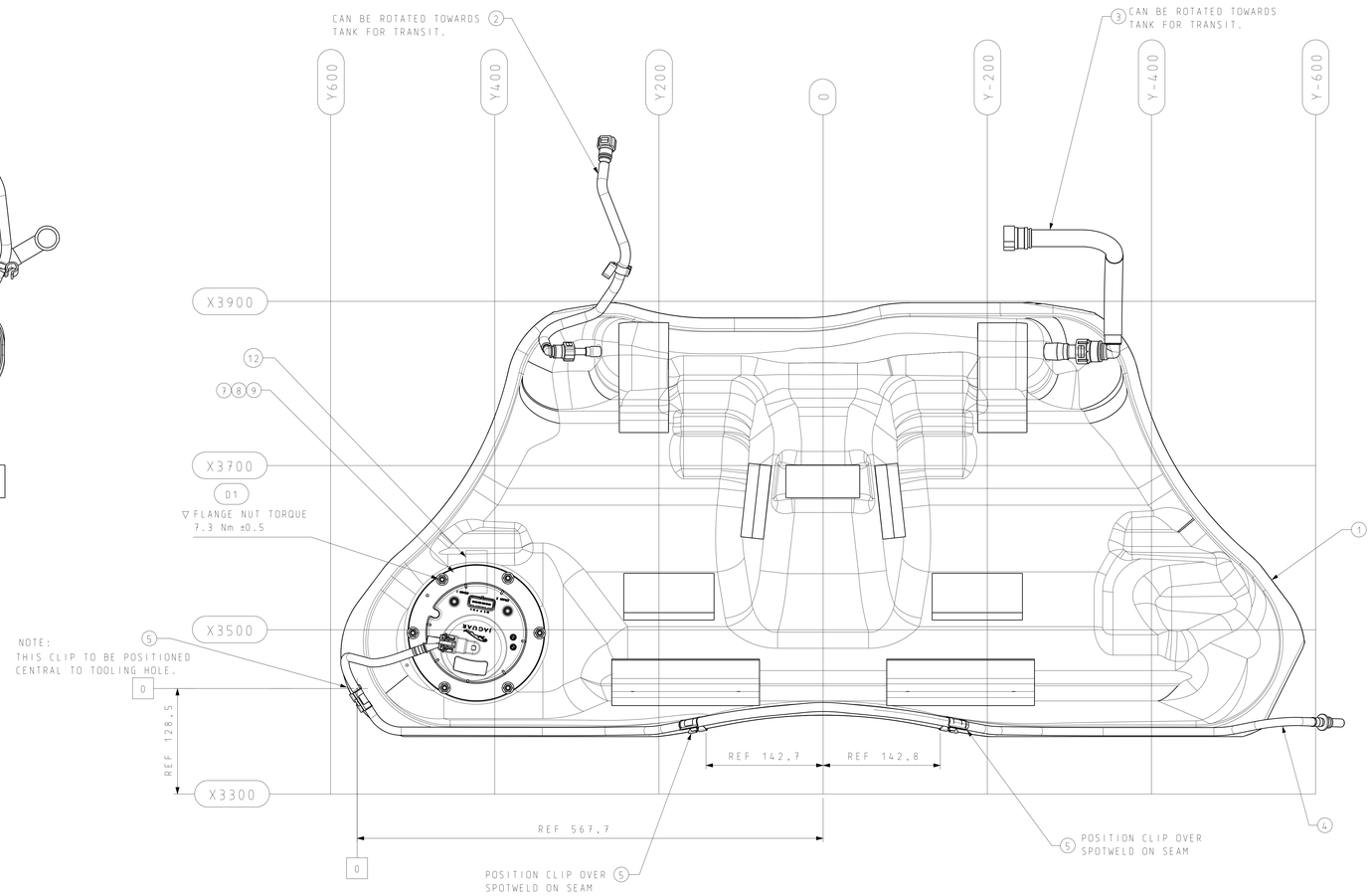

NOTES

REFER TO SHEET 2 OF 2 FOR DETAILED NOTES

	ITEM	QTY	PART NUMBER	PART NAME	REMARKS
H1 F1 C2	1	1	8W83-9002-AD	TANK & SENDER ASY - FUEL	
	2	1	8W83-9A186-AA	PIPE ASY-TNK VPR	
	3	1	6W83-9B050-AD	TUB/FU/TNK VPR OLET	
	4	1	8W83-9323-AA	TUB ASY-FU/TNK TO FU/FLTR	
D12	5	3	8W83-9A317-BA	CLIP - 10MM X 20DEG	TUBE PULL OUT FORCE 25.5N MINIMUM
C5	6	1	8W83-9K007-A_PIA01	IDENT LABEL	SEE DETAILS FOR LABEL REQUIREMENTS
D2	7	1	6W83-9276-AB	GSK-FU/TNK SDR	WHEN TAMPERED WITH MUST BE REPLACED
D3	8	1	6W83-9A307-AB	CLAMP-RING	
D4	9	6	W709952-S	NUT M6 HF PTM SPL SS	ONCE LOOSE MUST BE REPLACED
H2 G1 D5	10	1	8W83-9A309-AF	FLNG FU/TNK SDR & OLET TUB	
H3 E1 D6	11	1	8W83-9H307-AF	SDR & PMP ASY FU/TNK	NOT SHOWN
D7	12	1	8W83-9002-A_PIA03	TAMPER EVIDENT LABEL	IF LABEL IS BROKEN DO NOT FIT TO VEHICLE
E2 H4	13	1	8W83-9A299-AB	LEVEL SNSR ASY	SERVICE USE ONLY - NOT SHOWN - PIA ITEM 11

SC RESISTANCE TABLE

	LHS FDM	RHS JPM
EMPTY	51.2±0 OHMS	51.2±0 OHMS
C1 FULL	992.0±10.5 OHMS	992.0±10.5 OHMS

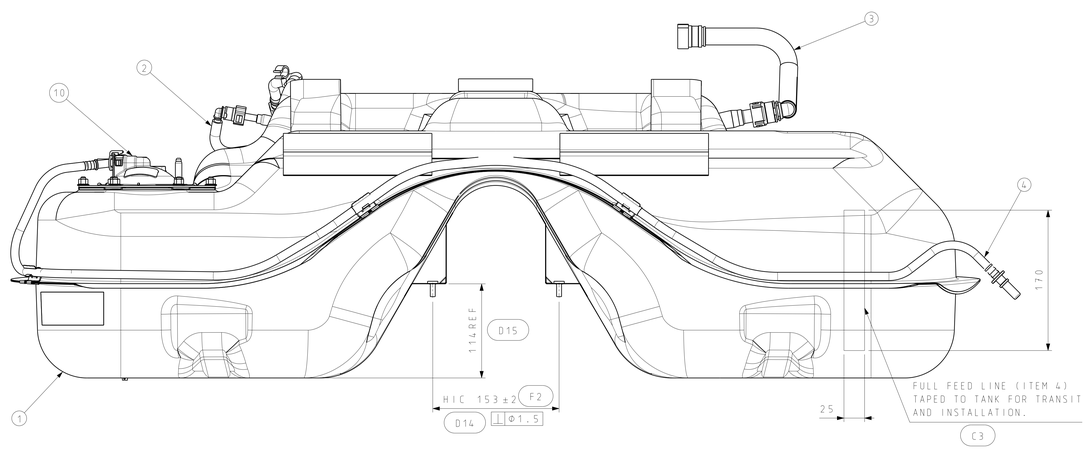

LTRS	REVISIONS		
ORIGINATOR	CHECKER	ENGR APP	MATL APP
RELEASE OF PART 8W83-9K007-AB UEP2 E 11983933 000 20070315			
JTYSON7	SWRIGH65	PGRAY18	MATSENG
RELEASE OF PART 8W83-9K007-AC C1 ±10.5 OHMS WAS ±1.5 OHMS C2 8W83-9002-AB WAS 8W83-9002-AA C3 ITEM 4 WAS ITEM 3 C4 EA STANDARD ADDED C5 LABEL DETAIL ADDED UEP2 E 12005998 000 20070716			
JSEERA1	MHUSSA66	PGRAY18	MATSENG
RELEASE OF PART 8W83-9K007-AD D1 TORQUE NOTE ADDED D2 ITEM 7 ADDED D3 ITEM 8 ADDED D4 ITEM 9 ADDED D5 ITEM 10 ADDED D6 ITEM 11 ADDED D7 ITEM 12 ADDED - TAMPER EVIDENT LABEL POSITION D8 ITEM 6 RE-LOCATED D9 SC REMOVED FROM ID LABEL SHT2 D10 VOLUME VS HEIGHT ADDED TO SHT3 D11 ALL CC/SC's & HIC's IDENTIFIED ON DRAWING D12 PULL OF LOAD INFO ADDED TO ITEM 5 D13 CRT DOCUMENT NOTE ADDED TO SHT2 D14 PERPENDICULARITY WAS 0.5 D15 TEXT HIC REMOVED UEP2 E 12083882 000 20080318			
AGRANT12	MHUSSA66	PGRAY18	MATSENG
E1 ITEM 11 WAS 8W83-9H307-AD E2 ITEM 13 ADDED UEP2 E 12124328 000 20080519			
PNAVANEE	MHUSSA66	PGRAY18	MATSENG
F1 ITEM 1 WAS 8W83-9002-AB F2 HIC TOLERANCE CHANGED FOR HEATSHIELD STUD POSITION UEP2 E 12143772 000 20080701			
PNAVANEE	AWHITEMA	PGRAY18	MATSENG
RELEASE OF 8W83-9K007-AF G1 ITEM 10 WAS 8W83-9A309-AD UEP2 E 12307951 000 20100107			
AGRANT12	AWHITEMA	PGRAY18	MATSENG

LTRS	REVISIONS		
ORIGINATOR	CHECKER	ENGR APP	MATL APP
REDRAWN FROM IDEA-S RELEASE OF 8W83-9K007-AG H1 ITEM 1 WAS 8W83-9002-AC H2 ITEM 10 WAS 8W83-9A309-AE H3 ITEM 11 WAS 8W83-9H307-AE H4 ITEM 13 WAS 8W83-9A310-AA UEP2 E S0022234 000 20111028			
HJAYARAM	PREDHEAD	PWADSWOR	MATSENG

REFERENCE	DS-J-X150-100100-C810-01 & 03		
PART MUST COMPLY WITH RESTRICTED SUBSTANCE MANAGEMENT STANDARD STJLR.99.9999 TO SAFEGUARD HEALTH, SAFETY AND THE ENVIRONMENT			
DRAFTED IN ACCORDANCE WITH JAGUAR LAND ROVER PLM STANDARDS CURRENT AT INITIAL RELEASE		3RD ANGLE PROJ DIMENSIONS ARE IN MILLIMETRES	
CAD TYPE K-CATIA5	CAD LOC. TC	CAD FILE 8W83-9K007-A-DWG-01	REV :1 / DTMC IS MASTER
DESIGN PREDHEAD	DETAIL HJAYARAM	DRAWING 8W83-9K007-AG	SHT 1 OF 3
CHECKED PREDHEAD	SAFETY N/A	TITLE TANK & SENDER ASSY FUEL	
SCALE 1:2	DATE 20111028		SIZE A0
JAGUAR CARS LIMITED			LAND ROVER

DO NOT SCALE FROM DRAWING PRINTED COPIES ARE UNCONTROLLED

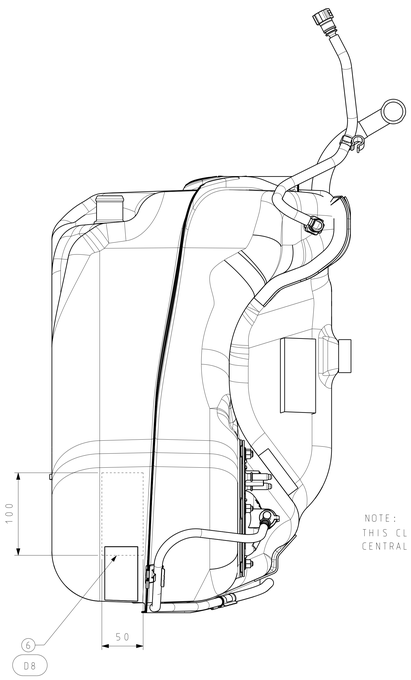

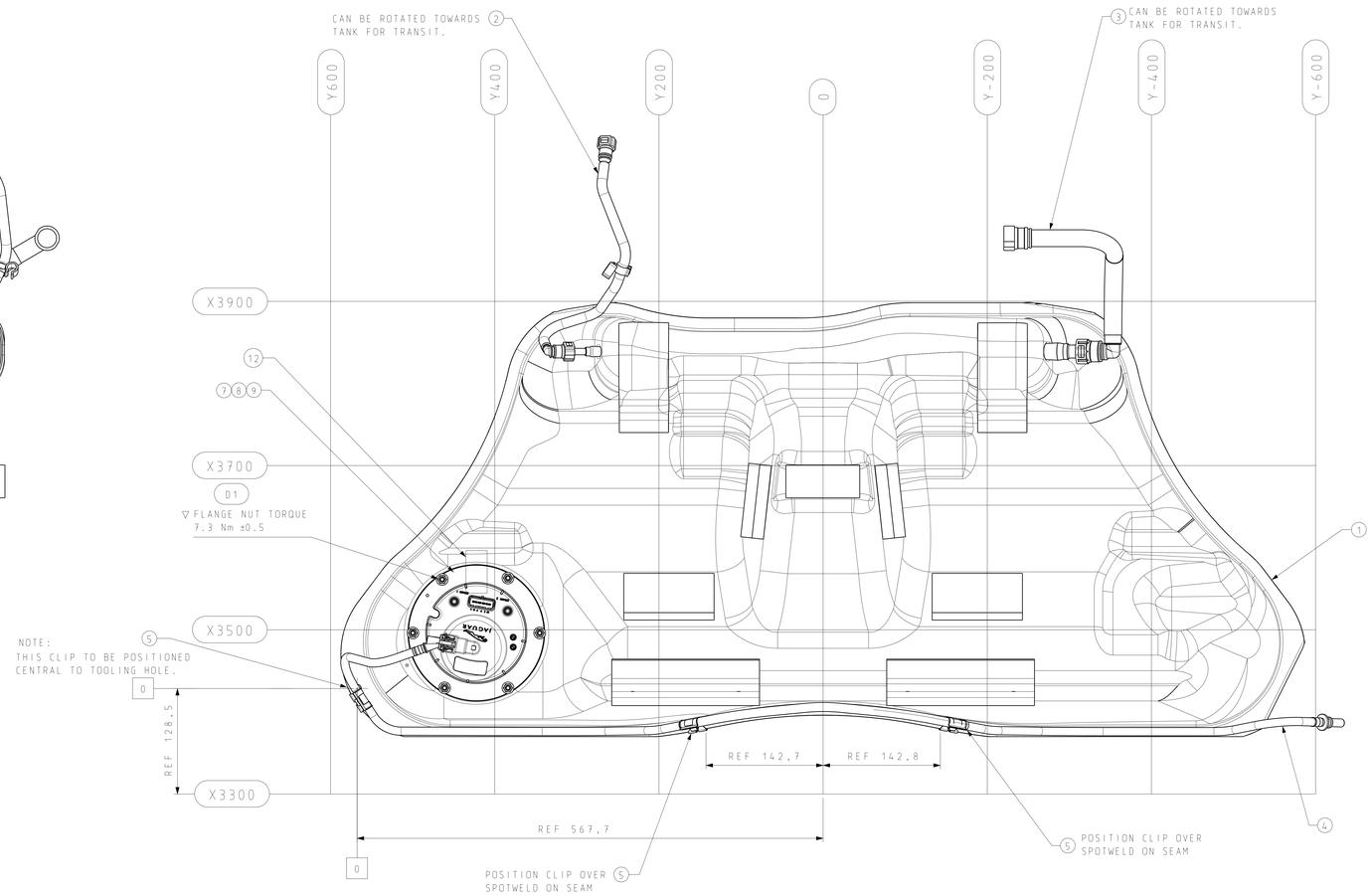

NOTES

REFER TO SHEET 2 OF 2 FOR DETAILED NOTES

	ITEM	QTY	PART NUMBER	PART NAME	REMARKS
H1 F1 C2	1	1	8W83-9002-AD	TANK & SENDER ASY - FUEL	
	2	1	8W83-9A186-AA	PIPE ASY-TNK VPR	
	3	1	6W83-9B050-AD	TUB/FU/TNK VPR OLET	
	4	1	8W83-9323-AA	TUB ASY-FU/TNK TO FU/FLTR	
D12	5	3	8W83-9A317-BA	CLIP - 10MM X 20DEG	TUBE PULL OUT FORCE 25.5N MINIMUM
C5	6	1	8W83-9K007-A_PIA01	IDENT LABEL	SEE DETAILS FOR LABEL REQUIREMENTS
D2	7	1	6W83-9276-AB	GSK-FU/TNK SDR	WHEN TAMPERED WITH MUST BE REPLACED
D3	8	1	6W83-9A307-AB	CLAMP-RING	
D4	9	6	W709952-S	NUT M6 HF PTM SPL SS	ONCE LOOSE MUST BE REPLACED
H2 G1 D5	10	1	8W83-9A309-AF	FLNG FU/TNK SDR & OLET TUB	
H3 E1 D6	11	1	8W83-9H307-AF	SDR & PMP ASY FU/TNK	NOT SHOWN
D7	12	1	8W83-9002-A_PIA03	TAMPER EVIDENT LABEL	IF LABEL IS BROKEN DO NOT FIT TO VEHICLE
E2 H4	13	1	8W83-9A299-AB	LEVEL SNSR ASY	SERVICE USE ONLY - NOT SHOWN - PIA ITEM 11

SC RESISTANCE TABLE

	LHS FDM	RHS JPM
EMPTY	51.2±0 OHMS	51.2±0 OHMS
C1 FULL	992.0±10.5 OHMS	992.0±10.5 OHMS

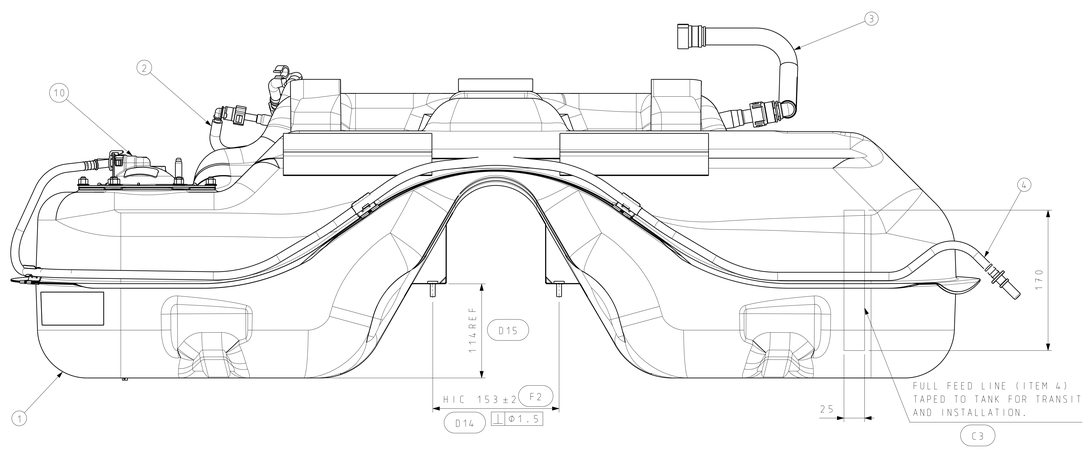

LTRS	REVISIONS		
ORIGINATOR	CHECKER	ENGR APP	MATL APP
RELEASE OF PART 8W83-9K007-AB UEP2 E 11983933 000 20070315			
JTYSON7	SWRIGH65	PGRAY18	MATSENG
RELEASE OF PART 8W83-9K007-AC C1 ±10.5 OHMS WAS ±1.5 OHMS C2 8W83-9002-AB WAS 8W83-9002-AA C3 ITEM 4 WAS ITEM 3 C4 EA STANDARD ADDED C5 LABEL DETAIL ADDED UEP2 E 12005998 000 20070716			
JSEERA1	MHUSSA66	PGRAY18	MATSENG
RELEASE OF PART 8W83-9K007-AD D1 TORQUE NOTE ADDED D2 ITEM 7 ADDED D3 ITEM 8 ADDED D4 ITEM 9 ADDED D5 ITEM 10 ADDED D6 ITEM 11 ADDED D7 ITEM 12 ADDED - TAMPER EVIDENT LABEL POSITION D8 ITEM 6 RE-LOCATED D9 SC REMOVED FROM ID LABEL SHT2 D10 VOLUME VS HEIGHT ADDED TO SHT3 D11 ALL CC/SC's & HIC's IDENTIFIED ON DRAWING D12 PULL OF LOAD INFO ADDED TO ITEM 5 D13 CRT DOCUMENT NOTE ADDED TO SHT2 D14 PERPENDICULARITY WAS 0.5 D15 TEXT HIC REMOVED UEP2 E 12083882 000 20080318			
AGRANT12	MHUSSA66	PGRAY18	MATSENG
E1 ITEM 11 WAS 8W83-9H307-AD E2 ITEM 13 ADDED UEP2 E 12124328 000 20080519			
PNAVANEE	MHUSSA66	PGRAY18	MATSENG
F1 ITEM 1 WAS 8W83-9002-AB F2 HIC TOLERANCE CHANGED FOR HEATSHIELD STUD POSITION UEP2 E 12143772 000 20080701			
PNAVANEE	AWHITEMA	PGRAY18	MATSENG
RELEASE OF 8W83-9K007-AF G1 ITEM 10 WAS 8W83-9A309-AD UEP2 E 12307951 000 20100107			
AGRANT12	AWHITEMA	PGRAY18	MATSENG

LTRS	REVISIONS		
ORIGINATOR	CHECKER	ENGR APP	MATL APP
REDRAWN FROM IDEA-S RELEASE OF 8W83-9K007-AG H1 ITEM 1 WAS 8W83-9002-AC H2 ITEM 10 WAS 8W83-9A309-AE H3 ITEM 11 WAS 8W83-9H307-AE H4 ITEM 13 WAS 8W83-9A310-AA UEP2 E S0022234 000 20111028			
HJAYARAM	PREDHEAD	PWADSWOR	MATSENG

REFERENCE	DS-J-X150-100100-C810-01 & 03		
PART MUST COMPLY WITH RESTRICTED SUBSTANCE MANAGEMENT STANDARD STJLR.99.9999 TO SAFEGUARD HEALTH, SAFETY AND THE ENVIRONMENT			
DRAFTED IN ACCORDANCE WITH JAGUAR LAND ROVER PLM STANDARDS CURRENT AT INITIAL RELEASE		3RD ANGLE PROJ DIMENSIONS ARE IN MILLIMETRES	
CAD TYPE K-CATIA5	CAD LOC. TC	CAD FILE 8W83-9K007-A-DWG-01	REV :1 / DTMC IS MASTER
DESIGN PREDHEAD	DETAIL HJAYARAM	DRAWING 8W83-9K007-AG	SHT 1 OF 3
CHECKED PREDHEAD	SAFETY N/A	TITLE TANK & SENDER ASSY FUEL	
SCALE 1:2	DATE 20111028		SIZE A0
JAGUAR CARS LIMITED			LAND ROVER

DO NOT SCALE FROM DRAWING PRINTED COPIES ARE UNCONTROLLED

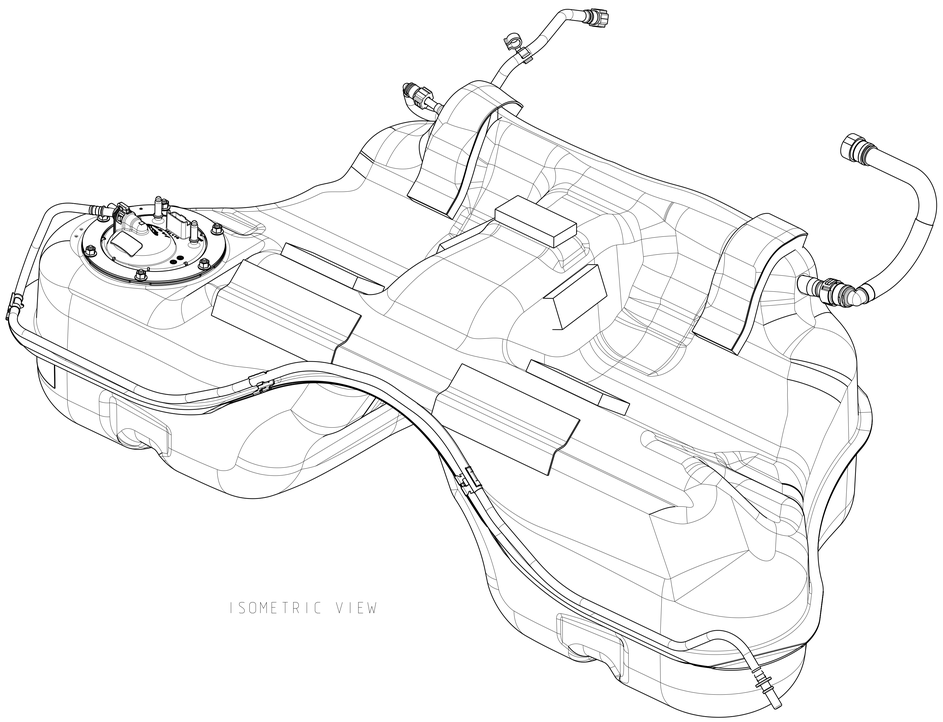

ISOMETRIC VIEW

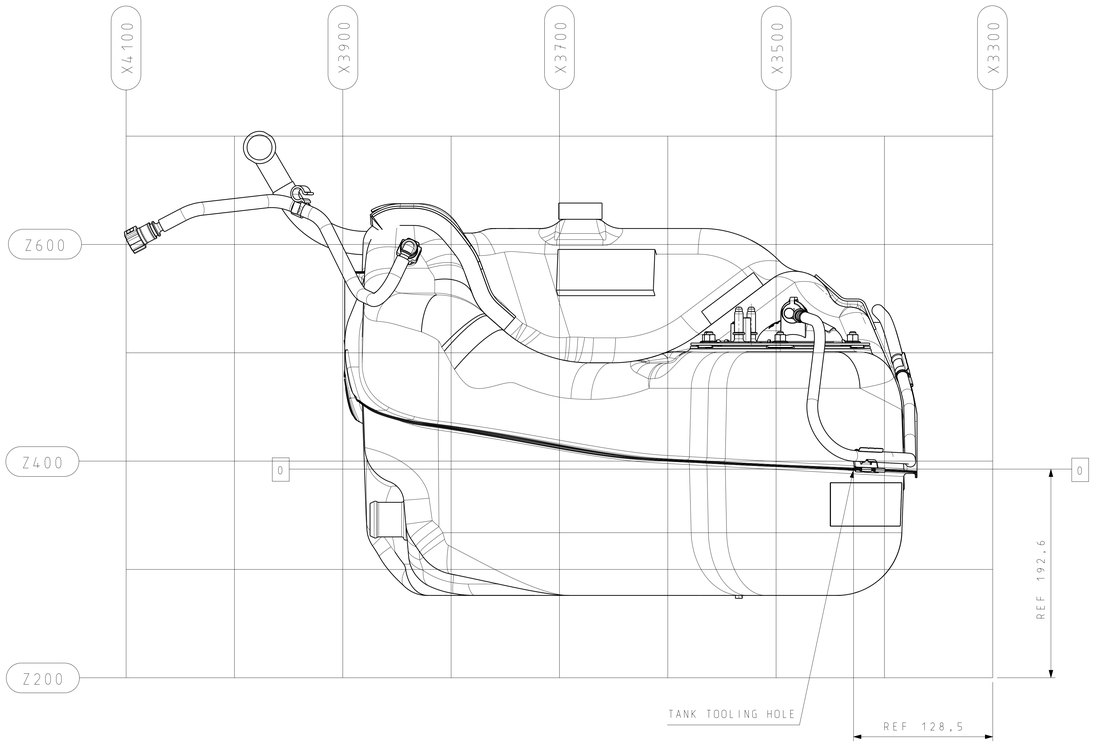

NOTES:

▽ LEAK TEST ACCORDING TO ES-YU5A-9000-AC (TEST III B)

AFTER LEAK TESTING, NO PART TO BE REMOVED OR CHANGED WITHOUT RETESTING.

▽ MUST CONFORM TO ENGINEERING STANDARD ES-3U5A-9002-AA

SC CLEANLINESS TO JPS SPEC C1013 SECTION 27

PART MUST COMPLY WITH MATERIAL CONTROL, BLACK GREY BOX PROGRAM SPEC WSS-M99P23-B

ALL SELF ADHESIVE PADS, LABELS AND TAPE TO PERFORM TO JMS 20.11.01.G2

PART BRANDING TO FORD MOTOR COMPANY STANDARDS E3

C4 THIS ASSEMBLY AND ANY SUB COMPONENTS TO COMPLY WITH FORD CAN AND DRAFTING STANDRAD E4 (IDENTIFICATION OF POLYMER MATERIALS)

LIQUID CAPACITY (AS PER FU-1047) 71.0 LITERS
ADVERTISED CAPACITY (AS PER FU-1050) 70.6 LITRES

NO LUBRICATION TO BE USED DURING MANUFACTURE OF PARTS(S) TO ASSEMBLE COMPONENT PART(S) OR TO ASSEMBLE COMPONENT(S) TO VEHICLE UNLESS AUTHORISED AND APPROVED BY JAGUAR MATERIALS AND FUEL SYSTEM ENGINEERING DEPARTMENTS.

ASSEMBLY MUST BE FREE INTERNALLY FROM WATER, ALL MANUFACTURING PROCESSING FLUIDS AND ANY PRESSURE TEST FLUIDS

ALL ORIFICES, VENT LINES, HOSES ETC TO BE SEALED FOR TRANSPORT AND STORAGE PURPOSES. ASSOCIATED PLUGS, CAPS ETC MUST RETAIN EFFECTIVE DURING PROLONGED PEROIDS OF STORAGE/PALLETIASATION AND MUST PROTECT SEALING SURFACES.

ALL PLUGS, CAPS ETC MUST BE EASILY REMOVABLE WITHOUT TOOLS. IT MUST NOT BE POSSIBLE TO FIT ASSEMBLY TO MATING COMPONENTS WITH CAPS/PLUGS IN PLACE.

ASSEMBLE TO SHOW NO DETRIMENTAL EFFECT DURING STORAGE FOR A MINIMUM OF SIX MONTHS AT ROOM TEMPARATURE.

PART BRANDING/TRACEABILITY LABEL IS ONLY TO BE ISSUED WHEN COMPONENT HAS PASSED PRODUCTION LINE LEAK TESTING.

100% OPERATOR PULL BACK CHECK BY HAND ON ITEMS 2 & 3 CONNECTOR BODIES AFTER ASSEMBLY TO ENSURE JOINTS ARE LATCHED AND SECURE.

ASSEMBLIES TO BE PALLETISED/STILLAGED SUCHTHAT NO INTERNAL OR EXTERNAL DAMAGE OR CONTAMINATION DURING STORAGE.

ASSEMBLY TO BE TRANSPORTED, STORED AND PALLETISED SUCH THAT IT REMAINS FLAT IN THE NORMAL VEHICLE INTENT POSITION SUCH THAT NO DAMAGE CAN OCCUR TO ANY INTERNAL PARTS OR EXTERNAL PARTS/FEATURES OF THE ASSEMBLY.

HIC BLOW OFF CHECK TO ITEM 4 TO BE DONE AT A PRESSURE OF 240KPa
▽ ROLLOVER VACUUM CHECK ELECTRICAL CONNECTIONS TO PUMP REFER TO UEES CONTROL PLAN.

IN FINAL ASSEMBLY FLOAT TRAVEL SHOULD NOT BE RESTRICTED. PERFORM SENDER RESISTANCE CHECK AT EMPTY, FULL AND EMPTY STOPS.

BURRS-SHARP EDGES AND FOREIGN MATERIAL RESULTING FROM GOOD MANUFACTURING PRACTICES ARE ACCEPTABLE PROVIDING THEY ARE NOT DETRIMENTAL TO ASSEMBLY, FUNCTION OR SAFE HANDLING AS DETERMINED BY FORD PRODUCT ENGINEERNG.

HIC FOLLOWING DELIVERY, THE PUMP MUST NOT BE ENERGISED (6 VOLTS <4 AMPS) FOR MORE THAN 2 x 5 SECONDS MAX DURATION IN A DRY CONDITION.

MANUFACTURER TO ESTABLISH PRODUCT ENGINEERING APPROVAL CONTROL PLAN.

D13 FOR COMPREHENSIVE LIST OF CC/SC'S & HIC'S PLEASE REFER TO CRT DOCUMENT.

ENGINEERING APPROVAL OF A MINIMUM OF 6 SAMPLES FROM EACH SUPPLIER IS REQUIRED PRIOR TO FIRST SHIPMENT OF PARTS FOR INITAL RELEASE AND ALL SUBSEQUENT CHANGE REQUESTS.

THE MASTER SOURCE OF INFORMATION FOR THIS DRAWING IS IN A PD COMPUTER DATABASE. CHANGES ARE NOT PERMITTED WITHOUT PRIOR CONSENT OF THE ENGINEERING CAD AREA.

FOR THE PURPOSES OF GEOMETRIC TOLERANCING ALL DIMENSIONAL INFORMATION CONTAINED WITHIN THE CAD MODEL IS BASIC.

▽ CONTROL ITEM - THE ▽ ALSO IDENTIFIES CRITICAL CHARACTERISTICS DESIGNATED BY THE CROSS FUNCTIONAL TEAMS DEVELOPING THE PRODUCT. THESE AND ADDITIONAL CRITICAL CHARACERISTICS IDENTIFIED BY PROCESS REVIEWS, MUST APPEAR ON THE CONTROL PLANS ACCORING TO QS9000 THESE CONTROL PLANS REQUIRE PRODUCT ENGINEERING APPROVAL

MATERIALS DEFINED BY ES/W5-M CALL-OUTS REQUIRE PRIOR ENGINEERING APPROVAL. SEE FORD ENGINEERING STANDARDS ENGINEERING MATERIAL APPROVED SOURCE LIST

CORROSION PROTECTION FOR SERVICE PARTS MUST COMPLY WITH FORD CUSTOMER SERVICE DIVISION (FCSD) PACKAGING AND SHIPPING GUIDE.

CHANGES AFFECTING DESIGN COMPOSITION OR PROCESSING OF THE PART PREVIOUSLY APPROVED FOR PRODUCTION REQUIRE PRIOR APPROVAL FROM FORD PRODUCT ENGINEERING REF QS 9000

FOR THE CURRENT RELEASE STATUS
SEE THE WERS ENGINEERING NOTICE

THIS DRAWING HAS BEEN PREPARED BY OR ON BEHALF OF FORD MOTOR COMPANY. FORD RETAINS ALL COMMON LAW, STATUTORY AND OTHER RESERVED RIGHTS, INCLUDING COPYRIGHTS. THIS DRAWING SHALL NOT BE USED FOR ANY PURPOSE OTHER THAN PERFORMING SERVICES DIRECTLY OR INDIRECTLY TO FORD, WITHOUT THE EXPRESSED WRITTEN PERMISSION OF FORD. UNAUTHORIZED USE, COPYING OR MODIFICATION , INCLUDING THE REMOVAL OF THIS NOTE , MAY CONSTITUTE A VIOLATION OF CIVIL OR CRIMINAL LAWS ENFORCABLE BY FORD OR GOVERNMENTAL AGENCIES.
COPYRIGHT © FORD COMPANY (1996)

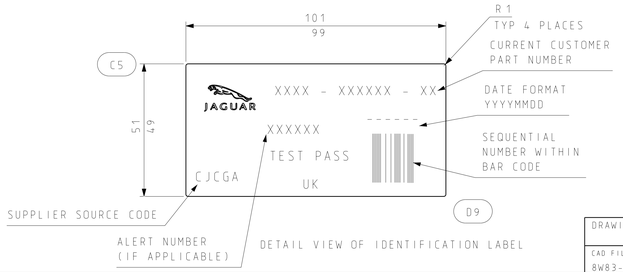

DETAIL VIEW OF IDENTIFICATION LABEL

DRAWING	REV	SHT 2
8W83-9K007-AG	1	OF 3
CAD FILE 8W83-9K007-A-DWG-01	JAGUAR CARS LIMITED / LAND ROVER	

PRINTED COPIES ARE UNCONTROLLED

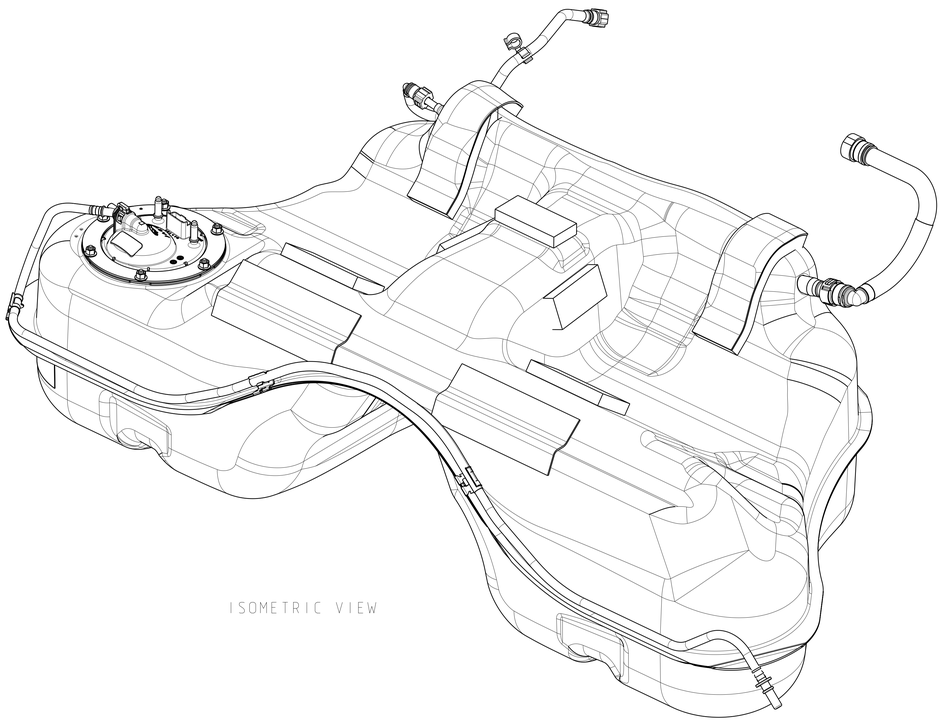

ISOMETRIC VIEW

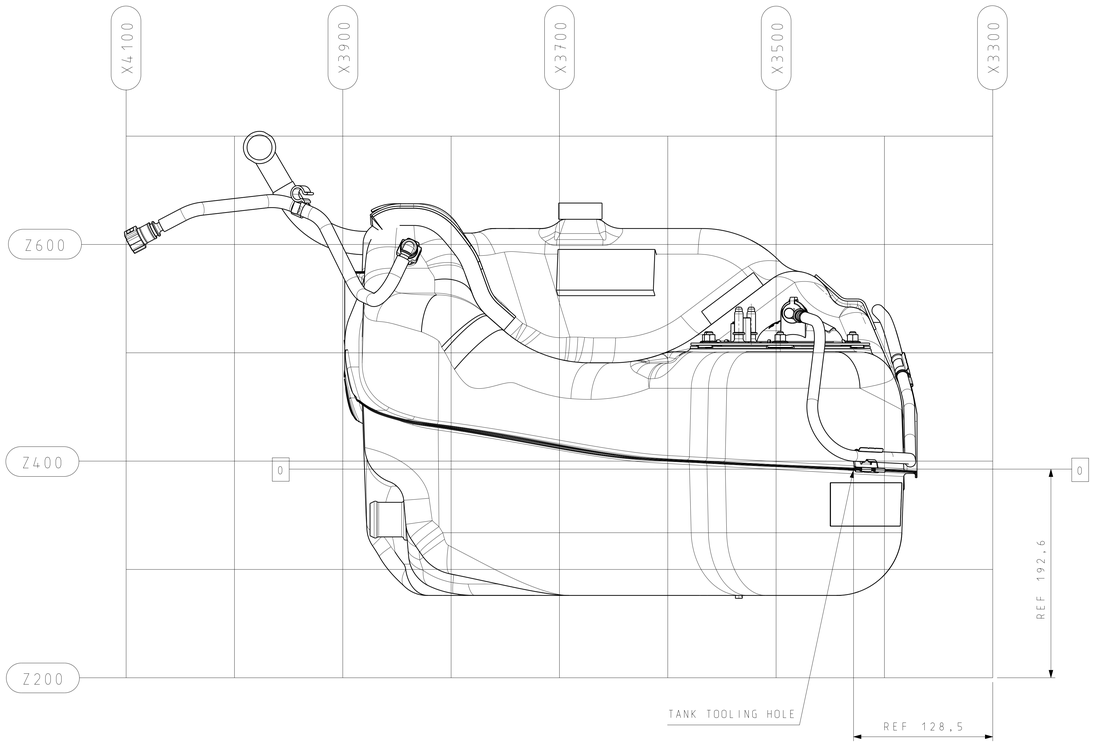

NOTES:

▽ LEAK TEST ACCORDING TO ES-YU5A-9000-AC (TEST III B)

AFTER LEAK TESTING, NO PART TO BE REMOVED OR CHANGED WITHOUT RETESTING.

▽ MUST CONFORM TO ENGINEERING STANDARD ES-3U5A-9002-AA

SC CLEANLINESS TO JPS SPEC C1013 SECTION 27

PART MUST COMPLY WITH MATERIAL CONTROL, BLACK GREY BOX PROGRAM SPEC WSS-M99P23-B

ALL SELF ADHESIVE PADS, LABELS AND TAPE TO PERFORM TO JMS 20.11.01.G2

PART BRANDING TO FORD MOTOR COMPANY STANDARDS E3

C4 THIS ASSEMBLY AND ANY SUB COMPONENTS TO COMPLY WITH FORD CAN AND DRAFTING STANDRAD E4 (IDENTIFICATION OF POLYMER MATERIALS)

LIQUID CAPACITY (AS PER FU-1047) 71.0 LITERS
ADVERTISED CAPACITY (AS PER FU-1050) 70.6 LITRES

NO LUBRICATION TO BE USED DURING MANUFACTURE OF PARTS(S) TO ASSEMBLE COMPONENT PART(S) OR TO ASSEMBLE COMPONENT(S) TO VEHICLE UNLESS AUTHORISED AND APPROVED BY JAGUAR MATERIALS AND FUEL SYSTEM ENGINEERING DEPARTMENTS.

ASSEMBLY MUST BE FREE INTERNALLY FROM WATER, ALL MANUFACTURING PROCESSING FLUIDS AND ANY PRESSURE TEST FLUIDS

ALL ORIFICES, VENT LINES, HOSES ETC TO BE SEALED FOR TRANSPORT AND STORAGE PURPOSES. ASSOCIATED PLUGS, CAPS ETC MUST RETAIN EFFECTIVE DURING PROLONGED PEROIDS OF STORAGE/PALLETIASATION AND MUST PROTECT SEALING SURFACES.

ALL PLUGS, CAPS ETC MUST BE EASILY REMOVABLE WITHOUT TOOLS. IT MUST NOT BE POSSIBLE TO FIT ASSEMBLY TO MATING COMPONENTS WITH CAPS/PLUGS IN PLACE.

ASSEMBLE TO SHOW NO DETRIMENTAL EFFECT DURING STORAGE FOR A MINIMUM OF SIX MONTHS AT ROOM TEMPARATURE.

PART BRANDING/TRACEABILITY LABEL IS ONLY TO BE ISSUED WHEN COMPONENT HAS PASSED PRODUCTION LINE LEAK TESTING.

100% OPERATOR PULL BACK CHECK BY HAND ON ITEMS 2 & 3 CONNECTOR BODIES AFTER ASSEMBLY TO ENSURE JOINTS ARE LATCHED AND SECURE.

ASSEMBLIES TO BE PALLETISED/STILLAGED SUCHTHAT NO INTERNAL OR EXTERNAL DAMAGE OR CONTAMINATION DURING STORAGE.

ASSEMBLY TO BE TRANSPORTED, STORED AND PALLETISED SUCH THAT IT REMAINS FLAT IN THE NORMAL VEHICLE INTENT POSITION SUCH THAT NO DAMAGE CAN OCCUR TO ANY INTERNAL PARTS OR EXTERNAL PARTS/FEATURES OF THE ASSEMBLY.

HIC BLOW OFF CHECK TO ITEM 4 TO BE DONE AT A PRESSURE OF 240KPa
▽ ROLLOVER VACUUM CHECK ELECTRICAL CONNECTIONS TO PUMP REFER TO UEES CONTROL PLAN.

IN FINAL ASSEMBLY FLOAT TRAVEL SHOULD NOT BE RESTRICTED. PERFORM SENDER RESISTANCE CHECK AT EMPTY, FULL AND EMPTY STOPS.

BURRS-SHARP EDGES AND FOREIGN MATERIAL RESULTING FROM GOOD MANUFACTURING PRACTICES ARE ACCEPTABLE PROVIDING THEY ARE NOT DETRIMENTAL TO ASSEMBLY, FUNCTION OR SAFE HANDLING AS DETERMINED BY FORD PRODUCT ENGINEERNG.

HIC FOLLOWING DELIVERY, THE PUMP MUST NOT BE ENERGISED (6 VOLTS <4 AMPS) FOR MORE THAN 2 x 5 SECONDS MAX DURATION IN A DRY CONDITION.

MANUFACTURER TO ESTABLISH PRODUCT ENGINEERING APPROVAL CONTROL PLAN.

D13 FOR COMPREHENSIVE LIST OF CC/SC'S & HIC'S PLEASE REFER TO CRT DOCUMENT.

ENGINEERING APPROVAL OF A MINIMUM OF 6 SAMPLES FROM EACH SUPPLIER IS REQUIRED PRIOR TO FIRST SHIPMENT OF PARTS FOR INITAL RELEASE AND ALL SUBSEQUENT CHANGE REQUESTS.

THE MASTER SOURCE OF INFORMATION FOR THIS DRAWING IS IN A PD COMPUTER DATABASE. CHANGES ARE NOT PERMITTED WITHOUT PRIOR CONSENT OF THE ENGINEERING CAD AREA.

FOR THE PURPOSES OF GEOMETRIC TOLERANCING ALL DIMENSIONAL INFORMATION CONTAINED WITHIN THE CAD MODEL IS BASIC.

▽ CONTROL ITEM - THE ▽ ALSO IDENTIFIES CRITICAL CHARACTERISTICS DESIGNATED BY THE CROSS FUNCTIONAL TEAMS DEVELOPING THE PRODUCT. THESE AND ADDITIONAL CRITICAL CHARACERISTICS IDENTIFIED BY PROCESS REVIEWS, MUST APPEAR ON THE CONTROL PLANS ACCORING TO QS9000 THESE CONTROL PLANS REQUIRE PRODUCT ENGINEERING APPROVAL

MATERIALS DEFINED BY ES/W5-M CALL-OUTS REQUIRE PRIOR ENGINEERING APPROVAL. SEE FORD ENGINEERING STANDARDS ENGINEERING MATERIAL APPROVED SOURCE LIST

CORROSION PROTECTION FOR SERVICE PARTS MUST COMPLY WITH FORD CUSTOMER SERVICE DIVISION (FCSD) PACKAGING AND SHIPPING GUIDE.

CHANGES AFFECTING DESIGN COMPOSITION OR PROCESSING OF THE PART PREVIOUSLY APPROVED FOR PRODUCTION REQUIRE PRIOR APPROVAL FROM FORD PRODUCT ENGINEERING REF QS 9000

FOR THE CURRENT RELEASE STATUS
SEE THE WERS ENGINEERING NOTICE

THIS DRAWING HAS BEEN PREPARED BY OR ON BEHALF OF FORD MOTOR COMPANY. FORD RETAINS ALL COMMON LAW, STATUTORY AND OTHER RESERVED RIGHTS, INCLUDING COPYRIGHTS. THIS DRAWING SHALL NOT BE USED FOR ANY PURPOSE OTHER THAN PERFORMING SERVICES DIRECTLY OR INDIRECTLY TO FORD, WITHOUT THE EXPRESSED WRITTEN PERMISSION OF FORD. UNAUTHORIZED USE, COPYING OR MODIFICATION , INCLUDING THE REMOVAL OF THIS NOTE , MAY CONSTITUTE A VIOLATION OF CIVIL OR CRIMINAL LAWS ENFORCABLE BY FORD OR GOVERNMENTAL AGENCIES.
COPYRIGHT © FORD COMPANY (1996)

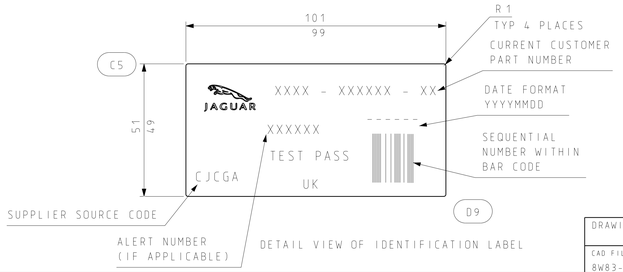

DETAIL VIEW OF IDENTIFICATION LABEL

DRAWING	REV	SHT 2
8W83-9K007-AG	1	OF 3
CAD FILE 8W83-9K007-A-DWG-01	JAGUAR CARS LIMITED / LAND ROVER	

PRINTED COPIES ARE UNCONTROLLED

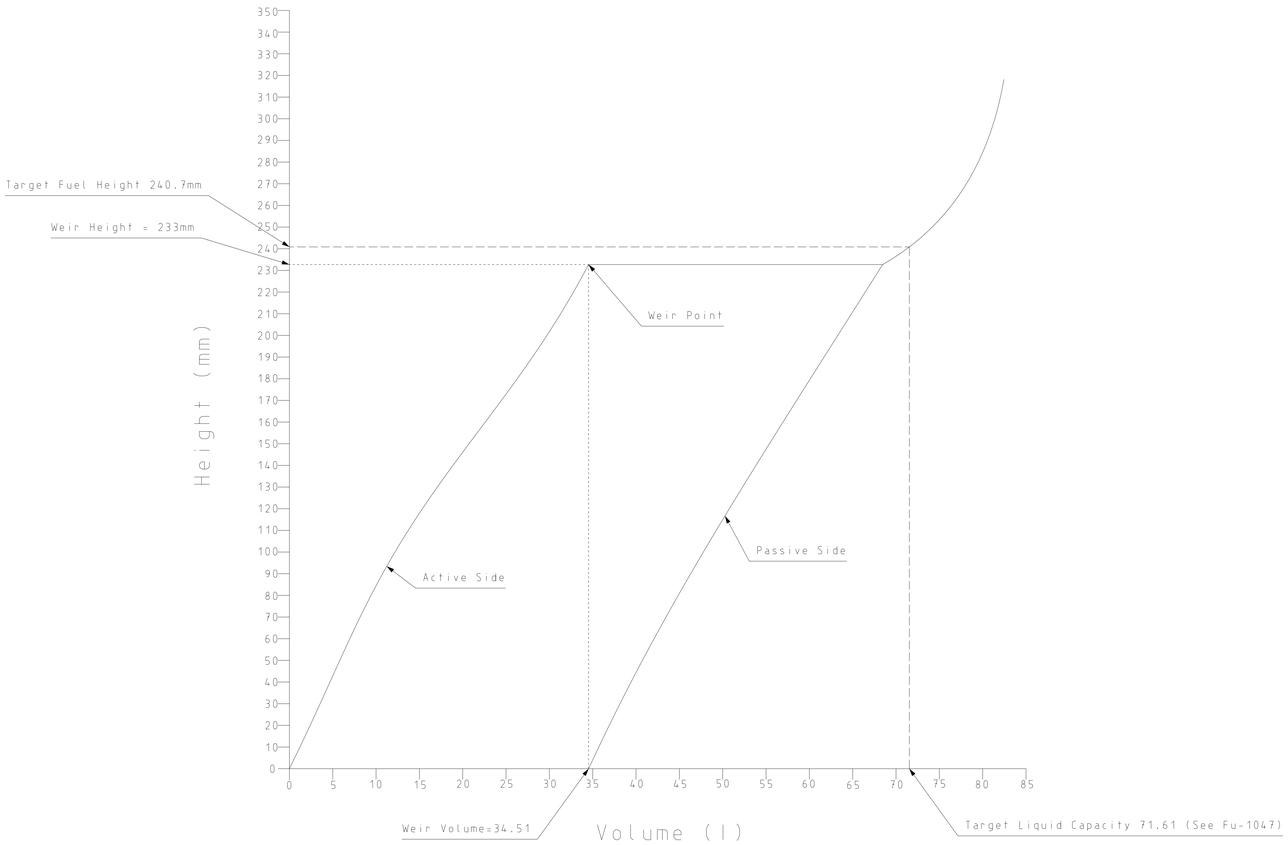

DRAWING	REV	SHT 3
8W83-9K007-AG	1	OF 3
CAD FILE 8W83-9K007-A-DWG-01	JAGUAR CARS LIMITED	LAND ROVER

PRINTED COPIES ARE UNCONTROLLED

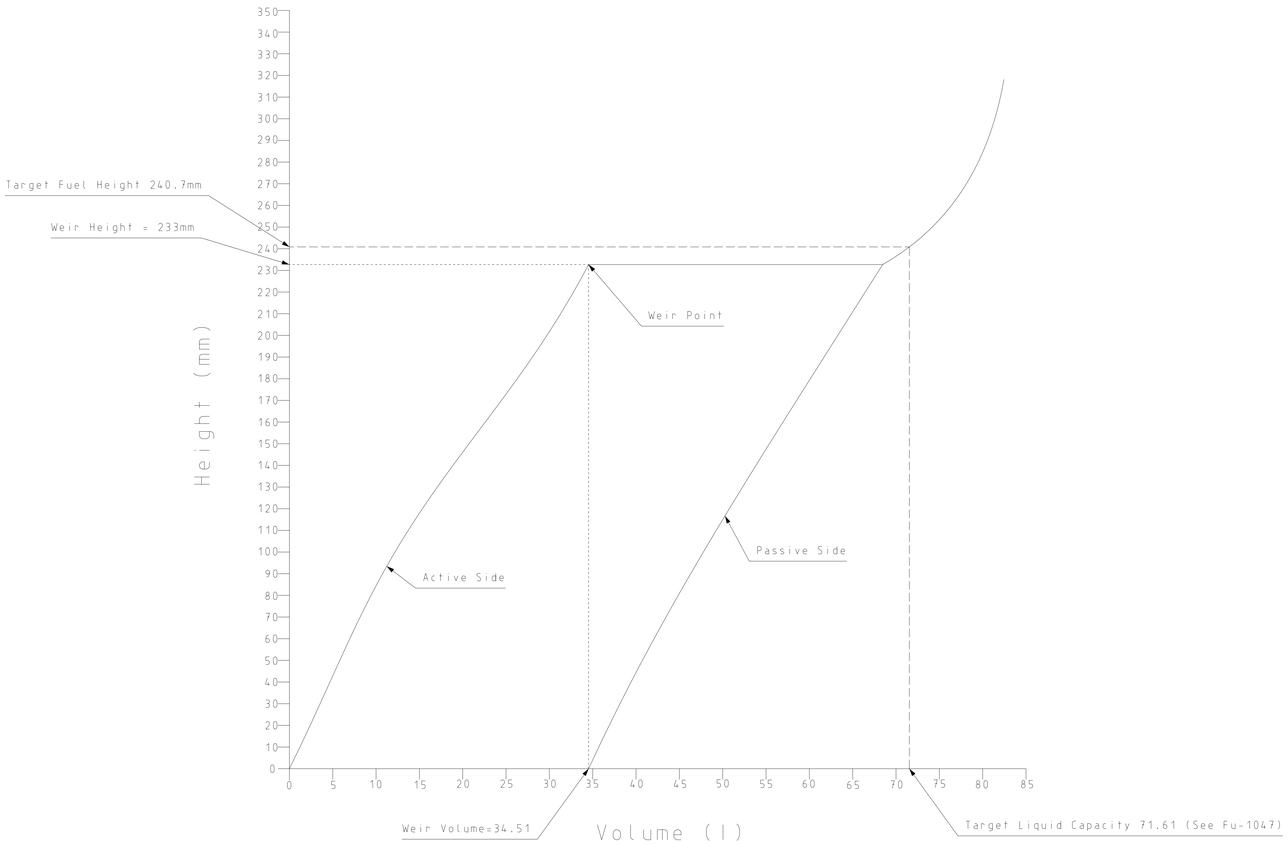

DRAWING	REV	SHT 3
8W83-9K007-AG	1	OF 3
CAD FILE 8W83-9K007-A-DWG-01	JAGUAR CARS LIMITED	LAND ROVER

PRINTED COPIES ARE UNCONTROLLED

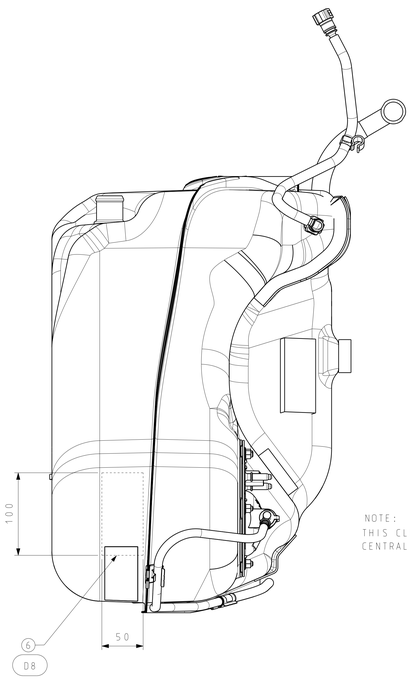

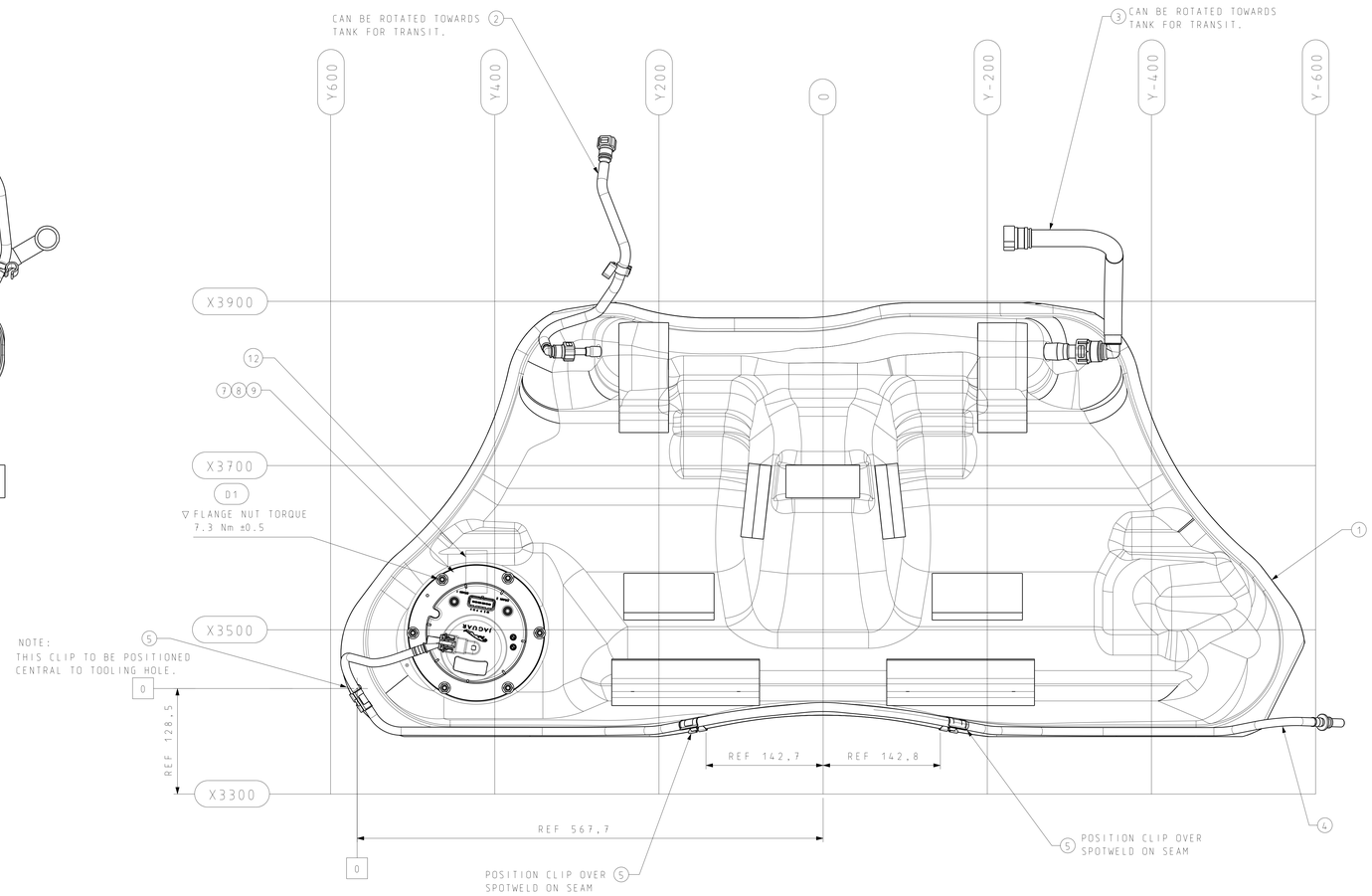

NOTES

REFER TO SHEET 2 OF 2 FOR DETAILED NOTES

	ITEM	QTY	PART NUMBER	PART NAME	REMARKS
H1 F1 C2	1	1	8W83-9002-AD	TANK & SENDER ASY - FUEL	
	2	1	8W83-9A186-AA	PIPE ASY-TNK VPR	
	3	1	6W83-9B050-AD	TUB/FU/TNK VPR OLET	
	4	1	8W83-9323-AA	TUB ASY-FU/TNK TO FU/FLTR	
D12	5	3	8W83-9A317-BA	CLIP - 10MM X 20DEG	TUBE PULL OUT FORCE 25.5N MINIMUM
C5	6	1	8W83-9K007-A_PIA01	IDENT LABEL	SEE DETAILS FOR LABEL REQUIREMENTS
D2	7	1	6W83-9276-AB	GSK-FU/TNK SDR	WHEN TAMPERED WITH MUST BE REPLACED
D3	8	1	6W83-9A307-AB	CLAMP-RING	
D4	9	6	W709952-S	NUT M6 HF PTM SPL SS	ONCE LOOSE MUST BE REPLACED
H2 G1 D5	10	1	8W83-9A309-AF	FLNG FU/TNK SDR & OLET TUB	
H3 E1 D6	11	1	8W83-9H307-AF	SDR & PMP ASY FU/TNK	NOT SHOWN
D7	12	1	8W83-9002-A_PIA03	TAMPER EVIDENT LABEL	IF LABEL IS BROKEN DO NOT FIT TO VEHICLE
E2 H4	13	1	8W83-9A299-AB	LEVEL SNSR ASY	SERVICE USE ONLY - NOT SHOWN - PIA ITEM 11

SC RESISTANCE TABLE

	LHS FDM	RHS JPM
EMPTY	51.2±0 OHMS	51.2±0 OHMS
C1 FULL	992.0±10.5 OHMS	992.0±10.5 OHMS

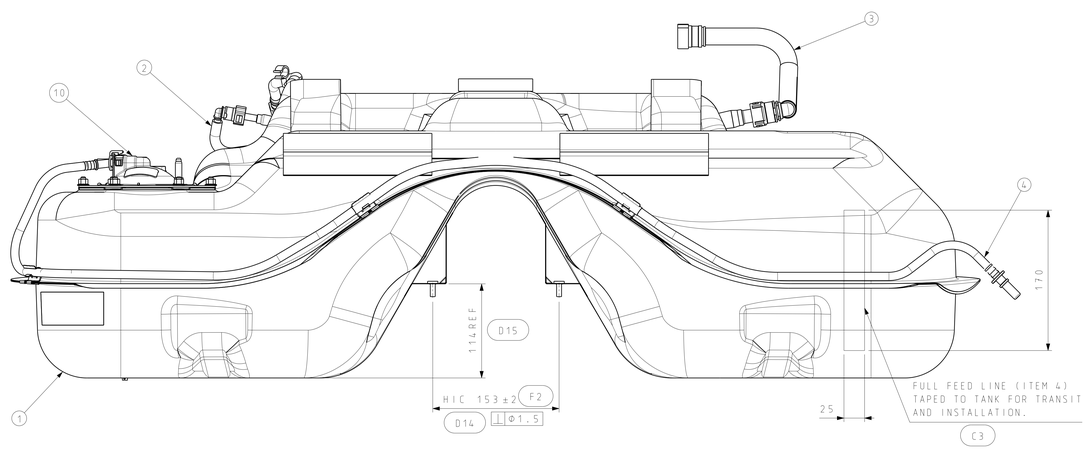

LTRS	REVISIONS		
ORIGINATOR	CHECKER	ENGR APP	MATL APP
RELEASE OF PART 8W83-9K007-AB UEP2 E 11983933 000 20070315			
JTYSON7	SWRIGH65	PGRAY18	MATSENG
RELEASE OF PART 8W83-9K007-AC C1 ±10.5 OHMS WAS ±1.5 OHMS C2 8W83-9002-AB WAS 8W83-9002-AA C3 ITEM 4 WAS ITEM 3 C4 EA STANDARD ADDED C5 LABEL DETAIL ADDED UEP2 E 12005998 000 20070716			
JSEERA1	MHUSSA66	PGRAY18	MATSENG
RELEASE OF PART 8W83-9K007-AD D1 TORQUE NOTE ADDED D2 ITEM 7 ADDED D3 ITEM 8 ADDED D4 ITEM 9 ADDED D5 ITEM 10 ADDED D6 ITEM 11 ADDED D7 ITEM 12 ADDED - TAMPER EVIDENT LABEL POSITION D8 ITEM 6 RE-LOCATED D9 SC REMOVED FROM ID LABEL SHT2 D10 VOLUME VS HEIGHT ADDED TO SHT3 D11 ALL CC/SC's & HIC's IDENTIFIED ON DRAWING D12 PULL OF LOAD INFO ADDED TO ITEM 5 D13 CRT DOCUMENT NOTE ADDED TO SHT2 D14 PERPENDICULARITY WAS 0.5 D15 TEXT HIC REMOVED UEP2 E 12083882 000 20080318			
AGRANT12	MHUSSA66	PGRAY18	MATSENG
E1 ITEM 11 WAS 8W83-9H307-AD E2 ITEM 13 ADDED UEP2 E 12124328 000 20080519			
PNAVANEE	MHUSSA66	PGRAY18	MATSENG
F1 ITEM 1 WAS 8W83-9002-AB F2 HIC TOLERANCE CHANGED FOR HEATSHIELD STUD POSITION UEP2 E 12143772 000 20080701			
PNAVANEE	AWHITEMA	PGRAY18	MATSENG
RELEASE OF 8W83-9K007-AF G1 ITEM 10 WAS 8W83-9A309-AD UEP2 E 12307951 000 20100107			
AGRANT12	AWHITEMA	PGRAY18	MATSENG

LTRS	REVISIONS		
ORIGINATOR	CHECKER	ENGR APP	MATL APP
REDRAWN FROM IDEA-S RELEASE OF 8W83-9K007-AG H1 ITEM 1 WAS 8W83-9002-AC H2 ITEM 10 WAS 8W83-9A309-AE H3 ITEM 11 WAS 8W83-9H307-AE H4 ITEM 13 WAS 8W83-9A310-AA UEP2 E S0022234 000 20111028			
HJAYARAM	PREDHEAD	PWADSWOR	MATSENG

REFERENCE	DS-J-X150-100100-C810-01 & 03		
PART MUST COMPLY WITH RESTRICTED SUBSTANCE MANAGEMENT STANDARD STJLR.99.9999 TO SAFEGUARD HEALTH, SAFETY AND THE ENVIRONMENT			
DRAFTED IN ACCORDANCE WITH JAGUAR LAND ROVER PLM STANDARDS CURRENT AT INITIAL RELEASE		3RD ANGLE PROJ DIMENSIONS ARE IN MILLIMETRES	
CAD TYPE K-CATIA5	CAD LOC. TC	CAD FILE 8W83-9K007-A-DWG-01	REV :1 / DTMC IS MASTER
DESIGN PREDHEAD	DETAIL HJAYARAM	DRAWING 8W83-9K007-AG	SHT 1 OF 3
CHECKED PREDHEAD	SAFETY N/A	TITLE TANK & SENDER ASSY FUEL	
SCALE 1:2	DATE 20111028		SIZE A0
JAGUAR CARS LIMITED			LAND ROVER

DO NOT SCALE FROM DRAWING PRINTED COPIES ARE UNCONTROLLED

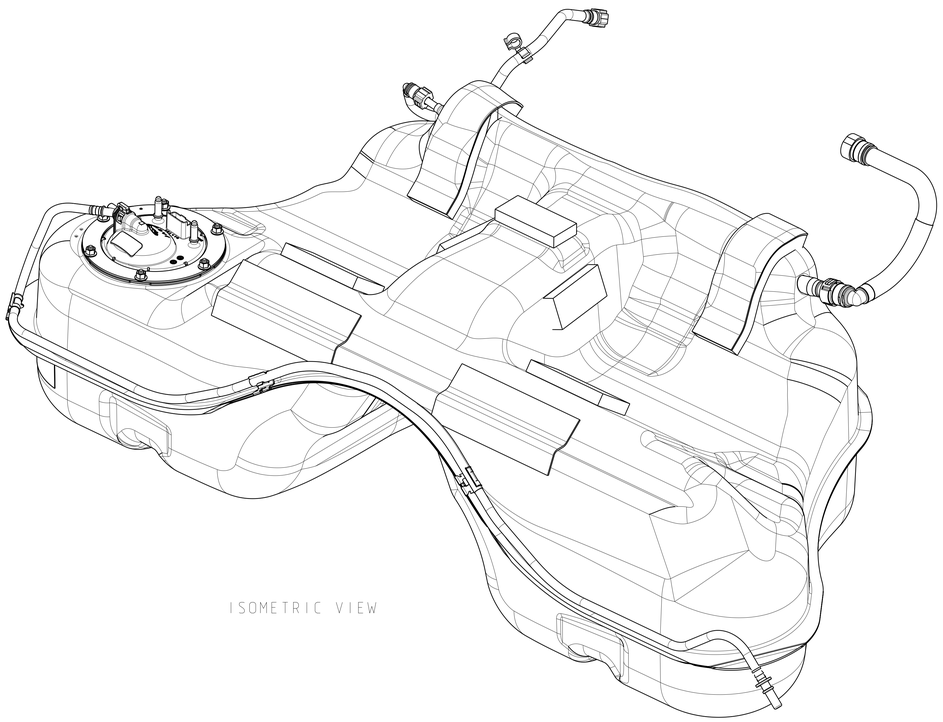

ISOMETRIC VIEW

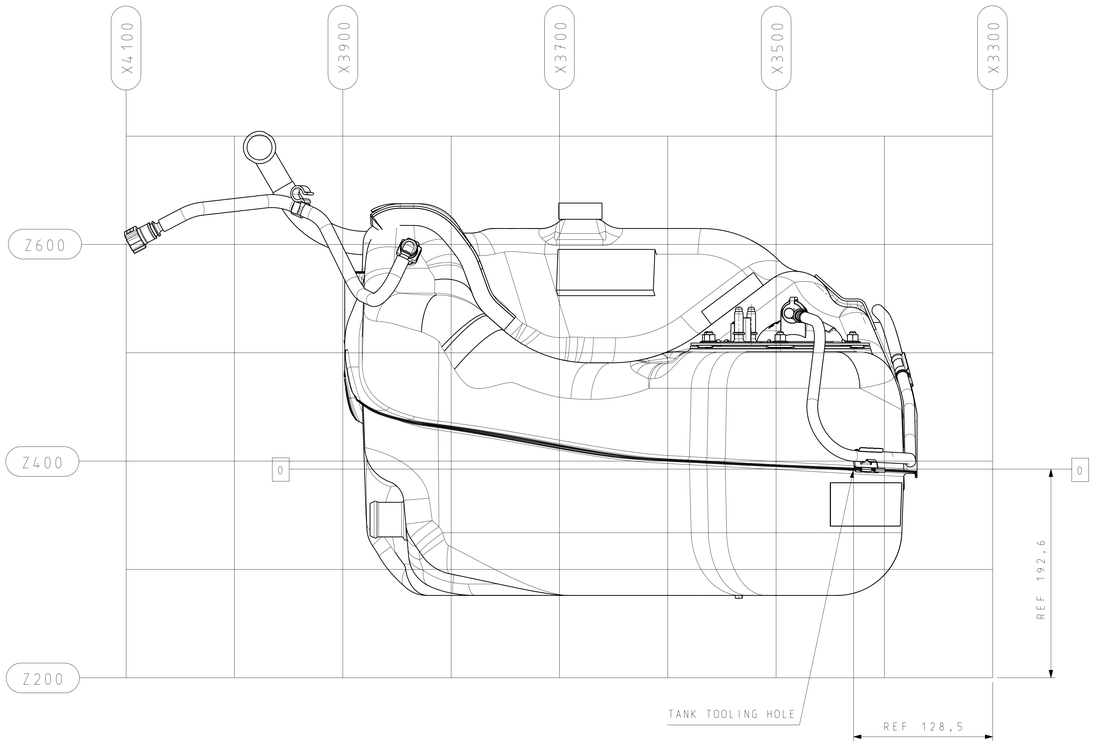

NOTES:

▽ LEAK TEST ACCORDING TO ES-YU5A-9000-AC (TEST III B)

AFTER LEAK TESTING, NO PART TO BE REMOVED OR CHANGED WITHOUT RETESTING.

▽ MUST CONFORM TO ENGINEERING STANDARD ES-3U5A-9002-AA

SC CLEANLINESS TO JPS SPEC C1013 SECTION 27

PART MUST COMPLY WITH MATERIAL CONTROL, BLACK GREY BOX PROGRAM SPEC WSS-M99P23-B

ALL SELF ADHESIVE PADS, LABELS AND TAPE TO PERFORM TO JMS 20.11.01.G2

PART BRANDING TO FORD MOTOR COMPANY STANDARDS E3

C4 THIS ASSEMBLY AND ANY SUB COMPONENTS TO COMPLY WITH FORD CAN AND DRAFTING STANDRAD E4 (IDENTIFICATION OF POLYMER MATERIALS)

LIQUID CAPACITY (AS PER FU-1047) 71.0 LITERS
ADVERTISED CAPACITY (AS PER FU-1050) 70.6 LITRES

NO LUBRICATION TO BE USED DURING MANUFACTURE OF PARTS(S) TO ASSEMBLE COMPONENT PART(S) OR TO ASSEMBLE COMPONENT(S) TO VEHICLE UNLESS AUTHORISED AND APPROVED BY JAGUAR MATERIALS AND FUEL SYSTEM ENGINEERING DEPARTMENTS.

ASSEMBLY MUST BE FREE INTERNALLY FROM WATER, ALL MANUFACTURING PROCESSING FLUIDS AND ANY PRESSURE TEST FLUIDS

ALL ORIFICES, VENT LINES, HOSES ETC TO BE SEALED FOR TRANSPORT AND STORAGE PURPOSES. ASSOCIATED PLUGS, CAPS ETC MUST RETAIN EFFECTIVE DURING PROLONGED PEROIDS OF STORAGE/PALLETIASATION AND MUST PROTECT SEALING SURFACES.

ALL PLUGS, CAPS ETC MUST BE EASILY REMOVABLE WITHOUT TOOLS. IT MUST NOT BE POSSIBLE TO FIT ASSEMBLY TO MATING COMPONENTS WITH CAPS/PLUGS IN PLACE.

ASSEMBLE TO SHOW NO DETRIMENTAL EFFECT DURING STORAGE FOR A MINIMUM OF SIX MONTHS AT ROOM TEMPARATURE.

PART BRANDING/TRACEABILITY LABEL IS ONLY TO BE ISSUED WHEN COMPONENT HAS PASSED PRODUCTION LINE LEAK TESTING.

100% OPERATOR PULL BACK CHECK BY HAND ON ITEMS 2 & 3 CONNECTOR BODIES AFTER ASSEMBLY TO ENSURE JOINTS ARE LATCHED AND SECURE.

ASSEMBLIES TO BE PALLETISED/STILLAGED SUCHTHAT NO INTERNAL OR EXTERNAL DAMAGE OR CONTAMINATION DURING STORAGE.

ASSEMBLY TO BE TRANSPORTED, STORED AND PALLETISED SUCH THAT IT REMAINS FLAT IN THE NORMAL VEHICLE INTENT POSITION SUCH THAT NO DAMAGE CAN OCCUR TO ANY INTERNAL PARTS OR EXTERNAL PARTS/FEATURES OF THE ASSEMBLY.

HIC BLOW OFF CHECK TO ITEM 4 TO BE DONE AT A PRESSURE OF 240KPa
▽ ROLLOVER VACUUM CHECK ELECTRICAL CONNECTIONS TO PUMP REFER TO UEES CONTROL PLAN.

IN FINAL ASSEMBLY FLOAT TRAVEL SHOULD NOT BE RESTRICTED. PERFORM SENDER RESISTANCE CHECK AT EMPTY, FULL AND EMPTY STOPS.

BURRS-SHARP EDGES AND FOREIGN MATERIAL RESULTING FROM GOOD MANUFACTURING PRACTICES ARE ACCEPTABLE PROVIDING THEY ARE NOT DETRIMENTAL TO ASSEMBLY, FUNCTION OR SAFE HANDLING AS DETERMINED BY FORD PRODUCT ENGINEERNG.

HIC FOLLOWING DELIVERY, THE PUMP MUST NOT BE ENERGISED (6 VOLTS <4 AMPS) FOR MORE THAN 2 x 5 SECONDS MAX DURATION IN A DRY CONDITION.

MANUFACTURER TO ESTABLISH PRODUCT ENGINEERING APPROVAL CONTROL PLAN.

D13 FOR COMPREHENSIVE LIST OF CC/SC'S & HIC'S PLEASE REFER TO CRT DOCUMENT.

ENGINEERING APPROVAL OF A MINIMUM OF 6 SAMPLES FROM EACH SUPPLIER IS REQUIRED PRIOR TO FIRST SHIPMENT OF PARTS FOR INITAL RELEASE AND ALL SUBSEQUENT CHANGE REQUESTS.

THE MASTER SOURCE OF INFORMATION FOR THIS DRAWING IS IN A PD COMPUTER DATABASE. CHANGES ARE NOT PERMITTED WITHOUT PRIOR CONSENT OF THE ENGINEERING CAD AREA.

FOR THE PURPOSES OF GEOMETRIC TOLERANCING ALL DIMENSIONAL INFORMATION CONTAINED WITHIN THE CAD MODEL IS BASIC.

▽ CONTROL ITEM - THE ▽ ALSO IDENTIFIES CRITICAL CHARACTERISTICS DESIGNATED BY THE CROSS FUNCTIONAL TEAMS DEVELOPING THE PRODUCT. THESE AND ADDITIONAL CRITICAL CHARACERISTICS IDENTIFIED BY PROCESS REVIEWS, MUST APPEAR ON THE CONTROL PLANS ACCORING TO QS9000 THESE CONTROL PLANS REQUIRE PRODUCT ENGINEERING APPROVAL

MATERIALS DEFINED BY ES/W5-M CALL-OUTS REQUIRE PRIOR ENGINEERING APPROVAL. SEE FORD ENGINEERING STANDARDS ENGINEERING MATERIAL APPROVED SOURCE LIST

CORROSION PROTECTION FOR SERVICE PARTS MUST COMPLY WITH FORD CUSTOMER SERVICE DIVISION (FCSD) PACKAGING AND SHIPPING GUIDE.

CHANGES AFFECTING DESIGN COMPOSITION OR PROCESSING OF THE PART PREVIOUSLY APPROVED FOR PRODUCTION REQUIRE PRIOR APPROVAL FROM FORD PRODUCT ENGINEERING REF QS 9000

FOR THE CURRENT RELEASE STATUS
SEE THE WERS ENGINEERING NOTICE

THIS DRAWING HAS BEEN PREPARED BY OR ON BEHALF OF FORD MOTOR COMPANY. FORD RETAINS ALL COMMON LAW, STATUTORY AND OTHER RESERVED RIGHTS, INCLUDING COPYRIGHTS. THIS DRAWING SHALL NOT BE USED FOR ANY PURPOSE OTHER THAN PERFORMING SERVICES DIRECTLY OR INDIRECTLY TO FORD, WITHOUT THE EXPRESSED WRITTEN PERMISSION OF FORD. UNAUTHORIZED USE, COPYING OR MODIFICATION , INCLUDING THE REMOVAL OF THIS NOTE , MAY CONSTITUTE A VIOLATION OF CIVIL OR CRIMINAL LAWS ENFORCABLE BY FORD OR GOVERNMENTAL AGENCIES.
COPYRIGHT © FORD COMPANY (1996)

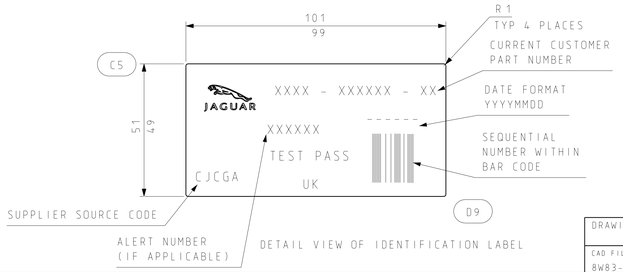

DETAIL VIEW OF IDENTIFICATION LABEL

DRAWING	REV	SHT 2
8W83-9K007-AG	1	OF 3
CAD FILE 8W83-9K007-A-DWG-01	JAGUAR CARS LIMITED / LAND ROVER	

PRINTED COPIES ARE UNCONTROLLED

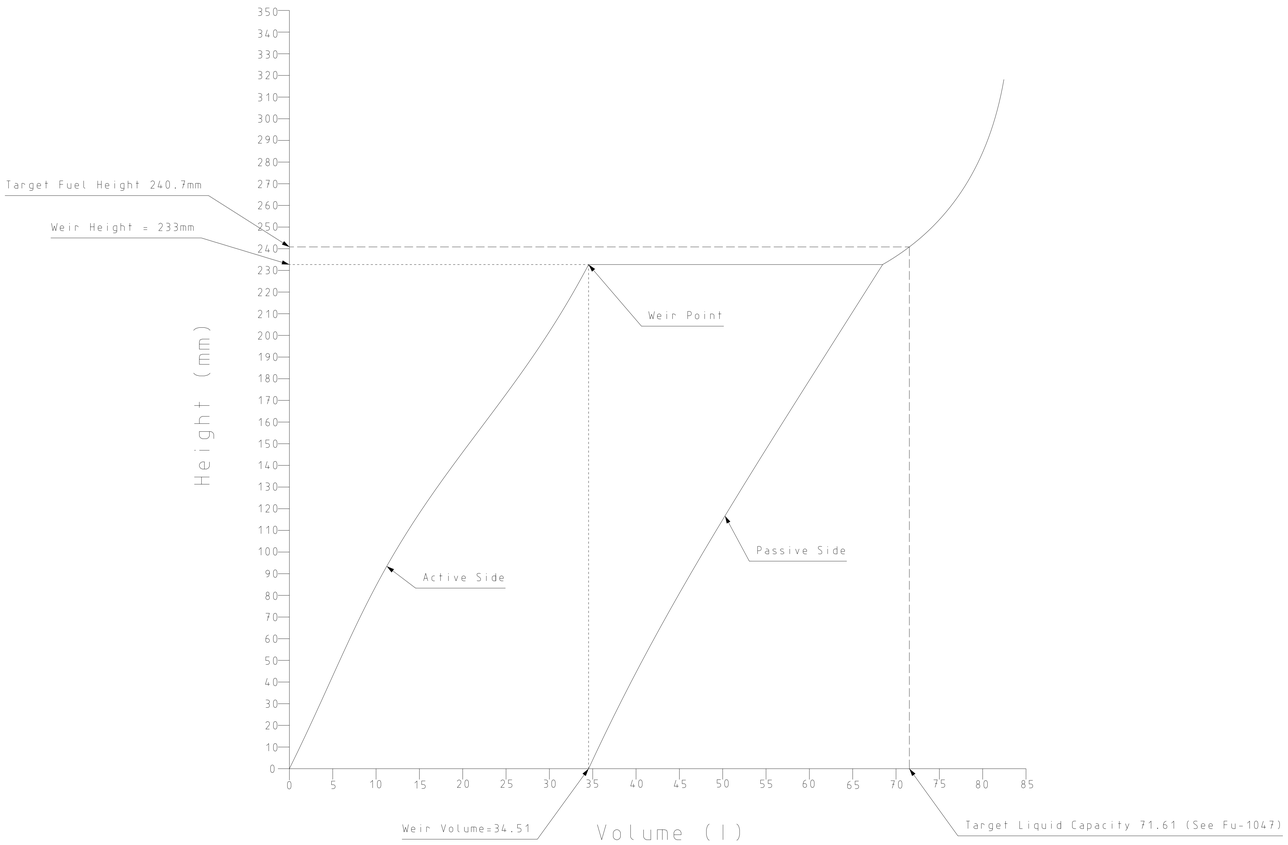

DRAWING	REV	SHT 3
8W83-9K007-AG	1	OF 3
CAD FILE 8W83-9K007-A-DWG-01	JAGUAR CARS LIMITED	LAND ROVER

PRINTED COPIES ARE UNCONTROLLED

NOTES:

C1 * REFER TO SUPPLEMENT K DOCUMENT AND CRT

THIS ASSEMBLY MUST COMPLY WITH THE REQUIREMENTS OF ENGINEERING SPECIFICATION ES 3U5A-9002-BB, EXCEPT FOR THE SECTION 3.6 CONTAMINATION WHERE NOTE BELOW APPLIES.

C2 THIS ASSY MUST COMPLY WITH THE REQUIREMENTS OF ENGINEERING SPECIFICATION FTDVPX250.10

LOCKING RING TO MEET THE REQUIREMENTS OF SAE J2587.

COMPONENT TO BE MARKED IN LINE WITH FORD MOTOR COMPANY ENGINEERING CAD & DRAFTING STANDARD E-3.
COMPONENT TO COMPLY WITH THE IDENTIFICATION OF FORD MOTOR COMPANY ENGINEERING CAD & DRAFTING STANDARD E-4 FOR POLYMERIC MATERIALS.

GROSS CAPACITY - 79.55 LITRES

F5 C3 EMPTY TO DESIGN CUT OFF - 71.1 LITRES

USABLE CAPACITY - 69.5 LITRES

WEIGHT OF FUEL TANK ASSEMBLY - 12.550Kg ± 0.5Kg

* TOTAL INTERNAL DEBRIS MUST NOT EXCEED 4.0mg WHEN TESTED TO LRLTM 30.IC101 OR SIMILAR APPROVED METHOD.
THE MAXIMUM PERMISSIBLE PARTICLE SIZE MUST NOT EXCEED 400 microns/0.6mg WHEN MEASURED IN ACCORDANCE WITH LRLTM 30.DD.103.

FOR CURRENT RELEASE STATUS SEE WERS ENGINEERING NOTICE.

THIS ASSEMBLY IS TO CONFORM TO THE GPDS REQUIREMENTS OF THE RELEVANT FORD AND JAGUAR / LAND ROVER SPECIFICATIONS CONTAINED IN THE DESIGN VERIFICATION PLAN LATEST ISSUE.

AS SUPPLIER TO JAGUAR / LAND ROVER COMPONENT MUST BE FREE INTERNALLY FROM THE FOLLOWING:-
- ALL MANUFACTURING AND PROCESS TEST FLUIDS.
- ALL IN PROCESS PRESSURE TEST FLUIDS.
- ALL MANUFACTURING DEBRIS, SWARF OR WELD SPATTER.
-WATER, DIRT OR DUST INGRESS.

FULL TRACEABILITY TO BE INDELIBLY MARKED / LABELLED ON THIS ASSEMBLY WITH REGARD TO YEAR, MONTH, DAY, TIME, ASSEMBLY LINE TEST DATA AND CRITICAL SECOND TIER SUPPLIER COMPONENTS ie FUEL DELIVERY MODULE AND SENDER(S).

THIS ASSEMBLY IS TO MEET THE LEGISLATIVE REQUIREMENTS OF ECE34, ECE34 ANNEX 5 AND EEC DIRECTIVE 70/221, CHINA FUEL TANKS.

▽ 100% LEAK TEST: PRESSURE DIFFERENTIAL TEST USING 100% HELIUM. LEAK RATE TO BE LESS THAN 1.4 x 10^{-5} l/s AT 140 mbar DIFFERENTIAL PRESSURE.
AFTER LEAK TESTING NO PART TO BE REMOVED OR CHANGED WITHOUT RETESTING.

▽ 100% FUEL PUMP MODULE AND SENDER UNIT AND TANK VALVE FUNCTIONALITY TESTS TO BE CARRIED OUT IN LINE WITH PROCESS CONTROL DOCUMENTS AGREED WITH JAGUAR/LANDROVER PRODUCT ENGINEERING AND STA DEPARTMENTS.

▽ PUMP START TEST - MEDIUM AIR, VOLTAGE 6+/-0.1V.
MEASURING TIME 1<t<5 SECS.
CURRENT <4A. MAX 2 TESTS.

▽ ACTIVE SENDER UNIT ROLL OVER TEST TO CONFORM -
C10 SENDER FLOAT POSITION EMPTY RESISTANCE VALUE WITHIN TOLERANCE 51.2±1
SENDER FLOAT POSITION FULL RESISTANCE VALUE WITHIN TOLERANCE 992±10.5
SENDER FLOAT BACK TO EMPTY RESISTANCE VALVE WITHIN TOLERANCE 51.2±1

▽ PASSIVE SENDER UNIT ROLL OVER TEST TO CONFORM -
SENDER FLOAT POSITION EMPTY RESISTANCE VALUE WITHIN TOLERANCE: 51.2±1Ω
E2 SENDER FLOAT POSITION FULL RESISTANCE VALUE WITHIN TOLERANCE: 445±25Ω
SENDER FLOAT POSITION BACK TO EMPTY RESISTANCE VALUE WITHIN TOLERANCE: 51.2±1Ω

C4 FOR ELECTRICAL CONNECTOR PIN OUT INFORMATION REFER TO DRAWING 9X23-9A309-A LATEST ISSUE.

FUEL TANK GASKET TO BE CLEAN AND FREE FROM ANY SURFACE IMPERFECTION THAT MAY BE DETRIMENTAL TO ITS SEALING INTEGRITY.

REFER TO FUEL TANK ASSY STOWAGE POSITION DOCUMENT FOR DELIVERED CONDITION TO CASTLE BROMWICH ASSY PLANT.

▽ 100% TANK VENT SYSTEM - VACUUM TEST
ROLL TANK OVER 180° FROM NORMAL VEHICLE FITTED POSITION.
APPLY A VACUUM OF AT LEAST - 150mb.
APPLY THE VACUUM AT THE BREATHER STUB CONNECTION.
EVACUATION TIME 5 SECS MINIMUM.
STABILISATION TIME 10 SECS MINIMUM.
LEAK CHECK FOR 20 SECS MINIMUM.
LEAK RATE TO BE <50ccm.
RELEASE VACUUM, ROLL BACK TO NORMAL VEHICLE FITTED POSITION.

C5 ALL INTERNAL & EXTERNAL CONNECTIONS TO BE 100% VERIFIED.

▽ TORQUE FIGURES TO BE 100% MONITORED AND RECORDED ON AN AUDIT SYSTEM - ITEM 4 TIGHTEN CAM LOCK TO CLOSURE STOP. TORQUE TO ACHIEVE THIS 250Nm ±20Nm ANGULAR ROTATION START AND FINISH TO BE MONITORED DURING ASSEMBLY. ANGULAR ROTATION 17.3°.

ALL FUEL LINES AND TANK OPENINGS AS DESIGNATED TO BE CAPPED DURING ASSEMBLY, TRANSPORT AND STORAGE. CAP(S) MUST PROTECT ANY SEALING SURFACE AND MUST REMAIN EFFECTIVE FOR PROLONGED STORAGE. CAP(S) MUST EASILY BE REMOVED WITHOUT THE USE OF TOOLS. IT MUST NOT BE POSSIBLE TO FIT ASSEMBLY TO MATING COMPONENTS WITH CAP(S) STILL IN PLACE.

* NO LUBRICANT TO BE USED DURING THE MANUFACTURE OF PARTS OR ASSEMBLY OF PARTS UNLESS AUTHORISED BY JLR MATERIALS AND FUEL SYSTEM ENGINEERING DEPARTMENTS.

COMPONENT TO BE STOWED, PALLETISED, TRANSPORTED AND STORED SUCH THAT NO DISTORTION OF FORM, INTERNAL OR EXTERNAL DAMAGE OR DIRT INGRESS CAN OCCUR TO THE ASSEMBLY.

ASSEMBLY TO BE FREE FROM FLASH, BURRS, SHARP EDGES AND ANY OTHER IMPERFECTIONS THAT MAY CAUSE INJURY DURING HANDLING OR THAT WOULD BE DETRIMENTAL TO ITS ASSEMBLY OR PERFORMANCE.

CHANGES AFFECTING DESIGN, COMPOSITION OR PROCESSING TO THE ASSEMBLY OR SUB COMPONENTS PREVIOUSLY APPROVED FOR PRODUCTION REQUIRE PRIOR APPROVAL FROM JLR PRODUCT ENGINEERING. REFER TO QS9000.

ENGINEERING APPROVAL OF A MINIMUM OF SIX SAMPLES FROM EACH SUPPLIER IS REQUIRED PRIOR TO FIRST SHIPMENT OF PARTS FOR INITIAL RELEASE AND FOR SUBSEQUENT CHANGE REQUESTS.

UNLESS OTHERWISE SPECIFIED ALL LINES AND SURFACES, SAME SIDE OF MATERIAL AS DATUM.

ALL SEALING SURFACES TO BE CLEAN AND FREE FROM ANY SURFACE IMPERFECTIONS (INCLUDING) HOLES, SPOTS, DENTS, FLASH AND OFFSET MOULDING LINES.

AFTER ASSEMBLY ALL HOSES, PIPES TO BE FREE FROM KINKS.

DO NOT USE HOSES / PIPES ATTACHED TO THIS ASSEMBLY TO REMOVE FROM STILLAGE OR CARRY COMPONENT.

ALL PROTECTIVE CAPS TO BE REMOVED, AND LINES AND ELECTRICAL CONNECTOR TO BE UNSTOWED PRIOR TO ASSEMBLY OF COMPONENT TO VEHICLE.

TEST CERTIFICATION LABEL / FINISHED GOODS LABEL -
- DATE OF FINAL ASSEMBLY
C9 - TIME OF FINAL ASSEMBLY
- SEQUENTIAL ID NUMBER. (WHICH CORRELATES AGAINST CAQ DATA)
- PRODUCT DESCRIPTION & VARIENT INFORMATION
- PART NUMBER

IT IS THE RESPONSIBILITY OF THE COMPONENT / ASSEMBLY MANUFACTURER TO ENSURE THAT THE COMPONENT / ASSEMBLY MEETS THE REQUIREMENTS OF THE CHINESE PARTS MARKING - CCC

F4 IT IS ALSO THE RESPONSIBILITY OF THE COMPONENT / ASSEMBLY MANUFACTURER TO ENSURE THAT COPIES OF APPROVAL CERTIFICATES FOR BOTH THE ASSEMBLY PLANT AND THE COMPONENT / ASSEMBLY MUST BE FORWARDED TO THE RELEVANT JLR REPRESENTATIVE UPON ISSUE FROM THE CHINESE AUTHORITIES

C6 SERVICE NOTE:
IF ITEM 8 FLNG FU/TNK SDR & OLET TUB MTNG (FLANGE) IS REMOVED OR DISTURBED IN SERVICE A NEW GSKT FU/TNK SDR ITEM 3 MUST BE USED. REFER TO SHEET 3 FOR CORRECT ORIENTATION REPLACEMENT OF ITEM 4 RG - FU/TNK.

▽ CONTROL ITEM - THE ▽ ALSO IDENTIFIES CRITICAL CHARACTERISTICS DESIGNATED BY THE CROSS FUNCTIONAL TEAMS DEVELOPING THE PRODUCT. THESE AND ADDITIONAL CRITICAL CHARACTERISTICS IDENTIFIED BY PROCESS REVIEWS MUST APPEAR ON THE CONTROL PLANS ACCORDING TO QS-9000. THESE CONTROL PLANS REQUIRE PRODUCT ENGINEERING APPROVAL.

FEDERAL FUEL TANK TOP LEVEL ASSEMBLY

LTRS	REVISIONS		
ORIGINATOR	CHECKER	ENGR APP	MATL APP
RELEASE OF 9X23-9K007-AA UEP2 I 11987659 000 20070406			
NMANDER	AWHITEMA	PGRAY18	MATS ENG
RELEASE OF 9X23-9K007-AC SUFFIX AB USED FOR 'T' RELEASE ONLY. NO DRAWING RELEASED C1. SUPPLEMENT K WAS CUSTOMER CRT C2. DVP SPECIFICATION NOTE ADDED C3. WEIGHTS & CAPACITIES UPDATED C4. TANK STOWAGE NOTE ADDED C5. CONNECTIONS NOTE MODIFIED C6. SERVICE NOTE UPDATED C7. PARTS TABLE UPDATED C8. INTERNAL CONNECTION TABLE UPDATED C9. LABEL DETAILS ADDED C10. RESISTANCE VALUES ADDED UEP2 E 12048779 001 20080130			
NMANDER	AWHITEMA	PGRAY18	MATS ENG
RELEASE OF 9X23-9K007-AD D1 ITEM 1 WAS 9X23-9002-AC UEP2 E 12084434 000 20080213			
NMANDER	AWHITEMA	PGRAY18	MATS ENG
RELEASE OF 9X23-9K007-AE E1 PART NUMBER UPDATES E2 SENDER READING UPDATE E3 SC'S & CC'S ADDED UEP2 E 12132335 001 20080620			
NMANDER	AWHITEMA	PGRAY18	MATS ENG
RELEASE OF 9X23-9K007-AF F1 FDM NUMBER UPDATE F2 FUEL TANK FLANGE NUMBER UPDATE F3 UPDATE TO 9X23-9002-AE UEP2 E 12153716 001 20080905			
NMANDER	AWHITEMA	PGRAY18	MATS ENG
CAD REVISION OF 9X23-9K007-AF F4 ADDITION OF CCC NOTES F5 NOTE UPDATES UEP2 E 12181432 000 20081104			
NMANDER	AWHITEMA	PGRAY18	MATS ENG
CAD RELEASE OF 9X23-9K007-AG G1 TNK ASY FUL PART NO CHANGE UEP2 E 12201658 000 20090121			
NMANDER	AWHITEMA	PGRAY18	MATS ENG
RELEASE OF 9X23-9K007-AH H1 ITEM 1 WAS 9X23-9002-AF H2 ITEM 5 9X23-14407-AB H3 ITEM 8 WAS 9X23-9A309-AC UEP2 E 12240282 000 20090602			
NMANDER	AWHITEMA	PGRAY18	MATS ENG
RELEASE OF 9X23-9K007-AJ J1 ITEM 1 WAS 9X23-9002-AG UEP2 E 50004808 000 20101001			
KSENTHI7	CMITCH11	KWILKIN6	MATS ENG

REFERENCE	DS-J_X250-100100-C810_18-10		
PART MUST COMPLY WITH RESTRICTED SUBSTANCE MANAGEMENT STANDARD WSS-M99P9999-A1 TO SAFEGUARD HEALTH, SAFETY AND THE ENVIRONMENT			
DRAFTED IN ACCORDANCE WITH FORD MOTOR COMPANY ENGINEERING CAD AND DRAFTING STANDARDS VERSION 17.0		3RD ANGLE PROJ DIMENSIONS ARE IN MILLIMETERS	
CAD TYPE K-CATIA5	CAD LOC. TCE	CAD FILE FDR9X239K007A20 ;12	DTMC IS MASTER
OPER. NO. GBIELBY	UNIT N/A	DRAWING 9X23-9K007-AJ	
DESIGN GBIELBY	DETAIL GBIELBY	TITLE TNK & SDR ASY FUL	SHT 1 OF 3
CHECKED AWHITEMA	SAFETY N/A		
SCALE 1:1	DATE 20070221	DIVISION JAGUAR PLANT GAYDON	

PRINTED COPIES ARE UNCONTROLLED

NOTES:

C1 * REFER TO SUPPLEMENT K DOCUMENT AND CRT

THIS ASSEMBLY MUST COMPLY WITH THE REQUIREMENTS OF ENGINEERING SPECIFICATION ES 3U5A-9002-BB, EXCEPT FOR THE SECTION 3.6 CONTAMINATION WHERE NOTE BELOW APPLIES.

C2 THIS ASSY MUST COMPLY WITH THE REQUIREMENTS OF ENGINEERING SPECIFICATION FTDVPX250.10

LOCKING RING TO MEET THE REQUIREMENTS OF SAE J2587.

COMPONENT TO BE MARKED IN LINE WITH FORD MOTOR COMPANY ENGINEERING CAD & DRAFTING STANDARD E-3.
COMPONENT TO COMPLY WITH THE IDENTIFICATION OF FORD MOTOR COMPANY ENGINEERING CAD & DRAFTING STANDARD E-4 FOR POLYMERIC MATERIALS.

GROSS CAPACITY - 79.55 LITRES

F5 C3 EMPTY TO DESIGN CUT OFF - 71.1 LITRES

USABLE CAPACITY - 69.5 LITRES

WEIGHT OF FUEL TANK ASSEMBLY - 12.550Kg ± 0.5Kg

* TOTAL INTERNAL DEBRIS MUST NOT EXCEED 4.0mg WHEN TESTED TO LRLTM 30.IC101 OR SIMILAR APPROVED METHOD.
THE MAXIMUM PERMISSIBLE PARTICLE SIZE MUST NOT EXCEED 400 microns/0.6mg WHEN MEASURED IN ACCORDANCE WITH LRLTM 30.DD.103.

FOR CURRENT RELEASE STATUS SEE WERS ENGINEERING NOTICE.

THIS ASSEMBLY IS TO CONFORM TO THE GPDS REQUIREMENTS OF THE RELEVANT FORD AND JAGUAR / LAND ROVER SPECIFICATIONS CONTAINED IN THE DESIGN VERIFICATION PLAN LATEST ISSUE.

AS SUPPLIER TO JAGUAR / LAND ROVER COMPONENT MUST BE FREE INTERNALLY FROM THE FOLLOWING:-
- ALL MANUFACTURING AND PROCESS TEST FLUIDS.
- ALL IN PROCESS PRESSURE TEST FLUIDS.
- ALL MANUFACTURING DEBRIS, SWARF OR WELD SPATTER.
-WATER, DIRT OR DUST INGRESS.

FULL TRACEABILITY TO BE INDELIBLY MARKED / LABELLED ON THIS ASSEMBLY WITH REGARD TO YEAR, MONTH, DAY, TIME, ASSEMBLY LINE TEST DATA AND CRITICAL SECOND TIER SUPPLIER COMPONENTS ie FUEL DELIVERY MODULE AND SENDER(S).

THIS ASSEMBLY IS TO MEET THE LEGISLATIVE REQUIREMENTS OF ECE34, ECE34 ANNEX 5 AND EEC DIRECTIVE 70/221, CHINA FUEL TANKS.

▽ 100% LEAK TEST: PRESSURE DIFFERENTIAL TEST USING 100% HELIUM. LEAK RATE TO BE LESS THAN 1.4 x 10^{-5} l/s AT 140 mbar DIFFERENTIAL PRESSURE.
AFTER LEAK TESTING NO PART TO BE REMOVED OR CHANGED WITHOUT RETESTING.

▽ 100% FUEL PUMP MODULE AND SENDER UNIT AND TANK VALVE FUNCTIONALITY TESTS TO BE CARRIED OUT IN LINE WITH PROCESS CONTROL DOCUMENTS AGREED WITH JAGUAR/LANDROVER PRODUCT ENGINEERING AND STA DEPARTMENTS.

▽ PUMP START TEST - MEDIUM AIR, VOLTAGE 6+/-0.1V.
MEASURING TIME 1<t<5 SECS.
CURRENT <4A. MAX 2 TESTS.

▽ ACTIVE SENDER UNIT ROLL OVER TEST TO CONFORM -
C10 SENDER FLOAT POSITION EMPTY RESISTANCE VALUE WITHIN TOLERANCE 51.2±1
SENDER FLOAT POSITION FULL RESISTANCE VALUE WITHIN TOLERANCE 992±10.5
SENDER FLOAT BACK TO EMPTY RESISTANCE VALVE WITHIN TOLERANCE 51.2±1

▽ PASSIVE SENDER UNIT ROLL OVER TEST TO CONFORM -
SENDER FLOAT POSITION EMPTY RESISTANCE VALUE WITHIN TOLERANCE: 51.2±1Ω
E2 SENDER FLOAT POSITION FULL RESISTANCE VALUE WITHIN TOLERANCE: 445±25Ω
SENDER FLOAT POSITION BACK TO EMPTY RESISTANCE VALUE WITHIN TOLERANCE: 51.2±1Ω

C4 FOR ELECTRICAL CONNECTOR PIN OUT INFORMATION REFER TO DRAWING 9X23-9A309-A LATEST ISSUE.

FUEL TANK GASKET TO BE CLEAN AND FREE FROM ANY SURFACE IMPERFECTION THAT MAY BE DETRIMENTAL TO ITS SEALING INTEGRITY.

REFER TO FUEL TANK ASSY STOWAGE POSITION DOCUMENT FOR DELIVERED CONDITION TO CASTLE BROMWICH ASSY PLANT.

▽ 100% TANK VENT SYSTEM - VACUUM TEST
ROLL TANK OVER 180° FROM NORMAL VEHICLE FITTED POSITION.
APPLY A VACUUM OF AT LEAST - 150mb.
APPLY THE VACUUM AT THE BREATHER STUB CONNECTION.
EVACUATION TIME 5 SECS MINIMUM.
STABILISATION TIME 10 SECS MINIMUM.
LEAK CHECK FOR 20 SECS MINIMUM.
LEAK RATE TO BE <50ccm.
RELEASE VACUUM, ROLL BACK TO NORMAL VEHICLE FITTED POSITION.

C5 ALL INTERNAL & EXTERNAL CONNECTIONS TO BE 100% VERIFIED.

▽ TORQUE FIGURES TO BE 100% MONITORED AND RECORDED ON AN AUDIT SYSTEM - ITEM 4 TIGHTEN CAM LOCK TO CLOSURE STOP. TORQUE TO ACHIEVE THIS 250Nm ±20Nm ANGULAR ROTATION START AND FINISH TO BE MONITORED DURING ASSEMBLY. ANGULAR ROTATION 17.3°.

ALL FUEL LINES AND TANK OPENINGS AS DESIGNATED TO BE CAPPED DURING ASSEMBLY, TRANSPORT AND STORAGE. CAP(S) MUST PROTECT ANY SEALING SURFACE AND MUST REMAIN EFFECTIVE FOR PROLONGED STORAGE. CAP(S) MUST EASILY BE REMOVED WITHOUT THE USE OF TOOLS. IT MUST NOT BE POSSIBLE TO FIT ASSEMBLY TO MATING COMPONENTS WITH CAP(S) STILL IN PLACE.

* NO LUBRICANT TO BE USED DURING THE MANUFACTURE OF PARTS OR ASSEMBLY OF PARTS UNLESS AUTHORISED BY JLR MATERIALS AND FUEL SYSTEM ENGINEERING DEPARTMENTS.

COMPONENT TO BE STOWED, PALLETISED, TRANSPORTED AND STORED SUCH THAT NO DISTORTION OF FORM, INTERNAL OR EXTERNAL DAMAGE OR DIRT INGRESS CAN OCCUR TO THE ASSEMBLY.

ASSEMBLY TO BE FREE FROM FLASH, BURRS, SHARP EDGES AND ANY OTHER IMPERFECTIONS THAT MAY CAUSE INJURY DURING HANDLING OR THAT WOULD BE DETRIMENTAL TO ITS ASSEMBLY OR PERFORMANCE.

CHANGES AFFECTING DESIGN, COMPOSITION OR PROCESSING TO THE ASSEMBLY OR SUB COMPONENTS PREVIOUSLY APPROVED FOR PRODUCTION REQUIRE PRIOR APPROVAL FROM JLR PRODUCT ENGINEERING. REFER TO QS9000.

ENGINEERING APPROVAL OF A MINIMUM OF SIX SAMPLES FROM EACH SUPPLIER IS REQUIRED PRIOR TO FIRST SHIPMENT OF PARTS FOR INITIAL RELEASE AND FOR SUBSEQUENT CHANGE REQUESTS.

UNLESS OTHERWISE SPECIFIED ALL LINES AND SURFACES, SAME SIDE OF MATERIAL AS DATUM.

ALL SEALING SURFACES TO BE CLEAN AND FREE FROM ANY SURFACE IMPERFECTIONS (INCLUDING) HOLES, SPOTS, DENTS, FLASH AND OFFSET MOULDING LINES.

AFTER ASSEMBLY ALL HOSES, PIPES TO BE FREE FROM KINKS.

DO NOT USE HOSES / PIPES ATTACHED TO THIS ASSEMBLY TO REMOVE FROM STILLAGE OR CARRY COMPONENT.

ALL PROTECTIVE CAPS TO BE REMOVED, AND LINES AND ELECTRICAL CONNECTOR TO BE UNSTOWED PRIOR TO ASSEMBLY OF COMPONENT TO VEHICLE.

TEST CERTIFICATION LABEL / FINISHED GOODS LABEL -
- DATE OF FINAL ASSEMBLY
C9 - TIME OF FINAL ASSEMBLY
- SEQUENTIAL ID NUMBER. (WHICH CORRELATES AGAINST CAQ DATA)
- PRODUCT DESCRIPTION & VARIENT INFORMATION
- PART NUMBER

IT IS THE RESPONSIBILITY OF THE COMPONENT / ASSEMBLY MANUFACTURER TO ENSURE THAT THE COMPONENT / ASSEMBLY MEETS THE REQUIREMENTS OF THE CHINESE PARTS MARKING - CCC

F4 IT IS ALSO THE RESPONSIBILITY OF THE COMPONENT / ASSEMBLY MANUFACTURER TO ENSURE THAT COPIES OF APPROVAL CERTIFICATES FOR BOTH THE ASSEMBLY PLANT AND THE COMPONENT / ASSEMBLY MUST BE FORWARDED TO THE RELEVANT JLR REPRESENTATIVE UPON ISSUE FROM THE CHINESE AUTHORITIES

C6 SERVICE NOTE:
IF ITEM 8 FLNG FU/TNK SDR & OLET TUB MTNG (FLANGE) IS REMOVED OR DISTURBED IN SERVICE A NEW GSKT FU/TNK SDR ITEM 3 MUST BE USED. REFER TO SHEET 3 FOR CORRECT ORIENTATION REPLACEMENT OF ITEM 4 RG - FU/TNK.

▽ CONTROL ITEM - THE ▽ ALSO IDENTIFIES CRITICAL CHARACTERISTICS DESIGNATED BY THE CROSS FUNCTIONAL TEAMS DEVELOPING THE PRODUCT. THESE AND ADDITIONAL CRITICAL CHARACTERISTICS IDENTIFIED BY PROCESS REVIEWS MUST APPEAR ON THE CONTROL PLANS ACCORDING TO QS-9000. THESE CONTROL PLANS REQUIRE PRODUCT ENGINEERING APPROVAL.

FEDERAL FUEL TANK TOP LEVEL ASSEMBLY

LTRS	REVISIONS		
ORIGINATOR	CHECKER	ENGR APP	MATL APP
RELEASE OF 9X23-9K007-AA UEP2 I 11987659 000 20070406			
NMANDER	AWHITEMA	PGRAY18	MATS ENG
RELEASE OF 9X23-9K007-AC SUFFIX AB USED FOR 'T' RELEASE ONLY. NO DRAWING RELEASED C1. SUPPLEMENT K WAS CUSTOMER CRT C2. DVP SPECIFICATION NOTE ADDED C3. WEIGHTS & CAPACITIES UPDATED C4. TANK STOWAGE NOTE ADDED C5. CONNECTIONS NOTE MODIFIED C6. SERVICE NOTE UPDATED C7. PARTS TABLE UPDATED C8. INTERNAL CONNECTION TABLE UPDATED C9. LABEL DETAILS ADDED C10. RESISTANCE VALUES ADDED UEP2 E 12048779 001 20080130			
NMANDER	AWHITEMA	PGRAY18	MATS ENG
RELEASE OF 9X23-9K007-AD D1 ITEM 1 WAS 9X23-9002-AC UEP2 E 12084434 000 20080213			
NMANDER	AWHITEMA	PGRAY18	MATS ENG
RELEASE OF 9X23-9K007-AE E1 PART NUMBER UPDATES E2 SENDER READING UPDATE E3 SC'S & CC'S ADDED UEP2 E 12132335 001 20080620			
NMANDER	AWHITEMA	PGRAY18	MATS ENG
RELEASE OF 9X23-9K007-AF F1 FDM NUMBER UPDATE F2 FUEL TANK FLANGE NUMBER UPDATE F3 UPDATE TO 9X23-9002-AE UEP2 E 12153716 001 20080905			
NMANDER	AWHITEMA	PGRAY18	MATS ENG
CAD REVISION OF 9X23-9K007-AF F4 ADDITION OF CCC NOTES F5 NOTE UPDATES UEP2 E 12181432 000 20081104			
NMANDER	AWHITEMA	PGRAY18	MATS ENG
CAD RELEASE OF 9X23-9K007-AG G1 TNK ASY FUL PART NO CHANGE UEP2 E 12201658 000 20090121			
NMANDER	AWHITEMA	PGRAY18	MATS ENG
RELEASE OF 9X23-9K007-AH H1 ITEM 1 WAS 9X23-9002-AF H2 ITEM 5 9X23-14407-AB H3 ITEM 8 WAS 9X23-9A309-AC UEP2 E 12240282 000 20090602			
NMANDER	AWHITEMA	PGRAY18	MATS ENG
RELEASE OF 9X23-9K007-AJ J1 ITEM 1 WAS 9X23-9002-AG UEP2 E 50004808 000 20101001			
KSENTHI7	CMITCH11	KWILKIN6	MATS ENG

REFERENCE	DS-J_X250-100100-C810_18-10		
PART MUST COMPLY WITH RESTRICTED SUBSTANCE MANAGEMENT STANDARD WSS-M99P9999-A1 TO SAFEGUARD HEALTH, SAFETY AND THE ENVIRONMENT			
DRAFTED IN ACCORDANCE WITH FORD MOTOR COMPANY ENGINEERING CAD AND DRAFTING STANDARDS VERSION 17.0		3RD ANGLE PROJ DIMENSIONS ARE IN MILLIMETERS	
CAD TYPE K-CATIA5	CAD LOC. TCE	CAD FILE FDR9X239K007A20 ;12	DTMC IS MASTER
OPER. NO. GBIELBY	UNIT N/A	DRAWING 9X23-9K007-AJ	
DESIGN GBIELBY	DETAIL GBIELBY	TITLE TNK & SDR ASY FUL	SHT 1 OF 3
CHECKED AWHITEMA	SAFETY N/A		
SCALE 1:1	DATE 20070221	DIVISION JAGUAR PLANT GAYDON	

PRINTED COPIES ARE UNCONTROLLED

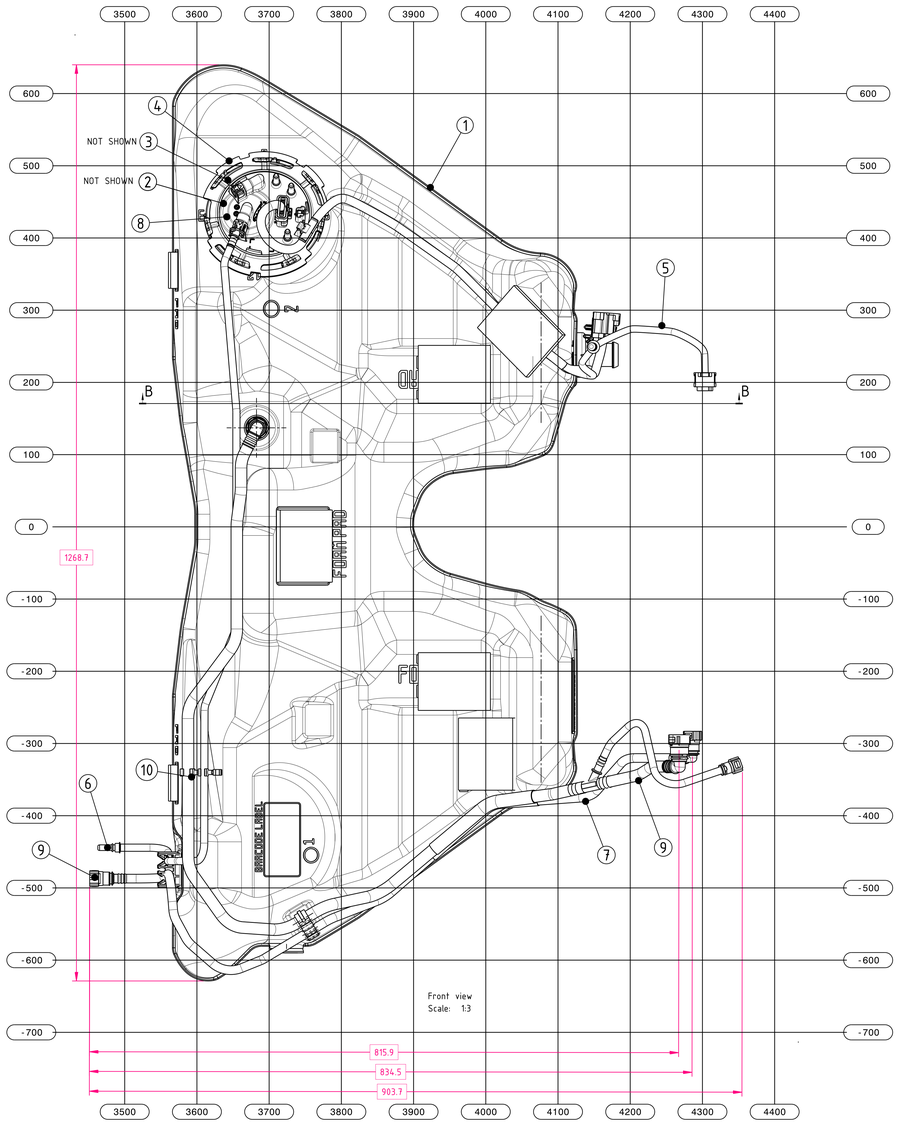

Front view
Scale: 1:3

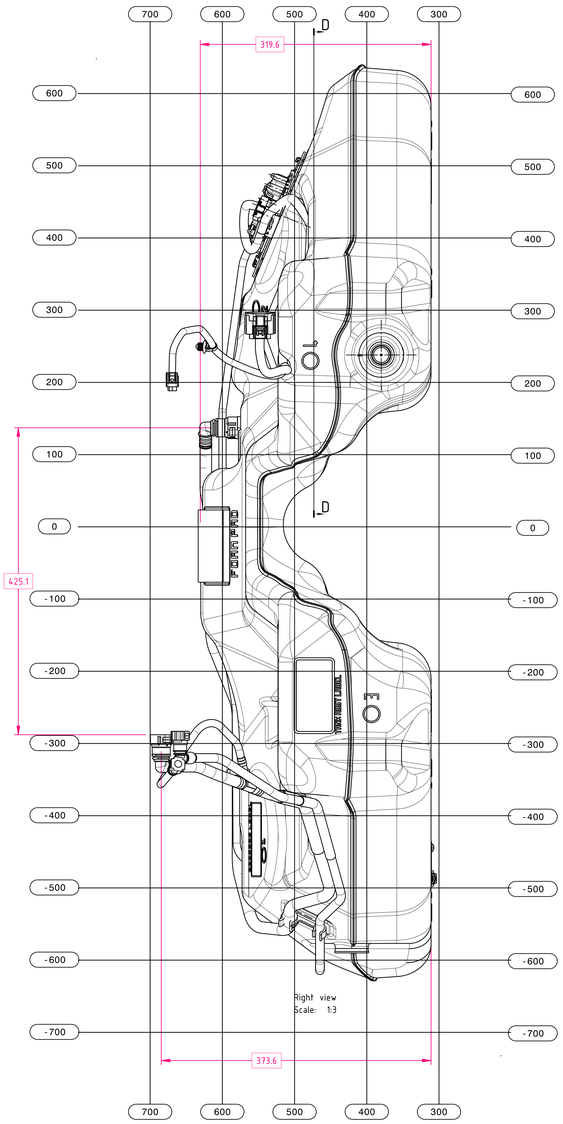

Right view
Scale: 1:3

		ITEM	PART NUMBER	DESCRIPTION	QUANTITY
J1	H1 G1 F1 D1	1	9X23-9002-AH	TNK ASY FUL	1
		2	9X23-9H307-AD	SDR & PMP ASY-FU/TNK	1
		3	6H52-9276-AA	GSKT-FU/TNK SDR	1
		4	9X23-9C385-AA	RG-FU/PMP RET LK	1
	H2 E1	5	9X23-14407-AC	HARNESS (PETROL)	1
		6	9X23-9327-AB	HOS ASY FUL TUB RR	1
		7	9X23-9A186-AB	PIP-FU/TNK VEN RR LH	1
	H3 F2	8	9X23-9A309-AD	FLNG FU/TNK SDR & OLET TUB MTNG	1
	C1	9	9X23-9C047-AC	TUB ASY FU/VPR CONTR VLV	1
		10	9X23-9S305-AA	CLP-FU/VPR TUB	1

DIMENSION		TOLERANCE
OVER	UPTO	+/-
0	127	2
127.1	254	3
254.1	508	4
508.1	OVER	5

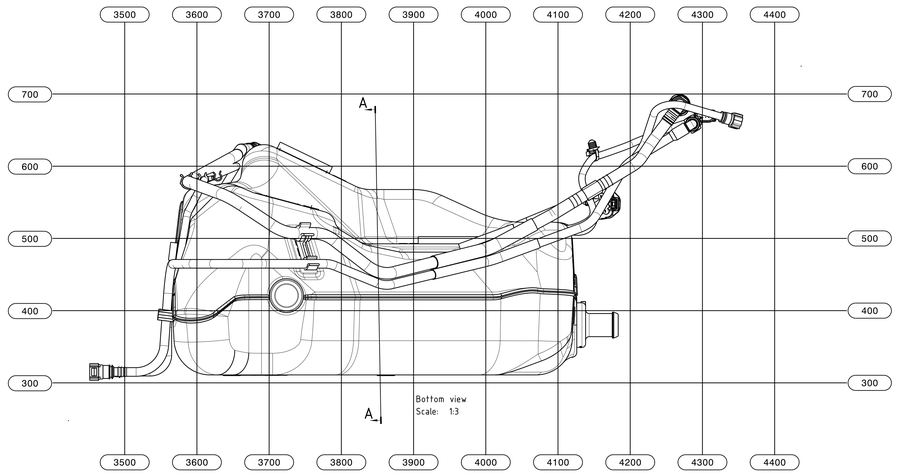

Bottom view
Scale: 1:3

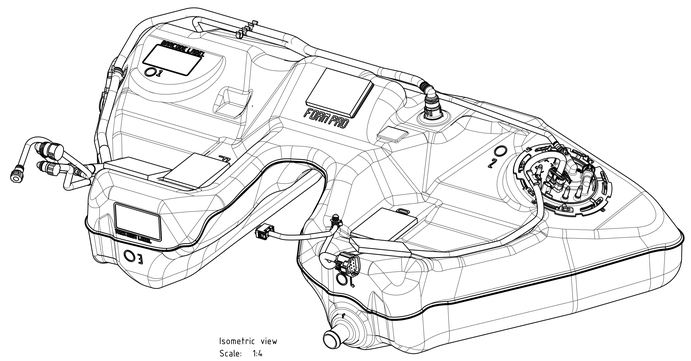

Isometric view
Scale: 1:4

LTRS	REVISIONS		
ORIGINATOR	CHECKER	ENGR APP	MATL APP
RELEASE OF 9X23-9K007-AA UEP2 I 11987659 000 20070406			
NMANDER	AWHITEMA	PGRAY18	MATS ENG
RELEASE OF 9X23-9K007-AC SUFFIX AB USED FOR 'T' RELEASE ONLY. NO DRAWING RELEASED C1. SUPPLEMENT K WAS CUSTOMER CRT C2. DVP SPECIFICATION NOTE ADDED C3. WEIGHTS & CAPACTIES UPDATED C4. TANK STOWAGE NOTE ADDED C5. CONNECTIONS NOTE MODIFIED C6. SERVICE NOTE UPDATED C7. PARTS TABLE UPDATED C8. INTERNAL CONNECTION TABLE UPDATED C9. LABEL DETAIL ADDED C10. RESISTANCE VALUES ADDED UEP2 E 12048779 001 20080130			
NMANDER	AWHITEMA	PGRAY18	MATS ENG
RELEASE OF 9X23-9K007-AD D1 ITEM 1 WAS 9X23-9002-AC UEP2 E 12084434 000 20080213			
NMANDER	AWHITEMA	PGRAY18	MATS ENG
RELEASE OF 9X23-9K007-AE E1 PART NUMBER UPDATES E2 SENDER READING UPDATE E3 SC'S & CC'S ADDED UEP2 E 12132335 001 20080620			
NMANDER	AWHITEMA	PGRAY18	MATS ENG
RELEASE OF 9X23-9K007-AF F1 FDM NUMBER UPDATE F2 FUEL TANK FLANGE NUMBER UPDATE F3 UPDATE TO 9X23-9002-AE DWG UEP2 E 12153716 001 20080905			
NMANDER	AWHITEMA	PGRAY18	MATS ENG
CAD REVISION OF 9X23-9K007-AF F4 ADDITION OF CCC NOTES F5 NOTE UPDATES UEP2 E 12181432 000 20081104			
NMANDER	AWHITEMA	PGRAY18	MATS ENG
CAD RELEASE OF 9X23-9K007-AG G1 TNK ASY FUL PART NO CHANGE UEP2 E 12201658 000 20090121			
NMANDER	AWHITEMA	PGRAY18	MATS ENG
RELEASE OF 9X23-9K007-AH H1 ITEM 1 WAS 9X23-9002-AF H2 ITEM 5 9X23-14407-AB H3 ITEM 8 WAS 9X23-9A309-AC UEP2 E 12240282 000 20090602			
NMANDER	AWHITEMA	PGRAY18	MATS ENG
RELEASE OF 9X23-9K007-AJ J1 ITEM 1 WAS 9X23-9002-AG UEP2 E 50004808 000 20101001			
KSENTHI7	CMITCH11	KWILKIN6	MATS ENG

REFERENCE DS-J_X250-100100-C810_18-10

PART MUST COMPLY WITH RESTRICTED SUBSTANCE MANAGEMENT STANDARD WSS-M99P9999-A1 TO SAFEGUARD HEALTH, SAFETY AND THE ENVIRONMENT

DRAFTED IN ACCORDANCE WITH FORD MOTOR COMPANY ENGINEERING CAD AND DRAFTING STANDARDS VERSION 17.0

3RD ANGLE PROJ
DIMENSIONS ARE IN MILLIMETERS

CAD TYPE	CAD LOC.	CAD FILE	DTMC
K-CATIA5	TCE	FDR9X239K007A20 ;12	IS MASTER
OPER. NO.	UNIT	DRAWING	
GBIELBY	N/A	9X23-9K007-AJ	
DESIGN	DETAIL	TITLE	SHT 2
GBIELBY	GBIELBY	TNK & SDR ASY FUL	OF 3
CHECKED	SAFETY		
AWHITEMA	N/A		
SCALE	DATE	DIVISION JAGUAR	
1:1	20070221	PLANT GAYDON	

FEDERAL FUEL TANK TOP LEVEL ASSY

PRINTED COPIES ARE UNCONTROLLED

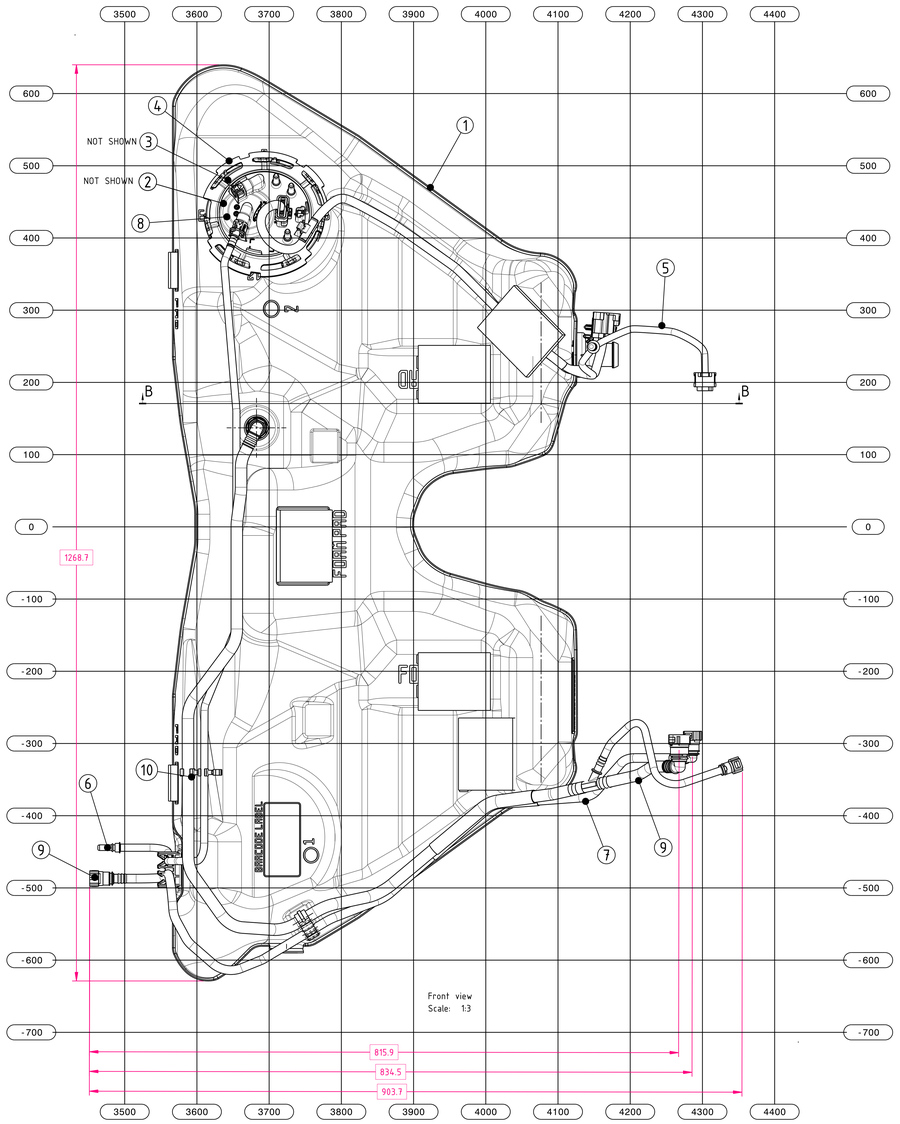

Front view
Scale: 1:3

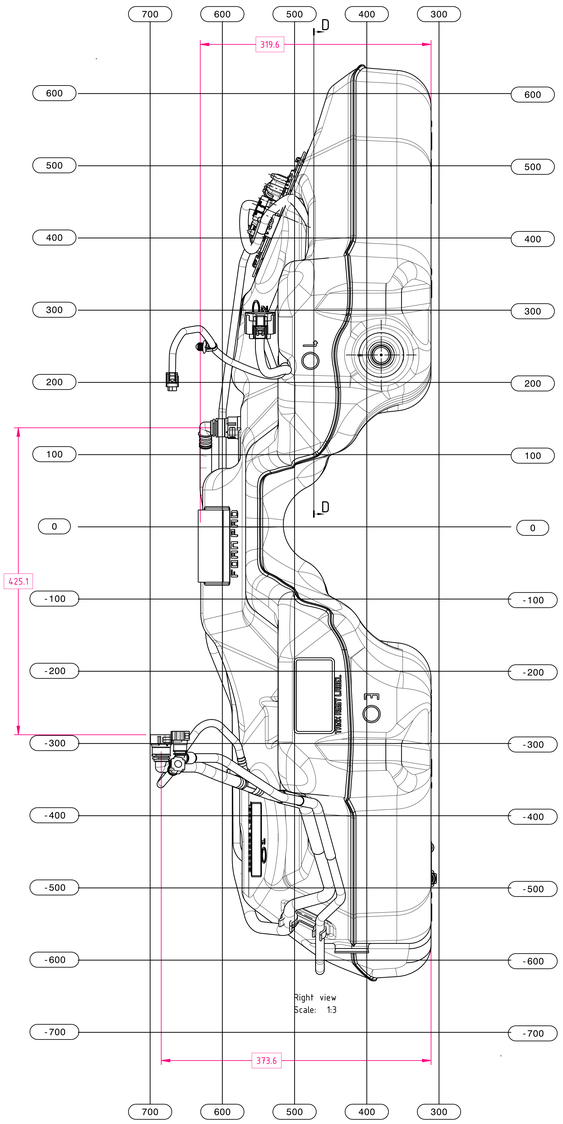

Right view
Scale: 1:3

		ITEM	PART NUMBER	DESCRIPTION	QUANTITY
J1	H1 G1 F1 D1	1	9X23-9002-AH	TNK ASY FUL	1
		2	9X23-9H307-AD	SDR & PMP ASY-FU/TNK	1
		3	6H52-9276-AA	GSKT-FU/TNK SDR	1
		4	9X23-9C385-AA	RG-FU/PMP RET LK	1
	H2 E1	5	9X23-14407-AC	HARNESS (PETROL)	1
		6	9X23-9327-AB	HOS ASY FUL TUB RR	1
		7	9X23-9A186-AB	PIP-FU/TNK VEN RR LH	1
	H3 F2	8	9X23-9A309-AD	FLNG FU/TNK SDR & OLET TUB MTNG	1
	C1	9	9X23-9C047-AC	TUB ASY FU/VPR CONTR VLV	1
		10	9X23-9S305-AA	CLP-FU/VPR TUB	1

DIMENSION		TOLERANCE
OVER	UPTO	+/-
0	127	2
127.1	254	3
254.1	508	4
508.1	OVER	5

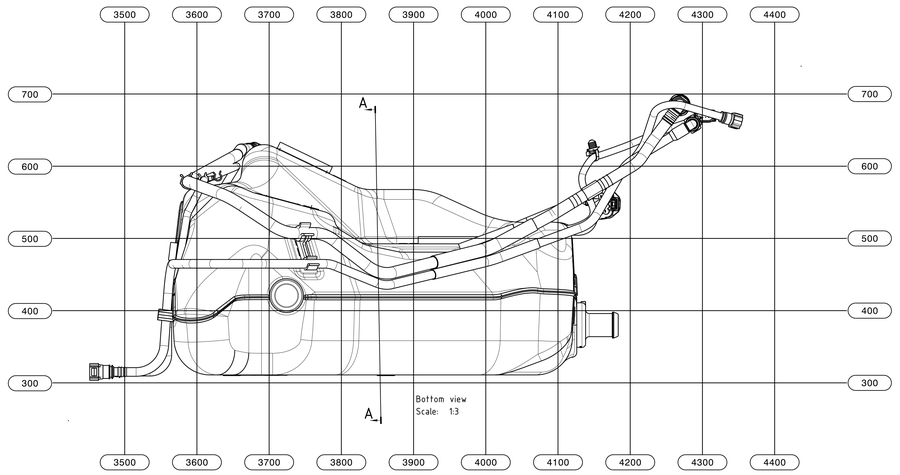

Bottom view
Scale: 1:3

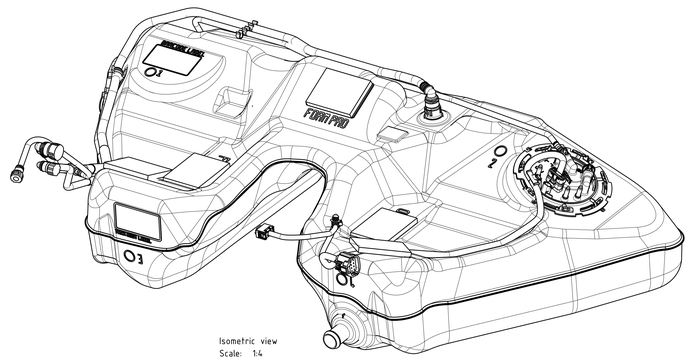

Isometric view
Scale: 1:4

LTRS	REVISIONS		
ORIGINATOR	CHECKER	ENGR APP	MATL APP
RELEASE OF 9X23-9K007-AA UEP2 I 11987659 000 20070406			
NMANDER	AWHITEMA	PGRAY18	MATS ENG
RELEASE OF 9X23-9K007-AC SUFFIX AB USED FOR 'T' RELEASE ONLY. NO DRAWING RELEASED C1. SUPPLEMENT K WAS CUSTOMER CRT C2. DVP SPECIFICATION NOTE ADDED C3. WEIGHTS & CAPACTIES UPDATED C4. TANK STOWAGE NOTE ADDED C5. CONNECTIONS NOTE MODIFIED C6. SERVICE NOTE UPDATED C7. PARTS TABLE UPDATED C8. INTERNAL CONNECTION TABLE UPDATED C9. LABEL DETAIL ADDED C10. RESISTANCE VALUES ADDED UEP2 E 12048779 001 20080130			
NMANDER	AWHITEMA	PGRAY18	MATS ENG
RELEASE OF 9X23-9K007-AD D1 ITEM 1 WAS 9X23-9002-AC UEP2 E 12084434 000 20080213			
NMANDER	AWHITEMA	PGRAY18	MATS ENG
RELEASE OF 9X23-9K007-AE E1 PART NUMBER UPDATES E2 SENDER READING UPDATE E3 SC'S & CC'S ADDED UEP2 E 12132335 001 20080620			
NMANDER	AWHITEMA	PGRAY18	MATS ENG
RELEASE OF 9X23-9K007-AF F1 FDM NUMBER UPDATE F2 FUEL TANK FLANGE NUMBER UPDATE F3 UPDATE TO 9X23-9002-AE DWG UEP2 E 12153716 001 20080905			
NMANDER	AWHITEMA	PGRAY18	MATS ENG
CAD REVISION OF 9X23-9K007-AF F4 ADDITION OF CCC NOTES F5 NOTE UPDATES UEP2 E 12181432 000 20081104			
NMANDER	AWHITEMA	PGRAY18	MATS ENG
CAD RELEASE OF 9X23-9K007-AG G1 TNK ASY FUL PART NO CHANGE UEP2 E 12201658 000 20090121			
NMANDER	AWHITEMA	PGRAY18	MATS ENG
RELEASE OF 9X23-9K007-AH H1 ITEM 1 WAS 9X23-9002-AF H2 ITEM 5 9X23-14407-AB H3 ITEM 8 WAS 9X23-9A309-AC UEP2 E 12240282 000 20090602			
NMANDER	AWHITEMA	PGRAY18	MATS ENG
RELEASE OF 9X23-9K007-AJ J1 ITEM 1 WAS 9X23-9002-AG UEP2 E 50004808 000 20101001			
KSENTHI7	CMITCH11	KWILKIN6	MATS ENG

REFERENCE DS-J_X250-100100-C810_18-10

PART MUST COMPLY WITH RESTRICTED SUBSTANCE MANAGEMENT STANDARD WSS-M99P9999-A1 TO SAFEGUARD HEALTH, SAFETY AND THE ENVIRONMENT

DRAFTED IN ACCORDANCE WITH FORD MOTOR COMPANY ENGINEERING CAD AND DRAFTING STANDARDS VERSION 17.0

3RD ANGLE PROJ
DIMENSIONS ARE IN MILLIMETERS

CAD TYPE	CAD LOC.	CAD FILE	DTMC
K-CATIA5	TCE	FDR9X239K007A20 ;12	IS MASTER
OPER. NO.	UNIT	DRAWING	
GBIELBY	N/A	9X23-9K007-AJ	
DESIGN	DETAIL	TITLE	SHT 2
GBIELBY	GBIELBY	TNK & SDR ASY FUL	OF 3
CHECKED	SAFETY		
AWHITEMA	N/A		
SCALE	DATE	DIVISION JAGUAR	
1:1	20070221	PLANT GAYDON	

FEDERAL FUEL TANK TOP LEVEL ASSY

PRINTED COPIES ARE UNCONTROLLED

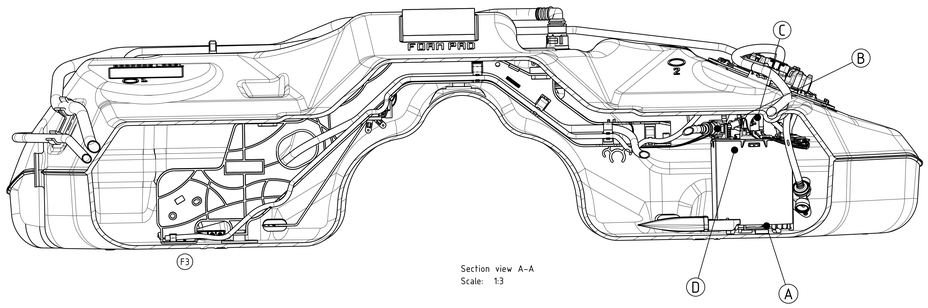

Section view A-A
Scale: 1:3

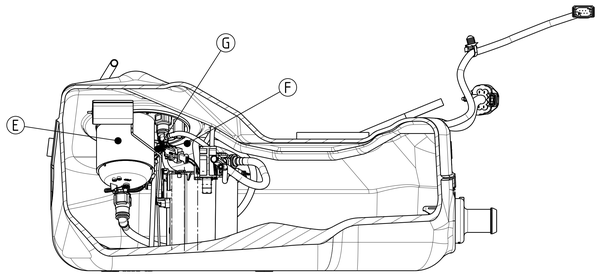

Section view B-B
Scale: 1:3

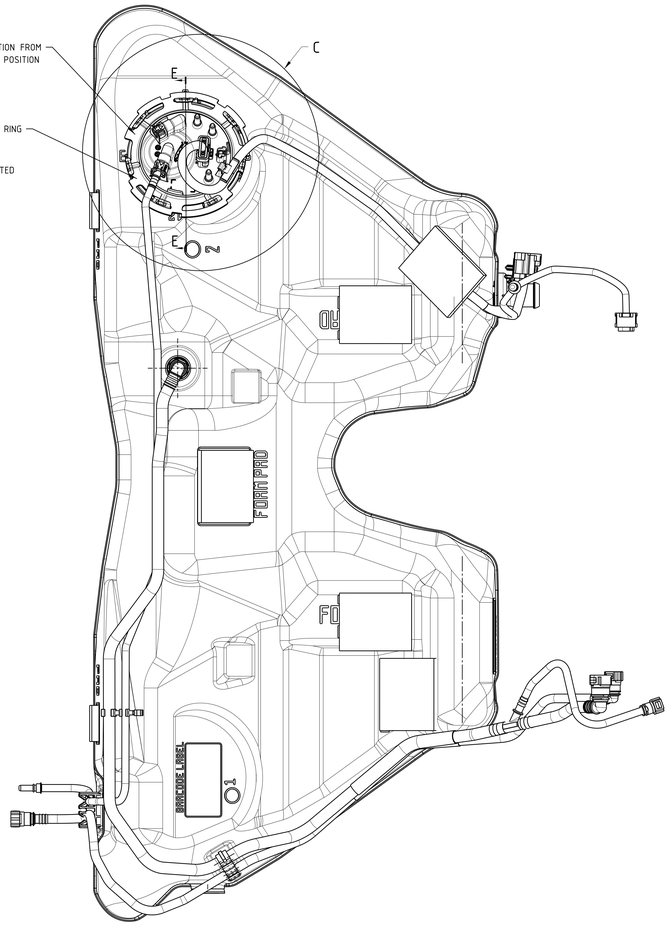

Front view
Scale: 1:3

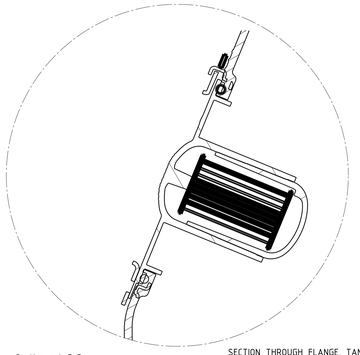

Section cut E-E
Scale: 2:3

SECTION THROUGH FLANGE, TANK, SEAL, ENCAPSULATED RING AND LOCKING RING.

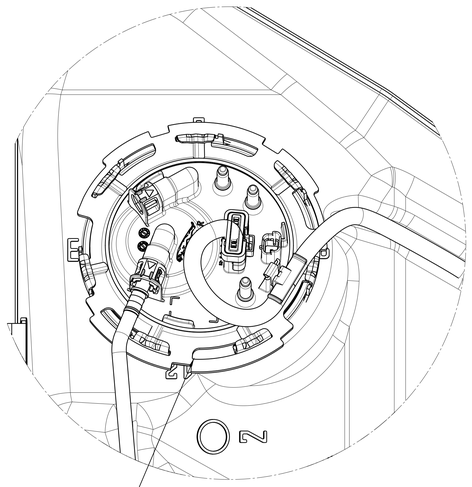

Detail C
Scale: 2:3

* FLANGE TAB TO BE LOCATED IN THIS ORIENTATION

ITEMS 4,5,6 AND 7 ARE OMITTED FOR CLARITY

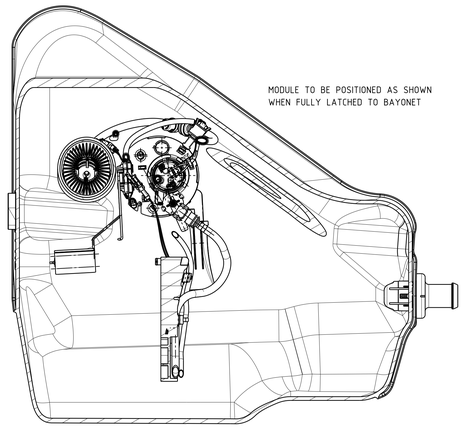

Section view D-D
Scale: 1:3

C8

TANK INTERNAL CONNECTIONS

	ITEM No	CONNECTION DESCRIPTION
*	A	SDR & PMP ASY PETROL TO BAYONET
*	B	VPR & BRKT ASY-FUL VENTURI TO SDR & PMP ASY
*	C	SDR & PMP ASY ELECTRICAL CONNECTOR TO VPR & BRKT ASY-FUL ELECTICAL CONNECTOR
▽	D	SDR & PMP FEED LINE CONNECTION TO FLNG FU/TNK SDR & OLET TUB MTNG
*	E	VPR & BRKT ASY-FUL DRAIN TUBE TO SDR & PMP ASY FLANGE
*	F	SDR & PMP ASY EARTH ELECTRICAL CONNECTOR TO SDR & PMP ASY FLANGE
*	G	SDR & PMP ASY ELECTRICAL CONNECTOR TO SDR & PMP ASY FLANGE

LTRS	REVISIONS		
ORIGINATOR	CHECKER	ENGR APP	MATL APP
RELEASE OF 9X23-9K007-AA UEP2 I 11987659 000 20070406			
NMANDER	AWHITEMA	PGRAY18	MATS ENG
RELEASE OF 9X23-9K007-AC SUFFIX AB USED FOR 'T' RELEASE ONLY. NO DRAWING RELEASED C1. SUPPLEMENT K WAS CUSTOMER CRT C2. DVP SPECIFICATION NOTE ADDED C3. WEIGHTS & CAPACTIES UPDATED C4. TANK STOWAGE NOTE ADDED C5. CONNECTIONS NOTE MODIFIED C6. SERVICE NOTE UPDATED C7. PARTS TABLE UPDATED C8. INTERNAL CONNECTION TABLE UPDATED C9. LABEL DETAIL ADDED C10. RESISTANCE VALUES ADDED UEP2 E 12048779 001 20080130			
NMANDER	AWHITEMA	PGRAY18	MATS ENG
RELEASE OF 9X23-9K007-AD D1 ITEM 1 WAS 9X23-9002-AC UEP2 E 12084434 000 20080213			
NMANDER	AWHITEMA	PGRAY18	MATS ENG
RELEASE OF 9X23-9K007-AE E1 PART NUMBER UPDATES E2 SENDER READING UPDATE E3 SC'S & CC'S ADDED UEP2 E 12132335 001 20080620			
NMANDER	AWHITEMA	PGRAY18	MATS ENG
RELEASE OF 9X23-9K007-AF F1 FDM NUMBER UPDATE F2 FUEL TANK FLANGE NUMBER UPDATE F3 UPDATE TO 9X23-9002-AE UEP2 E 12153716 001 20080905			
NMANDER	AWHITEMA	PGRAY18	MATS ENG
CAD REVISION OF 9X23-9K007-AF F4 ADDITION OF CCC NOTES F5 NOTE UPDATES UEP2 E 12181432 000 20081104			
NMANDER	AWHITEMA	PGRAY18	MATS ENG
CAD RELEASE OF 9X23-9K007-AG G1 TNK ASY FUL PART NO CHANGE UEP2 E 12201658 000 20090121			
NMANDER	AWHITEMA	PGRAY18	MATS ENG
RELEASE OF 9X23-9K007-AH H1 ITEM 1 WAS 9X23-9002-AF H2 ITEM 5 9X23-14407-AB H3 ITEM 8 WAS 9X23-9A309-AC UEP2 E 12240282 000 20090602			
NMANDER	AWHITEMA	PGRAY18	MATS ENG
RELEASE OF 9X23-9K007-AJ J1 ITEM 1 WAS 9X23-9002-AG UEP2 E 50004808 000 20101001			
KSENTHI7	CMITCH11	KWILKIN6	MATS ENG

REFERENCE		DS-J_X250-100100-C810_18-10	
PART MUST COMPLY WITH RESTRICTED SUBSTANCE MANAGEMENT STANDARD WSS-M99P9999-A1 TO SAFEGUARD HEALTH, SAFETY AND THE ENVIRONMENT			
DRAFTED IN ACCORDANCE WITH FORD MOTOR COMPANY ENGINEERING CAD AND DRAFTING STANDARDS VERSION 17.0		3RD ANGLE PROJ DIMENSIONS ARE IN MILLIMETERS	
CAD TYPE K-CATIA5	CAD LOC. TCE	CAD FILE FDR9X239K007A20 ;12	DTMC IS MASTER
OPER. NO. GBIELBY	UNIT N/A	DRAWING 9X23-9K007-AJ	
DESIGN GBIELBY	DETAIL GBIELBY	TITLE TNK & SDR ASY FUL	SHT 3 OF 3
CHECKED AWHITEMA	SAFETY N/A		
SCALE 1:1	DATE 20070221	DIVISION JAGUAR PLANT GAYDON	

FEDERAL FUEL TANK TOP LEVEL ASSY

PRINTED COPIES ARE UNCONTROLLED

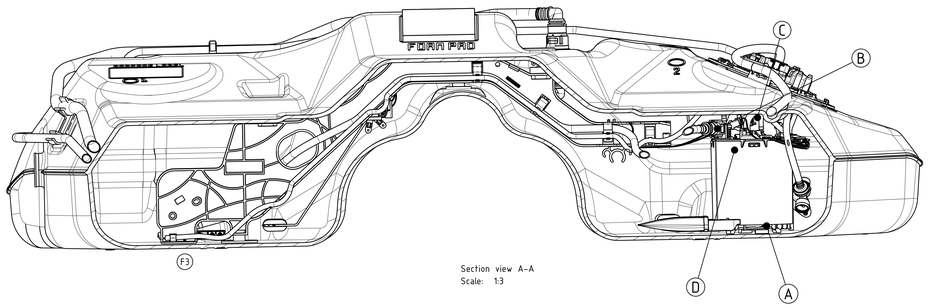

Section view A-A
Scale: 1:3

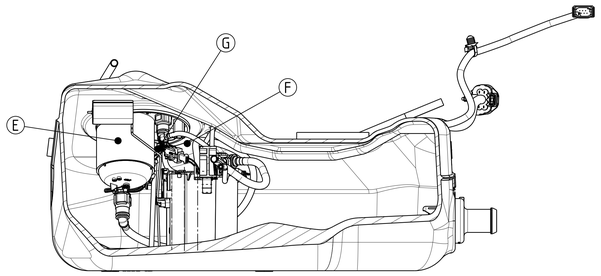

Section view B-B
Scale: 1:3

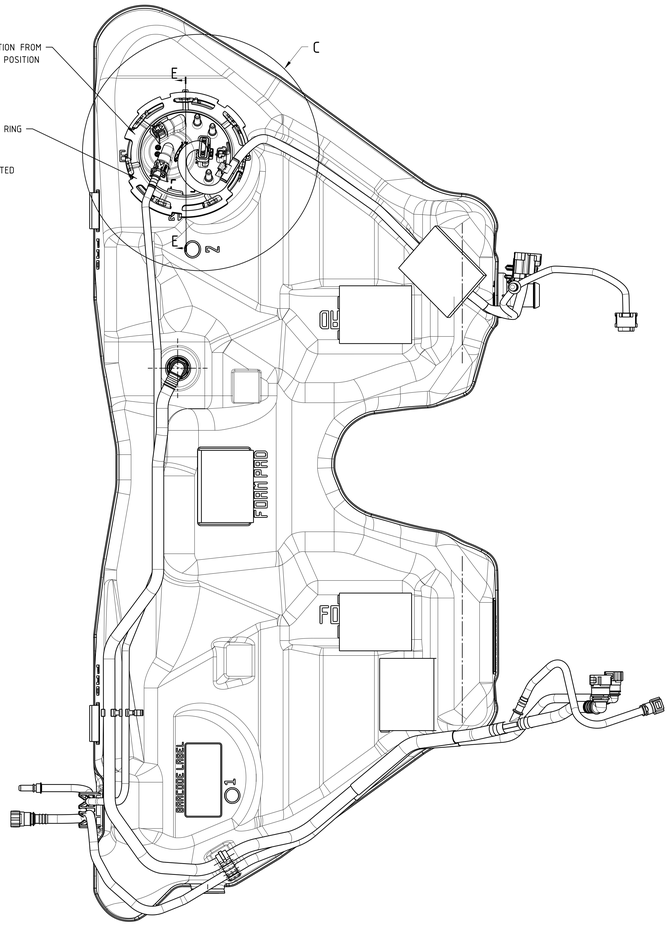

Front view
Scale: 1:3

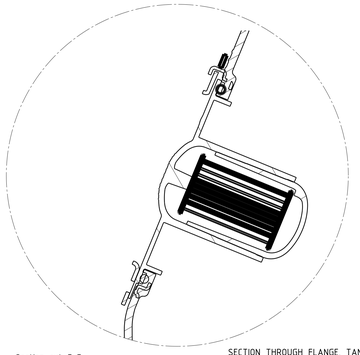

Section cut E-E
Scale: 2:3

SECTION THROUGH FLANGE, TANK, SEAL, ENCAPSULATED RING AND LOCKING RING.

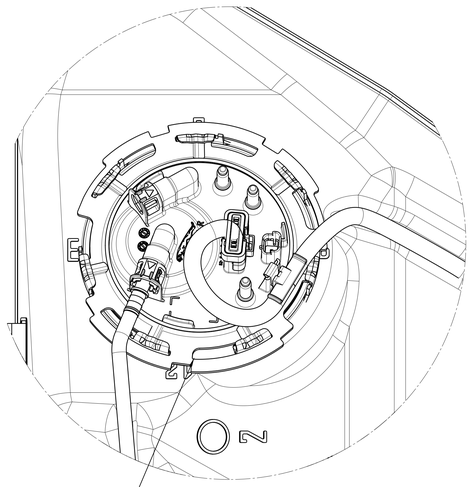

Detail C
Scale: 2:3

* FLANGE TAB TO BE LOCATED IN THIS ORIENTATION

ITEMS 4,5,6 AND 7 ARE OMITTED FOR CLARITY

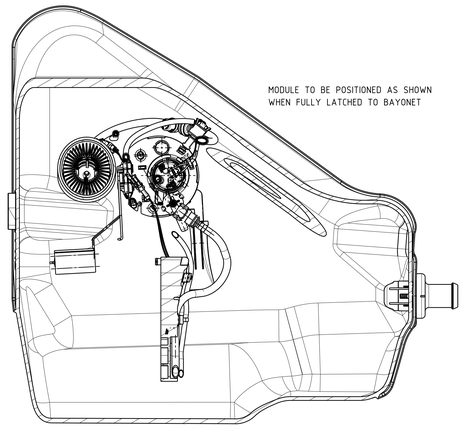

Section view D-D
Scale: 1:3

C8

TANK INTERNAL CONNECTIONS

	ITEM No	CONNECTION DESCRIPTION
*	A	SDR & PMP ASY PETROL TO BAYONET
*	B	VPR & BRKT ASY-FUL VENTURI TO SDR & PMP ASY
*	C	SDR & PMP ASY ELECTRICAL CONNECTOR TO VPR & BRKT ASY-FUL ELECTICAL CONNECTOR
▽	D	SDR & PMP FEED LINE CONNECTION TO FLNG FU/TNK SDR & OLET TUB MTNG
*	E	VPR & BRKT ASY-FUL DRAIN TUBE TO SDR & PMP ASY FLANGE
*	F	SDR & PMP ASY EARTH ELECTRICAL CONNECTOR TO SDR & PMP ASY FLANGE
*	G	SDR & PMP ASY ELECTRICAL CONNECTOR TO SDR & PMP ASY FLANGE

LTRS	REVISIONS		
ORIGINATOR	CHECKER	ENGR APP	MATL APP
RELEASE OF 9X23-9K007-AA UEP2 I 11987659 000 20070406			
NMANDER	AWHITEMA	PGRAY18	MATS ENG
RELEASE OF 9X23-9K007-AC SUFFIX AB USED FOR 'T' RELEASE ONLY. NO DRAWING RELEASED C1. SUPPLEMENT K WAS CUSTOMER CRT C2. DVP SPECIFICATION NOTE ADDED C3. WEIGHTS & CAPACTIES UPDATED C4. TANK STOWAGE NOTE ADDED C5. CONNECTIONS NOTE MODIFIED C6. SERVICE NOTE UPDATED C7. PARTS TABLE UPDATED C8. INTERNAL CONNECTION TABLE UPDATED C9. LABEL DETAIL ADDED C10. RESISTANCE VALUES ADDED UEP2 E 12048779 001 20080130			
NMANDER	AWHITEMA	PGRAY18	MATS ENG
RELEASE OF 9X23-9K007-AD D1 ITEM 1 WAS 9X23-9002-AC UEP2 E 12084434 000 20080213			
NMANDER	AWHITEMA	PGRAY18	MATS ENG
RELEASE OF 9X23-9K007-AE E1 PART NUMBER UPDATES E2 SENDER READING UPDATE E3 SC'S & CC'S ADDED UEP2 E 12132335 001 20080620			
NMANDER	AWHITEMA	PGRAY18	MATS ENG
RELEASE OF 9X23-9K007-AF F1 FDM NUMBER UPDATE F2 FUEL TANK FLANGE NUMBER UPDATE F3 UPDATE TO 9X23-9002-AE UEP2 E 12153716 001 20080905			
NMANDER	AWHITEMA	PGRAY18	MATS ENG
CAD REVISION OF 9X23-9K007-AF F4 ADDITION OF CCC NOTES F5 NOTE UPDATES UEP2 E 12181432 000 20081104			
NMANDER	AWHITEMA	PGRAY18	MATS ENG
CAD RELEASE OF 9X23-9K007-AG G1 TNK ASY FUL PART NO CHANGE UEP2 E 12201658 000 20090121			
NMANDER	AWHITEMA	PGRAY18	MATS ENG
RELEASE OF 9X23-9K007-AH H1 ITEM 1 WAS 9X23-9002-AF H2 ITEM 5 9X23-14407-AB H3 ITEM 8 WAS 9X23-9A309-AC UEP2 E 12240282 000 20090602			
NMANDER	AWHITEMA	PGRAY18	MATS ENG
RELEASE OF 9X23-9K007-AJ J1 ITEM 1 WAS 9X23-9002-AG UEP2 E 50004808 000 20101001			
KSENTHI7	CMITCH11	KWILKIN6	MATS ENG

REFERENCE		DS-J_X250-100100-C810_18-10	
PART MUST COMPLY WITH RESTRICTED SUBSTANCE MANAGEMENT STANDARD WSS-M99P9999-A1 TO SAFEGUARD HEALTH, SAFETY AND THE ENVIRONMENT			
DRAFTED IN ACCORDANCE WITH FORD MOTOR COMPANY ENGINEERING CAD AND DRAFTING STANDARDS VERSION 17.0		3RD ANGLE PROJ DIMENSIONS ARE IN MILLIMETERS	
CAD TYPE K-CATIA5	CAD LOC. TCE	CAD FILE FDR9X239K007A20 ;12	DTMC IS MASTER
OPER. NO. GBIELBY	UNIT N/A	DRAWING 9X23-9K007-AJ	
DESIGN GBIELBY	DETAIL GBIELBY	TITLE TNK & SDR ASY FUL	SHT 3 OF 3
CHECKED AWHITEMA	SAFETY N/A		
SCALE 1:1	DATE 20070221	DIVISION JAGUAR PLANT GAYDON	

FEDERAL FUEL TANK TOP LEVEL ASSY

PRINTED COPIES ARE UNCONTROLLED

NOTES:

C1 * REFER TO SUPPLEMENT K DOCUMENT AND CRT

THIS ASSEMBLY MUST COMPLY WITH THE REQUIREMENTS OF ENGINEERING SPECIFICATION ES 3U5A-9002-BB, EXCEPT FOR THE SECTION 3.6 CONTAMINATION WHERE NOTE BELOW APPLIES.

C2 THIS ASSY MUST COMPLY WITH THE REQUIREMENTS OF ENGINEERING SPECIFICATION FTDVPX250.10

LOCKING RING TO MEET THE REQUIREMENTS OF SAE J2587.

COMPONENT TO BE MARKED IN LINE WITH FORD MOTOR COMPANY ENGINEERING CAD & DRAFTING STANDARD E-3.
COMPONENT TO COMPLY WITH THE IDENTIFICATION OF FORD MOTOR COMPANY ENGINEERING CAD & DRAFTING STANDARD E-4 FOR POLYMERIC MATERIALS.

GROSS CAPACITY - 79.55 LITRES

F5 C3 EMPTY TO DESIGN CUT OFF - 71.1 LITRES

USABLE CAPACITY - 69.5 LITRES

WEIGHT OF FUEL TANK ASSEMBLY - 12.550Kg ± 0.5Kg

* TOTAL INTERNAL DEBRIS MUST NOT EXCEED 4.0mg WHEN TESTED TO LRLTM 30.IC101 OR SIMILAR APPROVED METHOD.
THE MAXIMUM PERMISSIBLE PARTICLE SIZE MUST NOT EXCEED 400 microns/0.6mg WHEN MEASURED IN ACCORDANCE WITH LRLTM 30.DD.103.

FOR CURRENT RELEASE STATUS SEE WERS ENGINEERING NOTICE.

THIS ASSEMBLY IS TO CONFORM TO THE GPDS REQUIREMENTS OF THE RELEVANT FORD AND JAGUAR / LAND ROVER SPECIFICATIONS CONTAINED IN THE DESIGN VERIFICATION PLAN LATEST ISSUE.

AS SUPPLIER TO JAGUAR / LAND ROVER COMPONENT MUST BE FREE INTERNALLY FROM THE FOLLOWING:-
- ALL MANUFACTURING AND PROCESS TEST FLUIDS.
- ALL IN PROCESS PRESSURE TEST FLUIDS.
- ALL MANUFACTURING DEBRIS, SWARF OR WELD SPATTER.
-WATER, DIRT OR DUST INGRESS.

FULL TRACEABILITY TO BE INDELIBLY MARKED / LABELLED ON THIS ASSEMBLY WITH REGARD TO YEAR, MONTH, DAY, TIME, ASSEMBLY LINE TEST DATA AND CRITICAL SECOND TIER SUPPLIER COMPONENTS ie FUEL DELIVERY MODULE AND SENDER(S).

THIS ASSEMBLY IS TO MEET THE LEGISLATIVE REQUIREMENTS OF ECE34, ECE34 ANNEX 5 AND EEC DIRECTIVE 70/221, CHINA FUEL TANKS.

▽ 100% LEAK TEST: PRESSURE DIFFERENTIAL TEST USING 100% HELIUM. LEAK RATE TO BE LESS THAN 1.4 x 10^{-5} l/s AT 140 mbar DIFFERENTIAL PRESSURE.
AFTER LEAK TESTING NO PART TO BE REMOVED OR CHANGED WITHOUT RETESTING.

▽ 100% FUEL PUMP MODULE AND SENDER UNIT AND TANK VALVE FUNCTIONALITY TESTS TO BE CARRIED OUT IN LINE WITH PROCESS CONTROL DOCUMENTS AGREED WITH JAGUAR/LANDROVER PRODUCT ENGINEERING AND STA DEPARTMENTS.

▽ PUMP START TEST - MEDIUM AIR, VOLTAGE 6+/-0.1V.
MEASURING TIME 1<t<5 SECS.
CURRENT <4A. MAX 2 TESTS.

▽ ACTIVE SENDER UNIT ROLL OVER TEST TO CONFORM -
C10 SENDER FLOAT POSITION EMPTY RESISTANCE VALUE WITHIN TOLERANCE 51.2±1
SENDER FLOAT POSITION FULL RESISTANCE VALUE WITHIN TOLERANCE 992±10.5
SENDER FLOAT BACK TO EMPTY RESISTANCE VALVE WITHIN TOLERANCE 51.2±1

▽ PASSIVE SENDER UNIT ROLL OVER TEST TO CONFORM -
SENDER FLOAT POSITION EMPTY RESISTANCE VALUE WITHIN TOLERANCE: 51.2±1Ω
E2 SENDER FLOAT POSITION FULL RESISTANCE VALUE WITHIN TOLERANCE: 445±25Ω
SENDER FLOAT POSITION BACK TO EMPTY RESISTANCE VALUE WITHIN TOLERANCE: 51.2±1Ω

C4 FOR ELECTRICAL CONNECTOR PIN OUT INFORMATION REFER TO DRAWING 9X23-9A309-A LATEST ISSUE.

FUEL TANK GASKET TO BE CLEAN AND FREE FROM ANY SURFACE IMPERFECTION THAT MAY BE DETRIMENTAL TO ITS SEALING INTEGRITY.

REFER TO FUEL TANK ASSY STOWAGE POSITION DOCUMENT FOR DELIVERED CONDITION TO CASTLE BROMWICH ASSY PLANT.

▽ 100% TANK VENT SYSTEM - VACUUM TEST
ROLL TANK OVER 180° FROM NORMAL VEHICLE FITTED POSITION.
APPLY A VACUUM OF AT LEAST - 150mb.
APPLY THE VACUUM AT THE BREATHER STUB CONNECTION.
EVACUATION TIME 5 SECS MINIMUM.
STABILISATION TIME 10 SECS MINIMUM.
LEAK CHECK FOR 20 SECS MINIMUM.
LEAK RATE TO BE <50ccm.
RELEASE VACUUM, ROLL BACK TO NORMAL VEHICLE FITTED POSITION.

C5 ALL INTERNAL & EXTERNAL CONNECTIONS TO BE 100% VERIFIED.

▽ TORQUE FIGURES TO BE 100% MONITORED AND RECORDED ON AN AUDIT SYSTEM - ITEM 4 TIGHTEN CAM LOCK TO CLOSURE STOP. TORQUE TO ACHIEVE THIS 250Nm ±20Nm ANGULAR ROTATION START AND FINISH TO BE MONITORED DURING ASSEMBLY. ANGULAR ROTATION 17.3°.

ALL FUEL LINES AND TANK OPENINGS AS DESIGNATED TO BE CAPPED DURING ASSEMBLY, TRANSPORT AND STORAGE. CAP(S) MUST PROTECT ANY SEALING SURFACE AND MUST REMAIN EFFECTIVE FOR PROLONGED STORAGE. CAP(S) MUST EASILY BE REMOVED WITHOUT THE USE OF TOOLS. IT MUST NOT BE POSSIBLE TO FIT ASSEMBLY TO MATING COMPONENTS WITH CAP(S) STILL IN PLACE.

* NO LUBRICANT TO BE USED DURING THE MANUFACTURE OF PARTS OR ASSEMBLY OF PARTS UNLESS AUTHORISED BY JLR MATERIALS AND FUEL SYSTEM ENGINEERING DEPARTMENTS.

COMPONENT TO BE STOWED, PALLETISED, TRANSPORTED AND STORED SUCH THAT NO DISTORTION OF FORM, INTERNAL OR EXTERNAL DAMAGE OR DIRT INGRESS CAN OCCUR TO THE ASSEMBLY.

ASSEMBLY TO BE FREE FROM FLASH, BURRS, SHARP EDGES AND ANY OTHER IMPERFECTIONS THAT MAY CAUSE INJURY DURING HANDLING OR THAT WOULD BE DETRIMENTAL TO ITS ASSEMBLY OR PERFORMANCE.

CHANGES AFFECTING DESIGN, COMPOSITION OR PROCESSING TO THE ASSEMBLY OR SUB COMPONENTS PREVIOUSLY APPROVED FOR PRODUCTION REQUIRE PRIOR APPROVAL FROM JLR PRODUCT ENGINEERING. REFER TO QS9000.

ENGINEERING APPROVAL OF A MINIMUM OF SIX SAMPLES FROM EACH SUPPLIER IS REQUIRED PRIOR TO FIRST SHIPMENT OF PARTS FOR INITIAL RELEASE AND FOR SUBSEQUENT CHANGE REQUESTS.

UNLESS OTHERWISE SPECIFIED ALL LINES AND SURFACES, SAME SIDE OF MATERIAL AS DATUM.

ALL SEALING SURFACES TO BE CLEAN AND FREE FROM ANY SURFACE IMPERFECTIONS (INCLUDING) HOLES, SPOTS, DENTS, FLASH AND OFFSET MOULDING LINES.

AFTER ASSEMBLY ALL HOSES, PIPES TO BE FREE FROM KINKS.

DO NOT USE HOSES / PIPES ATTACHED TO THIS ASSEMBLY TO REMOVE FROM STILLAGE OR CARRY COMPONENT.

ALL PROTECTIVE CAPS TO BE REMOVED, AND LINES AND ELECTRICAL CONNECTOR TO BE UNSTOWED PRIOR TO ASSEMBLY OF COMPONENT TO VEHICLE.

TEST CERTIFICATION LABEL / FINISHED GOODS LABEL -
- DATE OF FINAL ASSEMBLY
C9 - TIME OF FINAL ASSEMBLY
- SEQUENTIAL ID NUMBER. (WHICH CORRELATES AGAINST CAQ DATA)
- PRODUCT DESCRIPTION & VARIENT INFORMATION
- PART NUMBER

IT IS THE RESPONSIBILITY OF THE COMPONENT / ASSEMBLY MANUFACTURER TO ENSURE THAT THE COMPONENT / ASSEMBLY MEETS THE REQUIREMENTS OF THE CHINESE PARTS MARKING - CCC

F4 IT IS ALSO THE RESPONSIBILITY OF THE COMPONENT / ASSEMBLY MANUFACTURER TO ENSURE THAT COPIES OF APPROVAL CERTIFICATES FOR BOTH THE ASSEMBLY PLANT AND THE COMPONENT / ASSEMBLY MUST BE FORWARDED TO THE RELEVANT JLR REPRESENTATIVE UPON ISSUE FROM THE CHINESE AUTHORITIES

C6 SERVICE NOTE:
IF ITEM 8 FLNG FU/TNK SDR & OLET TUB MTNG (FLANGE) IS REMOVED OR DISTURBED IN SERVICE A NEW GSKT FU/TNK SDR ITEM 3 MUST BE USED. REFER TO SHEET 3 FOR CORRECT ORIENTATION REPLACEMENT OF ITEM 4 RG - FU/TNK.

▽ CONTROL ITEM - THE ▽ ALSO IDENTIFIES CRITICAL CHARACTERISTICS DESIGNATED BY THE CROSS FUNCTIONAL TEAMS DEVELOPING THE PRODUCT. THESE AND ADDITIONAL CRITICAL CHARACTERISTICS IDENTIFIED BY PROCESS REVIEWS MUST APPEAR ON THE CONTROL PLANS ACCORDING TO QS-9000. THESE CONTROL PLANS REQUIRE PRODUCT ENGINEERING APPROVAL.

FEDERAL FUEL TANK TOP LEVEL ASSEMBLY

LTRS	REVISIONS		
ORIGINATOR	CHECKER	ENGR APP	MATL APP
RELEASE OF 9X23-9K007-AA UEP2 I 11987659 000 20070406			
NMANDER	AWHITEMA	PGRAY18	MATS ENG
RELEASE OF 9X23-9K007-AC SUFFIX AB USED FOR 'T' RELEASE ONLY. NO DRAWING RELEASED C1. SUPPLEMENT K WAS CUSTOMER CRT C2. DVP SPECIFICATION NOTE ADDED C3. WEIGHTS & CAPACITIES UPDATED C4. TANK STOWAGE NOTE ADDED C5. CONNECTIONS NOTE MODIFIED C6. SERVICE NOTE UPDATED C7. PARTS TABLE UPDATED C8. INTERNAL CONNECTION TABLE UPDATED C9. LABEL DETAILS ADDED C10. RESISTANCE VALUES ADDED UEP2 E 12048779 001 20080130			
NMANDER	AWHITEMA	PGRAY18	MATS ENG
RELEASE OF 9X23-9K007-AD D1 ITEM 1 WAS 9X23-9002-AC UEP2 E 12084434 000 20080213			
NMANDER	AWHITEMA	PGRAY18	MATS ENG
RELEASE OF 9X23-9K007-AE E1 PART NUMBER UPDATES E2 SENDER READING UPDATE E3 SC'S & CC'S ADDED UEP2 E 12132335 001 20080620			
NMANDER	AWHITEMA	PGRAY18	MATS ENG
RELEASE OF 9X23-9K007-AF F1 FDM NUMBER UPDATE F2 FUEL TANK FLANGE NUMBER UPDATE F3 UPDATE TO 9X23-9002-AE UEP2 E 12153716 001 20080905			
NMANDER	AWHITEMA	PGRAY18	MATS ENG
CAD REVISION OF 9X23-9K007-AF F4 ADDITION OF CCC NOTES F5 NOTE UPDATES UEP2 E 12181432 000 20081104			
NMANDER	AWHITEMA	PGRAY18	MATS ENG
CAD RELEASE OF 9X23-9K007-AG G1 TNK ASY FUL PART NO CHANGE UEP2 E 12201658 000 20090121			
NMANDER	AWHITEMA	PGRAY18	MATS ENG
RELEASE OF 9X23-9K007-AH H1 ITEM 1 WAS 9X23-9002-AF H2 ITEM 5 9X23-14407-AB H3 ITEM 8 WAS 9X23-9A309-AC UEP2 E 12240282 000 20090602			
NMANDER	AWHITEMA	PGRAY18	MATS ENG
RELEASE OF 9X23-9K007-AJ J1 ITEM 1 WAS 9X23-9002-AG UEP2 E 50004808 000 20101001			
KSENTHI7	CMITCH11	KWILKIN6	MATS ENG

REFERENCE	DS-J_X250-100100-C810_18-10		
PART MUST COMPLY WITH RESTRICTED SUBSTANCE MANAGEMENT STANDARD WSS-M99P9999-A1 TO SAFEGUARD HEALTH, SAFETY AND THE ENVIRONMENT			
DRAFTED IN ACCORDANCE WITH FORD MOTOR COMPANY ENGINEERING CAD AND DRAFTING STANDARDS VERSION 17.0		3RD ANGLE PROJ DIMENSIONS ARE IN MILLIMETERS	
CAD TYPE K-CATIA5	CAD LOC. TCE	CAD FILE FDR9X239K007A20 ;12	DTMC IS MASTER
OPER. NO. GBIELBY	UNIT N/A	DRAWING 9X23-9K007-AJ	
DESIGN GBIELBY	DETAIL GBIELBY	TITLE TNK & SDR ASY FUL	SHT 1 OF 3
CHECKED AWHITEMA	SAFETY N/A		
SCALE 1:1	DATE 20070221	DIVISION JAGUAR PLANT GAYDON	

PRINTED COPIES ARE UNCONTROLLED

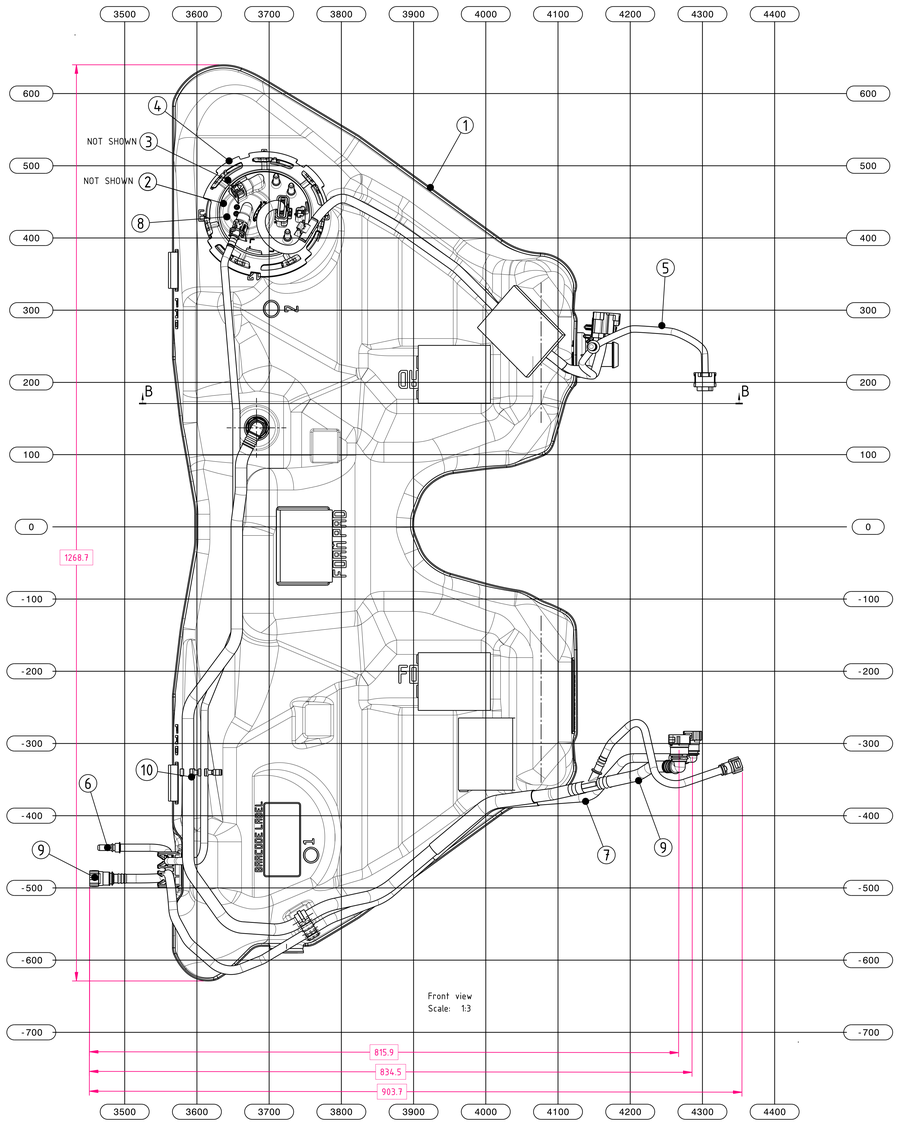

Front view
Scale: 1:3

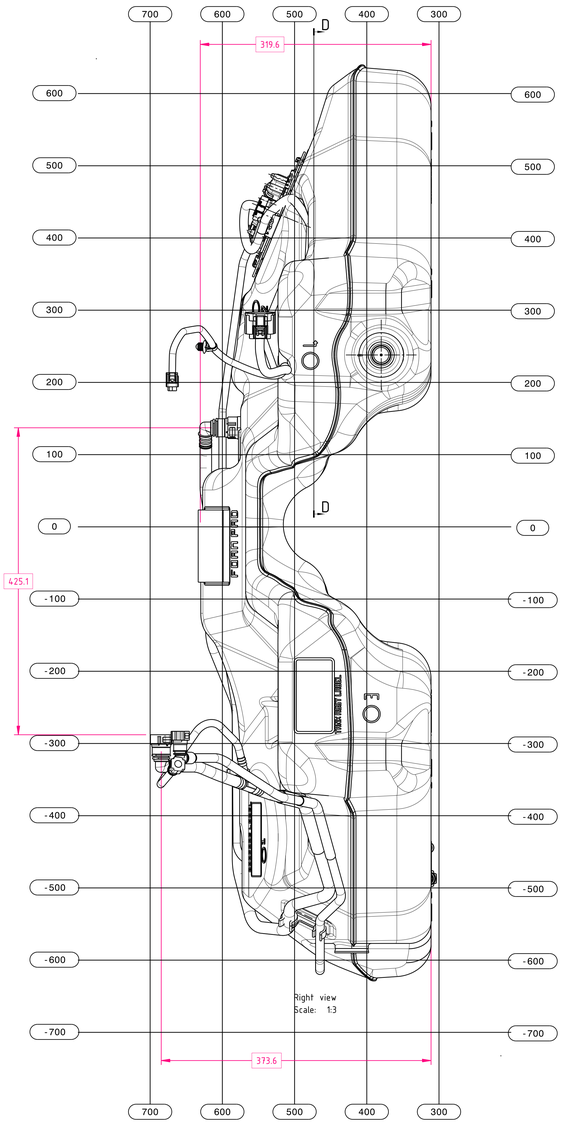

Right view
Scale: 1:3

		ITEM	PART NUMBER	DESCRIPTION	QUANTITY
J1	H1 G1 F1 D1	1	9X23-9002-AH	TNK ASY FUL	1
		2	9X23-9H307-AD	SDR & PMP ASY-FU/TNK	1
		3	6H52-9276-AA	GSKT-FU/TNK SDR	1
		4	9X23-9C385-AA	RG-FU/PMP RET LK	1
	H2 E1	5	9X23-14407-AC	HARNESS (PETROL)	1
		6	9X23-9327-AB	HOS ASY FUL TUB RR	1
		7	9X23-9A186-AB	PIP-FU/TNK VEN RR LH	1
	H3 F2	8	9X23-9A309-AD	FLNG FU/TNK SDR & OLET TUB MTNG	1
	C1	9	9X23-9C047-AC	TUB ASY FU/VPR CONTR VLV	1
		10	9X23-9S305-AA	CLP-FU/VPR TUB	1

DIMENSION		TOLERANCE
OVER	UPTO	+/-
0	127	2
127.1	254	3
254.1	508	4
508.1	OVER	5

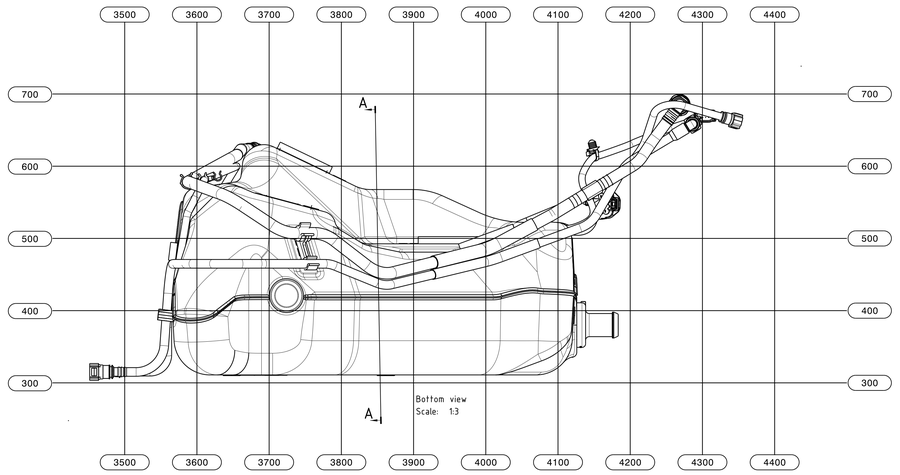

Bottom view
Scale: 1:3

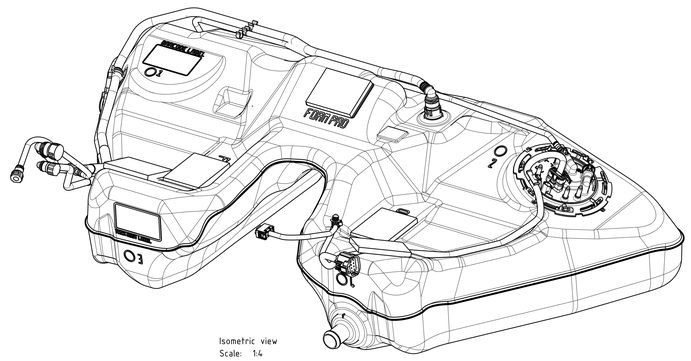

Isometric view
Scale: 1:4

LTRS	REVISIONS		
ORIGINATOR	CHECKER	ENGR APP	MATL APP
RELEASE OF 9X23-9K007-AA UEP2 I 11987659 000 20070406			
NMANDER	AWHITEMA	PGRAY18	MATS ENG
RELEASE OF 9X23-9K007-AC SUFFIX AB USED FOR 'T' RELEASE ONLY. NO DRAWING RELEASED C1. SUPPLEMENT K WAS CUSTOMER CRT C2. DVP SPECIFICATION NOTE ADDED C3. WEIGHTS & CAPACTIES UPDATED C4. TANK STOWAGE NOTE ADDED C5. CONNECTIONS NOTE MODIFIED C6. SERVICE NOTE UPDATED C7. PARTS TABLE UPDATED C8. INTERNAL CONNECTION TABLE UPDATED C9. LABEL DETAIL ADDED C10. RESISTANCE VALUES ADDED UEP2 E 12048779 001 20080130			
NMANDER	AWHITEMA	PGRAY18	MATS ENG
RELEASE OF 9X23-9K007-AD D1 ITEM 1 WAS 9X23-9002-AC UEP2 E 12084434 000 20080213			
NMANDER	AWHITEMA	PGRAY18	MATS ENG
RELEASE OF 9X23-9K007-AE E1 PART NUMBER UPDATES E2 SENDER READING UPDATE E3 SC'S & CC'S ADDED UEP2 E 12132335 001 20080620			
NMANDER	AWHITEMA	PGRAY18	MATS ENG
RELEASE OF 9X23-9K007-AF F1 FDM NUMBER UPDATE F2 FUEL TANK FLANGE NUMBER UPDATE F3 UPDATE TO 9X23-9002-AE DWG UEP2 E 12153716 001 20080905			
NMANDER	AWHITEMA	PGRAY18	MATS ENG
CAD REVISION OF 9X23-9K007-AF F4 ADDITION OF CCC NOTES F5 NOTE UPDATES UEP2 E 12181432 000 20081104			
NMANDER	AWHITEMA	PGRAY18	MATS ENG
CAD RELEASE OF 9X23-9K007-AG G1 TNK ASY FUL PART NO CHANGE UEP2 E 12201658 000 20090121			
NMANDER	AWHITEMA	PGRAY18	MATS ENG
RELEASE OF 9X23-9K007-AH H1 ITEM 1 WAS 9X23-9002-AF H2 ITEM 5 9X23-14407-AB H3 ITEM 8 WAS 9X23-9A309-AC UEP2 E 12240282 000 20090602			
NMANDER	AWHITEMA	PGRAY18	MATS ENG
RELEASE OF 9X23-9K007-AJ J1 ITEM 1 WAS 9X23-9002-AG UEP2 E 50004808 000 20101001			
KSENTHI7	CMITCH11	KWILKIN6	MATS ENG

REFERENCE DS-J_X250-100100-C810_18-10

PART MUST COMPLY WITH RESTRICTED SUBSTANCE MANAGEMENT STANDARD WSS-M99P9999-A1 TO SAFEGUARD HEALTH, SAFETY AND THE ENVIRONMENT

DRAFTED IN ACCORDANCE WITH FORD MOTOR COMPANY ENGINEERING CAD AND DRAFTING STANDARDS VERSION 17.0

3RD ANGLE PROJ
DIMENSIONS ARE IN MILLIMETERS

CAD TYPE	CAD LOC.	CAD FILE	DTMC
K-CATIA5	TCE	FDR9X239K007A20 ;12	IS MASTER
OPER. NO.	UNIT	DRAWING	
GBIELBY	N/A	9X23-9K007-AJ	
DESIGN	DETAIL	TITLE	SHT 2
GBIELBY	GBIELBY	TNK & SDR ASY FUL	OF 3
CHECKED	SAFETY		
AWHITEMA	N/A		
SCALE	DATE	DIVISION JAGUAR	
1:1	20070221	PLANT GAYDON	

FEDERAL FUEL TANK TOP LEVEL ASSY

PRINTED COPIES ARE UNCONTROLLED

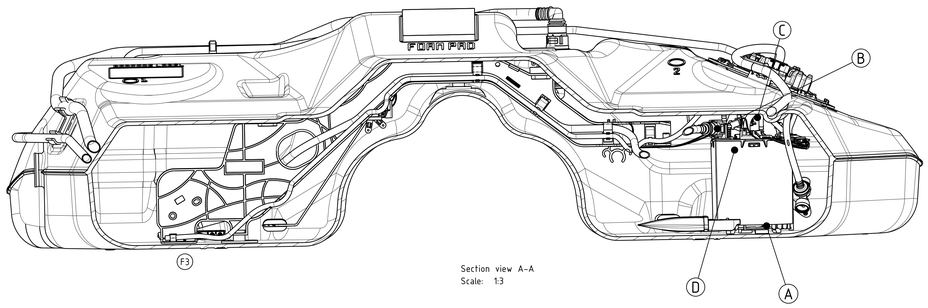

Section view A-A
Scale: 1:3

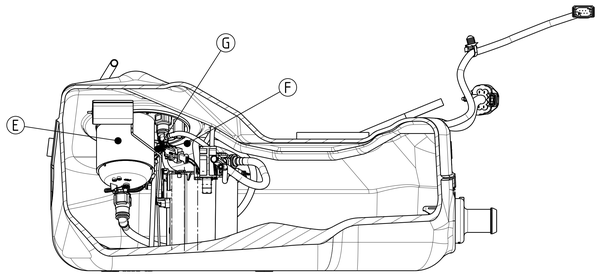

Section view B-B
Scale: 1:3

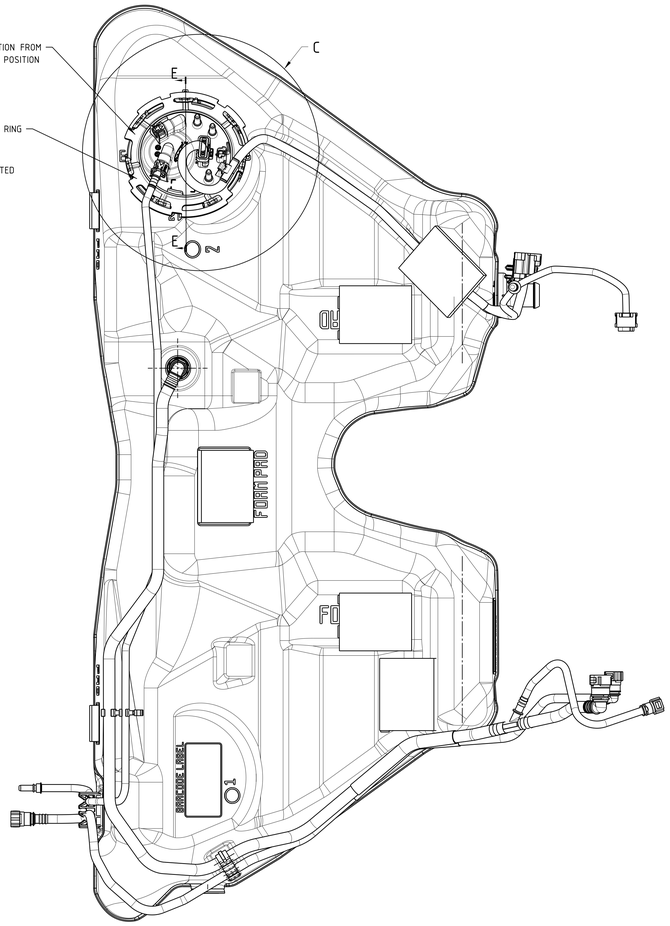

Front view
Scale: 1:3

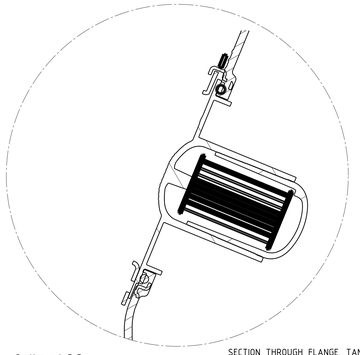

Section cut E-E
Scale: 2:3

SECTION THROUGH FLANGE, TANK, SEAL, ENCAPSULATED RING AND LOCKING RING.

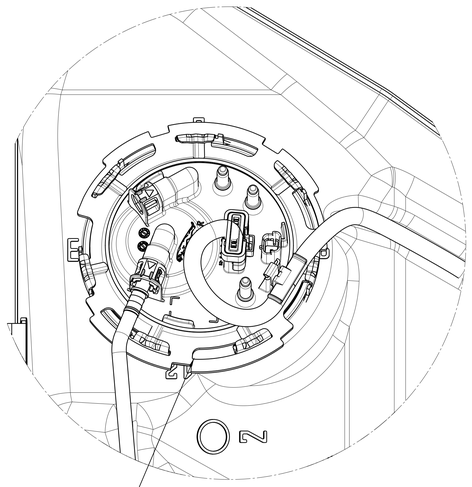

Detail C
Scale: 2:3

* FLANGE TAB TO BE LOCATED IN THIS ORIENTATION

ITEMS 4,5,6 AND 7 ARE OMITTED FOR CLARITY

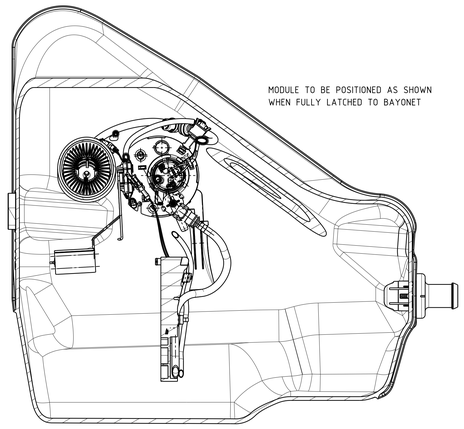

Section view D-D
Scale: 1:3

C8

TANK INTERNAL CONNECTIONS

	ITEM No	CONNECTION DESCRIPTION
*	A	SDR & PMP ASY PETROL TO BAYONET
*	B	VPR & BRKT ASY-FUL VENTURI TO SDR & PMP ASY
*	C	SDR & PMP ASY ELECTRICAL CONNECTOR TO VPR & BRKT ASY-FUL ELECTICAL CONNECTOR
▽	D	SDR & PMP FEED LINE CONNECTION TO FLNG FU/TNK SDR & OLET TUB MTNG
*	E	VPR & BRKT ASY-FUL DRAIN TUBE TO SDR & PMP ASY FLANGE
*	F	SDR & PMP ASY EARTH ELECTRICAL CONNECTOR TO SDR & PMP ASY FLANGE
*	G	SDR & PMP ASY ELECTRICAL CONNECTOR TO SDR & PMP ASY FLANGE

LTRS	REVISIONS		
ORIGINATOR	CHECKER	ENGR APP	MATL APP
RELEASE OF 9X23-9K007-AA UEP2 I 11987659 000 20070406			
NMANDER	AWHITEMA	PGRAY18	MATS ENG
RELEASE OF 9X23-9K007-AC SUFFIX AB USED FOR 'T' RELEASE ONLY. NO DRAWING RELEASED C1. SUPPLEMENT K WAS CUSTOMER CRT C2. DVP SPECIFICATION NOTE ADDED C3. WEIGHTS & CAPACTIES UPDATED C4. TANK STOWAGE NOTE ADDED C5. CONNECTIONS NOTE MODIFIED C6. SERVICE NOTE UPDATED C7. PARTS TABLE UPDATED C8. INTERNAL CONNECTION TABLE UPDATED C9. LABEL DETAIL ADDED C10. RESISTANCE VALUES ADDED UEP2 E 12048779 001 20080130			
NMANDER	AWHITEMA	PGRAY18	MATS ENG
RELEASE OF 9X23-9K007-AD D1 ITEM 1 WAS 9X23-9002-AC UEP2 E 12084434 000 20080213			
NMANDER	AWHITEMA	PGRAY18	MATS ENG
RELEASE OF 9X23-9K007-AE E1 PART NUMBER UPDATES E2 SENDER READING UPDATE E3 SC'S & CC'S ADDED UEP2 E 12132335 001 20080620			
NMANDER	AWHITEMA	PGRAY18	MATS ENG
RELEASE OF 9X23-9K007-AF F1 FDM NUMBER UPDATE F2 FUEL TANK FLANGE NUMBER UPDATE F3 UPDATE TO 9X23-9002-AE UEP2 E 12153716 001 20080905			
NMANDER	AWHITEMA	PGRAY18	MATS ENG
CAD REVISION OF 9X23-9K007-AF F4 ADDITION OF CCC NOTES F5 NOTE UPDATES UEP2 E 12181432 000 20081104			
NMANDER	AWHITEMA	PGRAY18	MATS ENG
CAD RELEASE OF 9X23-9K007-AG G1 TNK ASY FUL PART NO CHANGE UEP2 E 12201658 000 20090121			
NMANDER	AWHITEMA	PGRAY18	MATS ENG
RELEASE OF 9X23-9K007-AH H1 ITEM 1 WAS 9X23-9002-AF H2 ITEM 5 9X23-14407-AB H3 ITEM 8 WAS 9X23-9A309-AC UEP2 E 12240282 000 20090602			
NMANDER	AWHITEMA	PGRAY18	MATS ENG
RELEASE OF 9X23-9K007-AJ J1 ITEM 1 WAS 9X23-9002-AG UEP2 E 50004808 000 20101001			
KSENTHI7	CMITCH11	KWILKIN6	MATS ENG

REFERENCE		DS-J_X250-100100-C810_18-10	
PART MUST COMPLY WITH RESTRICTED SUBSTANCE MANAGEMENT STANDARD WSS-M99P9999-A1 TO SAFEGUARD HEALTH, SAFETY AND THE ENVIRONMENT			
DRAFTED IN ACCORDANCE WITH FORD MOTOR COMPANY ENGINEERING CAD AND DRAFTING STANDARDS VERSION 17.0		3RD ANGLE PROJ DIMENSIONS ARE IN MILLIMETERS	
CAD TYPE K-CATIA5	CAD LOC. TCE	CAD FILE FDR9X239K007A20 ;12	DTMC IS MASTER
OPER. NO. GBIELBY	UNIT N/A	DRAWING 9X23-9K007-AJ	
DESIGN GBIELBY	DETAIL GBIELBY	TITLE TNK & SDR ASY FUL	SHT 3 OF 3
CHECKED AWHITEMA	SAFETY N/A		
SCALE 1:1	DATE 20070221	DIVISION JAGUAR PLANT GAYDON	

FEDERAL FUEL TANK TOP LEVEL ASSY

PRINTED COPIES ARE UNCONTROLLED

▽ THIS COMPONENT MUST COMPLY WITH THE REQUIREMENTS OF ENGINEERING SPECIFICATION ES 3U5A-9002-BB, EXCEPT FOR SECTION 3.6 CONTAMINATION WHERE NOTE BELOW APPLIES

TOTAL INTERNAL DEBRIS MUST NOT EXCEED 4.0 mg WHEN TESTED TO LRLTM 30.IC101 OR SIMILAR APPROVED METHOD
THE MAXIMUM PERMISSIBLE PARTICLE SIZE MUST NOT EXCEED 400 microns/0.6mg WHEN MEASURED IN ACCORDANCE WITH LRLTM 30.DD.103.

LOCKING RING SYSTEM TO MEET THE REQUIREMENTS OF SAE J2587.

COMPONENT TO BE MARKED IN LINE WITH FORD MOTOR COMPANY ENGINEERING CAD & DRAFTING STANDARD E-3 (BRANDING)
COMPONENT TO COMPLY WITH FORD MOTOR COMPANY ENGINEERING CAD & DRAFTING STANDARD E-4 (IDENTIFICATION OF POLYMERIC MATERIALS).

CB ▽ 100% LEAK TEST: PRESSURE DIFFERENTIAL TEST USING HELIUM. LEAK RATE TO BE LESS THAN 1.4 x 10 mbar l/s AT 140mb PRESSURE DIFFERENTIAL
AFTER LEAK TESTING NO PART TO BE REMOVED OR CHANGED WITHOUT RETESTING

▽ 100% FUEL PUMP MODULE AND SENDER UNIT AND TANK VALVE FUNCTIONALITY TESTS TO BE CARRIED OUT IN LINE WITH PROCESS CONTROL DOCUMENTS AGREED WITH JAGUAR / LAND ROVER PRODUCT ENGINEERING AT STA DEPARTMENTS

▽ PUMP START TEST - MEDIUM AIR, VOLTAGE 6±0.1V,
MEASURING TIME 1<t<5 SECS,
CURRENT <4A, MAX 2 TESTS.

▽ SENDER UNIT(S) ROLL OVER TEST TO CONFIRM -
SENDER FLOAT POSITION EMPTY RESISTANCE VALUE WITHIN TOLERANCE: 51.2 ±1 OHMS
SENDER FLOAT POSITION FULL RESISTANCE VALUE WITHIN TOLERANCE: 992.2 ±10.5 OHMS
SENDER FLOAT POSITION BACK TO EMPTY RESISTANCE VALUE WITHIN TOLERANCE: 51.2 ±1 OHMS

CB FOR ELECTRICAL CONNECTOR PIN OUT INFORMATION REFER TO DRAWING AH22-9039-AB LATEST ISSUE.

▽ 100% TANK VENT SYSTEM - VACUUM TEST
ROLL TANK OVER 180° FROM NORMAL VEHICLE FITTED POSITION,
APPLY A VACUUM OF AT LEAST - 150mb.
APPLY THE VACUUM TO LARGE BORE BREATHER.
EVACUATION TIME 5 SECS MINIMUM
STABILISATION TIME 10 SECS MINIMUM
LEAK CHECK FOR 20 SECS MINIMUM
LEAK RATE TO BE <50 ccm
RELEASE VACUUM, ROLL BACK TO NORMAL VEHICLE FITTED POSITION

D1 CB FULL TRACEABILITY TO BE INDELIBLY MARKED / LABELLED ON THIS ASSEMBLY WITH REGARD TO DAY, MONTH, YEAR, TIME, AND PART NUMBER

NO LUBRICANT TO BE USED DURING MANUFACTURE, TO ASSEMBLE COMPONENT OR PARTS OR ASSEMBLY TO VEHICLE WITHOUT PRIOR AGREEMENT AND AUTHORISATION FROM JAGUAR / LAND ROVER MATERIALS AND FUEL SYSTEMS ENGINEERING DEPARTMENTS

D2 ▽ ITEM 6 -TIGHTEN TO 4.5Nm ± 0.5Nm
▽ ITEM 10 -TIGHTEN TO 3.5Nm ± 0.5Nm MAXIMUM TIGHTENING SPEED 350RPM
▽ ITEM 15 -TIGHTEN CAM LOCK TO CLOSURE STOP, TORQUE TO ACHIEVE THIS 250Nm±20Nm
ANGULAR ROTATION START + FINISH TO BE MONITERED DURING ASSEMBLY.

AS SUPPLIED TO JAGUAR / LAND ROVER COMPONENT MUST BE FREE INTERNALLY FROM THE FOLLOWING:-
CB - ALL MANUFACTURING AND PROCESS TEST FLUIDS
- ALL IN PROCESS PRESSURE TEST FLUIDS

CB ▽ BREATHER STUB INTERNAL CONNECTION TO BE VERIFIED BY A 100% PUSH OFF TEST.

CB EMPTY TO DESIGN CUT OFF = 87.1 litres (SEE FU-1047)

CB USEABLE CAPACITY = 86.3 litres (4.0 litres UNUSABLE INCLUDING RUNDRY)

FUEL FEED LINE TO BE CAPPED DURING ASSEMBLY, TRANSPORT AND STORAGE. CAP(S) MUST PROTECT ANY SEALING SURFACES AND MUST REMAIN EFFECTIVE FOR PROLONGED STORAGE.
CAP(S) MUST EASILY BE REMOVED WITHOUT THE USE OF TOOLS, IT MUST NOT BE POSSIBLE TO FIT ASSEMBLY TO MATING COMPONENTS WITH CAP(S) STILL IN PLACE

COMPONENTS TO BE STOWED, PALLETISED, TRANSPORTED, AND STORED SUCH THAT NO INTERNAL OR EXTERNAL DAMAGE CAN OCCUR TO THE ASSEMBLY

CB REFER TO FUEL TANK ASSEMBLY STOWAGE POSITION DOCUMENT FOR DELIVERED CONDITION TO SOLIHULL ASSEMBLY PLANT

ASSEMBLY TO BE FREE FROM FLASH, BURRS, SHARP EDGES AND ANY OTHER IMPERFECTIONS THAT MAY CAUSE INJURY DURING HANDLING OR THAT WOULD BE DETRIMENTAL TO ITS ASSEMBLY OR PERFORMANCE.

CHANGES AFFECTING DESIGN, COMPOSITION, OR PROCESSING OF THE ASSEMBLY OR SUB COMPONENTS PREVIOUSLY APPROVED FOR PRODUCTION REQUIRE PRIOR APPROVAL FROM JAGUAR / LAND ROVER PRODUCT ENGINEERING. REFER TO QS-9000

CB FOR CURRENT RELEASE STATUS SEE THE WERS ENGINEERING NOTICE.

ALL SEALING SURFACES TO BE CLEAN AND FREE FROM ANY SURFACE IMPERFECTIONS (INCLUDING) HOLES, SPOTS, DENTS, FLASH AND OFFSET MOULDING LINES)

AFTER ASSEMBLY ALL HOSES . PIPES TO BE FREE FROM KINKS.

DO NOT USE HOSES / PIPES ATTACHED TO THIS ASSEMBLY TO REMOVE FROM STILLAGE OR CARRY COMPONENT.

ALL PROTECTIVE CAPS TO BE REMOVED PRIOR TO ASSEMBLY OF COMPONENT TO VEHICLE.

SERVICE NOTE:
IF ITEM 13 FLNG FU/TNK IS REMOVED OR DISTURBED IN SERVICE A NEW GSKT-FU/TNK SDR, ITEM 14, MUST BE USED.

▽ CONTROL ITEM - THE ▽ ALSO IDENTIFIES CRITICAL CHARACTERISTICS DESIGNATED BY THE CROSS FUNCTIONAL TEAMS DEVELOPING THE PRODUCT. THESE AND ADDITIONAL CRITICAL CHARACTERISTICS IDENTIFIED BY PROCESS REVIEWS MUST APPEAR ON THE CONTROL PLANS ACCORDING TO QS-9000. THESE CONTROL PLANS REQUIRE PRODUCT ENGINEERING APPROVAL.

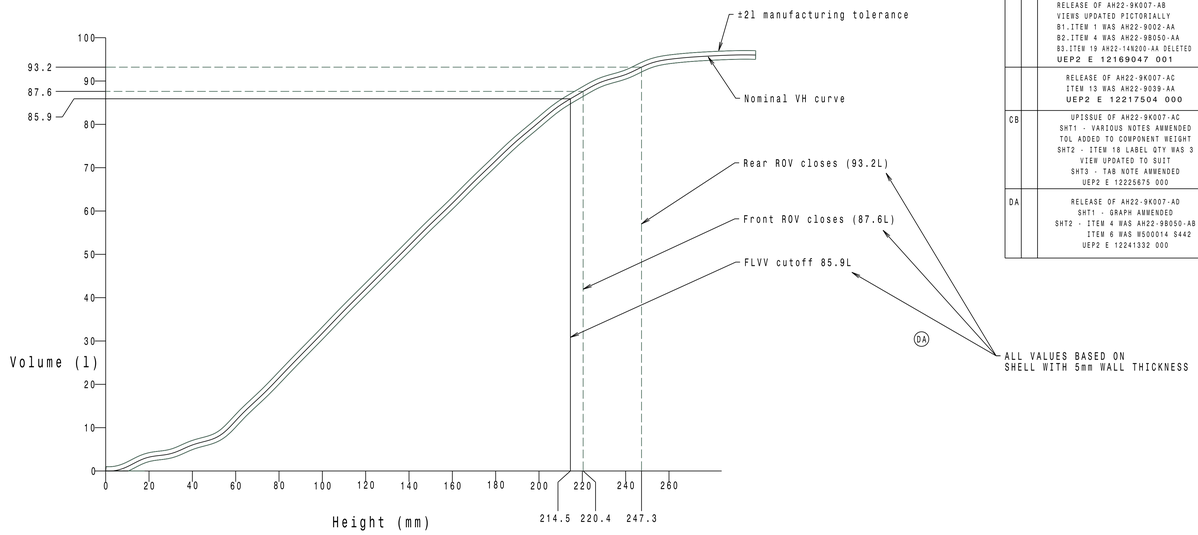

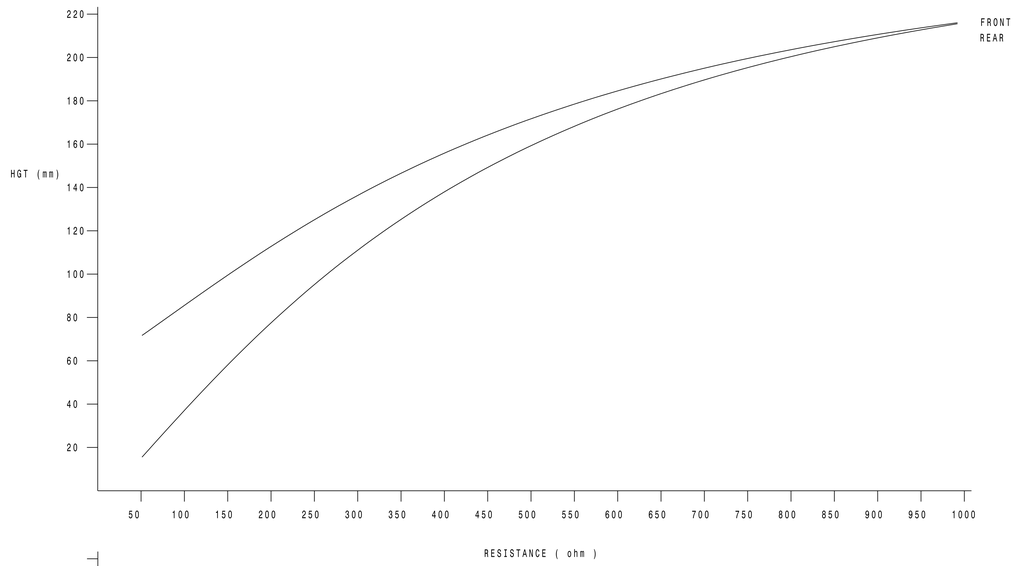

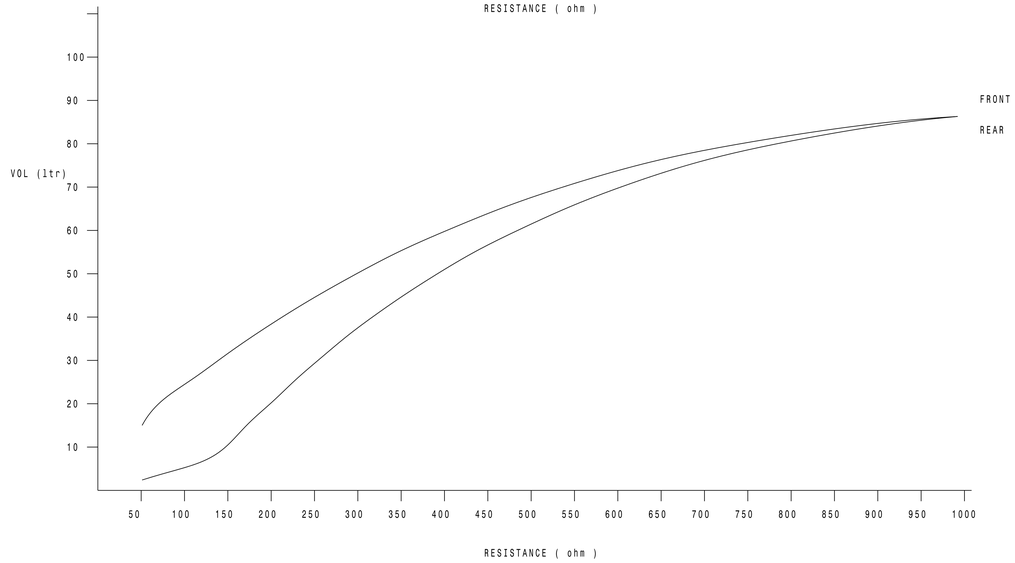

ORIGINAL LANDROVER MOD COLUMN			
		RELEASE OF AH22-9K007-AA UEP2 I 12097391 000	GPARKE35 20080307
		RELEASE OF AH22-9K007-AB VIEWS UPDATED PICTORIALLY B1.ITEM 1 WAS AH22-9002-AA B2.ITEM 4 WAS AH22-9B050-AA B3.ITEM 19 AH22-14N200-AA DELETED UEP2 E 12169047 001	GPARKE35 20081001
		RELEASE OF AH22-9K007-AC ITEM 13 WAS AH22-9039-AA UEP2 E 12217504 000	pmorga65 20090312
CB		UPISSUE OF AH22-9K007-AC SHT1 - VARIOUS NOTES AMMENDED TOL ADDED TO COMPONENT WEIGHT SHT2 - ITEM 18 LABEL QTY WAS 3 VIEW UPDATED TO SUIT SHT3 - TAB NOTE AMMENDED UEP2 E 12225675 000	pmorga65 20090427
DA		RELEASE OF AH22-9K007-AD SHT1 - GRAPH AMMENDED SHT2 - ITEM 4 WAS AH22-9B050-AB ITEM 6 WAS M500014 S442 UEP2 E 12241332 000	pmorga65 20090607

LTRS	REVISIONS			
ORIGINATOR	CHECKER	ENGR APP	MATL APP	
CAD FILE REMASTERED AND REDRAWN IN CATIA V5, AFTER LANDROVER ISSUE D REVISION OF AH22-9K007-AD D1 - TRACEABILITY NOTE AMENDED D2 - ITEM 6 TORQUE WAS 3.5Nm UEP2 E 12290904 000 20091113				
PMORGA65	SCHECKLE	KWILKIN6	MATSENG	
RELEASE OF AH22-9K007-AE SEE SHEET 2 E1 - ITEM 13 WAS AH22-9039-AB UEP2 E 50000292 000 20100823				
PMORGA65	SCHECKLE	KWILKIN6	MATSENG	
RELEASE OF AH22-9K007-AF SEE SHEET2 ITEM 12 WAS AH22-9H307-AA ITEM 13 WAS AH22-9039-AC ITEM 16 WAS AH22-9066-AA UEP2 E 50019529 000 20110913				
HJAYARAM	PREDHEAD	PWADSWOR	MATSENG	

REFERENCE	DS-L319-100100-C810_02-10		
PART MUST COMPLY WITH RESTRICTED SUBSTANCE MANAGEMENT STANDARD WSS-M99P9999-A1 TO SAFEGUARD HEALTH, SAFETY AND THE ENVIRONMENT			
DRAFTED IN ACCORDANCE WITH FORD MOTOR COMPANY ENGINEERING CAD AND DRAFTING STANDARDS VERSION_23		3RD ANGLE PROJ DIMENSIONS ARE IN MILLIMETERS	
CAD TYPE K-CATIA5	CAD LOC. TC	CAD FILE AH22-9K007-A-DWG-01 . 4	DTMC IS MASTER
OPER. NO. N/A	UNIT N/A	DRAWING AH22-9K007-AF	
DESIGN PREDHEAD	DETAIL HJAYARAM	TITLE TNK + SDR ASY FUL (PETROL)	SHT 1 OF 3
CHECKED PREDHEAD	SAFETY N/A		
SCALE 1:1	DATE 20110913	DIVISION JAGUAR LANDROVER PLANT GAYDON	
JAGUAR CARS LIMITED		LAND ROVER	

CB

PRINTED COPIES ARE UNCONTROLLED

▽ THIS COMPONENT MUST COMPLY WITH THE REQUIREMENTS OF ENGINEERING SPECIFICATION ES 3U5A-9002-BB, EXCEPT FOR SECTION 3.6 CONTAMINATION WHERE NOTE BELOW APPLIES

TOTAL INTERNAL DEBRIS MUST NOT EXCEED 4.0 mg WHEN TESTED TO LRLTM 30.IC101 OR SIMILAR APPROVED METHOD
THE MAXIMUM PERMISSIBLE PARTICLE SIZE MUST NOT EXCEED 400 microns/0.6mg WHEN MEASURED IN ACCORDANCE WITH LRLTM 30.DD.103.

LOCKING RING SYSTEM TO MEET THE REQUIREMENTS OF SAE J2587.

COMPONENT TO BE MARKED IN LINE WITH FORD MOTOR COMPANY ENGINEERING CAD & DRAFTING STANDARD E-3 (BRANDING)
COMPONENT TO COMPLY WITH FORD MOTOR COMPANY ENGINEERING CAD & DRAFTING STANDARD E-4 (IDENTIFICATION OF POLYMERIC MATERIALS).

CB ▽ 100% LEAK TEST: PRESSURE DIFFERENTIAL TEST USING HELIUM. LEAK RATE TO BE LESS THAN 1.4 x 10 mbar l/s AT 140mb PRESSURE DIFFERENTIAL
AFTER LEAK TESTING NO PART TO BE REMOVED OR CHANGED WITHOUT RETESTING

▽ 100% FUEL PUMP MODULE AND SENDER UNIT AND TANK VALVE FUNCTIONALITY TESTS TO BE CARRIED OUT IN LINE WITH PROCESS CONTROL DOCUMENTS AGREED WITH JAGUAR / LAND ROVER PRODUCT ENGINEERING AT STA DEPARTMENTS

▽ PUMP START TEST - MEDIUM AIR, VOLTAGE 6±0.1V,
MEASURING TIME 1<t<5 SECS,
CURRENT <4A, MAX 2 TESTS.

▽ SENDER UNIT(S) ROLL OVER TEST TO CONFIRM -
SENDER FLOAT POSITION EMPTY RESISTANCE VALUE WITHIN TOLERANCE: 51.2 ±1 OHMS
SENDER FLOAT POSITION FULL RESISTANCE VALUE WITHIN TOLERANCE: 992.2 ±10.5 OHMS
SENDER FLOAT POSITION BACK TO EMPTY RESISTANCE VALUE WITHIN TOLERANCE: 51.2 ±1 OHMS

CB FOR ELECTRICAL CONNECTOR PIN OUT INFORMATION REFER TO DRAWING AH22-9039-AB LATEST ISSUE.

▽ 100% TANK VENT SYSTEM - VACUUM TEST
ROLL TANK OVER 180° FROM NORMAL VEHICLE FITTED POSITION,
APPLY A VACUUM OF AT LEAST - 150mb.
APPLY THE VACUUM TO LARGE BORE BREATHER.
EVACUATION TIME 5 SECS MINIMUM
STABILISATION TIME 10 SECS MINIMUM
LEAK CHECK FOR 20 SECS MINIMUM
LEAK RATE TO BE <50 ccm
RELEASE VACUUM, ROLL BACK TO NORMAL VEHICLE FITTED POSITION

D1 CB FULL TRACEABILITY TO BE INDELIBLY MARKED / LABELLED ON THIS ASSEMBLY WITH REGARD TO DAY, MONTH, YEAR, TIME, AND PART NUMBER

NO LUBRICANT TO BE USED DURING MANUFACTURE, TO ASSEMBLE COMPONENT OR PARTS OR ASSEMBLY TO VEHICLE WITHOUT PRIOR AGREEMENT AND AUTHORISATION FROM JAGUAR / LAND ROVER MATERIALS AND FUEL SYSTEMS ENGINEERING DEPARTMENTS

D2 ▽ ITEM 6 -TIGHTEN TO 4.5Nm ± 0.5Nm
▽ ITEM 10 -TIGHTEN TO 3.5Nm ± 0.5Nm MAXIMUM TIGHTENING SPEED 350RPM
▽ ITEM 15 -TIGHTEN CAM LOCK TO CLOSURE STOP, TORQUE TO ACHIEVE THIS 250Nm±20Nm
ANGULAR ROTATION START + FINISH TO BE MONITERED DURING ASSEMBLY.

AS SUPPLIED TO JAGUAR / LAND ROVER COMPONENT MUST BE FREE INTERNALLY FROM THE FOLLOWING:-
CB - ALL MANUFACTURING AND PROCESS TEST FLUIDS
- ALL IN PROCESS PRESSURE TEST FLUIDS

CB ▽ BREATHER STUB INTERNAL CONNECTION TO BE VERIFIED BY A 100% PUSH OFF TEST.

CB EMPTY TO DESIGN CUT OFF = 87.1 litres (SEE FU-1047)

CB USEABLE CAPACITY = 86.3 litres (4.0 litres UNUSABLE INCLUDING RUNDRY)

FUEL FEED LINE TO BE CAPPED DURING ASSEMBLY, TRANSPORT AND STORAGE. CAP(S) MUST PROTECT ANY SEALING SURFACES AND MUST REMAIN EFFECTIVE FOR PROLONGED STORAGE.
CAP(S) MUST EASILY BE REMOVED WITHOUT THE USE OF TOOLS, IT MUST NOT BE POSSIBLE TO FIT ASSEMBLY TO MATING COMPONENTS WITH CAP(S) STILL IN PLACE

COMPONENTS TO BE STOWED, PALLETISED, TRANSPORTED, AND STORED SUCH THAT NO INTERNAL OR EXTERNAL DAMAGE CAN OCCUR TO THE ASSEMBLY

CB REFER TO FUEL TANK ASSEMBLY STOWAGE POSITION DOCUMENT FOR DELIVERED CONDITION TO SOLIHULL ASSEMBLY PLANT

ASSEMBLY TO BE FREE FROM FLASH, BURRS, SHARP EDGES AND ANY OTHER IMPERFECTIONS THAT MAY CAUSE INJURY DURING HANDLING OR THAT WOULD BE DETRIMENTAL TO ITS ASSEMBLY OR PERFORMANCE.

CHANGES AFFECTING DESIGN, COMPOSITION, OR PROCESSING OF THE ASSEMBLY OR SUB COMPONENTS PREVIOUSLY APPROVED FOR PRODUCTION REQUIRE PRIOR APPROVAL FROM JAGUAR / LAND ROVER PRODUCT ENGINEERING. REFER TO QS-9000

CB FOR CURRENT RELEASE STATUS SEE THE WERS ENGINEERING NOTICE.

ALL SEALING SURFACES TO BE CLEAN AND FREE FROM ANY SURFACE IMPERFECTIONS (INCLUDING) HOLES, SPOTS, DENTS, FLASH AND OFFSET MOULDING LINES)

AFTER ASSEMBLY ALL HOSES . PIPES TO BE FREE FROM KINKS.

DO NOT USE HOSES / PIPES ATTACHED TO THIS ASSEMBLY TO REMOVE FROM STILLAGE OR CARRY COMPONENT.

ALL PROTECTIVE CAPS TO BE REMOVED PRIOR TO ASSEMBLY OF COMPONENT TO VEHICLE.

SERVICE NOTE:
IF ITEM 13 FLNG FU/TNK IS REMOVED OR DISTURBED IN SERVICE A NEW GSKT-FU/TNK SDR, ITEM 14, MUST BE USED.

▽ CONTROL ITEM - THE ▽ ALSO IDENTIFIES CRITICAL CHARACTERISTICS DESIGNATED BY THE CROSS FUNCTIONAL TEAMS DEVELOPING THE PRODUCT. THESE AND ADDITIONAL CRITICAL CHARACTERISTICS IDENTIFIED BY PROCESS REVIEWS MUST APPEAR ON THE CONTROL PLANS ACCORDING TO QS-9000. THESE CONTROL PLANS REQUIRE PRODUCT ENGINEERING APPROVAL.

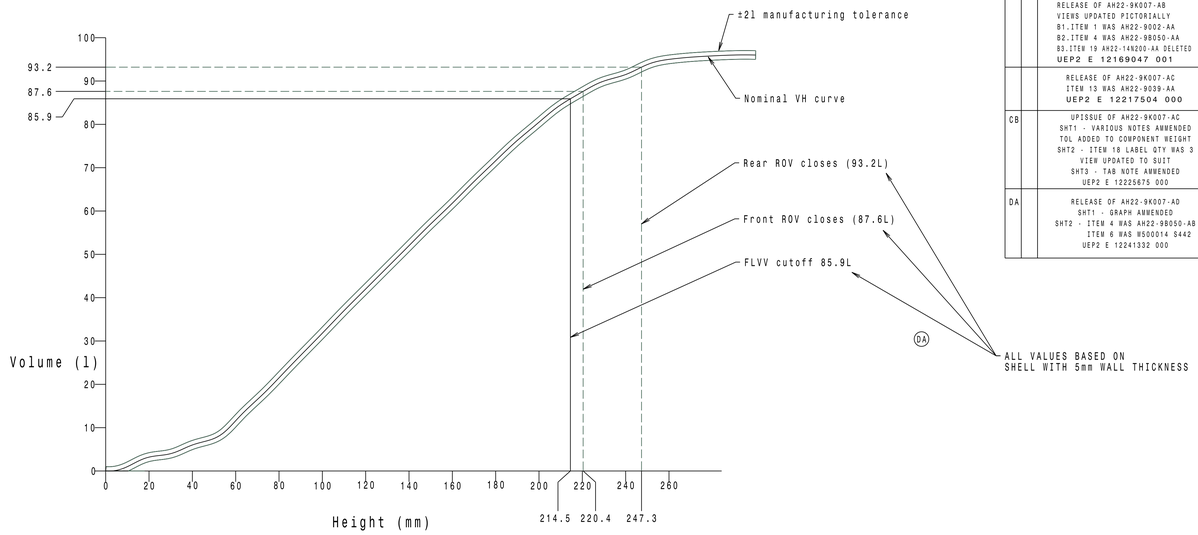

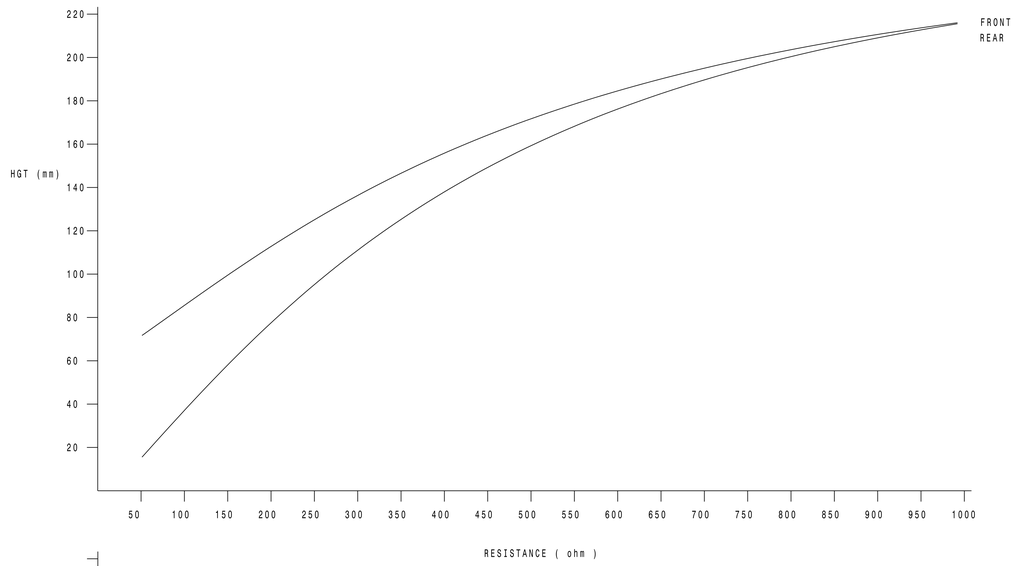

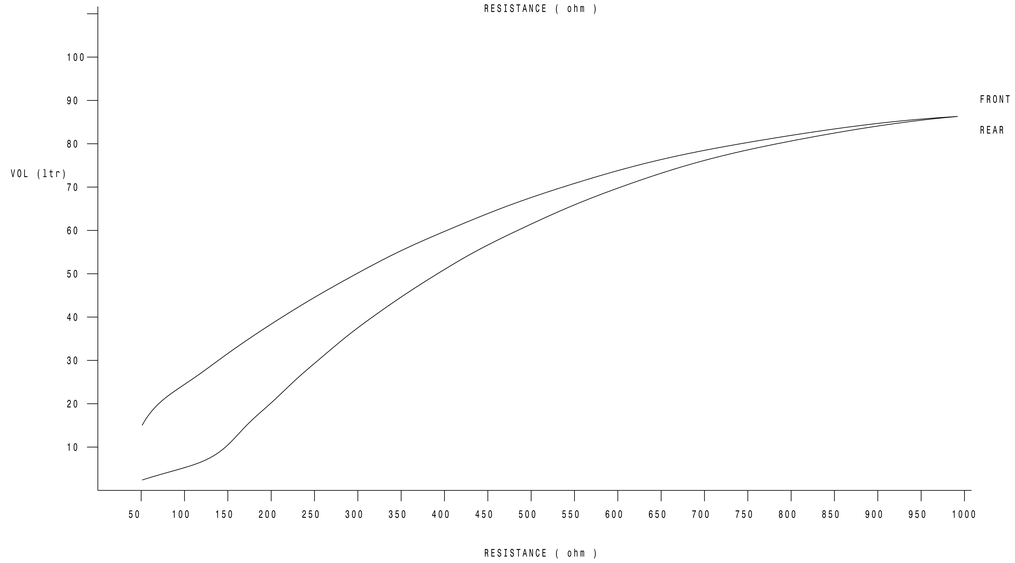

ORIGINAL LANDROVER MOD COLUMN			
		RELEASE OF AH22-9K007-AA UEP2 I 12097391 000	GPARKE35 20080307
		RELEASE OF AH22-9K007-AB VIEWS UPDATED PICTORIALLY B1.ITEM 1 WAS AH22-9002-AA B2.ITEM 4 WAS AH22-9B050-AA B3.ITEM 19 AH22-14N200-AA DELETED UEP2 E 12169047 001	GPARKE35 20081001
		RELEASE OF AH22-9K007-AC ITEM 13 WAS AH22-9039-AA UEP2 E 12217504 000	pmorga65 20090312
CB		UPISSUE OF AH22-9K007-AC SHT1 - VARIOUS NOTES AMMENDED TOL ADDED TO COMPONENT WEIGHT SHT2 - ITEM 18 LABEL QTY WAS 3 VIEW UPDATED TO SUIT SHT3 - TAB NOTE AMMENDED UEP2 E 12225675 000	pmorga65 20090427
DA		RELEASE OF AH22-9K007-AD SHT1 - GRAPH AMMENDED SHT2 - ITEM 4 WAS AH22-9B050-AB ITEM 6 WAS M500014 S442 UEP2 E 12241332 000	pmorga65 20090607

LTRS	REVISIONS			
ORIGINATOR	CHECKER	ENGR APP	MATL APP	
CAD FILE REMASTERED AND REDRAWN IN CATIA V5, AFTER LANDROVER ISSUE D REVISION OF AH22-9K007-AD D1 - TRACEABILITY NOTE AMENDED D2 - ITEM 6 TORQUE WAS 3.5Nm UEP2 E 12290904 000 20091113				
PMORGA65	SCHECKLE	KWILKIN6	MATSENG	
RELEASE OF AH22-9K007-AE SEE SHEET 2 E1 - ITEM 13 WAS AH22-9039-AB UEP2 E 50000292 000 20100823				
PMORGA65	SCHECKLE	KWILKIN6	MATSENG	
RELEASE OF AH22-9K007-AF SEE SHEET2 ITEM 12 WAS AH22-9H307-AA ITEM 13 WAS AH22-9039-AC ITEM 16 WAS AH22-9066-AA UEP2 E 50019529 000 20110913				
HJAYARAM	PREDHEAD	PWADSWOR	MATSENG	

REFERENCE	DS-L319-100100-C810_02-10		
PART MUST COMPLY WITH RESTRICTED SUBSTANCE MANAGEMENT STANDARD WSS-M99P9999-A1 TO SAFEGUARD HEALTH, SAFETY AND THE ENVIRONMENT			
DRAFTED IN ACCORDANCE WITH FORD MOTOR COMPANY ENGINEERING CAD AND DRAFTING STANDARDS VERSION_23		3RD ANGLE PROJ DIMENSIONS ARE IN MILLIMETERS	
CAD TYPE K-CATIA5	CAD LOC. TC	CAD FILE AH22-9K007-A-DWG-01 . 4	DTMC IS MASTER
OPER. NO. N/A	UNIT N/A	DRAWING AH22-9K007-AF	
DESIGN PREDHEAD	DETAIL HJAYARAM	TITLE TNK + SDR ASY FUL (PETROL)	SHT 1 OF 3
CHECKED PREDHEAD	SAFETY N/A		
SCALE 1:1	DATE 20110913	DIVISION JAGUAR LANDROVER PLANT GAYDON	
JAGUAR CARS LIMITED		LAND ROVER	

CB

PRINTED COPIES ARE UNCONTROLLED

▽ THIS COMPONENT MUST COMPLY WITH THE REQUIREMENTS OF ENGINEERING SPECIFICATION ES 3U5A-9002-BB, EXCEPT FOR SECTION 3.6 CONTAMINATION WHERE NOTE BELOW APPLIES

TOTAL INTERNAL DEBRIS MUST NOT EXCEED 4.0 mg WHEN TESTED TO LRLTM 30.IC101 OR SIMILAR APPROVED METHOD
THE MAXIMUM PERMISSIBLE PARTICLE SIZE MUST NOT EXCEED 400 microns/0.6mg WHEN MEASURED IN ACCORDANCE WITH LRLTM 30.DD.103.

LOCKING RING SYSTEM TO MEET THE REQUIREMENTS OF SAE J2587.

COMPONENT TO BE MARKED IN LINE WITH FORD MOTOR COMPANY ENGINEERING CAD & DRAFTING STANDARD E-3 (BRANDING)
COMPONENT TO COMPLY WITH FORD MOTOR COMPANY ENGINEERING CAD & DRAFTING STANDARD E-4 (IDENTIFICATION OF POLYMERIC MATERIALS).

CB ▽ 100% LEAK TEST: PRESSURE DIFFERENTIAL TEST USING HELIUM. LEAK RATE TO BE LESS THAN 1.4 x 10 mbar l/s AT 140mb PRESSURE DIFFERENTIAL
AFTER LEAK TESTING NO PART TO BE REMOVED OR CHANGED WITHOUT RETESTING

▽ 100% FUEL PUMP MODULE AND SENDER UNIT AND TANK VALVE FUNCTIONALITY TESTS TO BE CARRIED OUT IN LINE WITH PROCESS CONTROL DOCUMENTS AGREED WITH JAGUAR / LAND ROVER PRODUCT ENGINEERING AT STA DEPARTMENTS

▽ PUMP START TEST - MEDIUM AIR, VOLTAGE 6±0.1V,
MEASURING TIME 1<t<5 SECS,
CURRENT <4A, MAX 2 TESTS.

▽ SENDER UNIT(S) ROLL OVER TEST TO CONFIRM -
SENDER FLOAT POSITION EMPTY RESISTANCE VALUE WITHIN TOLERANCE: 51.2 ±1 OHMS
SENDER FLOAT POSITION FULL RESISTANCE VALUE WITHIN TOLERANCE: 992.2 ±10.5 OHMS
SENDER FLOAT POSITION BACK TO EMPTY RESISTANCE VALUE WITHIN TOLERANCE: 51.2 ±1 OHMS

CB FOR ELECTRICAL CONNECTOR PIN OUT INFORMATION REFER TO DRAWING AH22-9039-AB LATEST ISSUE.

▽ 100% TANK VENT SYSTEM - VACUUM TEST
ROLL TANK OVER 180° FROM NORMAL VEHICLE FITTED POSITION,
APPLY A VACUUM OF AT LEAST - 150mb.
APPLY THE VACUUM TO LARGE BORE BREATHER.
EVACUATION TIME 5 SECS MINIMUM
STABILISATION TIME 10 SECS MINIMUM
LEAK CHECK FOR 20 SECS MINIMUM
LEAK RATE TO BE <50 ccm
RELEASE VACUUM, ROLL BACK TO NORMAL VEHICLE FITTED POSITION

D1 CB FULL TRACEABILITY TO BE INDELIBLY MARKED / LABELLED ON THIS ASSEMBLY WITH REGARD TO DAY, MONTH, YEAR, TIME, AND PART NUMBER

NO LUBRICANT TO BE USED DURING MANUFACTURE, TO ASSEMBLE COMPONENT OR PARTS OR ASSEMBLY TO VEHICLE WITHOUT PRIOR AGREEMENT AND AUTHORISATION FROM JAGUAR / LAND ROVER MATERIALS AND FUEL SYSTEMS ENGINEERING DEPARTMENTS

D2 ▽ ITEM 6 -TIGHTEN TO 4.5Nm ± 0.5Nm
▽ ITEM 10 -TIGHTEN TO 3.5Nm ± 0.5Nm MAXIMUM TIGHTENING SPEED 350RPM
▽ ITEM 15 -TIGHTEN CAM LOCK TO CLOSURE STOP, TORQUE TO ACHIEVE THIS 250Nm±20Nm
ANGULAR ROTATION START + FINISH TO BE MONITERED DURING ASSEMBLY.

AS SUPPLIED TO JAGUAR / LAND ROVER COMPONENT MUST BE FREE INTERNALLY FROM THE FOLLOWING:-
CB - ALL MANUFACTURING AND PROCESS TEST FLUIDS
- ALL IN PROCESS PRESSURE TEST FLUIDS

CB ▽ BREATHER STUB INTERNAL CONNECTION TO BE VERIFIED BY A 100% PUSH OFF TEST.

CB EMPTY TO DESIGN CUT OFF = 87.1 litres (SEE FU-1047)

CB USEABLE CAPACITY = 86.3 litres (4.0 litres UNUSABLE INCLUDING RUNDRY)

FUEL FEED LINE TO BE CAPPED DURING ASSEMBLY, TRANSPORT AND STORAGE. CAP(S) MUST PROTECT ANY SEALING SURFACES AND MUST REMAIN EFFECTIVE FOR PROLONGED STORAGE.
CAP(S) MUST EASILY BE REMOVED WITHOUT THE USE OF TOOLS, IT MUST NOT BE POSSIBLE TO FIT ASSEMBLY TO MATING COMPONENTS WITH CAP(S) STILL IN PLACE

COMPONENTS TO BE STOWED, PALLETISED, TRANSPORTED, AND STORED SUCH THAT NO INTERNAL OR EXTERNAL DAMAGE CAN OCCUR TO THE ASSEMBLY

CB REFER TO FUEL TANK ASSEMBLY STOWAGE POSITION DOCUMENT FOR DELIVERED CONDITION TO SOLIHULL ASSEMBLY PLANT

ASSEMBLY TO BE FREE FROM FLASH, BURRS, SHARP EDGES AND ANY OTHER IMPERFECTIONS THAT MAY CAUSE INJURY DURING HANDLING OR THAT WOULD BE DETRIMENTAL TO ITS ASSEMBLY OR PERFORMANCE.

CHANGES AFFECTING DESIGN, COMPOSITION, OR PROCESSING OF THE ASSEMBLY OR SUB COMPONENTS PREVIOUSLY APPROVED FOR PRODUCTION REQUIRE PRIOR APPROVAL FROM JAGUAR / LAND ROVER PRODUCT ENGINEERING. REFER TO QS-9000

CB FOR CURRENT RELEASE STATUS SEE THE WERS ENGINEERING NOTICE.

ALL SEALING SURFACES TO BE CLEAN AND FREE FROM ANY SURFACE IMPERFECTIONS (INCLUDING) HOLES, SPOTS, DENTS, FLASH AND OFFSET MOULDING LINES)

AFTER ASSEMBLY ALL HOSES . PIPES TO BE FREE FROM KINKS.

DO NOT USE HOSES / PIPES ATTACHED TO THIS ASSEMBLY TO REMOVE FROM STILLAGE OR CARRY COMPONENT.

ALL PROTECTIVE CAPS TO BE REMOVED PRIOR TO ASSEMBLY OF COMPONENT TO VEHICLE.

SERVICE NOTE:
IF ITEM 13 FLNG FU/TNK IS REMOVED OR DISTURBED IN SERVICE A NEW GSKT-FU/TNK SDR, ITEM 14, MUST BE USED.

▽ CONTROL ITEM - THE ▽ ALSO IDENTIFIES CRITICAL CHARACTERISTICS DESIGNATED BY THE CROSS FUNCTIONAL TEAMS DEVELOPING THE PRODUCT. THESE AND ADDITIONAL CRITICAL CHARACTERISTICS IDENTIFIED BY PROCESS REVIEWS MUST APPEAR ON THE CONTROL PLANS ACCORDING TO QS-9000. THESE CONTROL PLANS REQUIRE PRODUCT ENGINEERING APPROVAL.

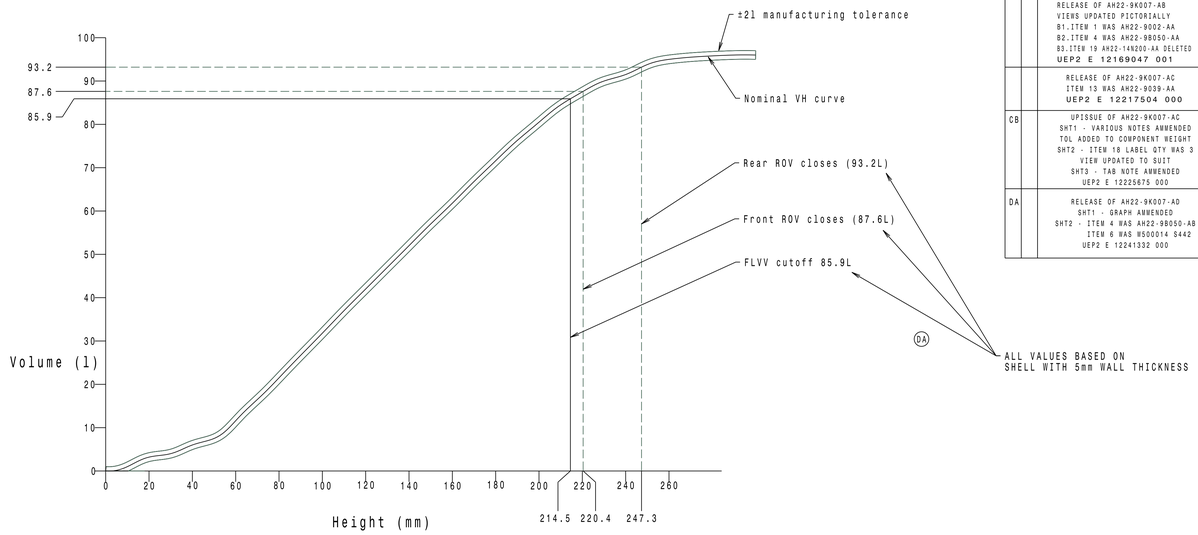

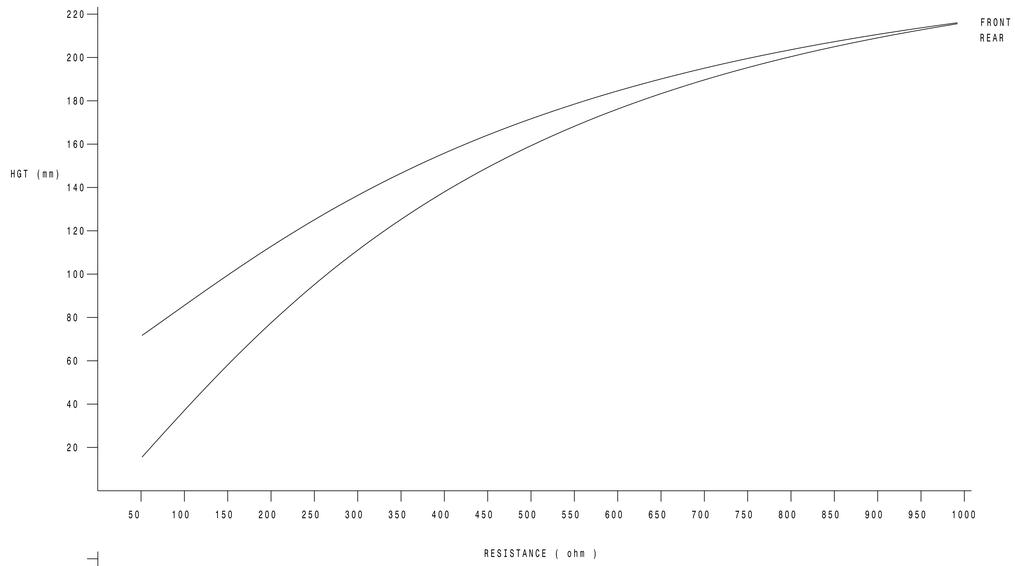

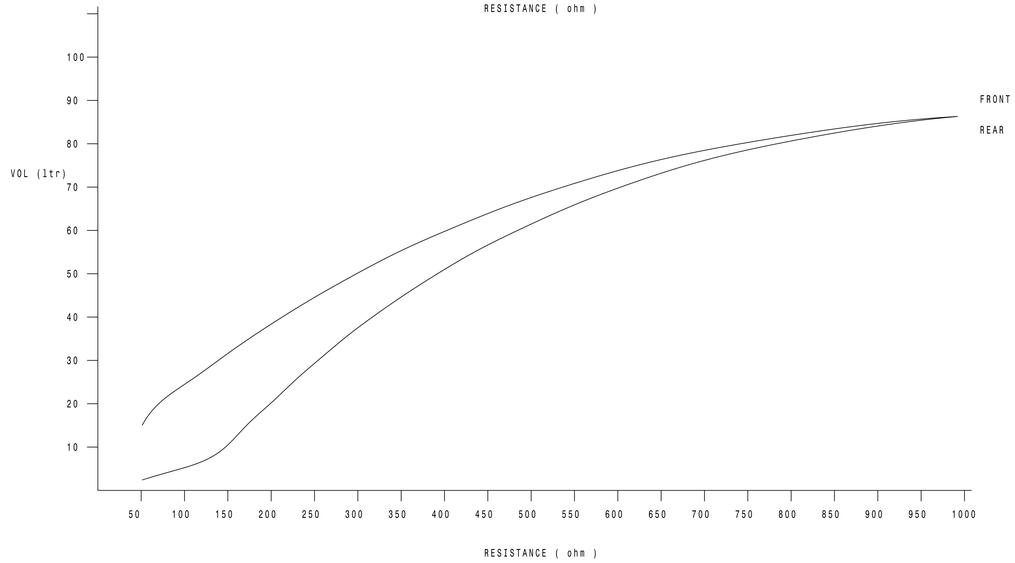

ORIGINAL LANDROVER MOD COLUMN			
		RELEASE OF AH22-9K007-AA UEP2 I 12097391 000	GPARKE35 20080307
		RELEASE OF AH22-9K007-AB VIEWS UPDATED PICTORIALLY B1.ITEM 1 WAS AH22-9002-AA B2.ITEM 4 WAS AH22-9B050-AA B3.ITEM 19 AH22-14N200-AA DELETED UEP2 E 12169047 001	GPARKE35 20081001
		RELEASE OF AH22-9K007-AC ITEM 13 WAS AH22-9039-AA UEP2 E 12217504 000	pmorga65 20090312
CB		UPISSUE OF AH22-9K007-AC SHT1 - VARIOUS NOTES AMMENDED TOL ADDED TO COMPONENT WEIGHT SHT2 - ITEM 18 LABEL QTY WAS 3 VIEW UPDATED TO SUIT SHT3 - TAB NOTE AMMENDED UEP2 E 12225675 000	pmorga65 20090427
DA		RELEASE OF AH22-9K007-AD SHT1 - GRAPH AMMENDED SHT2 - ITEM 4 WAS AH22-9B050-AB ITEM 6 WAS M500014 S442 UEP2 E 12241332 000	pmorga65 20090607

LTRS	REVISIONS			
ORIGINATOR	CHECKER	ENGR APP	MATL APP	
CAD FILE REMASTERED AND REDRAWN IN CATIA V5, AFTER LANDROVER ISSUE D REVISION OF AH22-9K007-AD D1 - TRACEABILITY NOTE AMENDED D2 - ITEM 6 TORQUE WAS 3.5Nm UEP2 E 12290904 000 20091113				
PMORGA65	SCHECKLE	KWILKIN6	MATSENG	
RELEASE OF AH22-9K007-AE SEE SHEET 2 E1 - ITEM 13 WAS AH22-9039-AB UEP2 E 50000292 000 20100823				
PMORGA65	SCHECKLE	KWILKIN6	MATSENG	
RELEASE OF AH22-9K007-AF SEE SHEET2 ITEM 12 WAS AH22-9H307-AA ITEM 13 WAS AH22-9039-AC ITEM 16 WAS AH22-9066-AA UEP2 E 50019529 000 20110913				
HJAYARAM	PREDHEAD	PWADSWOR	MATSENG	

REFERENCE	DS-L319-100100-C810_02-10		
PART MUST COMPLY WITH RESTRICTED SUBSTANCE MANAGEMENT STANDARD WSS-M99P9999-A1 TO SAFEGUARD HEALTH, SAFETY AND THE ENVIRONMENT			
DRAFTED IN ACCORDANCE WITH FORD MOTOR COMPANY ENGINEERING CAD AND DRAFTING STANDARDS VERSION_23		3RD ANGLE PROJ DIMENSIONS ARE IN MILLIMETERS	
CAD TYPE K-CATIA5	CAD LOC. TC	CAD FILE AH22-9K007-A-DWG-01 . 4	DTMC IS MASTER
OPER. NO. N/A	UNIT N/A	DRAWING AH22-9K007-AF	
DESIGN PREDHEAD	DETAIL HJAYARAM	TITLE TNK + SDR ASY FUL (PETROL)	SHT 1 OF 3
CHECKED PREDHEAD	SAFETY N/A		
SCALE 1:1	DATE 20110913	DIVISION JAGUAR LANDROVER PLANT GAYDON	
JAGUAR CARS LIMITED		LAND ROVER	

CB

PRINTED COPIES ARE UNCONTROLLED

	ITEM NO	PART NO.	DESCRIPTION	NO OFF		REMARKS
B1	1	AH22-9002-AB	TNK ASY FUL	1		
	2	5H22-9055-SB	STRP FU/TNK SUPT	1		
	3	6H52-48781-BA	KIT FUL TNK STP	2		
DA B2	4	AH22-9B050-AC	TUB-FUL/TNK VPR OLET	1		
	5	AH22-9B286-AA	TUB ASY FUL SPLY	1		
DA	6	W500215-S442	BOLT M6x25 PILOT	2		
	7	UH12-0256-DDA	RIV-EYLT TYP	2		
	8	AH22-9J328-AA	TUB-FUL/VPR TO STRG CNSTR	1		
	9	8H22-9047-AA	HOS FU/TNK FILL	1		
	10	UH12-1861-TA	CLIP	1		
	11	5H22-9B007-EA	SHLD FU/TNK	1		
	12	AH22-9H307-AB	SDR & PMP ASY-FU/TNK	1		
E1 C	13	AH22-9039-AD	FLNG FU/TNK	1		
	14	6H52-9276-AA	GSKT-FU/TNK SDR	1		
	15	AH22-9C385-AA	RG-FU/PMP RET LK	1		
	16	AH22-9066-AB	BRKT ASY-FU/TNK SUPT	1		
	17	AH22-2A826-AA	CLP P/BRK CA RET	3		
CB	18	-	LABELS	2		
B3						

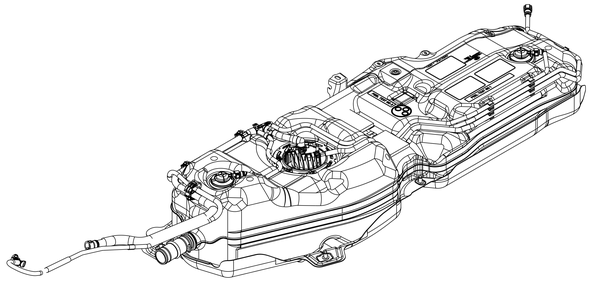

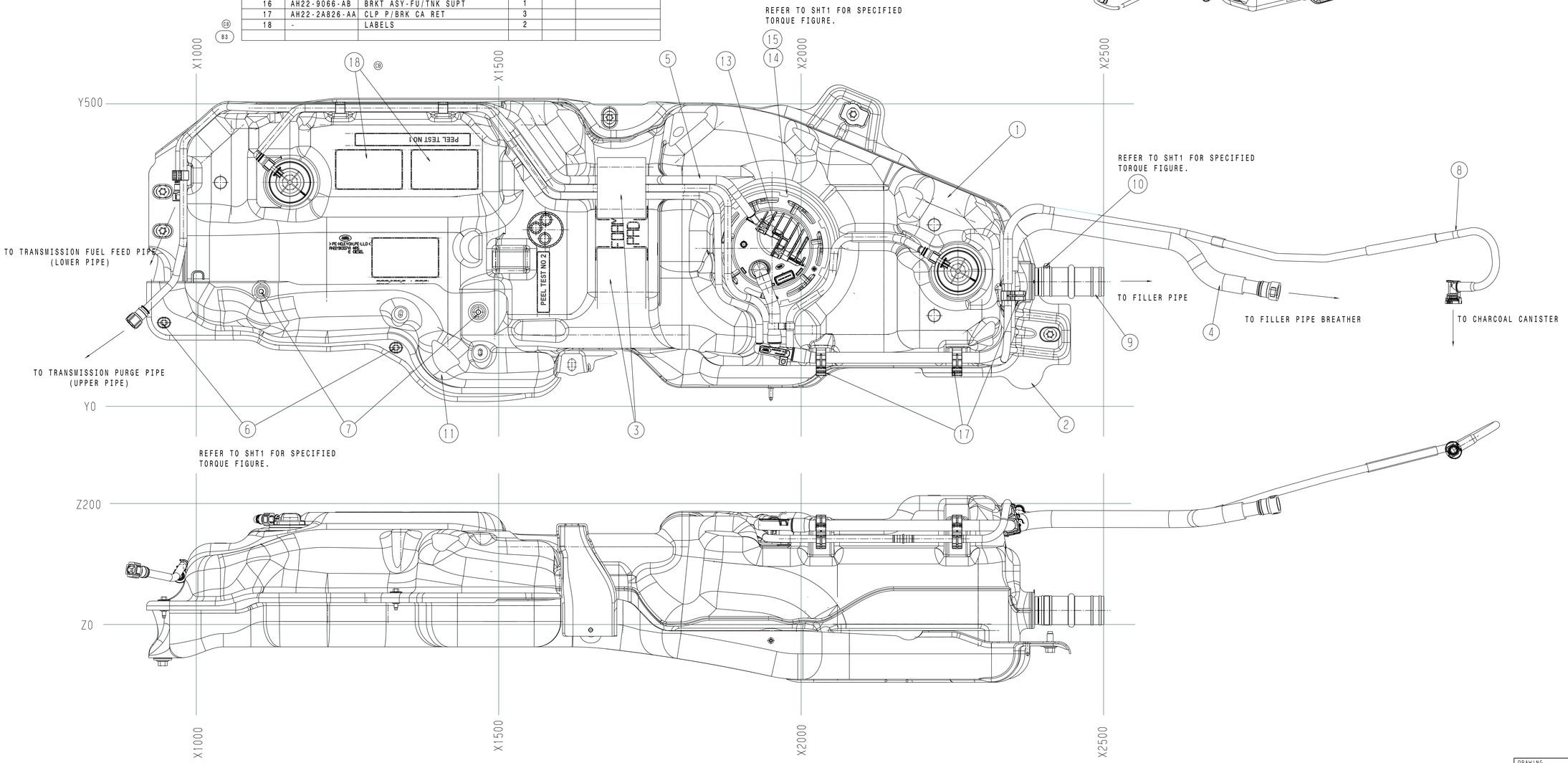

DRAWING AH22-9K007-AF	REV 4	SHT 2 OF 3
CAD FILE AH22-9K007-A-DWG-01	JAGUAR CARS LIMITED	LAND ROVER

PRINTED COPIES ARE UNCONTROLLED

	ITEM NO	PART NO.	DESCRIPTION	NO OFF		REMARKS
B1	1	AH22-9002-AB	TNK ASY FUL	1		
	2	5H22-9055-SB	STRP FU/TNK SUPT	1		
	3	6H52-48781-BA	KIT FUL TNK STP	2		
DA B2	4	AH22-9B050-AC	TUB-FUL/TNK VPR OLET	1		
	5	AH22-9B286-AA	TUB ASY FUL SPLY	1		
DA	6	W500215-S442	BOLT M6x25 PILOT	2		
	7	UH12-0256-DDA	RIV-EYLT TYP	2		
	8	AH22-9J328-AA	TUB-FUL/VPR TO STRG CNSTR	1		
	9	8H22-9047-AA	HOS FU/TNK FILL	1		
	10	UH12-1861-TA	CLIP	1		
	11	5H22-9B007-EA	SHLD FU/TNK	1		
	12	AH22-9H307-AB	SDR & PMP ASY-FU/TNK	1		
E1 C	13	AH22-9039-AD	FLNG FU/TNK	1		
	14	6H52-9276-AA	GSKT-FU/TNK SDR	1		
	15	AH22-9C385-AA	RG-FU/PMP RET LK	1		
	16	AH22-9066-AB	BRKT ASY-FU/TNK SUPT	1		
	17	AH22-2A826-AA	CLP P/BRK CA RET	3		
CB	18	-	LABELS	2		
B3						

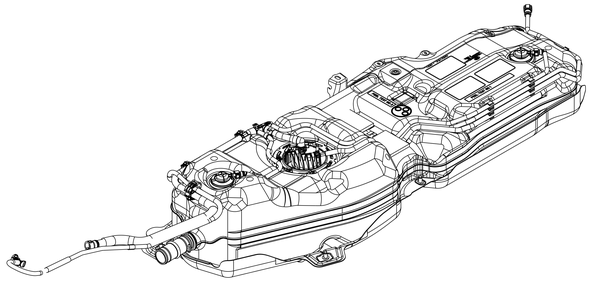

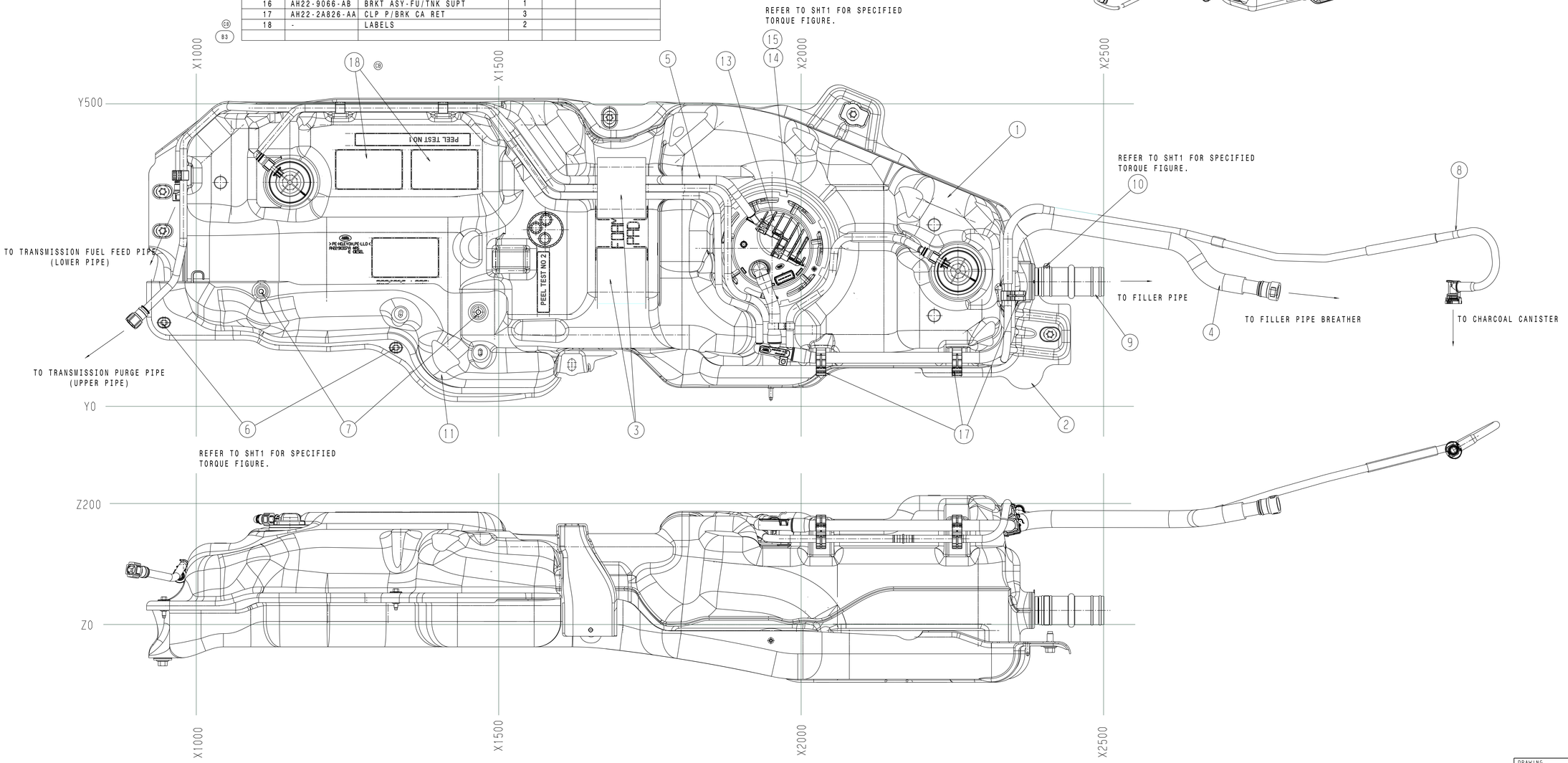

DRAWING AH22-9K007-AF	REV 4	SHT 2 OF 3
CAD FILE AH22-9K007-A-DWG-01	JAGUAR CARS LIMITED	LAND ROVER

PRINTED COPIES ARE UNCONTROLLED

	ITEM NO	PART NO.	DESCRIPTION	NO OFF		REMARKS
B1	1	AH22-9002-AB	TNK ASY FUL	1		
	2	5H22-9055-SB	STRP FU/TNK SUPT	1		
	3	6H52-48781-BA	KIT FUL TNK STP	2		
DA B2	4	AH22-9B050-AC	TUB-FUL/TNK VPR OLET	1		
	5	AH22-9B286-AA	TUB ASY FUL SPLY	1		
DA	6	W500215-S442	BOLT M6x25 PILOT	2		
	7	UH12-0256-DDA	RIV-EYLT TYP	2		
	8	AH22-9J328-AA	TUB-FUL/VPR TO STRG CNSTR	1		
	9	8H22-9047-AA	HOS FU/TNK FILL	1		
	10	UH12-1861-TA	CLIP	1		
	11	5H22-9B007-EA	SHLD FU/TNK	1		
	12	AH22-9H307-AB	SDR & PMP ASY-FU/TNK	1		
E1 C	13	AH22-9039-AD	FLNG FU/TNK	1		
	14	6H52-9276-AA	GSKT-FU/TNK SDR	1		
	15	AH22-9C385-AA	RG-FU/PMP RET LK	1		
	16	AH22-9066-AB	BRKT ASY-FU/TNK SUPT	1		
	17	AH22-2A826-AA	CLP P/BRK CA RET	3		
CB	18	-	LABELS	2		
B3						

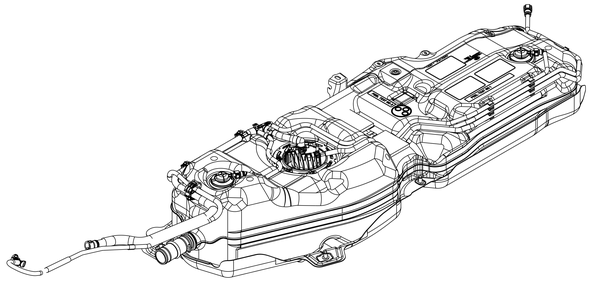

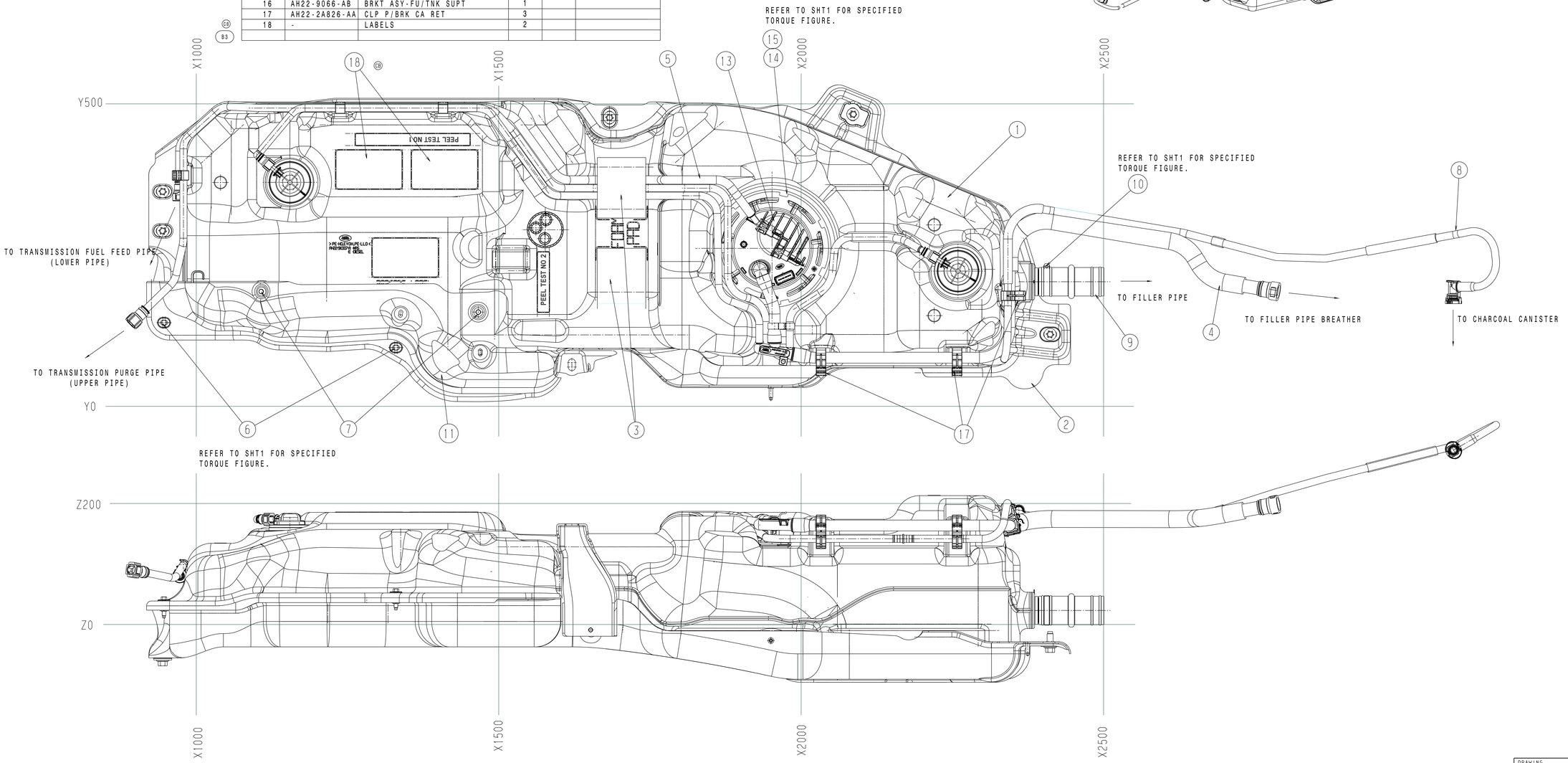

DRAWING AH22-9K007-AF	REV 4	SHT 2 OF 3
CAD FILE AH22-9K007-A-DWG-01	JAGUAR CARS LIMITED	LAND ROVER

PRINTED COPIES ARE UNCONTROLLED

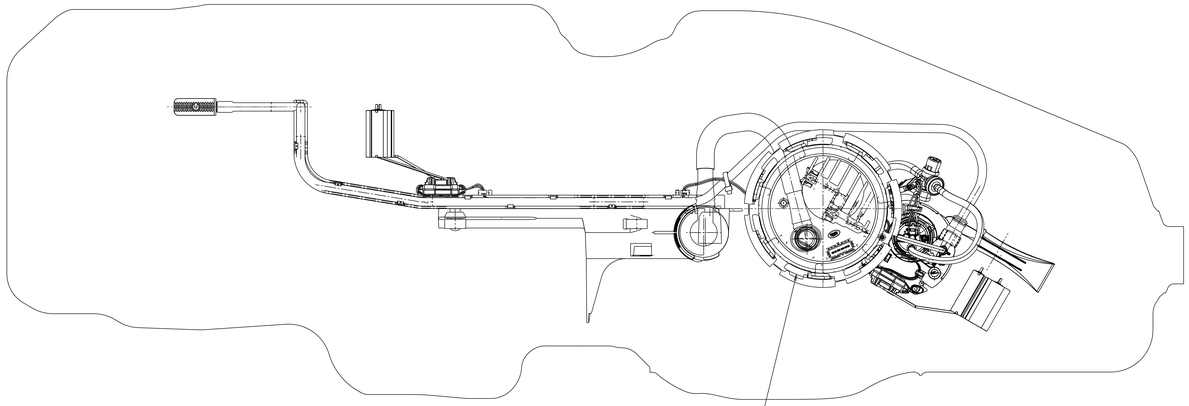

(B) FLANGE TAB LOCATED IN THIS POSITION

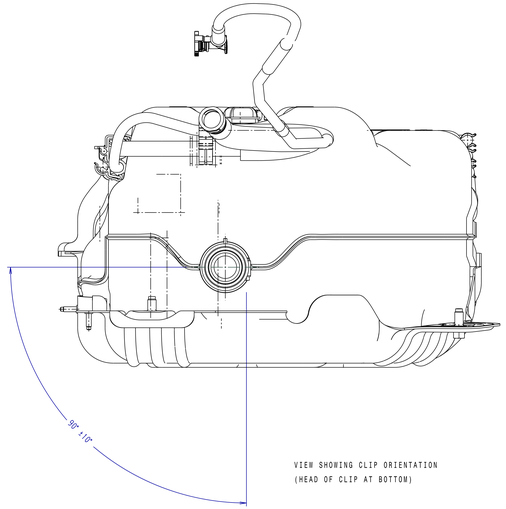

VIEW SHOWING CLIP ORIENTATION
(HEAD OF CLIP AT BOTTOM)

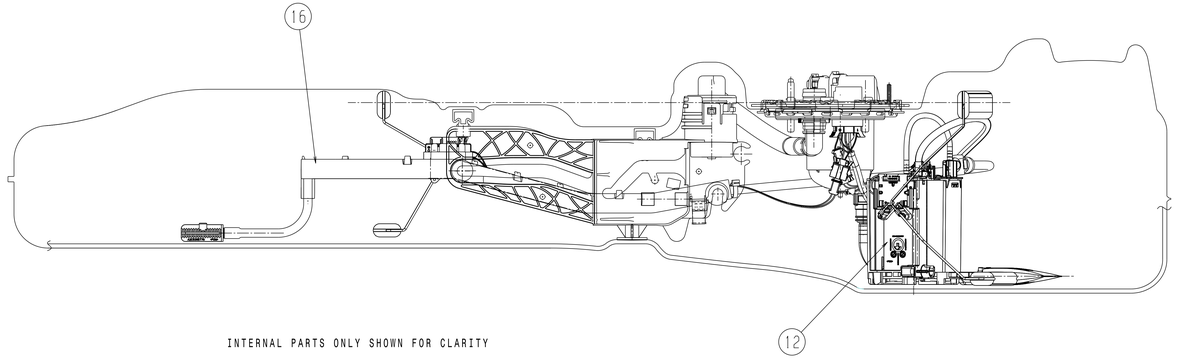

INTERNAL PARTS ONLY SHOWN FOR CLARITY

DRAWING	AH22-9K007-AF	REV L	SHT 3 OF 3
CAD FILE AH22-9K007-A-DWG-01	JAGUAR CARS LIMITED	LAND ROVER	

PRINTED COPIES ARE UNCONTROLLED