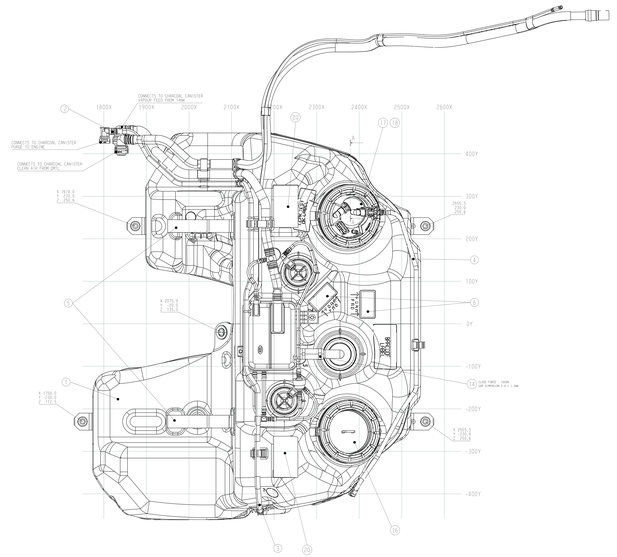


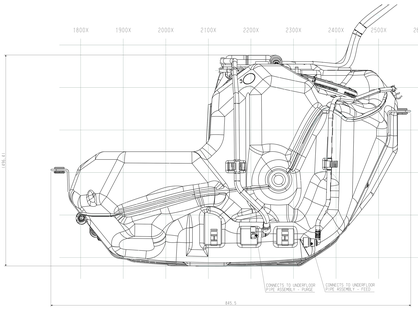


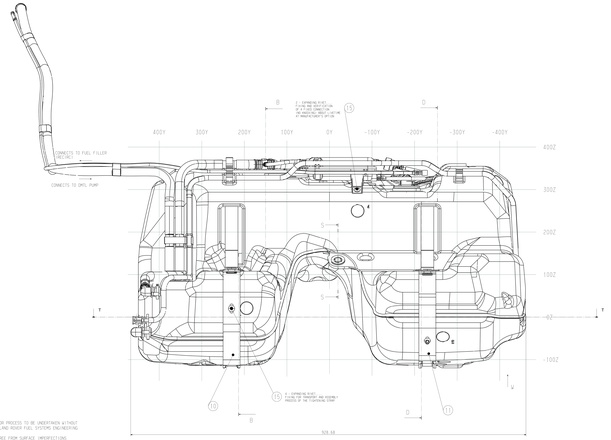


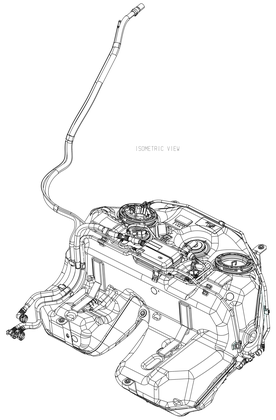

NO LUBRICANTS TO BE USED DURING MANUFACTURE OF PARTS(S). TO ASSEMBLE COMPONENT PARTS(S) OR TO ASSEMBLE COMPONENTS TO VEHICLE UNLESS SPECIFIED ON DRAWING OR SPECIFIED BY LAND ROVER MATERIALS AND FUEL SYSTEM ENGINEERING DEPARTMENTS.

COMPONENT MUST BE FREE INTERNALLY FROM THE FOLLOWING:
- ANY AND ALL MANUFACTURING PROCESSING FLUIDS
- ANY PRESSURE TEST FLUIDS
- MANUFACTURING DEBRIS OR SWARF
- WATER, SOAP OR DUST INGRESS

TOTAL INTERNAL DEBRIS MUST NOT EXCEED 30.0 mg WHEN TESTED TO UNLTM 30.10101 OR SIMILAR APPROVED METHOD
THE MAXIMUM PARTICLE SIZE MUST NOT EXCEED 450 m-microns/0.5mg WHEN MEASURED IN ACCORDANCE WITH UNLTM 30.00.101

ASSEMBLIES TO BE PRILLETISED / STILLAGED SUCH THAT NO INTERNAL OR EXTERNAL DAMAGE, OR CONTAMINATION, (INCLUDING WATER INGRESS), CAN OCCUR DURING TRANSIT AND STORAGE

ALL ORIFICES, VENT LINES, HOSES, ELECTRICAL CONNECTORS ETC. TO BE SEALED FOR PRODUCTION, TRANSIT AND STORAGE. ALL SEALING MATERIALS TO BE SUITABLE FOR EFFECTIVE SEAL(INGLONG PERIODS OF STORAGE/PRILLETISATION. MUST PROTECT ANY SEALING SURFACES AND BE EASILY REMOVABLE WITHOUT TOOLS.

IT MUST NOT BE POSSIBLE TO FIT ASSEMBLY MATING COMPONENTS WITH CAPS / PLUGS STILL IN PLACE

ASSEMBLY TO BE TRANSPORTED, STORED AND PRILLETISED SUCH THAT IT REMAINS FLAT IN THE NORMAL VEHICLE INSTALLATION POSITION SUCH THAT NO DAMAGE CAN OCCUR TO THE INTERNAL PARTS OF THE ASSEMBLY

DO NOT USE HOSES / PIPES ATTACHED TO THIS ASSEMBLY TO REMOVE FROM STILLAGE OR CARRY COMPONENT.

FULL TRACE ABILITY TO BE OPERATED ON THIS COMPONENT / ASSEMBLY WITH REGARD TO :- DATE OF MANUFACTURE, ASSEMBLY LINE TEST DATA, OPERATION, SECOND TIER COMPONENTS (PURP)

LABEL TO ENSURE FULL TRACE ABILITY OF ASSEMBLY AND COMPONENT PARTS TO BE FITTED SUCH THAT IT CAN BE SEEN WITHOUT COMPONENT REMOVAL FROM VEHICLE.

ALL PARTS MUST BE FREE FROM FLASH, BURRS, SHARP EDGES AND ANY OTHER DEFECTS WHICH COULD CAUSE DAMAGE TO ANY MATERIAL OR PERFORMANCE OF NAV CAUSE FLUSH DURING HANDLING.

NO CHANGE TO SUB-COMPONENTS. ASSEMBLY OR PROCESS TO BE UNDERTAKEN WITHOUT PRIOR CONSULTATION AND AGREEMENT WITH LAND ROVER FUEL SYSTEMS ENGINEERING

ALL SEALING SURFACES TO BE CLEAN AND FREE FROM SURFACE IMPERFECTIONS INCLUDING HOLES, SPOTS, DENTS, FLASH AND OFFSET MOULDING LINES

THE FOLLOWING FUEL FLOW CLEANLINESS SPECIFICATION IS THE TOTAL CONTRIBUTION COMP FROM:(EG) FOR THIS ASSEMBLY.

| | |
|---|---|
| 30-100μ | QUANCITY =108 |
| 100-150μ | QUANCITY =54 |
| 150-200μ | QUANCITY =18 |
| >200μ | QUANCITY =9 |

REMOVE ALL DUST CAPS PRIOR TO ASSEMBLY OF COMPONENTS TO VEHICLE

HOSE ASSEMBLY - ENSURE ALL HOSES ARE FULLY ASSEMBLED UP TO SECOND PIPE BEAD OR ANCHOR FACE AND ALIGNED WITH FITTING MARKS WHERE APPROPRIATE. ALL LOCATING FEATURES AND / OR CLIPS TO BE SECURE AND CORRECTLY POSITIONED IN LINE WITH DRAWING.

▽ 1000 LEAK TEST
LEAK TEST TO ES-YUSA-9000-AC

1000 FUEL SUPPLY AND GAUGE UNIT FUNCTIONALITY TEST TO BE CARRIED OUT IN LINE WITH PROCESS CONTROL DOCUMENTS AGREED WITH LAND ROVER FUEL SYSTEMS ENGINEERING
TEST SEQUENCE - PRESSURE CHECK
PUMP - PUMP START / ANY DRAW / PRESSURE CHECK
TEST VOLTAGE = 6V - CURRENT DRAW = 0.1 - 5A - TIME = 0.5s - MAX 3 TESTS PER PUMP
GAUGE - SENDER VALUES & EMPTY = 0.5 (± 0.5) AND FULL = 90.2 ± 10.5Ω

CLAMPING FAIR TO CLOSED RS SHOWN
POSITION OF LAB WITER WORKING + 15 TO BE CLEAR OF TIMING/TIES ETC.
ASSEMBLY OF EAR CLAMP ONLY WITH CLAMP MANUFACTURERS RECOMMENDED TOOL WITH EAR HOLD DOWN DEVICE

PLASTIC MATERIAL IDENTIFICATION MARKING TO COMPLY WITH FORD STANDARD EX

COMPONENT TO CARRY LAND ROVER PARTS BRANDING AND CODING IN LINE WITH LAND ROVER STANDARD LRTSPM-001 AND E108 FORD BRANDING DIRECTIVE. APPLICATION IS NOT TO AFFECT COMPONENT FIT OR FUNCTION.

THIS COMPONENT TO COMPLY WITH FORD ENGINEERING SPECIFICATION ES-3L8A-9002-BB (VERIFICATION: SECTIONS 3.4, 3.8, 3.9, 3.12, 3.15)
SECTION 3.4 MOLARD, DISPERSED DYE
SECTION 3.4 DRIP TEST BY 3.5M FUEL LOS JB11

▽ THIS COMPONENT IS TO COMPLY WITH THE SPECIFICATION DETAILED IN THE DESIGN VERIFICATION PLAN.

DVP GENERAL VEHICLE NASCOC : LVR SYSTEMS DEGAY 4470.100

DVP COMPONENT : FUEL TANKS : SEE KSL TEST REPORTS

DVP COMPONENT FOR MRFS RETROS : SEE SCHEMES 4DG TEST REPORTS

NO DEVIATION FROM THE ABOVE SPECIFICATIONS WITHOUT PRIOR CONSULTATION AND AGREEMENT WITH LANDROVER FUEL SYSTEMS ENGINEERING.

FUEL TANK LIQUID CAPACITY 100 LT (ACCORDING TO FTA 15671

FUEL TANK ASSEMBLY COMPLETE WEIGHT 15.8kg ± 0.2kg

▽ TORQUE
ITEM No.7 TO BE TIGHTENED TO 35-40Nm
LOCKING FUEL TORQUE IS TO BE ACHIEVED WITHOUT INTERFERENCE WITH THE FUEL LINE
TORQUE / FLARE TIGHTENING RANGE TO BE MONITORED AND RECORDED ON AN AUDIT SYSTEM START AND END OF SHIFT.

IF ITEMS 16 OR 18 ARE DISTURBED IN SERVICE, NEW SEALS, ITEM 9 MUST BE USED.

**82** **IT IS THE RESPONSIBILITY OF THE COMPONENT/ASSEMBLY MANUFACTURER TO ENSURE THAT THE COMPONENT/ASSEMBLY MEETS THE REQUIREMENTS OF DATABSE PARTS MARKING -CODE. IT IS ALSO THE RESPONSIBILITY OF THE COMPONENT/ASSEMBLY MANUFACTURER TO ENSURE THAT COPIES OF APPROVAL CERTIFICATES FOR THE ASSEMBLY PLANT AND COMPONENT/ASSEMBLY ARE FORWARDED TO THE RELEVANT JLR REPRESENTATIVE UPON ISSUE FROM THE CHINESE AUTHORITIES.**

| | ITEM No. | STORE PART No. | LAND ROVER PART No. | OPM ESI/VELEM PART No. | DESCRIPTION | No. OFF (LH) | No. OFF (RH) | |
|---|---|---|---|---|---|---|---|---|
| | 1 | BH42-9002-AC | - | - | ASSEMBLY FUEL TANK WELDED (4WD) | 1 | 1 | D3 |
| | 2 | BH42-9A243-AB | KJL500242 | - | GENERATOR ASSEMBLY FUEL LINES VAPOUR MFD | 1 | 1 | |
| D1 | 3 | BH42-9J226-AB | - | - | PIPE ASSEMBLY - PURGE | 1 | 1 | |
| D2 | 4 | BH42-9J200-JB | - | - | TUB ASY FUL SEL | 1 | 1 | |
| | 5 | BH42-9200B-BB | WFX000025 | 6 FXG 667 X | STRIP-FUEL TANK PROTECTION | 1 | 1 | |
| | 6 | BH42-9200A-AB | WFX000025 | 6 FXG 666 X | STRIP-FUEL TANK PROTECTION | 1 | 1 | D1 |
| | 7 | BH42-9C586-AA | EWC000017 | - 15 NUT | NUT - FUEL TANK CLOSURE | 1 | 1 | |
| | 8 | BH42-9J416-AA | EWC000017 | - 15 NUT | RING ADAPTOR - FUEL TANK LOCKING | 1 | 2 | |
| | 9 | BH42-9C606-AA | EWC000017 | - | SEAL - FUEL TANK PUMP UNIT | 1 | 1 | |
| | 10 | BH42-9092-CB | WFX000012 | - | STRP ASY - FULTNK SUPT | 1 | 1 | |
| | 11 | BH42-9092-DB | WFX000025 | - | STRP ASY - FULTNK SUPT | 1 | 1 | |
| | 12 | BH42-1B6B-AA | WFX000025 | - | SPACER BUSH | 1 | 1 | |
| | 13 | BH42-9A000-AB | WFX000025 | 1 FX 6575 | SEAL - FUEL TANK RUBBER | 1 | 1 | |
| | 14 | BH42-1B6A-BBB | WFX000025 | 1 FX 9516 X | PLATE | 1 | 1 | |
| | 15 | BH42-9J706-DDA | WFX000025 | 6 FXG 687 | RIVET | 6 | 2 | |
| | 16 | BH42-9B113-AA | WGX000025 | 8 FXG 205 Z | COVER - FUEL TANK FLANGE (LHS) | 1 | - | |
| D4 | 17 | BH42-9H201-AE | | | SCR - PMP ASY FULTNK | 1 | 1 | |
| | 18 | BH42-9K309-AD | | | FLAG FULTNK SCR - SUTT SUB MTG | 1 | 1 | |
| | 19 | BH42-9J75-AC | | | SCR - SUTT SUB ASY FULTNK | 1 | 1 | |
| | 20 | BH42-9B113-AA | | | NON-DISPOSABLE LEVEL SENSOR | 1 | 1 | |
| | 21 | BH42-9200B-AA | | | FORM PAD | 2 | 2 | D2 |

| REV | DATE | DESCRIPTION |
|---|---|---|
| BH42-9A243-AB | CHANGED | CHANGE MAP |
| RELEASE OF BH42-9K007-AA | | |
| 01-1109 to WKD-9K109-UK | | 20100628 |
| SEPZ E 5000H4443 000 | | 20100628 |
| BH42-9A243-AB | CHANGED | CHANGE MAP |
| RELEASE OF BH42-9K007-AA | | |
| 01-1109 to WKD-9K109-UK | | |
| SEPZ E 5000H4443 000 | | 20100629 |
| BH42-9A243-AB | CHANGED | CHANGE MAP |
| RELEASE OF BH42-9K007-AA REV B | | |
| 01-NOTE ADDED FOR CHINA MARKET | | |
| SEPZ E 5000H5193 000 | | 20100804 |
| BH42-9A243-AB | CHANGED | CHANGE MAP |
| RELEASE OF BH42-9K007-AC | | |
| 01-PART # WAS BH42-9J226-AA | | |
| SEPZ E 5000H8944 000 | | 110106 |
| BH42-9A243-AB | CHANGED | CHANGE MAP |
| RELEASE OF BH42-9K007-AC | | |
| 01-ITEM 9 CHANGED FROM FAN SEAL TO WAVE | | |
| SEPZ E 5000H8944 000 | | 20110401 |
| BH42-9A243-AB | CHANGED | CHANGE MAP |
| RELEASE OF BH42-9K007-AC | | |
| 01-ITEM 6 WAS 6 OFF | | |
| 02-ITEM 7 WAS 1 OFF | | |
| 03-ITEM 1 WAS BH42-9K007-JB | | |
| LR PART No DELETED | | |
| SEPZ E 5000H8945 000 | | 20110616 |
| BH42-9A243-AB | CHANGED | CHANGE MAP |
| RELEASE OF BH42-9K007-AF | | |
| EX: PARTS UP-SUPPLIED | | |
| SEPZ E 5000H9533 000 | | 20110420 |

| REFERENCE | | | SF-1322-100107-P210_02-11 | | |
|---|---|---|---|---|---|
| PART MUST COMPLY WITH REGIRFIED SUBSTANCE MANAGEMENT STANDARD | | | | | |
| ALLOW FOR MATERIAL ADDITIONS, DELETIONS AND TOLERANCES | | | | | |
| DRAWING IN REGISTERED WITH | | | | | |
| DRAWING MUST BE REGISTERED AND CHANGES CURRENT AT ABOVE REGISTER | | | | | |
| LAD TYPE/LAD LEC | LAD STYLE | | | | |
| PLANTAR | BH42-9K007-AF | | | | |
| SECTION | SECTION 1 | DRAWING | BH42-9K007-AF | | |
| CHECKED | DATE | | | | |
| CHECKED | DATE | | | | |
| STATUS | DATE | | | | |
| | | | | | |

| | | |
|---|---|---|
| | | |
| | | |
| | | |

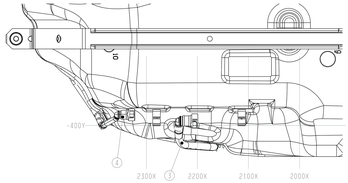


VIEW ON ARROW W
Scale: 1:2

SECTION C
Scale: 1:2

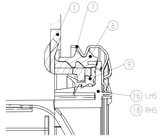


SECTION : A/A TYPICAL
Scale: 2:1

SECTION : D/D
REMOTE JET AND SENDER ASSEMBLY REMIAN
UNSECTIONED FOR CLARITY PURPOSES

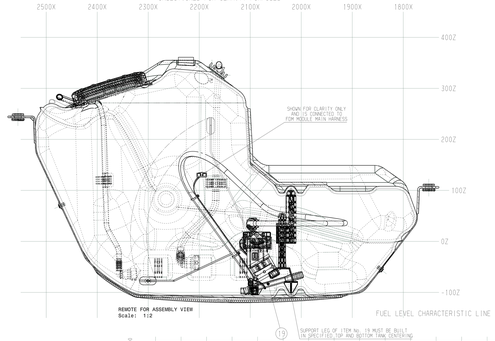


SECTION : T- T
Scale: 1:2
DELIVERY MODULE AND REMOTE SENDER
REMOVED FOR CLARITY

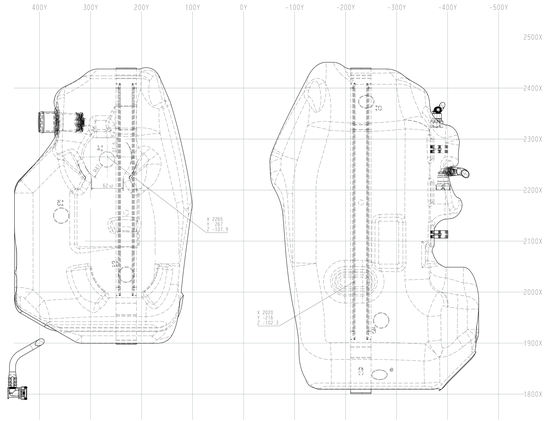


SECTION : B/B
FUEL PUMP MODULE AND PIPES REMAIN
UNSECTIONED FOR CLARITY PURPOSES

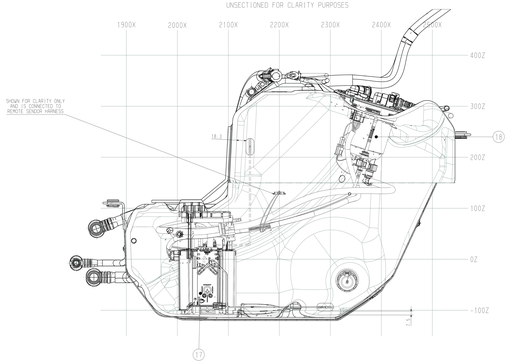


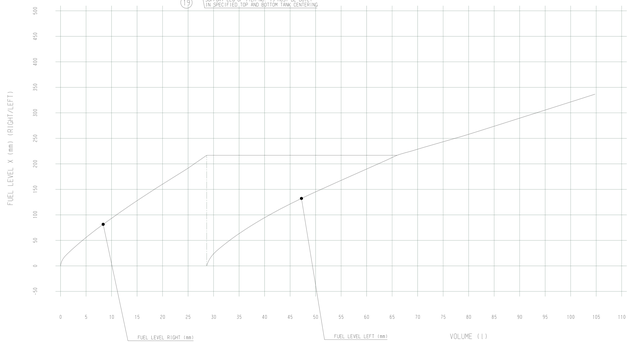


This part must comply with Drawing Erratum ERR or the superior number shown in the authority for non-compliance. Example: Number

No design, process or tooling changes without prior approval from LR Engineering.

| Drawn Parts Issue | Date | Approved |
|---|---|---|
| | | |

DRAWING BH42-9K007-AF REV - SHT 2 OF 2

TOP FILE BH42_9K007_A_CWS.IS

JAGUAR LAND ROVER LIMITED

PRINTED COPIES ARE UNCONTROLLED

NOTES:

ITEMS MARKED WITH * REFER TO L538 SC-CC AGREEMENT SHEET

THIS ASSEMBLY MUST COMPLY WITH ENGINEERING SPECIFICATION
▽ ES 7U5A-9K007-AA, EXCEPT FOR THE SECTION 3.6 CONTAMINATION
WHERE NOTE BELOW APPLIES AND SECTION 3.3.2 REFER TO TANK WELDED AND BLOWN SHELL DRAWINGS
LATEST ISSUE

* TOTAL INTERNAL DEBRIS MUST NOT EXCEED 4.0mg WHEN TESTED TO
LRLTM 30.IC101 OR SIMILAR APPROVED METHOD.
THE MAXIMUM PERMISSIBLE PARTICLE SIZE MUST NOT EXCEED
400 microns/0.6mg WHEN MEASURED IN ACCORDANCE WITH LRLTM 30.DD.103.

LOCKING RING TO MEET THE REQUIREMENTS OF SAE J2587.

D1 COMPONENT TO COMPLY WITH FORD MOTOR COMPANY ENGINNERING CAD &
DRAFTING STANDARD E-3 & E-108. (CODING & BRANDING)
COMPONENT TO COMPLY WITH FORD MOTOR COMPANY ENGINEERING CAD &
DRAFTING STANDARD E-4 (IDENTIFICATION OF POLYMERIC MATERIALS

GROSS INTERNAL CAPACITY - 85.0 LITRES

LIQUID CAPACITY (ACCORDING TO FU-1047) -70.5 LITRES

D2 USABLE CAPACITY (ACCORDING TO FU-1049)- 68.5 LITRES

D3 WEIGHT OF FUEL TANK ASSEMBLY - 11.26kg ± 0.5kg H3

FOR CURRENT RELEASE STATUS SEE WERS ENGINEERING NOTICE.

AS SUPPLIED TO JAGUAR LAND ROVER COMPONENT MUST BE FREE INTERNALLY
FROM THE FOLLOWING:-
- ALL MANUFACTURING AND PROCESS TEST FLUIDS.
- ALL IN PROCESS PRESSURE TEST FLUIDS.
- ALL MANUFACTURING DEBRIS.
-WATER, DIRT OR DUST INGRESS.

FULL TRACEABILITY TO BE INDELIBLY MARKED / LABELLED ON THIS ASSEMBLY
WITH REGARD TO YEAR, MONTH, DAY, TIME, ASSEMBLY LINE TEST DATA AND
CRITICAL SECOND TIER SUPPLIER COMPONENTS ie FUEL DELIVERY MODULE
AND SENDER(S).

100% LEAK TEST ACCORDING TO ESYU5A-9000-AC: PRESSURE DIFFERENTIAL TEST USING
100% HELIUM. LEAK RATE TO BE LESS THAN 1.4 x 10-5 mbar 1/s AT 70mb DIFFERENTIAL PRESSURE
AFTER LEAK TESTING NO PART TO BE REMOVED OR CHANGED WITHOUT RETESTING.

100% FUEL PUMP MODULE AND SENDER UNIT AND TANK VALVE FUNCTIONALITY
TESTS TO BE CARRIED OUT IN LINE WITH PROCESS CONTROL DOCUMENTS AGREED
WITH JAGUAR/LANDROVER PRODUCT DEVELOPMENT AND STA DEPARTMENTS.

PUMP START TEST - MEDIUM AIR, VOLTAGE 6+/-0.1V.
MEASURING TIME 1<t<5 SECS.
CURRENT <4A. MAX 2 TESTS.

▽ SENDER UNIT(S) ROLL OVER TEST TO CONFORM -
SENDER FLOAT POSITION EMPTY RESISTANCE VALUE : 992±10.5 Ω
SENDER FLOAT POSITION FULL RESISTANCE VALUE : 51.2±1 Ω
SENDER FLOAT POSITION BACK TO EMPTY RESISTANCE VALUE : 992±10.5 Ω

▽ FOR ELECTRICAL CONNECTOR PIN OUT INFORMATION REFER TO DRAWING
BJ32-9A309-AA

▽ FUEL TANK GASKET TO BE CLEAN AND FREE FROM ANY SURFACE IMPERFECTION THAT
MAY BE DETRIMENTAL TO ITS SEALING INTEGRITY.

▽ CONTROL ITEM - THE ▽ ALSO IDENTIFIES CRITICAL CHARACTERISTICS DESIGNATED BY THE CROSS FUNCTIONAL TEAMS DEVELOPING THE PRODUCT. THESE AND ADDITIONAL CRITICAL CHARACTERISTICS IDENTIFIED BY PROCESS REVIEWS MUST APPEAR ON THE CONTROL PLANS ACCORDING TO QS-9000. THESE CONTROL PLANS REQUIRE PRODUCT ENGINEERING APPROVAL.

▽ 100% TANK VENT SYSTEM - VACUUM TEST
(APPLY THE VACUUM AT THE BREATHER STUB CONNECTION)
ROLL TANK OVER 180° FROM NORMAL VEHICLE FITTED POSITION.
APPLY A VACUUM OF AT LEAST - 150mb.
EVACUATION TIME 5 SECS MINIMUM.
STABILISATION TIME 10 SECS MINIMUM.
LEAK CHECK FOR 20 SECS MINIMUM.
LEAK RATE TO BE <50ccm.
RELEASE VACUUM, ROLL BACK TO NORMAL VEHICLE FITTED POSITION.
ENSURE VALVE HAS RE-OPENED

ALL INTERNAL & EXTERNAL CONNECTIONS TO BE 100% VERIFIED.

▽ TORQUE FIGURES TO BE 100% MONITORED AND RECORDED ON AN AUDIT
SYSTEM - ITEM 4 TIGHTEN CAM LOCK TO CLOSURE STOP. TORQUE TO
ACHIEVE THIS 250Nm ±20Nm ANGULAR ROTATION START AND FINISH TO
BE MONITORED DURING ASSEMBLY. ANGULAR ROTATION 17.3°.

▽ AT KAUTEX UNIPART COVENTRY, FOLLOWING SPEC. ALLOWABLE:
FOR LOCKING RING (ITEM 4) TIGHTEN CAM LOCK TO CLOSURE STOP,
H8 WITH 100% CHECK TO ENSURE INCOMPLTE ROTATION IS IDENTIFIED AS NOK ON CAQ.
FOLLOW OPERATION WITH LEAK TEST SPECIFIED ON THIS DRAWING.

ALL FUEL LINES AND TANK OPENINGS AS DESIGNATED TO BE CAPPED
DURING ASSEMBLY, TRANSPORT AND STORAGE. CAP(S) MUST PROTECT
* ANY SEALING SURFACE AND MUST REMAIN EFFECTIVE FOR PROLONGED
STORAGE. CAP(S) MUST EASILY BE REMOVED WITHOUT THE USE OF
TOOLS. IT MUST NOT BE POSSIBLE TO FIT ASSEMBLY TO MATING
COMPONENTS WITH CAP(S) STILL IN PLACE.

NO LUBRICANT TO BE USED DURING THE MANUFACTURE OF PARTS OR
ASSEMBLY OF PARTS UNLESS AUTHORISED BY JLR MATERIALS AND
FUEL SYSTEM ENGINEERING DEPARTMENTS.

COMPONENT TO BE STOWED, PALLETISED, TRANSPORTED AND STORED
SUCH THAT NO DISTORTION OF FORM, INTERNAL OR EXTERNAL DAMAGE
OR DIRT INGRESS CAN OCCUR TO THE ASSEMBLY.

ASSEMBLY TO BE FREE FROM FLASH, BURRS, SHARP EDGES AND ANY
OTHER IMPERFECTIONS THAT MAY CAUSE INJURY DURING HANDLING
OR THAT WOULD BE DETRIMENTAL TO ITS ASSEMBLY OR PERFORMANCE.

CHANGES AFFECTING DESIGN, COMPOSITION OR PROCESSING TO THE
ASSEMBLY OR SUB COMPONENTS PREVIOUSLY APPROVED FOR PRODUCTION
REQUIRE PRIOR APPROVAL FROM JLR PRODUCT ENGINEERING. REFER TO
QS9000.

UNLESS OTHERWISE SPECIFIED ALL LINES AND SURFACES, SAME SIDE
OF MATERIAL AS DATUM.

ALL SEALING SURFACES TO BE CLEAN AND FREE FROM ANY SURFACE
IMPERFECTIONS (INCLUDING) HOLES, SPOTS, DENTS, FLASH AND OFFSET
MOULDING LINES.

AFTER ASSEMBLY ALL HOSES, PIPES TO BE FREE FROM KINKS.

ALL PROTECTIVE CAPS TO BE REMOVED, AND LINES TO BE UNSTOWED
PRIOR TO ASSEMBLY OF COMPONENT TO VEHICLE.

TEST CERTIFICATION LABEL / FINISHED GOODS LABEL -
- DATE OF FINAL ASSEMBLY
- TIME OF FINAL ASSEMBLY
- SEQUENTIAL ID NUMBER. (WHICH CORRELATES WITH CAQ DATA)
- PRODUCT DESCRIPTION & VARIANT INFORMATION
- PART NUMBER

SERVICE NOTE:
IF ITEM 11 FLNG FU/TNK SDR & OLET TUB MTNG (FLANGE) IS REMOVED OR DISTURBED IN
SERVICE A NEW GSKT FU/TNK SDR ITEM 3 MUST BE USED. REFER TO
SHEET 3 FOR CORRECT ORIENTATION REPLACEMENT OF ITEM 4
RG - FU/TNK.

| LTRS | REVISIONS | | |
|---|---|---|---|
| ORIGINATOR | CHECKER | ENGR APP | MATL APP |
| RELEASE OF BJ32-9K007-AA<br>UEP2 E 12303820 000 20100128 | | | |
| AWATSO38 | SWRIGH65 | KWILKIN6 | MATSENG |
| RELEASE OF BJ32-9K007-AB<br>UEP2 E 50002162 000 20100729 | | | |
| GPARKE78 | SWRIGH65 | KWILKIN6 | MATSENG |
| RELEASE OF BJ32-9K007-AC<br>C1.MINOR TANK SURFACE MODS.CLIP MODIFIED<br>C2.ITEM 1 WAS BJ32-9002-AA<br>UEP2 E 50004233 000 20100928 | | | |
| GPARKE78 | SWRIGH65 | KWILKIN6 | MATSENG |
| RELEASE OF BJ32-9K007-AD<br>D1. E3 WAS E2<br>D2. 68.5 WAS 70.0<br>D3. 11.1KG +/- 0.5KG WAS TBC<br>D4. BJ32-9002-AC WAS AB<br>D5. SCRAP VIEW ON ARROW Z ADDED (SHEET2)<br>D6. NOTE ADDED REF CLIP LATCH (SHEET3)<br>UEP2 E 50010365 000 20110208 | | | |
| SWRIGH65 | SWRIGH65 | KWILKIN6 | MATSENG |
| RELEASE OF BJ32-9K007-AE<br>E1. ITEM 7 WAS BJ32-48781-BA QTY 3<br>UEP2 E 50013485 000 20110421 | | | |
| SWRIGH65 | SWRIGH65 | KWILKIN6 | MATSENG |
| RELEASE OF BJ32-9K007-AF<br>F1.ITEM 2 WAS BJ32-9H307-AA<br>F2.ITEM 6 WAS BJ32-9066-AA<br>UEP2 E 50022232 000 20111013 | | | |
| GPARKE78 | SWRIGH65 | GVOICE | MATSENG |
| RELEASE OF BJ32-9K007-AF rev2<br>F3.SECTION A-A (SHT 3) PICTORIALLY UPDATED<br>UEP2 E 50026265 000 120110 | | | |
| GPARKE78 | GOAG | GVOICE | MATSENG |
| RELEASE OF BJ32-9K007-AG<br>G1. ITEM 2 WAS CJ32-9H307-AA<br>UEP2 E 50058622 000 130427 | | | |
| SWRIGH65 | SWRIGH65 | GVOICE | MATSENG |
| RELEASE OF BJ32-9K007-AH<br>H1. ITEM NO.1 WAS BJ32-9002-AC<br>UEP2 E 50094494 000 140805 | | | |
| JRATHORE | SWRIGH65 | GVOICE | MATSENG |
| RELASE OF BJ32-9K007-AH REV 16<br>H2 NOTE ADDED<br>SECTION 3.3.2 REFER TO TANK WELDED<br>AND BLOWN SHELL DRAWINGS LATEST ISSUE<br>H3 WEIGHT WAS 10.7Kg<br>H4 NOTE ADDED IN ZONE J23 SHEET2<br>BIRTH CERTIFICATE LABEL TO BE APPLIED<br>HERE (REF)<br>H5 NOTE ADDDED IN ZONE K17 SHEET2<br>ASSEMBLY OK LABEL APPLIED HERE (REF)<br>H6 NAME PLATE REVISED IN DETAIL VIEW ON<br>ARROW Z<br>H7 BOM REVISED<br>ALTERNATIVE NO ADDED FOR ITEM 4<br>H8 TORQUE TIGHTING SPEC. NOTE ADDED<br>UEP2 E 50156970 000 160527 | | | |
| RKALE2 | SCHECKLE | GVOICE | MATSENG |

| | | | |
|---|---|---|---|
| REFERENCE | DS-L538-100101-C01-12 | | |
| PART MUST COMPLY WITH RESTRICTED SUBSTANCE MANAGEMENT STANDARD STJLR.99.9999 TO SAFEGUARD HEALTH, SAFETY AND THE ENVIRONMENT | | | |
| DRAFTED IN ACCORDANCE WITH JAGUAR LAND ROVER PLM STANDARDS CURRENT AT INITIAL RELEASE | | 3RD ANGLE PROJ DIMENSIONS ARE IN MILLIMETRES | |
| CAD TYPE K-CATIA5 | CAD LOC. TCe | CAD FILE BJ32-9K007-A-DWG-01 | REV ;16 | DTMC IS MASTER |
| DESIGN AWATSO38 | DETAIL AWATSO38 | DRAWING BJ32-9K007-AH | SHT 1 OF 3 |
| CHECKED SWRIGH65 | SAFETY N/A | TITLE TNK & SDR ASY FUL | |
| SCALE 1:2 UOS | DATE 20090602 | | SIZE A1 |

JAGUAR LAND ROVER LIMITED

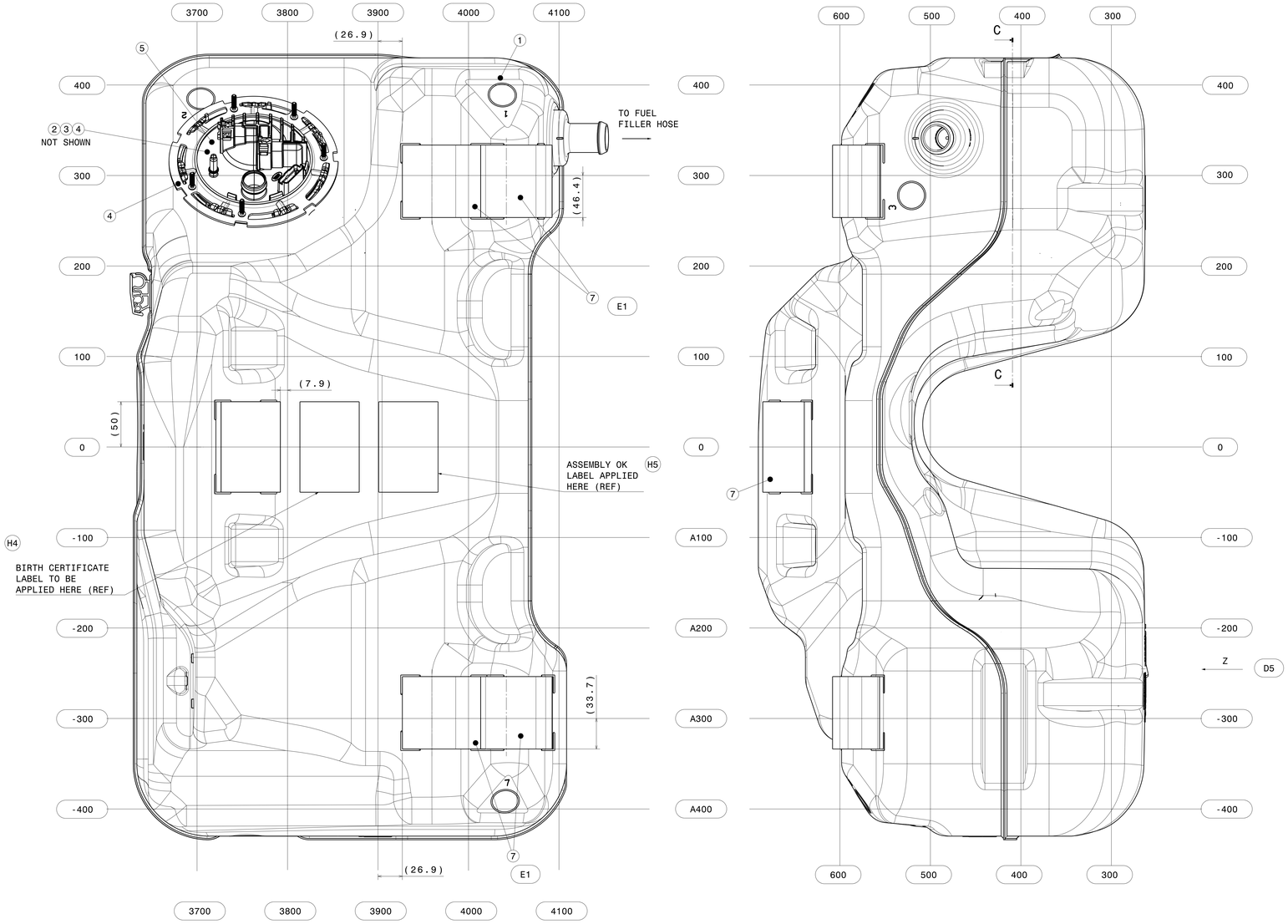


| ITEM | PART NUMBER | DESCRIPTION | QUANTITY |
|---|---|---|---|
| 1 | BJ32-9002-AD | TNK ASY FUL | 1 |
| 2 | CJ32-9H307-AB | SDR & PMP ASY-FU/TNK | 1 |
| 3 | 6H52-9276-AA | GSKT-FU/TNK SDR | 1 |
| 4 | 6H52-9C385-BB<br>ALTERNATIVE NO JJ32-9C385-AA | RG-FU/PMP RET LK | 1 |
| 5 | BH22-9A309-AA | FLNG FU/TNK SDR & OLET TUB MTG | 1 |
| 6 | BJ32-9066-AB | BRKT ASY-FU/TNK SUPT | 1 |
| 7 | 6H52-48781-AA | FOAM PAD (100 X 80 X 10) | 5 |
| 8 | BJ32-67520-CA | BRKT ASSY - TANK | 1 |

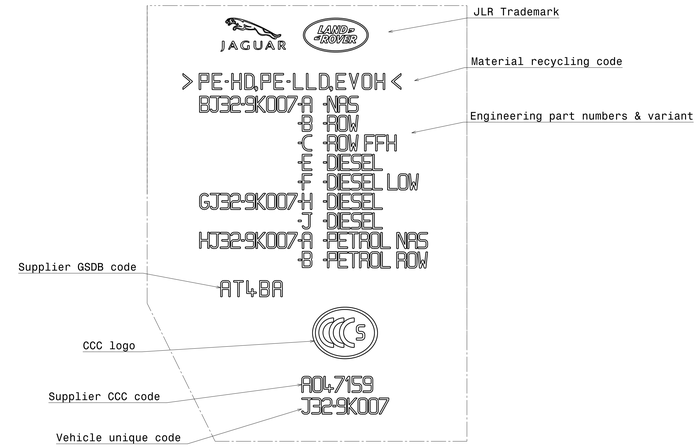


H6 D5 DETAIL VIEW ON ARROW Z
SHOWING PART MARKING
SCALE: 1:1

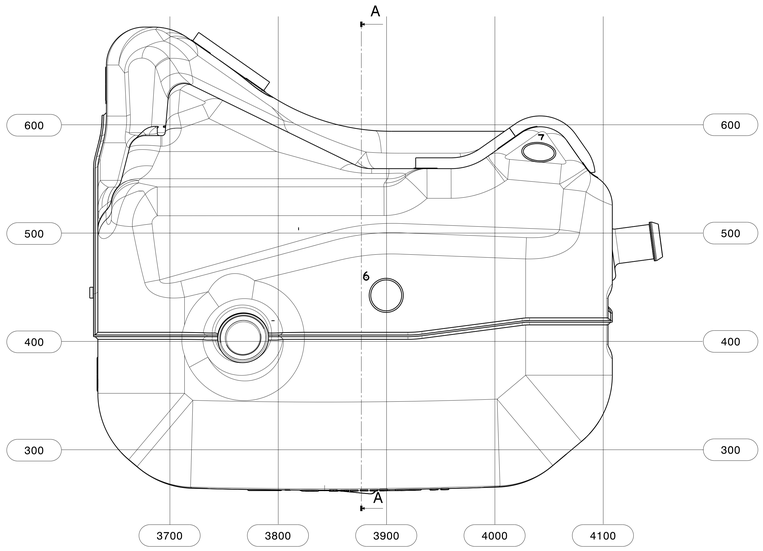


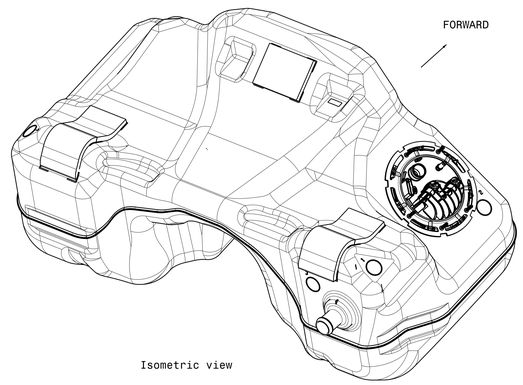


Isometric view

| DIMENSION | | TOLERANCE |
|---|---|---|
| OVER | UPTO | +/- |
| 0 | 127 | 2 |
| 127.1 | 254 | 3 |
| 254.1 | 508 | 4 |
| 508.1 | OVER | 5 |

| | | | |
|---|---|---|---|
| DRAWING | BJ32-9K007-AH | REV 16 | SHT 2 OF 3 |
| CAD FILE BJ32-9K007-A-DWG-01 | JAGUAR LAND ROVER LIMITED | | |

PRINTED COPIES ARE UNCONTROLLED

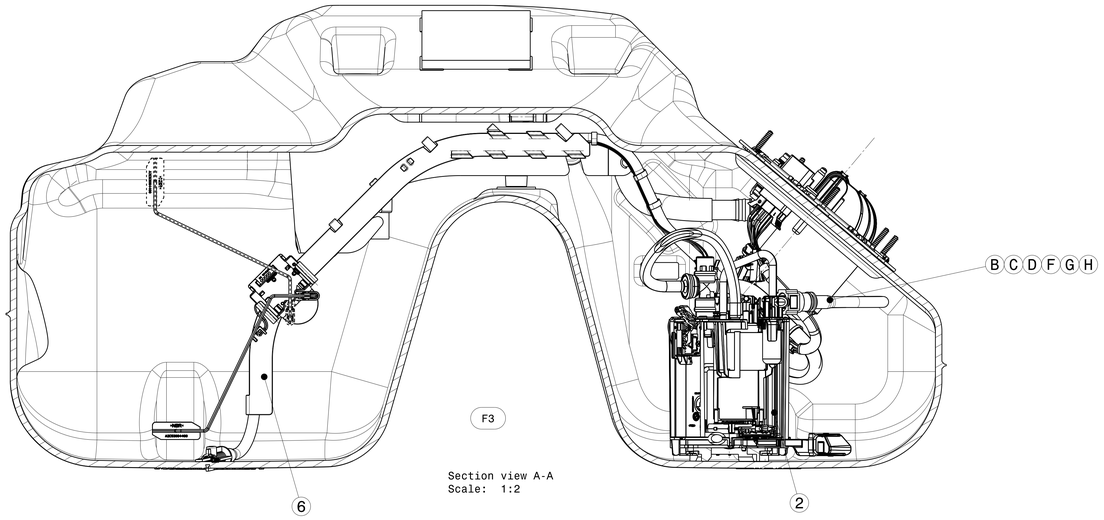


Section view A-A
Scale: 1:2

WHEN FITTED, ENSURE ITEM 6
IS HELD BY THE RETENTION LATCH
FEATURE ON THE INTERNAL BRKT

TANK INTERNAL CONNECTIONS

| | ITEM No | CONNECTION DESCRIPTION |
|---|---|---|
| ★ | A | SDR & PMP ASY-FU/TNK TO BAYONET (FDM TO BAYONET) |
| ★ | B | SDR & OLET TUB ASY FU/TNK TO SDR & PMP ASY FU/TNK (SUCKING JET TO FDM) |
| ▽ | C | SDR & PMP ASY FEED TO FLNG FU/TNK SDR & OLET TUB MTG (FEED TO FLANGE) |
| ★ | D | SDR & PMP ASY ELECTRICAL CONNECTOR TO FLNG FU/TNK SDR & OLET TUB MTG (ELECTRICAL CONNECTOR TO FLANGE) |
| ★ | E | BREATHER TO FLANGE |
| ★ | F | SDR + PUMP ASY EARTH ELECTRICAL CONNECTOR TO PUMP ASSY FLANGE (PUMP TO FLANGE) |
| ★ | G | ELECTRICAL FLYLEAD TO BRKT (PASSIVE MAPPS) |
| ★ | H | ELECTRICAL FLYLEAD TO FDM (PASSIVE MAPPS) |

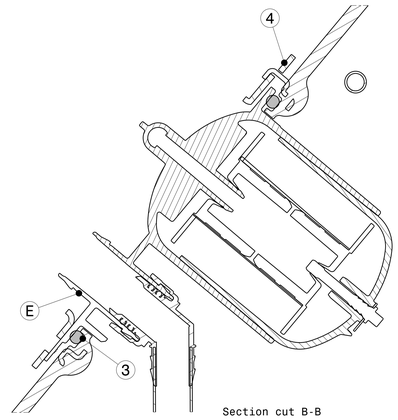


Section cut B-B
Scale: 1:1

SECTION THROUGH TANK, FLANGE, SEAL,
ENCAPSULATED RING AND LOCKING RING

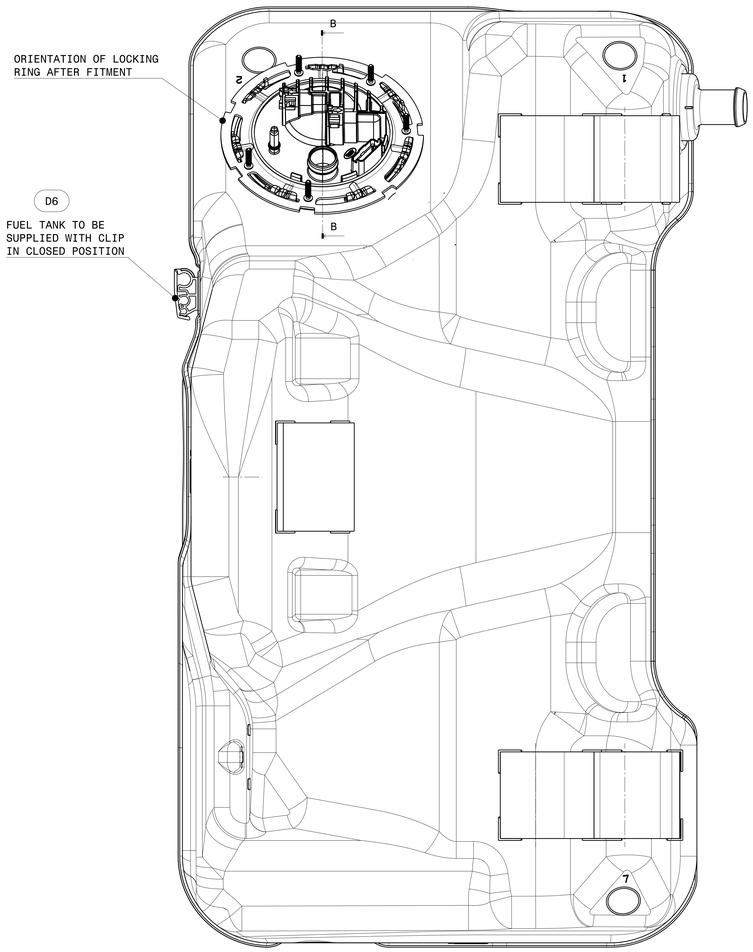


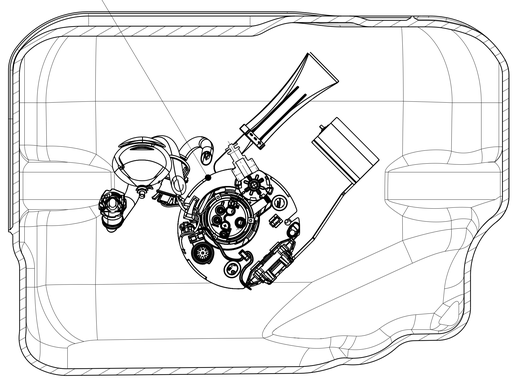


Section view C-C
Scale: 1:2

| DRAWING | REV | SHT 3 |
|---|---|---|
| BJ32-9K007-AH | 16 | OF 3 |
| CAD FILE BJ32-9K007-A-DWG-01 | JAGUAR LAND ROVER LIMITED | |

PRINTED COPIES ARE UNCONTROLLED

NOTES:

* REFER TO SUPPLEMENT K DOCUMENT AND CRT

THIS ASSEMBLY MUST COMPLY WITH THE REQUIREMENTS OF ENGINEERING SPECIFICATION ES 3U5A-9002-BB, EXCEPT FOR THE SECTION 3.6 CONTAMINATION WHERE NOTE BELOW APPLIES.

THIS ASSY MUST COMPLY WITH THE REQUIREMENTS OF ENGINEERING SPECIFICATION FTDVPX250.10

LOCKING RING TO MEET THE REQUIREMENTS OF SAE J2587.

COMPONENT TO BE MARKED IN LINE WITH FORD MOTOR COMPANY ENGINEERING CAD & DRAFTING STANDARD E-3.
COMPONENT TO COMPLY WITH THE IDENTIFICATION OF FORD MOTOR COMPANY ENGINEERING CAD & DRAFTING STANDARD E-4 FOR POLYMERIC MATERIALS.

GROSS CAPACITY - 79.55 LITRES

EMPTY TO DESIGN CUT OFF - 71.1 LITRES

USABLE CAPACITY - 69.5 LITRES

WEIGHT OF FUEL TANK ASSEMBLY - 12.550Kg ± 0.5Kg

* TOTAL INTERNAL DEBRIS MUST NOT EXCEED 4.0mg WHEN TESTED TO LRLTM 30.IC101 OR SIMILAR APPROVED METHOD.
THE MAXIMUM PERMISSIBLE PARTICLE SIZE MUST NOT EXCEED 400 microns/0.6mg WHEN MEASURED IN ACCORDANCE WITH LRLTM 30.DD.103.

FOR CURRENT RELEASE STATUS SEE WERS ENGINEERING NOTICE.

THIS ASSEMBLY IS TO CONFORM TO THE GPDS REQUIREMENTS OF THE RELEVANT FORD AND JAGUAR / LAND ROVER SPECIFICATIONS CONTAINED IN THE DESIGN VERIFICATION PLAN LATEST ISSUE.

AS SUPPLIER TO JAGUAR / LAND ROVER COMPONENT MUST BE FREE INTERNALLY FROM THE FOLLOWING:-
- ALL MANUFACTURING AND PROCESS TEST FLUIDS.
- ALL IN PROCESS PRESSURE TEST FLUIDS.
- ALL MANUFACTURING DEBRIS, SWARF OR WELD SPATTER.
-WATER, DIRT OR DUST INGRESS.

FULL TRACEABILITY TO BE INDELIBLY MARKED / LABELLED ON THIS ASSEMBLY WITH REGARD TO YEAR, MONTH, DAY, TIME, ASSEMBLY LINE TEST DATA AND CRITICAL SECOND TIER SUPPLIER COMPONENTS ie FUEL DELIVERY MODULE AND SENDER(S).

THIS ASSEMBLY IS TO MEET THE LEGISLATIVE REQUIREMENTS OF ECE34, ECE34 ANNEX 5 AND EEC DIRECTIVE 70/221, CHINA FUEL TANKS.

▽ 100% LEAK TEST: PRESSURE DIFFERENTIAL TEST USING 100% HELIUM. LEAK RATE TO BE LESS THAN 1.4 x $10^{-5}$ l/s AT 140 mbar DIFFERENTIAL PRESSURE.
AFTER LEAK TESTING NO PART TO BE REMOVED OR CHANGED WITHOUT RETESTING.

▽ 100% FUEL PUMP MODULE AND SENDER UNIT AND TANK VALVE FUNCTIONALITY TESTS TO BE CARRIED OUT IN LINE WITH PROCESS CONTROL DOCUMENTS AGREED WITH JAGUAR/LANDROVER PRODUCT ENGINEERING AND STA DEPARTMENTS.

▽ PUMP START TEST - MEDIUM AIR, VOLTAGE 6+/-0.1V.
MEASURING TIME 1<t<5 SECS.
CURRENT <4A. MAX 2 TESTS.

▽ ACTIVE SENDER UNIT ROLL OVER TEST TO CONFORM -
SENDER FLOAT POSITION EMPTY RESISTANCE VALUE WITHIN TOLERANCE 51.2±1
SENDER FLOAT POSITION FULL RESISTANCE VALUE WITHIN TOLERANCE 992±10.5
SENDER FLOAT BACK TO EMPTY RESISTANCE VALVE WITHIN TOLERANCE 51.2±1

▽ PASSIVE SENDER UNIT ROLL OVER TEST TO CONFORM -
SENDER FLOAT POSITION EMPTY RESISTANCE VALUE WITHIN TOLERANCE: 51.2±1Ω
SENDER FLOAT POSITION FULL RESISTANCE VALUE WITHIN TOLERANCE: 445±25Ω
SENDER FLOAT POSITION BACK TO EMPTY RESISTANCE VALUE WITHIN TOLERANCE: 51.2±1Ω

FOR ELECTRICAL CONNECTOR PIN OUT INFORMATION REFER TO DRAWING 9X23-9A309-A LATEST ISSUE.

FUEL TANK GASKET TO BE CLEAN AND FREE FROM ANY SURFACE IMPERFECTION THAT MAY BE DETRIMENTAL TO ITS SEALING INTEGRITY.

REFER TO FUEL TANK ASSY STOWAGE POSITION DOCUMENT FOR DELIVERED CONDITION TO CASTLE BROMWICH ASSY PLANT.

▽ 100% TANK VENT SYSTEM - VACUUM TEST
ROLL TANK OVER 180° FROM NORMAL VEHICLE FITTED POSITION.
APPLY A VACUUM OF AT LEAST - 150mb.
APPLY THE VACUUM AT THE BREATHER STUB CONNECTION.
EVACUATION TIME 5 SECS MINIMUM.
STABILISATION TIME 10 SECS MINIMUM.
LEAK CHECK FOR 20 SECS MINIMUM.
LEAK RATE TO BE <50ccm.
RELEASE VACUUM, ROLL BACK TO NORMAL VEHICLE FITTED POSITION.

ALL INTERNAL & EXTERNAL CONNECTIONS TO BE 100% VERIFIED.

▽ TORQUE FIGURES TO BE 100% MONITORED AND RECORDED ON AN AUDIT SYSTEM - ITEM 4 TIGHTEN CAM LOCK TO CLOSURE STOP. TORQUE TO ACHIEVE THIS 250Nm ±20Nm ANGULAR ROTATION START AND FINISH TO BE MONITORED DURING ASSEMBLY. ANGULAR ROTATION 17.3°.

ALL FUEL LINES AND TANK OPENINGS AS DESIGNATED TO BE CAPPED DURING ASSEMBLY, TRANSPORT AND STORAGE. CAP(S) MUST PROTECT ANY SEALING SURFACE AND MUST REMAIN EFFECTIVE FOR PROLONGED STORAGE. CAP(S) MUST EASILY BE REMOVED WITHOUT THE USE OF TOOLS. IT MUST NOT BE POSSIBLE TO FIT ASSEMBLY TO MATING COMPONENTS WITH CAP(S) STILL IN PLACE.

* NO LUBRICANT TO BE USED DURING THE MANUFACTURE OF PARTS OR ASSEMBLY OF PARTS UNLESS AUTHORISED BY JLR MATERIALS AND FUEL SYSTEM ENGINEERING DEPARTMENTS.

COMPONENT TO BE STOWED, PALLETISED, TRANSPORTED AND STORED SUCH THAT NO DISTORTION OF FORM, INTERNAL OR EXTERNAL DAMAGE OR DIRT INGRESS CAN OCCUR TO THE ASSEMBLY.

ASSEMBLY TO BE FREE FROM FLASH, BURRS, SHARP EDGES AND ANY OTHER IMPERFECTIONS THAT MAY CAUSE INJURY DURING HANDLING OR THAT WOULD BE DETRIMENTAL TO ITS ASSEMBLY OR PERFORMANCE.

CHANGES AFFECTING DESIGN, COMPOSITION OR PROCESSING TO THE ASSEMBLY OR SUB COMPONENTS PREVIOUSLY APPROVED FOR PRODUCTION REQUIRE PRIOR APPROVAL FROM JLR PRODUCT ENGINEERING. REFER TO QS9000.

ENGINEERING APPROVAL OF A MINIMUM OF SIX SAMPLES FROM EACH SUPPLIER IS REQUIRED PRIOR TO FIRST SHIPMENT OF PARTS FOR INITIAL RELEASE AND FOR SUBSEQUENT CHANGE REQUESTS.

UNLESS OTHERWISE SPECIFIED ALL LINES AND SURFACES, SAME SIDE OF MATERIAL AS DATUM.

ALL SEALING SURFACES TO BE CLEAN AND FREE FROM ANY SURFACE IMPERFECTIONS (INCLUDING) HOLES, SPOTS, DENTS, FLASH AND OFFSET MOULDING LINES.

AFTER ASSEMBLY ALL HOSES, PIPES TO BE FREE FROM KINKS.

DO NOT USE HOSES / PIPES ATTACHED TO THIS ASSEMBLY TO REMOVE FROM STILLAGE OR CARRY COMPONENT.

ALL PROTECTIVE CAPS TO BE REMOVED, AND LINES AND ELECTRICAL CONNECTOR TO BE UNSTOWED PRIOR TO ASSEMBLY OF COMPONENT TO VEHICLE.

TEST CERTIFICATION LABEL / FINISHED GOODS LABEL -
- DATE OF FINAL ASSEMBLY
- TIME OF FINAL ASSEMBLY
- SEQUENTIAL ID NUMBER. (WHICH CORRELATES AGAINST CAQ DATA)
- PRODUCT DESCRIPTION & VARIENT INFORMATION
- PART NUMBER

IT IS THE RESPONSIBILITY OF THE COMPONENT / ASSEMBLY MANUFACTURER TO ENSURE THAT THE COMPONENT / ASSEMBLY MEETS THE REQUIREMENTS OF THE CHINESE PARTS MARKING - CCC

IT IS ALSO THE RESPONSIBILITY OF THE COMPONENT / ASSEMBLY MANUFACTURER TO ENSURE THAT COPIES OF APPROVAL CERTIFICATES FOR BOTH THE ASSEMBLY PLANT AND THE COMPONENT / ASSEMBLY MUST BE FORWARDED TO THE RELEVANT JLR REPRESENTATIVE UPON ISSUE FROM THE CHINESE AUTHORITIES

SERVICE NOTE:
IF ITEM 8 FLNG FU/TNK SDR & OLET TUB MTNG (FLANGE) IS REMOVED OR DISTURBED IN SERVICE A NEW GSKT FU/TNK SDR ITEM 3 MUST BE USED. REFER TO SHEET 3 FOR CORRECT ORIENTATION REPLACEMENT OF ITEM 4 RG - FU/TNK.

**▽ CONTROL ITEM - THE ▽ ALSO IDENTIFIES CRITICAL CHARACTERISTICS DESIGNATED BY THE CROSS FUNCTIONAL TEAMS DEVELOPING THE PRODUCT. THESE AND ADDITIONAL CRITICAL CHARACTERISTICS IDENTIFIED BY PROCESS REVIEWS MUST APPEAR ON THE CONTROL PLANS ACCORDING TO QS-9000. THESE CONTROL PLANS REQUIRE PRODUCT ENGINEERING APPROVAL.**

FEDERAL FUEL TANK TOP LEVEL ASSEMBLY

| LTRS | REVISIONS | | |
|---|---|---|---|
| ORIGINATOR | CHECKER | ENGR APP | MATL APP |
| RELEASE OF CX23-9K007-AA<br>UEP2 E 50010079 000 | | 20110216 | |
| PMANNER2 | COAG | KWILKIN6 | MATSENG |
| RELEASE OF CX23-9K007-AB<br>DRAWING UPDATE ONLY<br>UEP2 E 50014593 000 | | 20110518 | |
| PMANNER2 | COAG | KWILKIN6 | MATSENG |
| RELEASE OF CX23-9K007-AC<br>C1 ITEM 1 WAS 9X23-9002-AH<br>C2 ITEM 2 WAS 9X23-9H307-AD<br>C3 ITEM 8 WAS 9X23-9A309-AD<br>C4 ITEM 10 WAS 9X23-9S305-AA<br>UEP2 E 50021941 000 | | 20111015 | |
| VKAMATH | PREDHEAD | PWADSWOR | MATSENG |

| | | | |
|---|---|---|---|
| REFERENCE | | DS-X250-100100-C810-32 | |
| PART MUST COMPLY WITH RESTRICTED SUBSTANCE MANAGEMENT STANDARD WSS-M99P9999-A1 TO SAFEGUARD HEALTH, SAFETY AND THE ENVIRONMENT | | | |
| DRAFTED IN ACCORDANCE WITH FORD MOTOR COMPANY ENGINEERING CAD AND DRAFTING STANDARDS VERSION 17.0 | | 3RD ANGLE PROJ<br>DIMENSIONS ARE IN MILLIMETERS | |
| CAD TYPE<br>K-CATIA5 | CAD LOC.<br>TCE | CAD FILE<br>CX23-9K007-A-DWG-01 ;4 | DTMC<br>IS MASTER |
| OPER. NO.<br>N/A | UNIT<br>N/A | DRAWING<br>CX23-9K007-AC | |
| DESIGN<br>PMANNER2 | DETAIL<br>PMANNER2 | TITLE<br>TNK & SDR ASY FUL | SHT 1<br>OF 3 |
| CHECKED<br>COAG | SAFETY<br>N/A | | |
| SCALE<br>1:1 | DATE<br>20110216 | DIVISION JAGUAR<br>PLANT GAYDON | |

JAGUAR CARS LIMITED — LAND ROVER

PRINTED COPIES ARE UNCONTROLLED

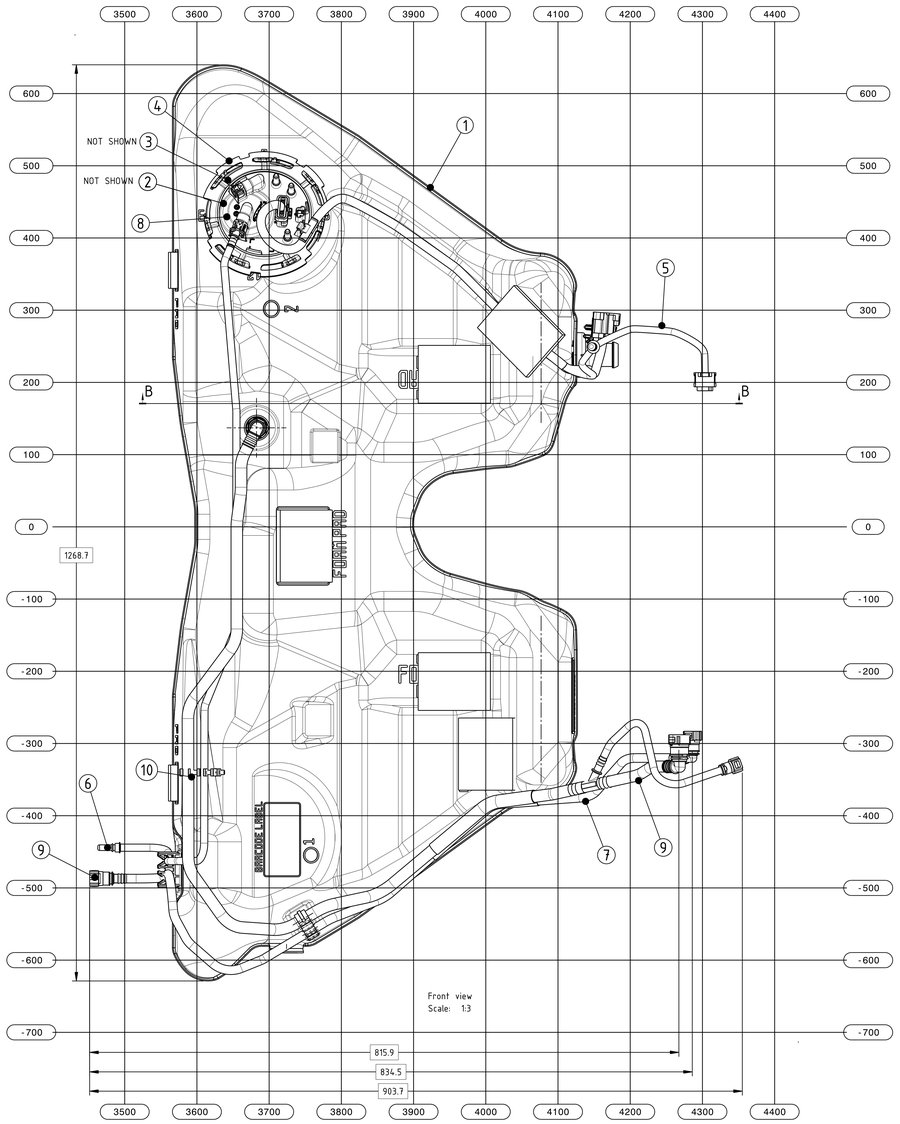


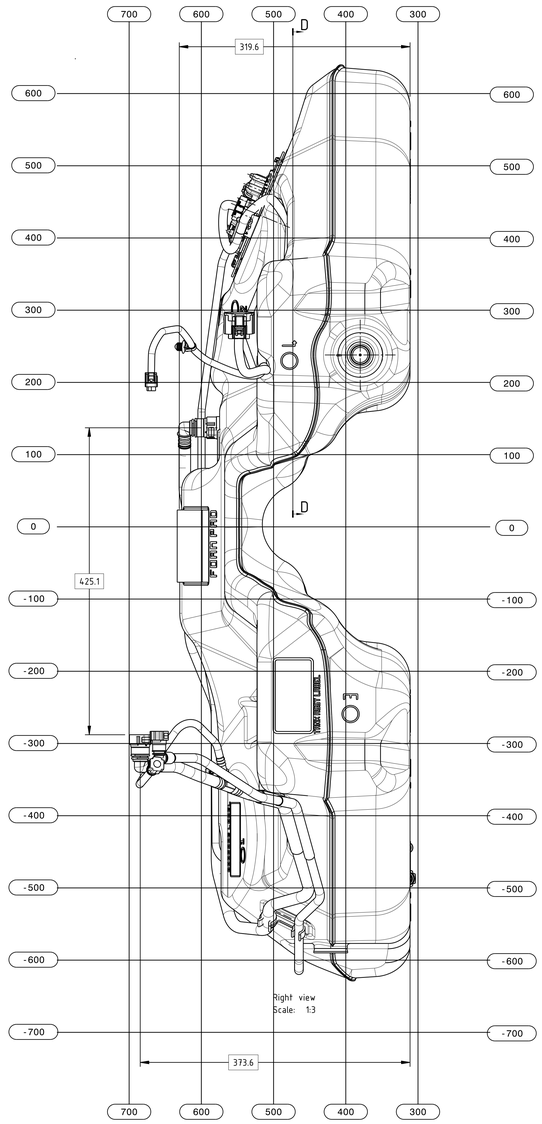


| | ITEM | PART NUMBER | DESCRIPTION | QUANTITY |
|---|---|---|---|---|
| C1 | 1 | 9X23-9002-AJ | TNK ASY FUL | 1 |
| C2 | 2 | 9X23-9H307-AE | SDR & PMP ASY-FU/TNK | 1 |
| | 3 | 6H52-9276-AA | GSKT-FU/TNK SDR | 1 |
| | 4 | 9X23-9C385-AA | RG-FU/PMP RET LK | 1 |
| | 5 | CX23-14407-AB | HARNESS (PETROL) | 1 |
| | 6 | 9X23-9327-AB | HOS ASY FUL TUB RR | 1 |
| | 7 | 9X23-9A186-AB | PIP-FU/TNK VEN RR LH | 1 |
| C3 | 8 | 9X23-9A309-AE | FLNG FU/TNK SDR & OLET TUB MTNG | 1 |
| | 9 | 9X23-9C047-AC | TUB ASY FU/VPR CONTR VLV | 1 |
| C4 | 10 | CX23-9S305-AA | CLP-FU/VPR TUB | 1 |

| DIMENSION | | TOLERANCE |
|---|---|---|
| OVER | UPTO | +/- |
| 0 | 127 | 2 |
| 127.1 | 254 | 3 |
| 254.1 | 508 | 4 |
| 508.1 | OVER | 5 |

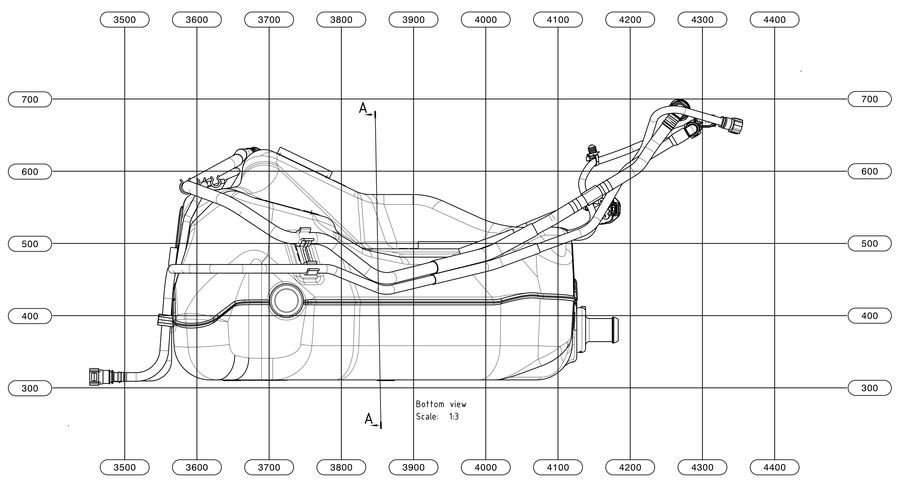


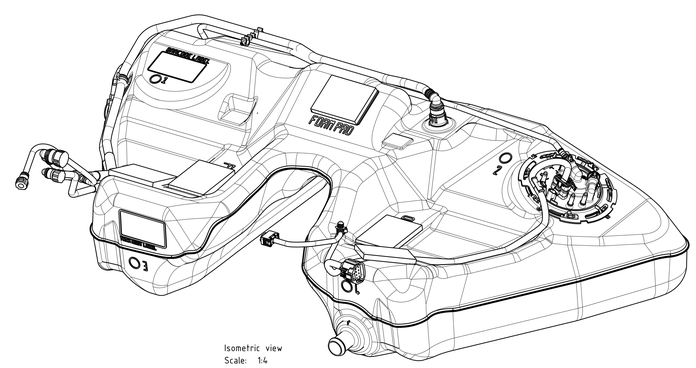


FEDERAL FUEL TANK TOP LEVEL ASSY

| DRAWING | REV | SHT |
|---|---|---|
| CX23-9K007-AC | 4 | 2 OF 3 |

CAD FILE CX23-9K007-A-DWG-01

JAGUAR CARS LIMITED — LAND ROVER

PRINTED COPIES ARE UNCONTROLLED

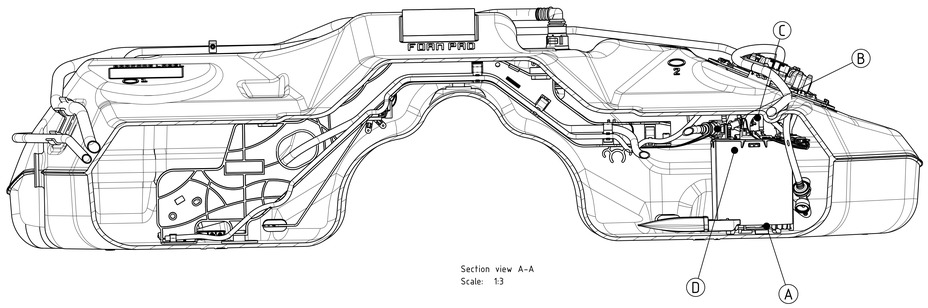


Section view A-A
Scale: 1:3

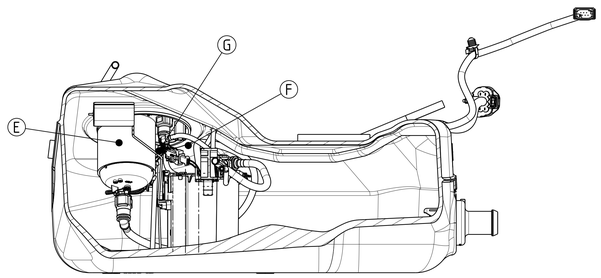


Section view B-B
Scale: 1:3

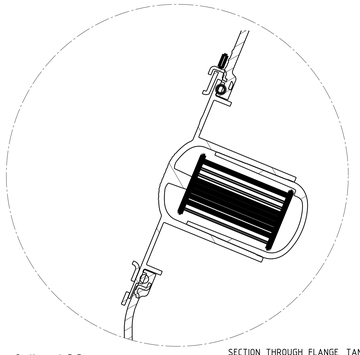

Section cut E-E
Scale: 2:3

SECTION THROUGH FLANGE, TANK, SEAL, ENCAPSULATED RING AND LOCKING RING.

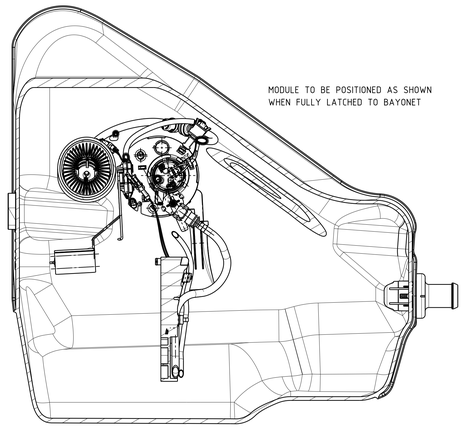


Section view D-D
Scale: 1:3

LOCKING RING ROTATION FROM START TO LATCHED POSITION 17°30' +15°/-0°

ORIENTAION LOCKING RING AFTER FITMENT

ITEMS 5,6 & 7 OMITTED FOR CLARITY

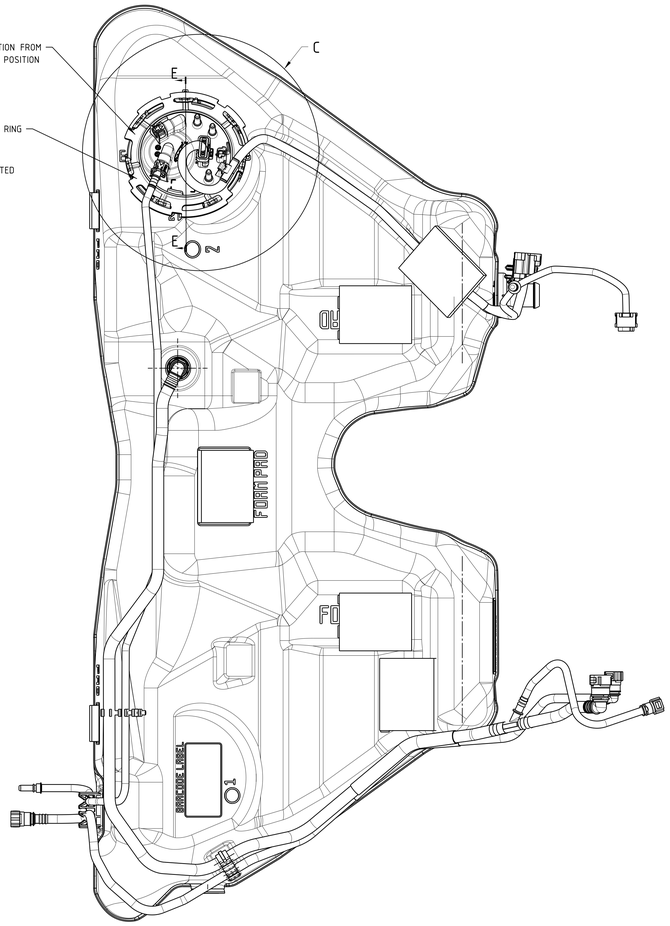


Front view
Scale: 1:3

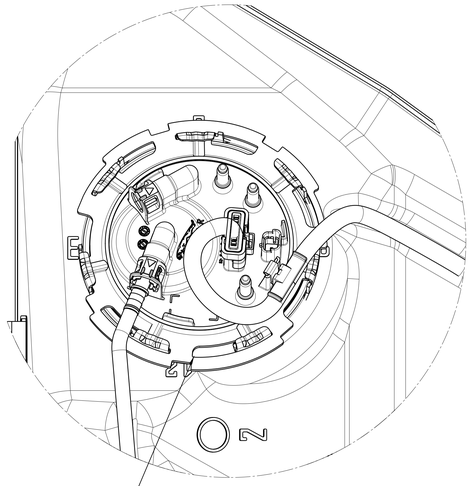

* FLANGE TAB TO BE LOCATED IN THIS ORIENTATION

Detail C
Scale: 2:3

ITEMS 4,5,6 AND 7 ARE OMITTED FOR CLARITY

TANK INTERNAL CONNECTIONS

| | ITEM No | CONNECTION DESCRIPTION |
|---|---|---|
| * | A | SDR & PMP ASY PETROL TO BAYONET |
| * | B | VPR & BRKT ASY-FUL VENTURI TO SDR & PMP ASY |
| * | C | SDR & PMP ASY ELECTRICAL CONNECTOR TO VPR & BRKT ASY-FUL ELECTICAL CONNECTOR |
| ▽ | D | SDR & PMP FEED LINE CONNECTION TO FLNG FU/TNK SDR & OLET TUB MTNG |
| * | E | VPR & BRKT ASY-FUL DRAIN TUBE TO SDR & PMP ASY FLANGE |
| * | F | SDR & PMP ASY EARTH ELECTRICAL CONNECTOR TO SDR & PMP ASY FLANGE |
| * | G | SDR & PMP ASY ELECTRICAL CONNECTOR TO SDR & PMP ASY FLANGE |

# FEDERAL FUEL TANK TOP LEVEL ASSY

| | | | |
|---|---|---|---|
| DRAWING | CX23-9K007-AC | REV 4 | SHT 3 OF 3 |
| CAD FILE CX23-9K007-A-DWG-01 | JAGUAR CARS LIMITED LAND ROVER | | |

PRINTED COPIES ARE UNCONTROLLED

NOTES:

* REFER TO SUPPLIER CRT DOCUMENT FOR FURTHER INFORMATION.

THIS ASSEMBLY MUST COMPLY WITH THE REQUIREMENTS OF ENGINEERING SPECIFICATION ES 3U5A-9002-BB, DATED 12 MAY 04 EXCEPT FOR THE SECTION 3.6 CONTAMINATION WHERE NOTE BELOW APPLIES.

LOCKING RING TO MEET THE REQUIREMENTS OF SAE J2587.

COMPONENT TO BE MARKED IN LINE WITH FORD MOTOR COMPANY ENGINEERING CAD & DRAFTING STANDARD E-3.
COMPONENT TO COMPLY WITH THE IDENTIFICATION OF FORD MOTOR COMPANY ENGINEERING CAD & DRAFTING STANDARD E-4 FOR POLYMERIC MATERIALS.

GROSS CAPACITY - 92 LITRES

EMPTY TO DESIGN CUT OFF -82 LITRES

USABLE CAPACITY - 80 LITRES

WEIGHT OF FUEL TANK ASSEMBLY - 18kg ± 0.5kg

TOTAL INTERNAL DEBRIS MUST NOT EXCEED 4.0mg WHEN TESTED TO
* LRLTM 30.IC101 OR SIMILAR APPROVED METHOD.
THE MAXIMUM PERMISSIBLE PARTICLE SIZE MUST NOT EXCEED 400 microns/0.6mg WHEN MEASURED IN ACCORDANCE WITH LRLTM 30.DD.103.

FOR CURRENT RELEASE STATUS SEE WERS ENGINEERING NOTICE.

THIS ASSEMBLY IS TO CONFORM TO THE GPDS REQUIREMENTS OF THE RELEVANT FORD AND JAGUAR / LAND ROVER SPECIFICATIONS CONTAINED IN THE DESIGN VERIFICATION PLAN LATEST ISSUE X351 10MY.

AS SUPPLIER TO JAGUAR / LAND ROVER COMPONENT MUST BE FREE INTERNALLY FROM THE FOLLOWING:-
- ALL MANUFACTURING AND PROCESS TEST FLUIDS.
- ALL IN PROCESS PRESSURE TEST FLUIDS.
- ALL MANUFACTURING DEBRIS, SWARF OR WELD SPATTER.
-WATER, DIRT OR DUST INGRESS.

FULL TRACEABILITY TO BE INDELIBLY MARKED / LABELLED ON THIS ASSEMBLY WITH REGARD TO YEAR, MONTH, DAY, TIME, ASSEMBLY LINE TEST DATA AND CRITICAL SECOND TIER SUPPLIER COMPONENTS ie FUEL DELIVERY MODULE AND SENDER(S).

BIRTH CERTIFICATION LABEL -
DATE OF CARCASS BLOW MOULD
TIME OF CARCASS BLOW MOULD
SEQUENTIAL CARCASS ID NUMBER
PRODUCT GENERIC IDENTIFICATION

THIS ASSEMBLY IS TO MEET THE LEGISLATIVE REQUIREMENTS OF ECE34, ECE34 ANNEX 5 AND EEC DIRECTIVE 70/221, CHINA FUEL TANKS.

▽ 100% LEAK TEST: PRESSURE DIFFERENTIAL TEST USING 100% HELIUM. LEAK RATE TO BE LESS THAN 1.4 x 10-5 mbar 1/s AT 140mb DIFFERENTIAL PRESSURE AFTER LEAK TESTING NO PART TO BE REMOVED OR CHANGED WITHOUT RETESTING.

▽ 100% FUEL PUMP MODULE AND SENDER UNIT AND TANK VALVE FUNCTIONALITY TESTS TO BE CARRIED OUT IN LINE WITH PROCESS CONTROL DOCUMENTS AGREED WITH JAGUAR/LANDROVER PRODUCT ENGINEERING AND STA DEPARTMENTS.

▽ PUMP START TEST - MEDIUM AIR, VOLTAGE 6+/-0.1V.
MEASURING TIME 1<t<5 SECS.
CURRENT <4A. MAX 2 TESTS.

SENDER UNIT(S) ROLL OVER TEST TO CONFORM -
SENDER FLOAT POSITION EMPTY RESISTANCE VALUE WITHIN TOLERANCE: 51.2±1 Ω
▽ SENDER FLOAT POSITION FULL RESISTANCE VALUE WITHIN TOLERANCE: 992±10.5 Ω
SENDER FLOAT POSITION BACK TO EMPTY RESISTANCE VALUE WITHIN TOLERANCE: 51.2±1 Ω

FOR ELECTRICAL CONNECTOR PIN OUT INFORMATION REFER TO DRAWING DX23-9H307-A* LATEST ISSUE.

FUEL TANK GASKET TO BE CLEAN AND FREE FROM ANY SURFACE IMPERFECTION THAT MAY BE DETRIMENTAL TO ITS SEALING INTEGRITY.

REFER TO FUEL TANK ASSY STOWAGE POSITION DOCUMENT FOR DELIVERED CONDITION TO CASTLE BROMWICH ASSY PLANT.

LEVII HYDROCARBON EMISSIONS REQUIREMENT FOR THIS ASSEMBLY TO BE <60mg/DAY WITH A TARGET OF 40mg/DAY

IT IS THE RESPONSIBILITY OF THE COMPONENT/ASSEMBLY MANUFACTURER TO ENSURE THAT THE COMPONENT/ASSEMBLY MEETS THE REQUIREMENTS OF CHINESE PARTS MARKING -CCC. IT IS ALSO THE RESPONSIBILITY OF THE COMPONENT/ASSEMBLY MANUFACTURER TO ENSURE THAT COPIES OF APPROVAL CERTIFICATES FOR THE ASSEMBLY PLANT AND COMPONENT/ASSEMBLY ARE FORWARDED TO THE RELEVANT JLR REPRESENTATIVE UPON ISSUE FROM THE CHINESE AUTHORITIES.

▽ 100% TANK VENT SYSTEM - VACUUM TEST
ROLL TANK OVER 180° FROM NORMAL VEHICLE FITTED POSITION.
APPLY A VACUUM OF AT LEAST - 150mb.
APPLY THE VACUUM AT THE BREATHER STUB CONNECTION.
EVACUATION TIME 5 SECS MINIMUM.
STABILISATION TIME 10 SECS MINIMUM.
LEAK CHECK FOR 20 SECS MINIMUM.
LEAK RATE TO BE <50ccm.
RELEASE VACUUM, ROLL BACK TO NORMAL VEHICLE FITTED POSITION.
ENSURE VALVE HAS RE-OPENED

ALL INTERNAL & EXTERNAL CONNECTIONS TO BE 100% VERIFIED.

TORQUE FIGURES TO BE 100% MONITORED AND RECORDED ON AN AUDIT
▽ SYSTEM - ITEM 4 TIGHTEN CAM LOCK TO CLOSURE STOP. TORQUE TO ACHIEVE THIS 250Nm ±20Nm ANGULAR ROTATION START AND FINISH TO BE MONITORED DURING ASSEMBLY. ANGULAR ROTATION 17.3°.

▽ TORQUE FIGURE FOR ITEM 13 - 7Nm ± 1Nm

ALL FUEL LINES AND TANK OPENINGS AS DESIGNATED TO BE CAPPED DURING ASSEMBLY, TRANSPORT AND STORAGE. CAP(S) MUST PROTECT ANY SEALING SURFACE AND MUST REMAIN EFFECTIVE FOR PROLONGED STORAGE. CAP(S) MUST EASILY BE REMOVED WITHOUT THE USE OF TOOLS. IT MUST NOT BE POSSIBLE TO FIT ASSEMBLY TO MATING COMPONENTS WITH CAP(S) STILL IN PLACE.

DUST CAPS TO BE PRESENT ON ICV AND FUEL FEED LINES

NO LUBRICANT TO BE USED DURING THE MANUFACTURE OF PARTS OR
* ASSEMBLY OF PARTS UNLESS AUTHORISED BY JLR MATERIALS AND FUEL SYSTEM ENGINEERING DEPARTMENTS.

COMPONENT TO BE STOWED, PALLETISED, TRANSPORTED AND STORED SUCH THAT NO DISTORTION OF FORM, INTERNAL OR EXTERNAL DAMAGE OR DIRT INGRESS CAN OCCUR TO THE ASSEMBLY.

ASSEMBLY TO BE FREE FROM FLASH, BURRS, SHARP EDGES AND ANY OTHER IMPERFECTIONS THAT MAY CAUSE INJURY DURING HANDLING OR THAT WOULD BE DETRIMENTAL TO ITS ASSEMBLY OR PERFORMANCE.

CHANGES AFFECTING DESIGN, COMPOSITION OR PROCESSING TO THE ASSEMBLY OR SUB COMPONENTS PREVIOUSLY APPROVED FOR PRODUCTION REQUIRE PRIOR APPROVAL FROM JLR PRODUCT ENGINEERING. REFER TO QS9000.

ENGINEERING APPROVAL OF A MINIMUM OF SIX SAMPLES FROM EACH SUPPLIER IS REQUIRED PRIOR TO FIRST SHIPMENT OF PARTS FOR INITIAL RELEASE AND FOR SUBSEQUENT CHANGE REQUESTS.

UNLESS OTHERWISE SPECIFIED ALL LINES AND SURFACES, SAME SIDE OF MATERIAL AS DATUM.

ALL SEALING SURFACES TO BE CLEAN AND FREE FROM ANY SURFACE IMPERFECTIONS (INCLUDING) HOLES, SPOTS, DENTS, FLASH AND OFFSET MOULDING LINES.

AFTER ASSEMBLY ALL HOSES, PIPES TO BE FREE FROM KINKS.

DO NOT USE HOSES / PIPES ATTACHED TO THIS ASSEMBLY TO REMOVE FROM STILLAGE OR CARRY COMPONENT.

ALL PROTECTIVE CAPS TO BE REMOVED, AND LINES TO BE UNSTOWED PRIOR TO ASSEMBLY OF COMPONENT TO VEHICLE.

TEST CERTIFICATION LABEL / FINISHED GOODS LABEL -
- DATE OF FINAL ASSEMBLY
- TIME OF FINAL ASSEMBLY
- SEQUENTIAL ID NUMBER. (WHICH CORRELATES AGAINST CAQ DATA)
- PRODUCT DESCRIPTION & VARIENT INFORMATION
- PART NUMBER

SERVICE NOTE:
IF ITEM 11 FLNG FU/TNK SDR & OLET TUB MTNG (FLANGE) IS REMOVED OR DISTURBED IN SERVICE A NEW GSKT FU/TNK SDR ITEM 3 MUST BE USED. REFER TO SHEET 3 FOR CORRECT ORIENTATION REPLACEMENT OF ITEM 4 RG - FU/TNK.

▽ CONTROL ITEM - THE ▽ ALSO IDENTIFIES CRITICAL CHARACTERISTICS DESIGNATED BY THE CROSS FUNCTIONAL TEAMS DEVELOPING THE PRODUCT. THESE AND ADDITIONAL CRITICAL CHARACTERISTICS IDENTIFIED BY PROCESS REVIEWS MUST APPEAR ON THE CONTROL PLANS ACCORDING TO QS-9000. THESE CONTROL PLANS REQUIRE PRODUCT ENGINEERING APPROVAL.

| LTRS | REVISIONS | | |
|---|---|---|---|
| ORIGINATOR | CHECKER | ENGR APP | MATL APP |
| RELEASE OF DW93-9K007-AA<br>UEP2 E 50024858 000 120216 | | | |
| PMORGA65 | AWHITEMA | GVOICE | MATSENG |
| RELEASE OF DW93-9K007-AB<br>B1. ITEM 1 WAS DW93-9002-AA<br>B2. ITEM 2 WAS DX23-9H307-AA<br>B3. ITEM 10 WAS DW93-9275-AA<br>UEP2 E 50036082 000 120605 | | | |
| HHERUR | PVOKES | GVOICE | MATSENG |
| RELEASE OF DW93-9K007-AC<br>C1. ITEM 4 WAS AW93-9C385-AB<br>C2. ITEM 9 WAS W707828<br>C3. ITEM 12 REMOVED<br>C4. ITEM 13 WAS W520411-S439<br>UEP2 E 50044698 000 20121203 | | | |
| HJAYARAM | PVOKES | GVOICE | MATSENG |

| | | | |
|---|---|---|---|
| REFERENCE | DS-X351-100100-C810-24 & 25 | | |
| PART MUST COMPLY WITH RESTRICTED SUBSTANCE MANAGEMENT STANDARD STJLR.99.9999 TO SAFEGUARD HEALTH, SAFETY AND THE ENVIRONMENT | | | |
| DRAFTED IN ACCORDANCE WITH JAGUAR LAND ROVER PLM STANDARDS CURRENT AT INITIAL RELEASE | | 3RD ANGLE PROJ DIMENSIONS ARE IN MILLIMETRES | |
| CAD TYPE K-CATIA5 | CAD LOC. TCe | CAD FILE DW93-9K007-A-DWG-01 REV ;3 | DTMC IS MASTER |
| DESIGN PMORGA65 | DETAIL PMORGA65 | DRAWING DW93-9K007-AC | SHT 1 OF 3 |
| CHECKED AWHITEMA | SAFETY N/A | TITLE TNK & SDR ASY FUL | RH/LH SHOWN |
| SCALE 1:1 | DATE 120216 | | SIZE A1 |

JAGUAR CARS LIMITED — LAND ROVER

# FEDERAL FUEL TANK TOP LEVEL ASSY - 13MY

DO NOT SCALE FROM DRAWING — PRINTED COPIES ARE UNCONTROLLED

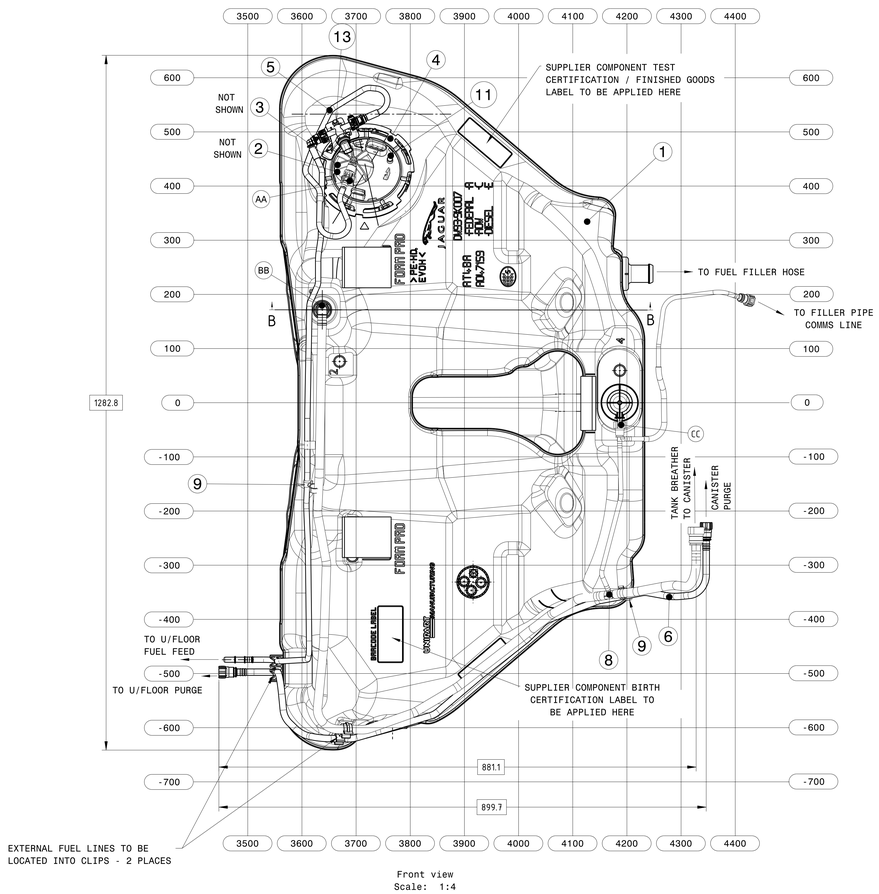


Front view
Scale: 1:4

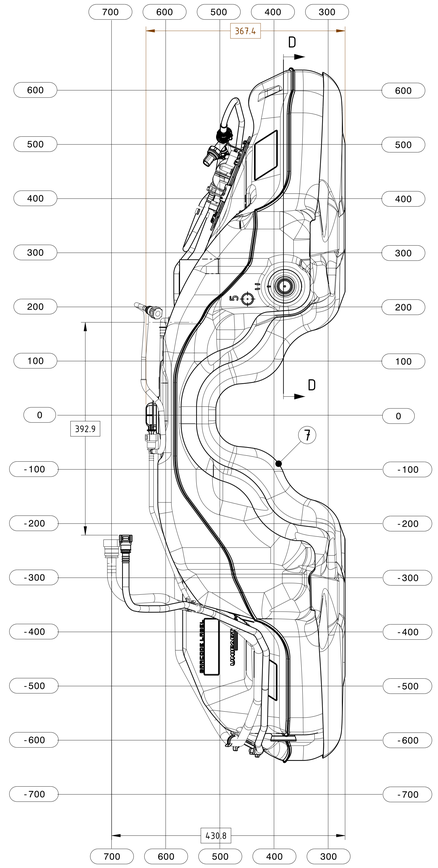


| | ITEM | PART NUMBER | DESCRIPTION | QUANTITY |
|---|---|---|---|---|
| B1 | 1 | DW93-9002-AB | TNK ASY FUL | 1 |
| B2 | 2 | DX23-9H307-AB | SDR & PMP ASY-FU/TNK | 1 |
| | 3 | 6H52-9276-AA | GSKT-FU/TNK SDR | 1 |
| C1 | 4 | CPLA-9C385-AA | RG-FU/PMP RET LK | 1 |
| | 5 | DW93-9324-AB | TUB ASY-FU/TNK TO FUL TUB FEED INC SENSOR | 1 |
| | 6 | AW93-9A186-AC | PIP-FU/TNK VEN RR LH | 1 |
| | 7 | AW93-9A032-AC | SHLD FU/TNK HT | 1 |
| | 8 | AW93-9C047-AC | TUB ASY - FU/VPR CONTR VLV BREATHER | 1 |
| C2 | 9 | W9395305 | CLIP ASSY | 2 |
| B3 | 10 | DW93-9275-AB | SDR & OLET TUB ASY FU/TNK | 1 |
| | 11 | DX23-9A309-AA | FLNG FU/TNK SDR & OLET TUB MTG | 1 |
| C3 | | | | |
| C4 | 13 | W500002-S | SC M05x0.80x12.0 HEX FLNG HD | 1 |
| | 14 | | DUST CAP (ICV) | 1 |
| | 15 | | DUST CAP (FEED LINE) | 1 |

| DIMENSION | | TOLERANCE |
|---|---|---|
| OVER | UPTO | +/- |
| 0 | 127 | 2 |
| 127.1 | 254 | 3 |
| 254.1 | 508 | 4 |
| 508.1 | OVER | 5 |

TANK EXTERNAL CONNECTIONS TO BE MADE AT TANK SUPPLIER

| ITEM | CONNECTION DESCRIPTION |
|---|---|
| * AA | TNK ASY - FUL/TNK TO FUL TUB FEED INC SENSOR TO FLNG FU/TNK |
| * BB | TUB ASY - FU/VPR CONTR VLV BREATHER TO CONN FU/VPR TUB MLE |
| * CC | TUB ASY - FU/TNK CONTR VLV BREATHER TO FLT FUL DRN TNK ROV |

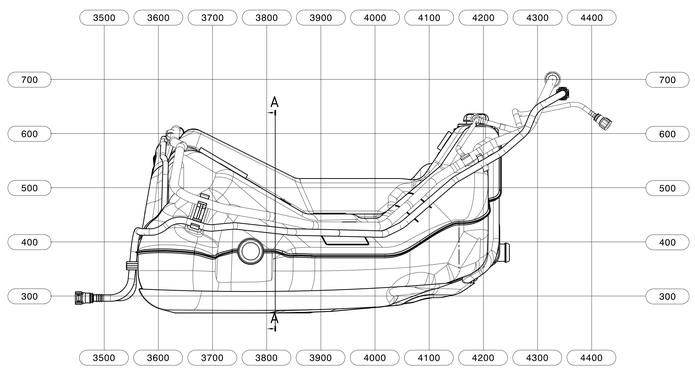

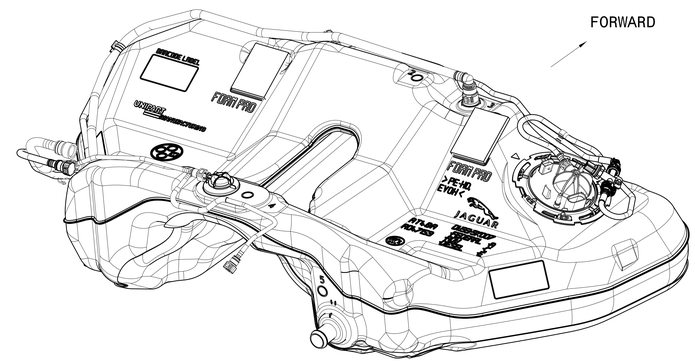


NOTE - PIPES SHOWN IN VEHICLE FITTED POSITION.
BREATHER, PURGE LINE & COMMS TUBE TO
BE STOWED & TAPED TO TANK PRIOR TO
DELIVERY.

FEDERAL FUEL TANK TOP LEVEL ASSY - 13MY

| DRAWING | REV | SHT |
|---|---|---|
| DW93-9K007-AC | 3 | 2 OF 3 |

CAD FILE DW93-9K007-A-DWG-01

JAGUAR CARS LIMITED LAND ROVER

PRINTED COPIES ARE UNCONTROLLED

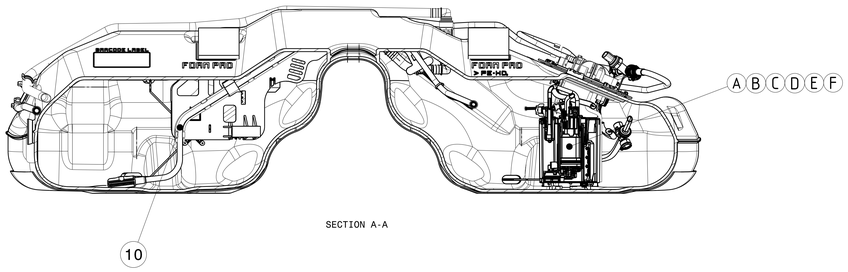


SECTION A-A

WHEN FITTED ENSURE SDR & OLET TUB ASY FU/TNK (ITEM 10) HAS PASSED AND IS HELD BY RETENTION LATCH FEATURE ON INTERNAL BRACKET

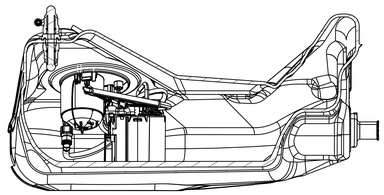

Section view B-B
Scale: 1:4

TANK INTERNAL CONNECTIONS

| | ITEM No | CONNECTION DESCRIPTION |
|---|---|---|
| * | A | SDR & PMP ASY PETROL TO BAYONET (FDM TO BAYONET) |
| * | B | SDR & OLET TUB ASY FU/TNK TO SDR & PMP ASY FU/TNK (SUCKING JET TO FDM) |
| ▽ | C | ELECTRICAL FLYLEAD TO FDM (PASSIVE MAPPS) |
| * | D | SDR & PMP ASY FEED TO FLNG FU/TNK SDR & OLET TUB MTG (FEED TO FLANGE) |
| * | E | PMP ASY ELECTRICAL CONNECTOR TO FLNG FU/TNK SDR & OLET TUB MTG (PMP ELECTRICAL CONNECTOR TO FLANGE) |
| * | F | SDR ASSY ELECTRICAL CONNECTOR TO FLANGE |

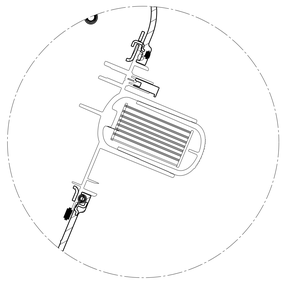

SECTION E-E
SCALE: 1:2

SECTION THROUGH FLANGE, TANK, SEAL, ENCAPSULATED RING AND LOCKING RING.

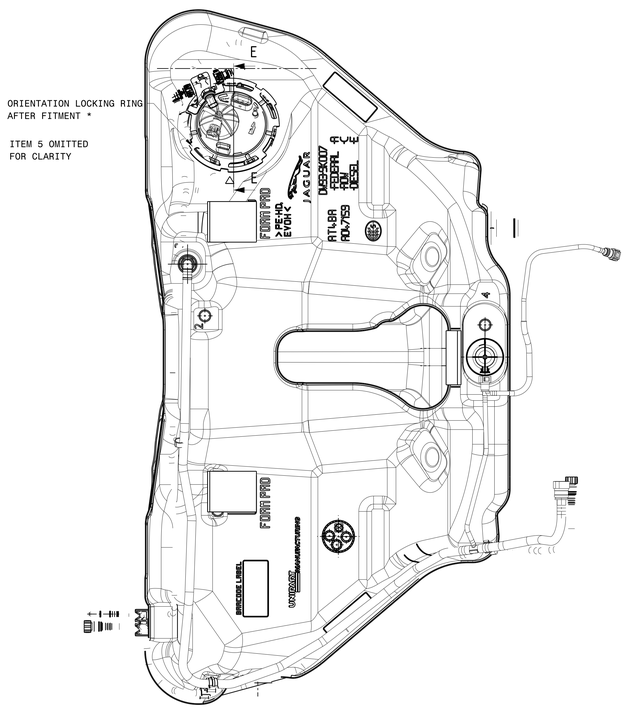


ORIENTATION LOCKING RING AFTER FITMENT *

ITEM 5 OMITTED FOR CLARITY

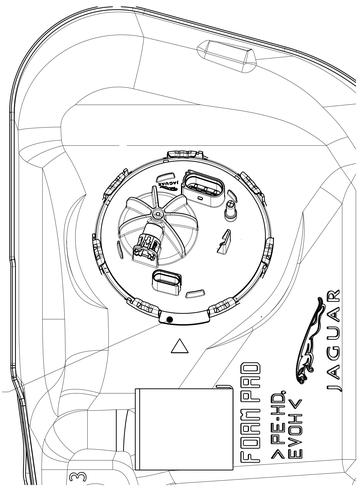


* FLANGE TAB TO BE LOCATED IN THIS ORIENTATION

ITEMS 4 & 5 ARE OMITTED FOR CLARITY

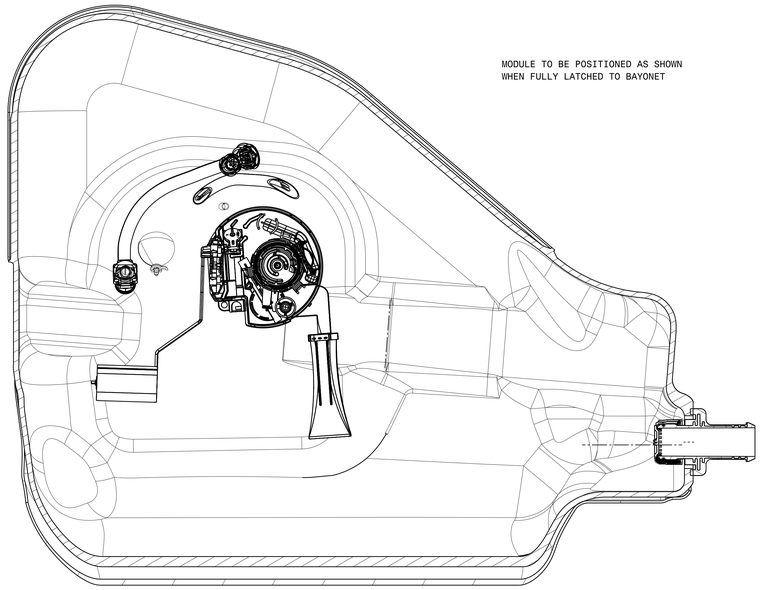

MODULE TO BE POSITIONED AS SHOWN WHEN FULLY LATCHED TO BAYONET

SECTION D-D
SCALE 1:2

FEDERAL FUEL TANK TOP LEVEL ASSY - 13MY

| | | | |
|---|---|---|---|
| DRAWING | DW93-9K007-AC | REV 3 | SHT 3 OF 3 |
| CAD FILE DW93-9K007-A-DWG-01 | JAGUAR CARS LIMITED / LAND ROVER | | |

PRINTED COPIES ARE UNCONTROLLED

NOTES:
* REFER TO SUPPLEMENT K DOCUMENT AND CRT

THIS ASSEMBLY MUST COMPLY WITH THE REQUIREMENTS OF ENGINEERING SPECIFICATION ES 3U5A-9002-BB, EXCEPT FOR THE SECTION 3.6 CONTAMINATION WHERE NOTE BELOW APPLIES.

THIS ASSY MUST COMPLY WITH THE REQUIREMENTS OF ENGINEERING SPECIFICATION FTDVPX250.10

LOCKING RING TO MEET THE REQUIREMENTS OF SAE J2587.

COMPONENT TO BE MARKED IN LINE WITH JLR ENGINEERING CAD & DRAFTING STANDARD E-3. COMPONENT TO COMPLY WITH THE IDENTIFICATION OF JLR ENGINEERING CAD & DRAFTING STANDARD E-4 FOR POLYMERIC MATERIALS.

GROSS CAPACITY - 79.55 LITRES
EMPTY TO DESIGN CUT OFF - 71.1 LITRES
USABLE CAPACITY - 69.5 LITRES
WEIGHT OF FUEL TANK ASSEMBLY - 12.550Kg ± 0.5Kg

TOTAL INTERNAL DEBRIS MUST NOT EXCEED 4.0mg WHEN TESTED TO LRLTM 30.IC101 OR SIMILAR APPROVED METHOD.
THE MAXIMUM PERMISSIBLE PARTICLE SIZE MUST NOT EXCEED 400 microns/0.6mg WHEN MEASURED IN ACCORDANCE WITH LRLTM 30.DD.103.

* FOR CURRENT RELEASE STATUS SEE WERS ENGINEERING NOTICE.

THIS ASSEMBLY IS TO CONFORM TO THE GPDS REQUIREMENTS OF THE RELEVANT JAGUAR LAND ROVER SPECIFICATIONS CONTAINED IN THE DESIGN VERIFICATION PLAN LATEST ISSUE.

AS SUPPLIER TO JAGUAR LAND ROVER COMPONENT MUST BE FREE INTERNALLY FROM THE FOLLOWING:-
- ALL MANUFACTURING AND PROCESS TEST FLUIDS.
- ALL IN PROCESS PRESSURE TEST FLUIDS.
- ALL MANUFACTURING DEBRIS, SWARF OR WELD SPATTER.
-WATER, DIRT OR DUST INGRESS.

FULL TRACEABILITY TO BE INDELIBLY MARKED / LABELLED ON THIS ASSEMBLY WITH REGARD TO YEAR, MONTH, DAY, TIME, ASSEMBLY LINE TEST DATA AND CRITICAL SECOND TIER SUPPLIER COMPONENTS ie FUEL DELIVERY MODULE AND SENDER(S).

THIS ASSEMBLY IS TO MEET THE LEGISLATIVE REQUIREMENTS OF ECE34, ECE34 ANNEX 5 AND EEC DIRECTIVE 70/221, CHINA FUEL TANKS.

▽ 100% LEAK TEST: PRESSURE DIFFERENTIAL TEST USING 100% HELIUM. LEAK RATE TO BE LESS THAN 1.4 x $10^{-5}$ l/s AT 140 mbar DIFFERENTIAL PRESSURE. AFTER LEAK TESTING NO PART TO BE REMOVED OR CHANGED WITHOUT RETESTING.

▽ 100% FUEL PUMP MODULE AND SENDER UNIT AND TANK VALVE FUNCTIONALITY TESTS TO BE CARRIED OUT IN LINE WITH PROCESS CONTROL DOCUMENTS AGREED WITH JAGUAR/LANDROVER PRODUCT ENGINEERING AND STA DEPARTMENTS.

▽ PUMP START TEST - MEDIUM AIR, VOLTAGE 6+/-0.1V.
MEASURING TIME 1<t<5 SECS.
CURRENT <4A. MAX 2 TESTS.

▽ ACTIVE SENDER UNIT ROLL OVER TEST TO CONFORM -
SENDER FLOAT POSITION EMPTY RESISTANCE VALUE WITHIN TOLERANCE 51.2±1
SENDER FLOAT POSITION FULL RESISTANCE VALUE WITHIN TOLERANCE 992±10.5
SENDER FLOAT BACK TO EMPTY RESISTANCE VALVE WITHIN TOLERANCE 51.2±1

▽ PASSIVE SENDER UNIT ROLL OVER TEST TO CONFORM -
SENDER FLOAT POSITION EMPTY RESISTANCE VALUE WITHIN TOLERANCE: 51.2±1Ω
SENDER FLOAT POSITION FULL RESISTANCE VALUE WITHIN TOLERANCE: 445±25Ω
SENDER FLOAT POSITION BACK TO EMPTY RESISTANCE VALUE WITHIN TOLERANCE: 51.2±1Ω

FOR ELECTRICAL CONNECTOR PIN OUT INFORMATION REFER TO DRAWING DX23-9A309-A* LATEST ISSUE.

FUEL TANK GASKET TO BE CLEAN AND FREE FROM ANY SURFACE IMPERFECTION THAT MAY BE DETRIMENTAL TO ITS SEALING INTEGRITY.

REFER TO FUEL TANK ASSY STOWAGE POSITION DOCUMENT FOR DELIVERED CONDITION TO CASTLE BROMWICH ASSY PLANT.

FEDERAL FUEL TANK TOP LEVEL ASSEMBLY - 13MY

▽ 100% TANK VENT SYSTEM - VACUUM TEST
ROLL TANK OVER 180° FROM NORMAL VEHICLE FITTED POSITION. APPLY A VACUUM OF AT LEAST - 150mb. APPLY THE VACUUM AT THE BREATHER STUB CONNECTION. EVACUATION TIME 5 SECS MINIMUM. STABILISATION TIME 10 SECS MINIMUM. LEAK CHECK FOR 20 SECS MINIMUM. LEAK RATE TO BE <50ccm. RELEASE VACUUM, ROLL BACK TO NORMAL VEHICLE FITTED POSITION.

ALL INTERNAL & EXTERNAL CONNECTIONS TO BE 100% VERIFIED.

▽ TORQUE FIGURES TO BE 100% MONITORED AND RECORDED ON AN AUDIT SYSTEM - ITEM 4 TIGHTEN CAM LOCK TO CLOSURE STOP. TORQUE TO ACHIEVE THIS 250Nm ±20Nm ANGULAR ROTATION START AND FINISH TO BE MONITORED DURING ASSEMBLY. ANGULAR ROTATION 17.3°.

ALL FUEL LINES AND TANK OPENINGS AS DESIGNATED TO BE CAPPED DURING ASSEMBLY, TRANSPORT AND STORAGE. CAP(S) MUST PROTECT ANY SEALING SURFACE AND MUST REMAIN EFFECTIVE FOR PROLONGED STORAGE. CAP(S) MUST EASILY BE REMOVED WITHOUT THE USE OF TOOLS. IT MUST NOT BE POSSIBLE TO FIT ASSEMBLY TO MATING COMPONENTS WITH CAP(S) STILL IN PLACE.

NO LUBRICANT TO BE USED DURING THE MANUFACTURE OF PARTS OR ASSEMBLY OF PARTS UNLESS AUTHORISED BY JLR MATERIALS AND FUEL SYSTEM ENGINEERING DEPARTMENTS.

* COMPONENT TO BE STOWED, PALLETISED, TRANSPORTED AND STORED SUCH THAT NO DISTORTION OF FORM, INTERNAL OR EXTERNAL DAMAGE OR DIRT INGRESS CAN OCCUR TO THE ASSEMBLY.

ASSEMBLY TO BE FREE FROM FLASH, BURRS, SHARP EDGES AND ANY OTHER IMPERFECTIONS THAT MAY CAUSE INJURY DURING HANDLING OR THAT WOULD BE DETRIMENTAL TO ITS ASSEMBLY OR PERFORMANCE.

CHANGES AFFECTING DESIGN, COMPOSITION OR PROCESSING TO THE ASSEMBLY OR SUB COMPONENTS PREVIOUSLY APPROVED FOR PRODUCTION REQUIRE PRIOR APPROVAL FROM JLR PRODUCT ENGINEERING. REFER TO QS9000.

ENGINEERING APPROVAL OF A MINIMUM OF SIX SAMPLES FROM EACH SUPPLIER IS REQUIRED PRIOR TO FIRST SHIPMENT OF PARTS FOR INITIAL RELEASE AND FOR SUBSEQUENT CHANGE REQUESTS.

UNLESS OTHERWISE SPECIFIED ALL LINES AND SURFACES, SAME SIDE OF MATERIAL AS DATUM.

ALL SEALING SURFACES TO BE CLEAN AND FREE FROM ANY SURFACE IMPERFECTIONS (INCLUDING) HOLES, SPOTS, DENTS, FLASH AND OFFSET MOULDING LINES.

AFTER ASSEMBLY ALL HOSES, PIPES TO BE FREE FROM KINKS.

DO NOT USE HOSES / PIPES ATTACHED TO THIS ASSEMBLY TO REMOVE FROM STILLAGE OR CARRY COMPONENT.

ALL PROTECTIVE CAPS TO BE REMOVED, AND LINES AND ELECTRICAL CONNECTOR TO BE UNSTOWED PRIOR TO ASSEMBLY OF COMPONENT TO VEHICLE.

TEST CERTIFICATION LABEL / FINISHED GOODS LABEL -
- DATE OF FINAL ASSEMBLY
- TIME OF FINAL ASSEMBLY
- SEQUENTIAL ID NUMBER. (WHICH CORRELATES AGAINST CAQ DATA)
- PRODUCT DESCRIPTION & VARIENT INFORMATION
- PART NUMBER

IT IS THE RESPONSIBILITY OF THE COMPONENT / ASSEMBLY MANUFACTURER TO ENSURE THAT THE COMPONENT / ASSEMBLY MEETS THE REQUIREMENTS OF THE CHINESE PARTS MARKING - CCC

IT IS ALSO THE RESPONSIBILITY OF THE COMPONENT / ASSEMBLY MANUFACTURER TO ENSURE THAT COPIES OF APPROVAL CERTIFICATES FOR BOTH THE ASSEMBLY PLANT AND THE COMPONENT / ASSEMBLY MUST BE FORWARDED TO THE RELEVANT JLR REPRESENTATIVE UPON ISSUE FROM THE CHINESE AUTHORITIES

SERVICE NOTE:
IF ITEM 8 FLNG FU/TNK SDR & OLET TUB MTNG (FLANGE) IS REMOVED OR DISTURBED IN SERVICE A NEW GSKT FU/TNK SDR ITEM 3 MUST BE USED. REFER TO SHEET 3 FOR CORRECT ORIENTATION REPLACEMENT OF ITEM 4
RG - FU/TNK.

▽ CONTROL ITEM - THE ▽ ALSO IDENTIFIES CRITICAL CHARACTERISTICS DESIGNATED BY THE CROSS FUNCTIONAL TEAMS DEVELOPING THE PRODUCT. THESE AND ADDITIONAL CRITICAL CHARACTERISTICS IDENTIFIED BY PROCESS REVIEWS MUST APPEAR ON THE CONTROL PLANS ACCORDING TO QS-9000. THESE CONTROL PLANS REQUIRE PRODUCT ENGINEERING APPROVAL.

| LTRS | REVISIONS | | |
|---|---|---|---|
| ORIGINATOR | CHECKER | ENGR APP | MATL APP |
| RELEASE OF DX23-9K007-AA<br>UEP2 E 50024858 000 120214 | | | |
| PMORGA65 | AWHITEMA | GVOICE | MATSENG |
| RELEASE OF DX23-9K007-AB<br>B1. ITEM 1 WAS DX23-9002-AA<br>B2. ITEM 2 WAS DX23-9H307-AA<br>B3. ITEM 5 WAS DX23-14407-AA<br>UEP2 E 50036082 000 120530 | | | |
| HHERUR | PVOKES | GVOICE | MATSENG |
| RELEASE OF DX23-9K007-AC<br>C1. ITEM 6 WAS DX23-9327-AA<br>UEP2 E 50044698 000 120224 | | | |
| PMANNER2 | AMOSS21 | GVOICE | MATSENG |
| RELEASE OF DX23-9K007-AD<br>B1. ITEM 1 WAS DX23-9002-AB<br>UEP2 E 50063288 000 130618 | | | |
| SSAHOO2 | AMOSS21 | GVOICE | MATSENG |

| | | | |
|---|---|---|---|
| REFERENCE | DS-X250-100100-C810-36 | | |
| PART MUST COMPLY WITH RESTRICTED SUBSTANCE MANAGEMENT STANDARD STJLR.99.9999 TO SAFEGUARD HEALTH, SAFETY AND THE ENVIRONMENT | | | |
| DRAFTED IN ACCORDANCE WITH JAGUAR LAND ROVER PLM STANDARDS CURRENT AT INITIAL RELEASE | | 3RD ANGLE PROJ DIMENSIONS ARE IN MILLIMETRES | |
| CAD TYPE CATIA5 | CAD LOC. TCe | CAD FILE DX23-9K007-A-DWG-01 | REV ;6 | DTMC IS MASTER |
| DESIGN PMORGA65 | DETAIL PMORGA65 | DRAWING DX23-9K007-AD | SHT 1 OF 3 |
| CHECKED AWHITEMA | SAFETY N/A | TITLE TNK & SDR ASY FUL | RH/LH SHOWN |
| SCALE 1:1 | DATE 120214 | | SIZE A1 |

JAGUAR LAND ROVER LIMITED

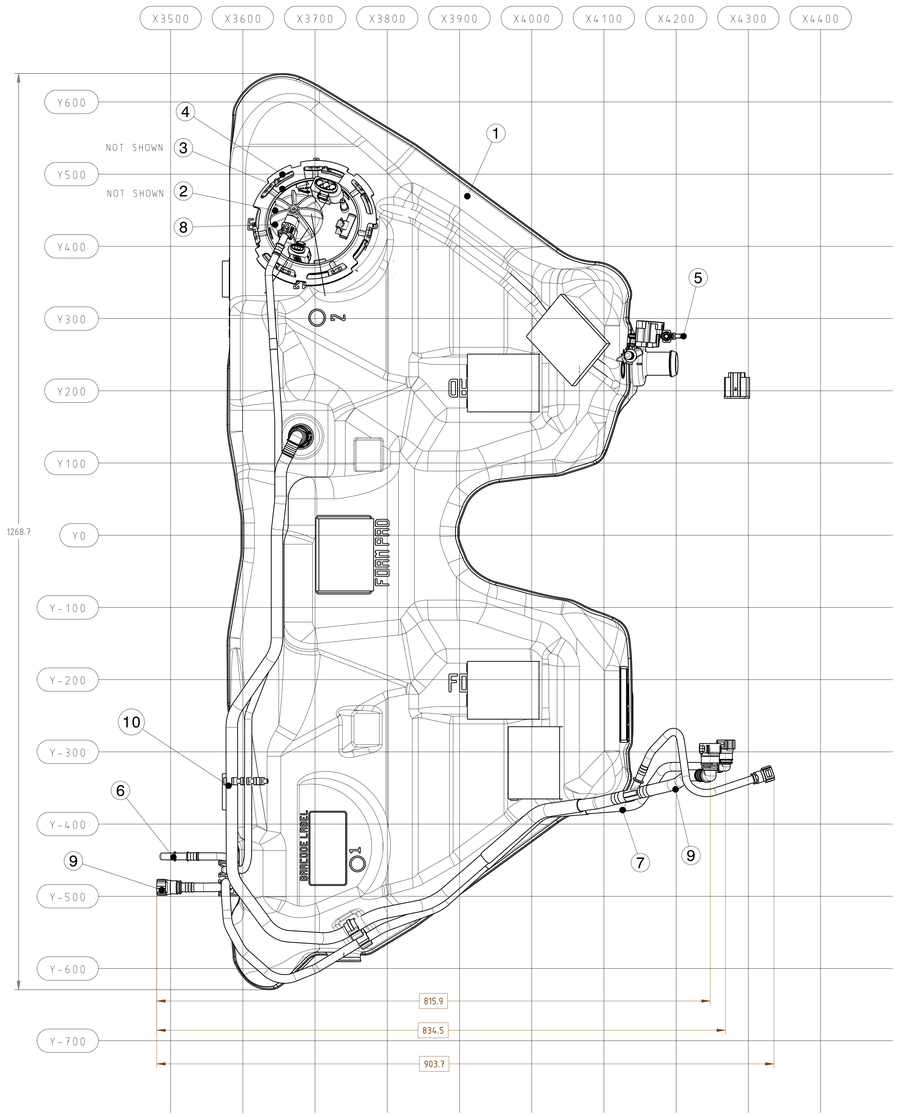


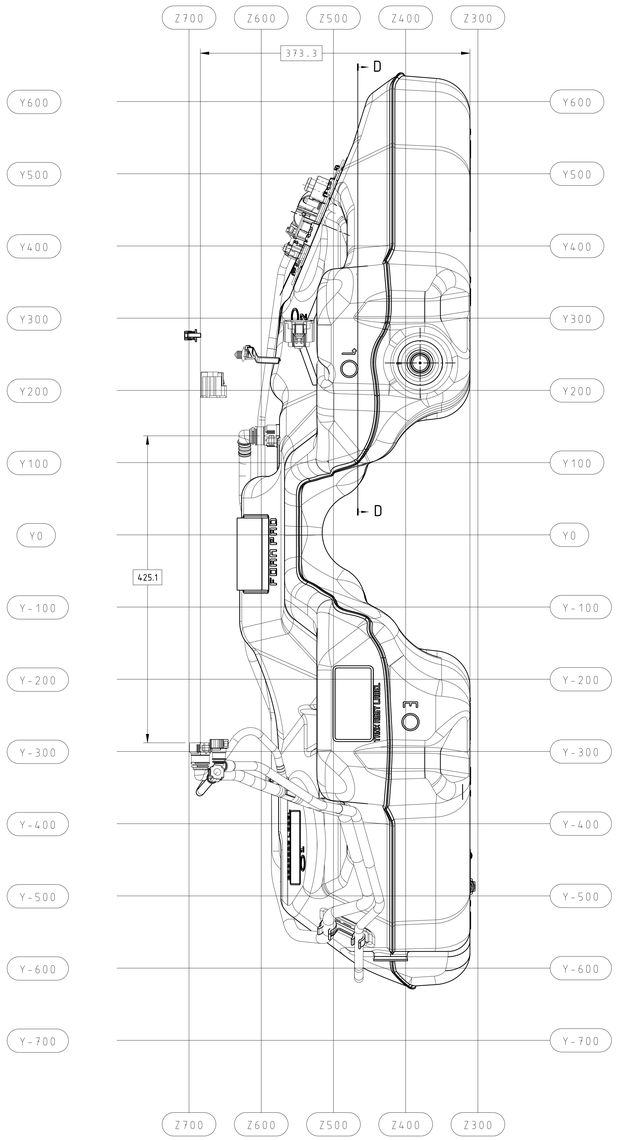


| | ITEM | PART NUMBER | DESCRIPTION | QTY |
|---|---|---|---|---|
| B1 | 1 | DX23-9002-AC | TNK ASY FUL | 1 |
| B2 | 2 | DX23-9H307-AB | SDR & PMP ASY-FU/TNK | 1 |
| | 3 | 6H52-9276-AA | GSKT-FU/TNK SDR | 1 |
| | 4 | 9X23-9C385-AA | RG-FU/PMP RET LK | 1 |
| B3 | 5 | DX23-14407-AB | HARNESS (PETROL) | 1 |
| C1 | 6 | DX23-9327-AB | HOS ASY FUL TUB RR | 1 |
| | 7 | 9X23-9A186-AB | PIP-FU/TNK VEN RR LH | 1 |
| | 8 | DX23-9A309-AA | FLNG FU/TNK SDR & OLET TUB MTNG | 1 |
| | 9 | 9X23-9C047-AC | TUB ASY FU/VPR CONTR VLV | 1 |
| | 10 | CX23-9S305-AA | CLP-FU/VPR TUB | 1 |

| DIMENSION | | TOLERANCE |
|---|---|---|
| OVER | UPTO | +/- |
| 0 | 127 | 2 |
| 127.1 | 254 | 3 |
| 254.1 | 508 | 4 |
| 508.1 | OVER | 5 |

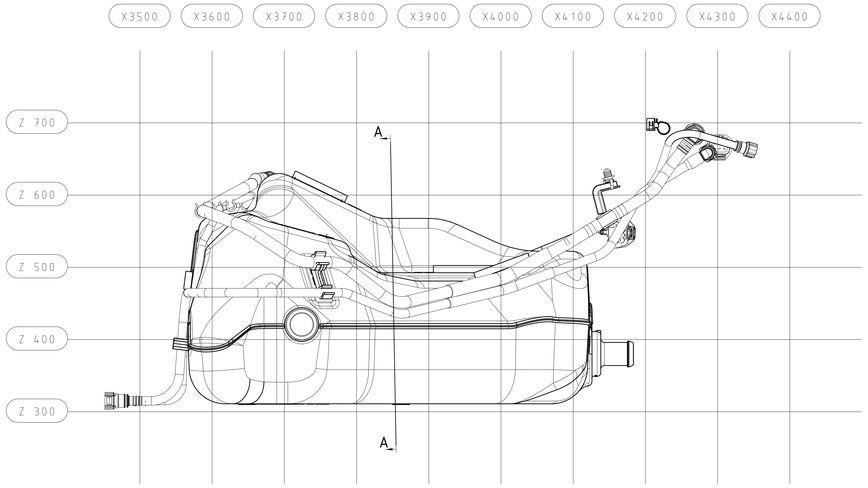


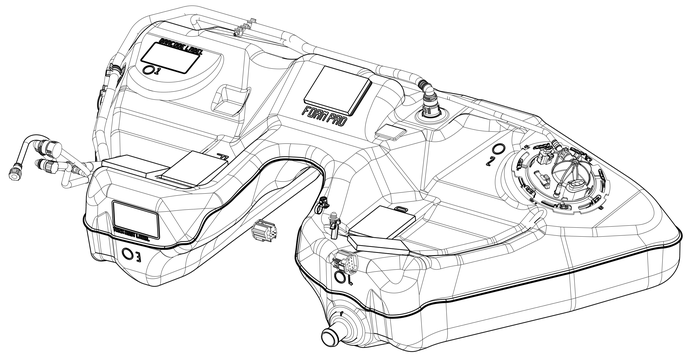

ISOMETRIC VIEW
SCALE : 1:4

FEDERAL FUEL TANK TOP LEVEL ASSY - 13MY

| | | | |
|---|---|---|---|
| DRAWING | DX23-9K007-AD | REV :6 | SHT 2 OF 3 |
| CAD FILE DX23-9K007-A-DWG-01 | JAGUAR LAND ROVER LIMITED | | |

PRINTED COPIES ARE UNCONTROLLED

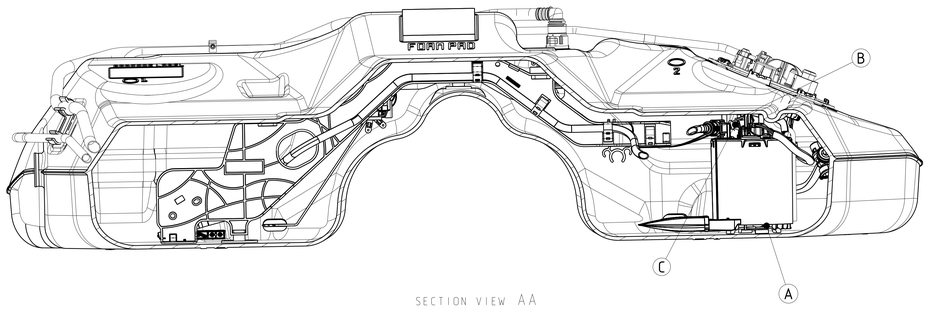


SECTION VIEW AA
SCALE: 1:3

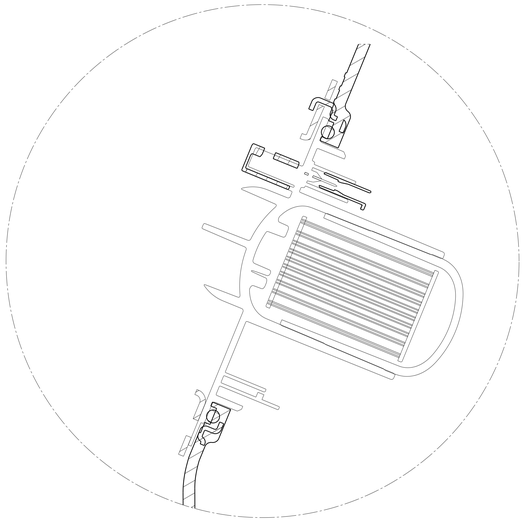

SECTION CUT EE
SCALE: 1:1

SECTION THROUGH FLANGE, TANK, SEAL, ENCAPSULATED RING AND LOCKING RING.

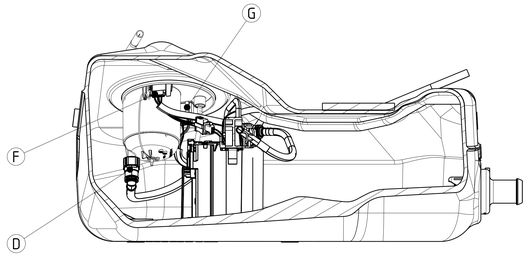


SECTION VIEW BB
SCALE: 1:3

LOCKING RING ROTATION FROM START TO LATCHED POSITION 17°30' +15'/-0'

ORIENTAION LOCKING RING AFTER FITMENT

PIPES AND HARNESS OMITTED FOR CLARITY

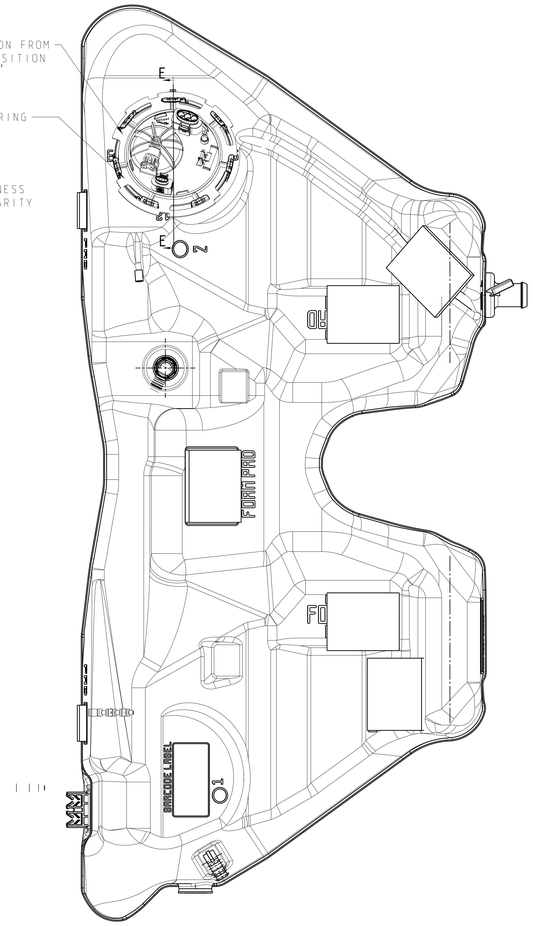


FRONT VIEW
SCALE: 1:3

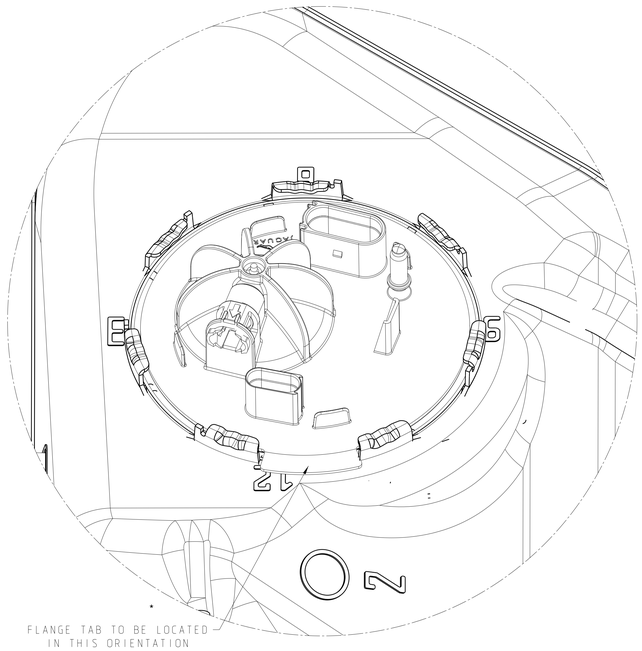

FLANGE TAB TO BE LOCATED IN THIS ORIENTATION

DETAIL C
SCALE: 1:1

PIPES, HARNESS AND LOCKING RING OMITTED FOR CLARITY

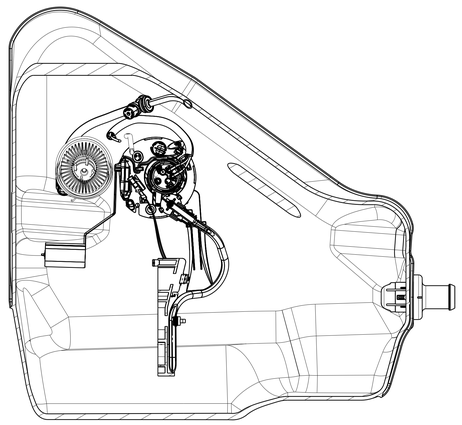

SECTION VIEW DD
SCALE: 1:3

MODULE TO BE POSITIONED AS SHOWN WHEN FULLY LATCHED TO BAYONET

## TANK INTERNAL CONNECTIONS

| | ITEM No | CONNECTION DESCRIPTION |
|---|---|---|
| • | A | SDR & PMP ASY PETROL TO BAYONET |
| • | B | VPR & BRKT ASY-FUL VENTURI TO SDR & PMP ASY |
| • | C | SDR & PMP ASY ELECTRICAL CONNECTOR TO VPR & BRKT ASY-FUL ELECTICAL CONNECTOR |
| ▽ | D | SDR & PMP FEED LINE CONNECTION TO FLNG FU/TNK SDR & OLET TUB MTNG |
| • | E | |
| • | F | SDR & PMP ASY EARTH ELECTRICAL CONNECTOR TO SDR & PMP ASY FLANGE |
| • | G | SDR & PMP ASY ELECTRICAL CONNECTOR TO SDR & PMP ASY FLANGE |

FEDERAL FUEL TANK TOP LEVEL ASSY - 13MY

| DRAWING | DX23-9K007-AD | REV :6 | SHT 3 OF 3 |
|---|---|---|---|
| CAD FILE DX23-9K007-A-DWG-01 | JAGUAR LAND ROVER LIMITED | | |

PRINTED COPIES ARE UNCONTROLLED

NOTES:

ITEMS MARKED WITH * REFER TO X152 SC-CC AGREEMENT SHEET

▽ THIS ASSEMBLY MUST COMPLY WITH ENGINEERING SPECIFICATION ES 7U5A-9K007-AA, EXCEPT FOR THE SECTION 3.6 CONTAMINATION WHERE NOTE BELOW APPLIES.

* TOTAL INTERNAL DEBRIS MUST NOT EXCEED 4.0mg WHEN TESTED TO LRLTM 30.IC101 OR SIMILAR APPROVED METHOD.
THE MAXIMUM PERMISSIBLE PARTICLE SIZE MUST NOT EXCEED 400 microns/0.6mg WHEN MEASURED IN ACCORDANCE WITH LRLTM 30.DD.103.

LOCKING RING TO MEET THE REQUIREMENTS OF SAE J2587.

COMPONENT TO COMPLY WITH JAGUAR LANDROVER ENGINEERING CAD & DRAFTING STANDARD PLMJLR.00.0028. (CODING & BRANDING)
COMPONENT TO COMPLY WITH JAGUAR LANDROVER ENGINEERING CAD & DRAFTING STANDARD PLM.00.0029. (IDENTIFICATION OF POLYMERIC MATERIALS)

GROSS INTERNAL CAPACITY - 87.2 LITRES

LIQUID CAPACITY (ACCORDING TO FU-1047) -72.0 LITRES

USABLE CAPACITY (ACCORDING TO FU-1049)- 70.0 LITRES

WEIGHT OF FUEL TANK ASSEMBLY - XX.Xkg ± 0.5kg TBC

FOR CURRENT RELEASE STATUS SEE WERS ENGINEERING NOTICE.

AS SUPPLIED TO JAGUAR LAND ROVER COMPONENT MUST BE FREE INTERNALLY FROM THE FOLLOWING:-
- ALL MANUFACTURING AND PROCESS TEST FLUIDS.
- ALL IN PROCESS PRESSURE TEST FLUIDS.
- ALL MANUFACTURING DEBRIS.
-WATER, DIRT OR DUST INGRESS.

FULL TRACEABILITY TO BE INDELIBLY MARKED / LABELLED ON THIS ASSEMBLY WITH REGARD TO YEAR, MONTH, DAY, TIME, ASSEMBLY LINE TEST DATA AND CRITICAL SECOND TIER SUPPLIER COMPONENTS ie FUEL DELIVERY MODULE AND SENDER(S), EXTERNAL FUEL LINE ASSEMBLIES.

BIRTH CERTIFICATE LABLE -
DATE OF CARCASS BLOW MOULD
TIME OF CARCASS BLOW MOULD
SEQUENTIAL CARCASS I.D. NUMBER
PRODUCT GENERIC IDENTIFICATION

▽ 100% LEAK TEST ACCORDING TO ESYU5A-9000-AC: PRESSURE DIFFERENTIAL TEST USING 100% HELIUM. LEAK RATE TO BE LESS THAN 1.4 x 10-5 mbar 1/s AT 70mb DIFFERENTIAL PRESSURE AFTER LEAK TESTING NO PART TO BE REMOVED OR CHANGED WITHOUT RETESTING.

▽ 100% FUEL PUMP MODULE AND SENDER UNIT AND TANK VALVE FUNCTIONALITY TESTS TO BE CARRIED OUT IN LINE WITH PROCESS CONTROL DOCUMENTS AGREED WITH JAGUAR/LANDROVER PRODUCT DEVELOPMENT AND STA DEPARTMENTS.

▽ PUMP START TEST - MEDIUM AIR, VOLTAGE 6+/-0.1V.
MEASURING TIME 1<t<5 SECS.
CURRENT <4A. MAX 2 TESTS.

▽ SENDER UNIT(S) ROLL OVER TEST TO CONFORM -
SENDER FLOAT POSITION EMPTY RESISTANCE VALUE : 992±10.5 Ω
SENDER FLOAT POSITION FULL RESISTANCE VALUE : 51.2±1 Ω
SENDER FLOAT POSITION BACK TO EMPTY RESISTANCE VALUE : 992±10.5 Ω

FOR ELECTRICAL CONNECTOR PIN OUT INFORMATION REFER TO DRAWING CPLA-9A309-AA

FUEL TANK GASKET TO BE CLEAN AND FREE FROM ANY SURFACE IMPERFECTION THAT MAY BE DETRIMENTAL TO ITS SEALING INTEGRITY.

▽ INTERNAL BREATHER LINE CONNECTION TO FLANGE IS TO BE VERIFIED BY 100% PUSH OFF TEST.

▽ 100% TANK VENT SYSTEM - VACUUM TEST
(APPLY THE VACUUM AT THE BREATHER STUB CONNECTION)
ROLL TANK OVER 180° FROM NORMAL VEHICLE FITTED POSITION.
APPLY A VACUUM OF AT LEAST - 150mb.
EVACUATION TIME 5 SECS MINIMUM.
STABILISATION TIME 10 SECS MINIMUM.
LEAK CHECK FOR 20 SECS MINIMUM.
LEAK RATE TO BE <50ccm.
RELEASE VACUUM, ROLL BACK TO NORMAL VEHICLE FITTED POSITION.
ENSURE VALVE HAS RE-OPENED.

ALL INTERNAL & EXTERNAL CONNECTIONS TO BE 100% VERIFIED.

▽ TORQUE FIGURES TO BE 100% MONITORED AND RECORDED ON AN AUDIT SYSTEM - ITEM 4 TIGHTEN CAM LOCK TO CLOSURE STOP. TORQUE TO ACHIEVE THIS 250Nm ±20Nm ANGULAR ROTATION START AND FINISH TO BE MONITORED DURING ASSEMBLY. ANGULAR ROTATION 17.3°.

TORQUE FIGURE FOR ITEM 8 - 7Nm ±1Nm
TORQUE FIGURE FOR ITEM 12 - 7Nm ±1Nm
TORQUE FIGURE FOR ITEM 16 - 7Nm ±1Nm

ALL FUEL LINES AND TANK OPENINGS AS DESIGNATED TO BE CAPPED DURING ASSEMBLY, TRANSPORT AND STORAGE. CAP(S) MUST PROTECT ANY SEALING SURFACE AND MUST REMAIN EFFECTIVE FOR PROLONGED STORAGE. CAP(S) MUST EASILY BE REMOVED WITHOUT THE USE OF TOOLS. IT MUST NOT BE POSSIBLE TO FIT ASSEMBLY TO MATING COMPONENTS WITH CAP(S) STILL IN PLACE.

DUST CAPS TO BE PRESENT ON FUEL FEED LINE

* NO LUBRICANT TO BE USED DURING THE MANUFACTURE OF PARTS OR ASSEMBLY OF PARTS UNLESS AUTHORISED BY JLR MATERIALS AND FUEL SYSTEM ENGINEERING DEPARTMENTS.

COMPONENT TO BE STOWED, PALLETISED, TRANSPORTED AND STORED SUCH THAT NO DISTORTION OF FORM, INTERNAL OR EXTERNAL DAMAGE OR DIRT INGRESS CAN OCCUR TO THE ASSEMBLY.

ASSEMBLY TO BE FREE FROM FLASH, BURRS, SHARP EDGES AND ANY OTHER IMPERFECTIONS THAT MAY CAUSE INJURY DURING HANDLING OR THAT WOULD BE DETRIMENTAL TO ITS ASSEMBLY OR PERFORMANCE.

CHANGES AFFECTING DESIGN, COMPOSITION OR PROCESSING TO THE ASSEMBLY OR SUB COMPONENTS PREVIOUSLY APPROVED FOR PRODUCTION REQUIRE PRIOR APPROVAL FROM JLR PRODUCT ENGINEERING. REFER TO QS9000.

UNLESS OTHERWISE SPECIFIED ALL LINES AND SURFACES, SAME SIDE OF MATERIAL AS DATUM.

ALL SEALING SURFACES TO BE CLEAN AND FREE FROM ANY SURFACE IMPERFECTIONS (INCLUDING) HOLES, SPOTS, DENTS, FLASH AND OFFSET MOULDING LINES.

AFTER ASSEMBLY ALL HOSES, PIPES TO BE FREE FROM KINKS.

ALL PROTECTIVE CAPS TO BE REMOVED, AND LINES TO BE UNSTOWED PRIOR TO ASSEMBLY OF COMPONENT TO VEHICLE.

TEST CERTIFICATION LABEL / FINISHED GOODS LABEL -
- DATE OF FINAL ASSEMBLY
- TIME OF FINAL ASSEMBLY
- SEQUENTIAL ID NUMBER. (WHICH CORRELATES WITH CAQ DATA)
- PRODUCT DESCRIPTION & VARIANT INFORMATION
- PART NUMBER

THIS ASSEMBLY IS TO MEET THE LEGISLTIVE REQUIREMENTS OF EC34 EC35 ANNEX 5 AND EEC DIRECTIVE 70/221

IT IS THE RESPONSIBILITY OF THE COMPONENT/ASSEMBLY MANUFACTURER TO ENSURE THAT THE COMPONENT/ASSEMBLY MEETS THE REQUIREMENTS OF CHINESE PARTS MARKING CCC.

IT IS ALSO THE RESPONSIBILITY OF THE COMPONENT/ASSEMBLY MANUFACTURER TO ENSURE THAT COPIES OF THE APPROVAL CERTIFICATES FOR THE ASSEMBLY PLANT AND COMPONENT/ASSEMBLY ARE FORWARDED TO THE RELEVANT JAGUAR LANDROVER REPRESENTATIVE UPON ISSUE FROM THE CHINESE AUTHORITIES.

DO NOT USE HOSES/PIPES ATTACHED TO THIS ASSEMBLY TO REMOVE FROM STILLAGE OR CARRY COMPONENT.

NO CHANGES TO TOOLING, COMPONENTS, ASSEMBLY PROCESS OR CONTROL PLANS TO BE UNDERTAKED WITHOUT PRIOR CONSULTATION AND AGREEMENT BY JAGUAR LANDROVER FUEL SYSTEMS ENGINEERING AND STA.

SERVICE NOTE:
IF ITEM 5 FLNG FU/TNK SDR & OLET TUB MTNG (FLANGE) IS REMOVED OR DISTURBED IN SERVICE A NEW GSKT FU/TNK SDR ITEM 3 MUST BE USED.
REFER TO SHEET 3 FOR CORRECT ORIENTATION REPLACEMENT OF ITEM 4 RG - FU/TNK.

▽ CONTROL ITEM - THE ▽ ALSO IDENTIFIES CRITICAL CHARACTERISTICS DESIGNATED BY THE CROSS FUNCTIONAL TEAMS DEVELOPING THE PRODUCT. THESE AND ADDITIONAL CRITICAL CHARACTERISTICS IDENTIFIED BY PROCESS REVIEWS MUST APPEAR ON THE CONTROL PLANS ACCORDING TO QS-9000. THESE CONTROL PLANS REQUIRE PRODUCT ENGINEERING APPROVAL.

| LTRS | REVISIONS | | |
|---|---|---|---|
| ORIGINATOR | CHECKER | ENGR APP | MATL APP |
| RELEASE OF PART EX53-9K007-AA UEP2 E 50020723 000 111024 | | | |
| AWATSO38 | SWRIGH65 | GVOICE | MATSENG |
| RELEASE OF PART EX53-9K007-AB UEP2 E 50037352 000 120728 | | | |
| PATHERTO | SWRIGH65 | GVOICE | MATSENG |
| RELEASE OF PART EX53-9K007-AC UEP2 E 50045331 000 121024 | | | |
| PATHERTO | SWRIGH65 | GVOICE | MATSENG |
| RELEASE OF PART EX53-9K007-AD UEP2 E 50047477 000 121130 | | | |
| PATHERTO | SWRIGH65 | GVOICE | MATSENG |

| | | | |
|---|---|---|---|
| REFERENCE | DS-X152-100101-P01-14 | | |
| PART MUST COMPLY WITH RESTRICTED SUBSTANCE MANAGEMENT STANDARD STJLR.99.9999 TO SAFEGUARD HEALTH, SAFETY AND THE ENVIRONMENT | | | |
| DRAFTED IN ACCORDANCE WITH JAGUAR LAND ROVER PLM STANDARDS CURRENT AT INITIAL RELEASE | | 3RD ANGLE PROJ DIMENSIONS ARE IN MILLIMETRES | |
| CAD TYPE K-CATIA5 | CAD LOC. TCe | CAD FILE EX53-9K007-A-DWG-01 REV ; 6 | DTMC IS MASTER |
| DESIGN PATHERTO | DETAIL PATHERTO | DRAWING EX53-9K007-AD | SHT 1 OF 3 |
| CHECKED SWRIGH65 | SAFETY N/A | TITLE TNK & SDR ASY FUL | |
| SCALE 1:2 | DATE 20121008 | | SIZE A1 |

JAGUAR CARS LIMITED LAND ROVER

DO NOT SCALE FROM DRAWING PRINTED COPIES ARE UNCONTROLLED