INFORMATION REDACTED PURSUANT TOTHE FREEDOM
OF INFORMATION ACT (FOIA), 5 U.S.C.552(B)(6)

This file represents a consolidation of multiple files sent by the manufacturer. Please use the bookmarks to navigate to each file. (Each bookmark label is the name of the original file.)

Response to Request 11

	a.	b.	c.	d.	e.	f.
Action number	**Action title**	**Start date (actual or planned)**	**End date (actual or expected)**	**Summery of the subject and objective of the action;**	**Engineering group(s)/supplier(s) responsible for designing and conducting the action**	**A summary of the findings and/or conclusions resulting from the action**
1	Analysis of sister parts	CW 2/2018	CW 10/2018	Collect and evaluate sister parts from the same production dates as the two seat belts in question, check for basic webbing requirements	R&D VW	Visual inspection of all parts, two parts tested at ZF-TRW, no deviations
2	Pretest MGA	CW 44/2017	CW 44/2017	Crash test according to NCAP Standard	R&D VW	There was a minor belt damage observed. Test results fullfilled FMVSS 208 requirements.
3	Official Test at MGA	CW 48	ongoing	Analysis available data. Collect and evaluate the parts from the official test for indepth analysis.	R&D VW	It is assumed that the safety belt damage is due to the routing of the data cable/wiring harness. Parts are not available for inspection.
4	Official Test at TRC	CW 50	ongoing	Analysis available data. Collect and evaluate the parts from the official test for in depth analysis.	R&D VW	Dislocation of the center console. It is assumed that the safety belt damage is due to the routing of the data cable/wiring harness. Parts are not available for inspection.
5	Comparision of webbing	January 8th, 2018	January 15th, 2018	Material comparison of webbing from 1. MGA Pretest 2. VW Tiguan Release test 3. Productionsample March 6th 2017 4. Productionsamble November 11th 2017	VW quality labratory	No significant deviations between samples provided
6	surface treatment of webbing?	CW 3/2018	CW 7/2018	Investigate if the samples contained low friction webbing 1. VW internal Retest 2. Sister part (from same production lot) 3. Passenger Belt from sister part	ZF-TRW	No significant deviations between samples provided, all parts have low friction webbing
7	Homologation of alternative Seat belt assembly	CW 2	CW 12	Self certification of standard tongue design at ZF-TRW as backup solution	ZF-TRW	Ongoing
8	Sled Tests	CW 52/2017	CW 5/2018	Validate the hypothesis of test related belt damage and evaluate various influences to the system	R&D VW	See response to request 12
9	Retest VW internal	January 11th, 2018	January 11th, 2018	VW internal retest of the NCAP Tests with VW standard cable routing	R&D VW	Belt system worked as designed
10	Retest at MGA	January 18th, 2018	January 18th, 2018	Retest at MGA of the NCAP Tests with VW standard cable routing	R&D VW	Belt system worked as designed
11	5 Sled Tests with Autoliv CLT	CW 11	CW 12	Sled tests to compare performance of Autoliv CLT to ZF-TRW CLT	R&D VW	Ongoing
12	Crashtest Standard Tongue			Crash test comparison standard tongue confirmation of sled test results with standard tongue in Vehicle	R&D VW	Ongoing

Moderate Overlap Frontal Crashworthiness Evaluation

Crash Test Protocol (Version XVIII)

July 2017

988 Dairy Road
Ruckersville, VA 22968
+1 434 985 4600

iihs.org

MODERATE OVERLAP FRONTAL CRASHWORTHINESS EVALUATION
CRASH TEST PROTOCOL (VERSION XIV)

Supporting documents for the Insurance Institute for Highway Safety (IIHS) frontal offset crash test program are available from the technical protocols section of the IIHS website.

DOCUMENT REVISION HISTORY

A history of revisions to this document is provided in Appendix B.

TEST CONDITIONS

Impact Speed and Overlap

Offset barrier crash tests are conducted at 64.4 ± 1 km/h (40 ± 0.6 mi/h) and 40 ± 1 percent overlap. For verification test results submitted by auto manufacturers, the impact speed can exceed the 1 km/h tolerance. The test vehicle is aligned with the deformable barrier such that the right edge of the barrier face is offset to the left of the vehicle centerline by 10 ± 1 percent of the vehicle's width (Figure 1). The vehicle width is defined and measured as indicated in the Society of Automotive Engineers (SAE, 2009) Surface Vehicle Recommended Practice J1100, which states, "The maximum dimension measured between the widest part on the vehicle, excluding exterior mirrors, flexible mud flaps, and marker lamps, but including bumpers, moldings, sheet metal protrusions, or dual wheels, if standard equipment."

Figure 1
Vehicle Overlap with Deformable Barrier

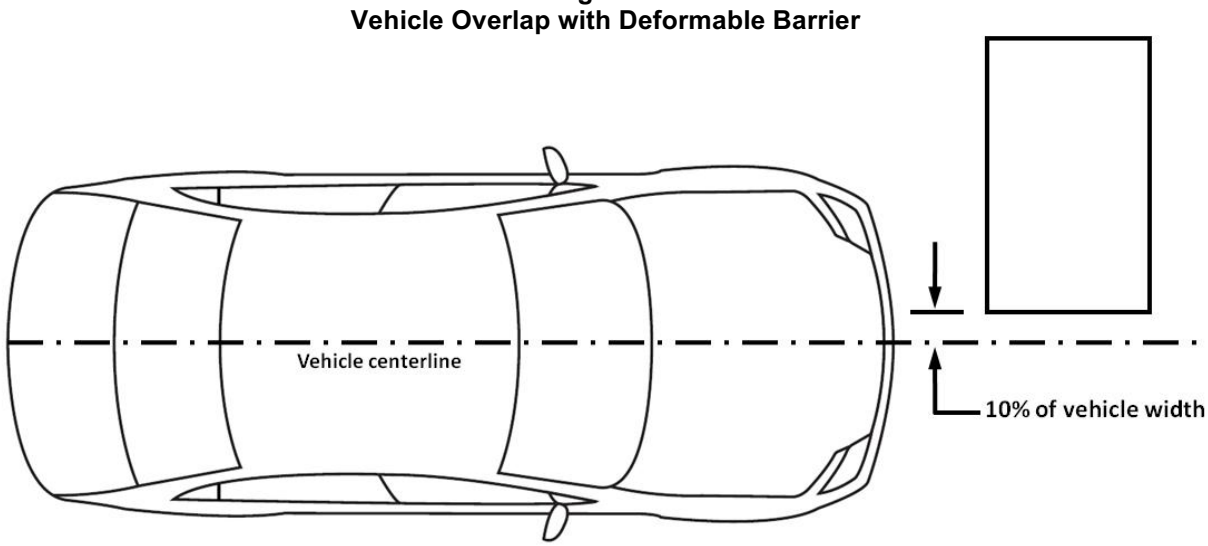

The vehicle is accelerated by the propulsion system at an average of 0.3 g until it reaches the test speed and then is released from the propulsion system 25 cm before the barrier. The onboard braking system, which applies the vehicle's service brakes on all four wheels, is activated 1.0 second after the vehicle is released from the propulsion system.

Barrier Composition and Preparation

The barrier is composed of three elements: base unit, extension, and deformable face (Figure 2). The base unit is 184 cm high, 366 cm wide, and 542 cm deep. It is composed of laminated steel and reinforced concrete with a total mass of 145,150 kg. The extension is 91 cm high, 183 cm wide, and 125 cm deep. It is made of structural steel and has a 1.9-cm thick piece of plywood attached to the 4.5-cm thick face plate.

© 2016 Insurance Institute for Highway Safety
988 Dairy Rd, Ruckersville, VA 22968. All rights reserved.

The deformable face is 1 m wide and consists of a bumper element of 1.723 MPa honeycomb material attached to a base of 0.345 MPa honeycomb material. The face is attached to the extension at a height of 20 cm from the ground. The profile (height and depth) of the deformable face is shown in Figure 3.

Figure 2
Deformable Barrier Elements

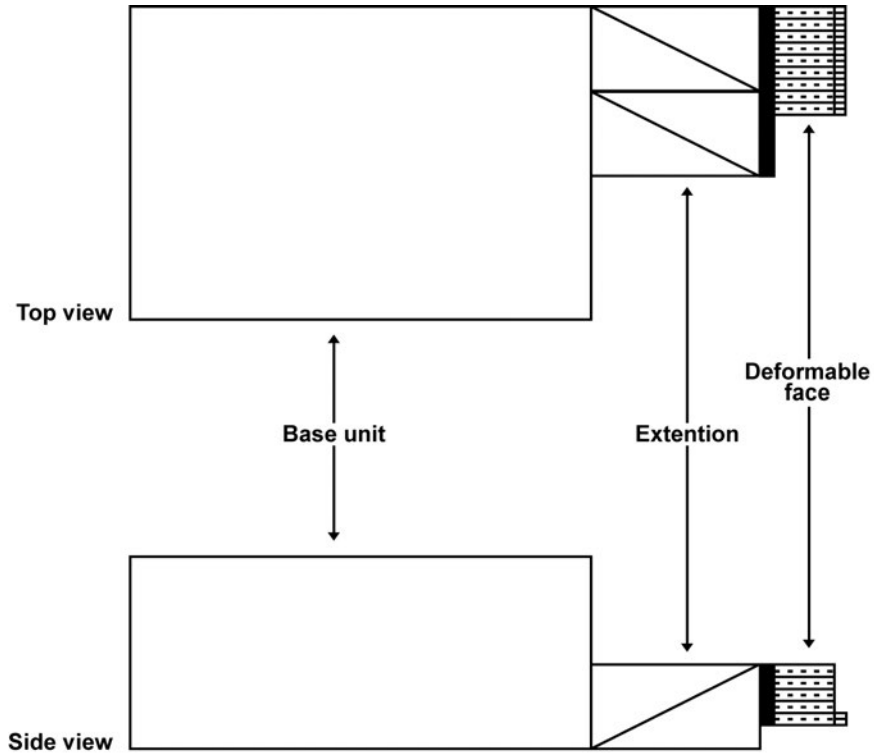

Figure 3
Deformable Barrier Face Profile and Dimensions

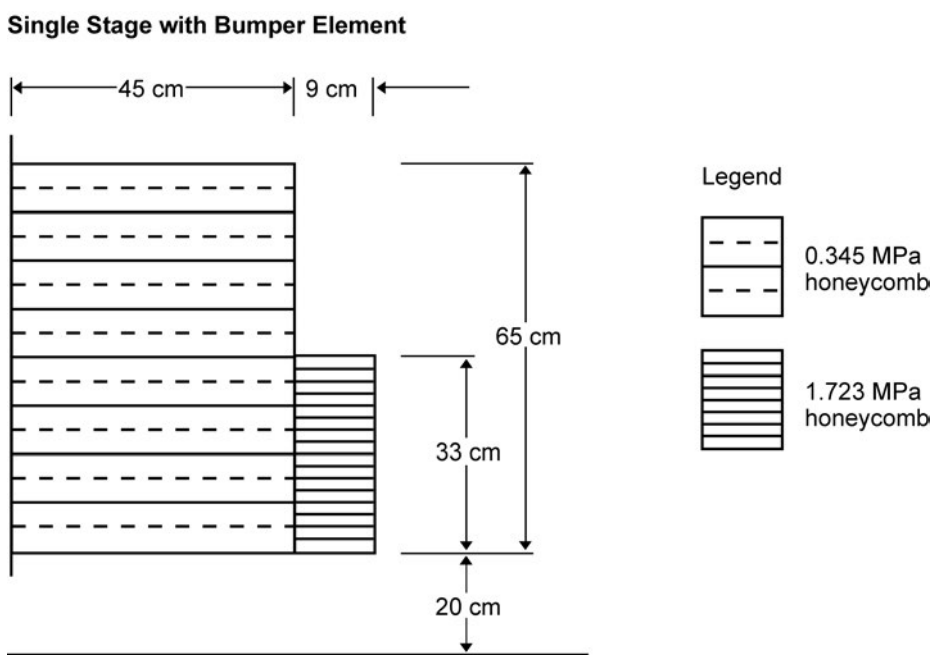

© 2016 Insurance Institute for Highway Safety
988 Dairy Rd, Ruckersville, VA 22968. All rights reserved.

Inch tape (1-inch increments alternating in black and yellow) is applied to the right and leading edges of the top surface of both the bumper element and base to highlight them for the overhead camera views. In addition, both barrier surfaces are marked with a 61-cm length gage consisting of two circular photographic targets (yellow and black reference points).

Test Vehicle Preparation

Each vehicle is inspected upon arrival at the research center. Vehicles are checked for evidence of prior collision damage or repair. Each vehicle is further examined to verify that it is in satisfactory operating condition and to note defects such as missing parts, maladjustment, or fluid leaks. If directly relevant to testing, such deficiencies are corrected or a replacement vehicle is procured.

All engine and transmission fluids are drained from the vehicle prior to the test. The gasoline is removed from the fuel tank and fuel lines and replaced with Stoddard solvent to 90-95 percent of useable capacity. The engine is started for short period to ensure the Stoddard solvent has filled the fuel lines. The electrolyte is drained from the battery. The air conditioning system's refrigerant is recovered by a means that complies with applicable environmental regulations.

High-voltage batteries in vehicles with full-electric drivetrains are tested at a state of charge (SoC) of 12.5 percent (± 2.5 percent), with a minimum of 25 miles of travel capacity on the battery. To avoid the possibility of the hybrid system attempting to begin a charge cycle, (i.e. engine start), the high-voltage batteries in hybrid vehicles will be tested at the minimum SoC recommended by the manufacturer. Maintenance fuses are not removed, but additional precrash and postcrash precautions specified by the vehicle manufacturer are followed. Equipment will be added to the high-voltage system in accordance with manufacturer recommended procedures for monitoring electrical isolation as per FMVSS 305. Thermocouple(s) also will be attached to the high-voltage battery to detect temperature increases that may indicate a thermal runaway condition.

The front of the vehicle is attached to the propulsion system via chains that are either attached to steel hooks welded to the left and right sides of the subframe or engine cradle, or to flexible straps that are wrapped around the left and right sides of the suspension, subframe, or engine cradle. The rear of the vehicle is attached to the propulsion system with a nylon strap and ratchet strap assembly. The front and rear attachment hardware weighs 10.0 kg. An aluminum instrumentation rack, which supports the test equipment, is installed in the cargo area of the vehicle. The carpeting in this area is removed to allow access to the floor. If necessary, the spare tire and accessory jack may be removed to permit installation of the instrumentation rack. The following test equipment is installed on the instrumentation rack located in the cargo area:

> ***Onboard emergency braking system:*** When activated, this system applies pressurized nitrogen gas against the brake fluid in the lines to the rear wheels. The remaining brake fluid in the master cylinder is removed. Flexible hoses connect the emergency braking system to the brake lines in the engine compartment. The onboard braking system weighs 10.6 kg.
>
> ***12-volt battery and monitoring system:*** This system supplies electrical power for the vehicle, emergency braking system, Diversified Technical Systems (DTS) data acquisition system (DAS), and wireless bridge for DAS communication. The system weighs 35.2 kg. The wireless device for DAS-to-network communication is mounted to the outside of the vehicle and weighs 1.5 kg.
>
> ***On-board lighting system:*** This system includes an array of on-board lights and its electrical power supply. The lighting system is installed when a vehicle is equipped with a side curtain airbag that is expected to deploy during the crash test and obscure camera views specified in this protocol. The

© 2016 Insurance Institute for Highway Safety
988 Dairy Rd, Ruckersville, VA 22968. All rights reserved.

system provides additional lighting for off-board high-speed cameras shooting from angles that are not sufficiently illuminated by the crash hall lighting system. The lighting system weighs 18.0 kg.

The test weight of the vehicle is 100-175 kg greater than the measured curb weight (weight of the vehicle as delivered from the dealer with full fluid levels) of the vehicle. If the vehicle test weight needs to be increased to fall within the range, steel plates are added to the instrumentation rack. If the vehicle test weight needs to be decreased, nonessential, nonstructural items are removed from the rear of the vehicle.

A steel plate is welded to the floor of the rear seating area along the centerline of the vehicle for mounting accelerometers. The carpeting in this area is removed to allow access to the floor. If floormats are standard or offered as an option through the manufacturer or dealership, a floormat is installed only in the driver footwell.

The antilock braking system (if equipped) and daytime running lights (if equipped) are disabled by means of removing fuses or relays to these devices to reduce the electrical power required for the test.

A plastic block containing an array of high-intensity light-emitting diodes (LED) is attached to the hood of the vehicle with sheet metal screws. The LEDs are illuminated when the vehicle first contacts the barrier.

A pressure-sensitive tape switch is applied to the vehicle such that it makes first contact with the barrier during the crash. Pressure applied to this tape completes an electrical circuit that signals the start of the crash (time-zero) for the data acquisition system and illuminates the LEDs mounted on the hood.

The exterior surfaces of the vehicle are trimmed with inch tape and photographic targets to facilitate analysis of the high-speed crash films (Figure 4). The scheme consists of four 61-cm length gages in four separate reference planes: the surface of the roof, the surface of the hood, the surface of the driver door, and a vertical plane passing through the centerline of the driver seat. The location of the vehicle accelerometers and the location of the vehicle's precrash center of gravity are marked with photographic targets applied to the appropriate top surfaces of the vehicle. An additional target also is placed at the rear of the vehicle on the centerline. The locations of the driver door latch, left rear door latch, and driver shoulder belt upper anchorage D-ring are marked on the side surfaces with photographic targets. The steering wheel is highlighted with inch tape, and the left front tire is highlighted with white paint. To determined vehicle alignment with the barrier at impact, inch tape is placed at 39 and 41 percent of vehicle width

The driver's head restraint (if adjustable) is adjusted upward until the top of the head restraint is level with the top of the dummy's head. If the head restraint lacks sufficient height adjustment to reach the top of the dummy's head, the test is conducted with the head restraint set at its highest setting. The head restraint height adjustment locking mechanism (if equipped) is examined to ensure the mechanism has engaged. All manually adjustable head restraint tilting mechanisms are adjusted to their full-rearward position during the test.

The driver seat manually adjustable inboard armrest (if equipped) is adjusted to its lowered position. For vehicles equipped with multiple locking armrest positions, the position that results in the top surface of the armrest being closest to parallel with ground is chosen.

All doors are fully latched but not locked. However, if the vehicle is equipped with automatically locking doors that cannot be set to remain unlocked when the vehicle is in forward motion, the door locks are kept in their automatic state. All side windows are lowered to their lowest position, the ignition is turned to its on position, and the transmission is shifted into its neutral position prior to the test.

© 2016 Insurance Institute for Highway Safety
988 Dairy Rd, Ruckersville, VA 22968. All rights reserved.

Figure 4
Exterior Surface Marking

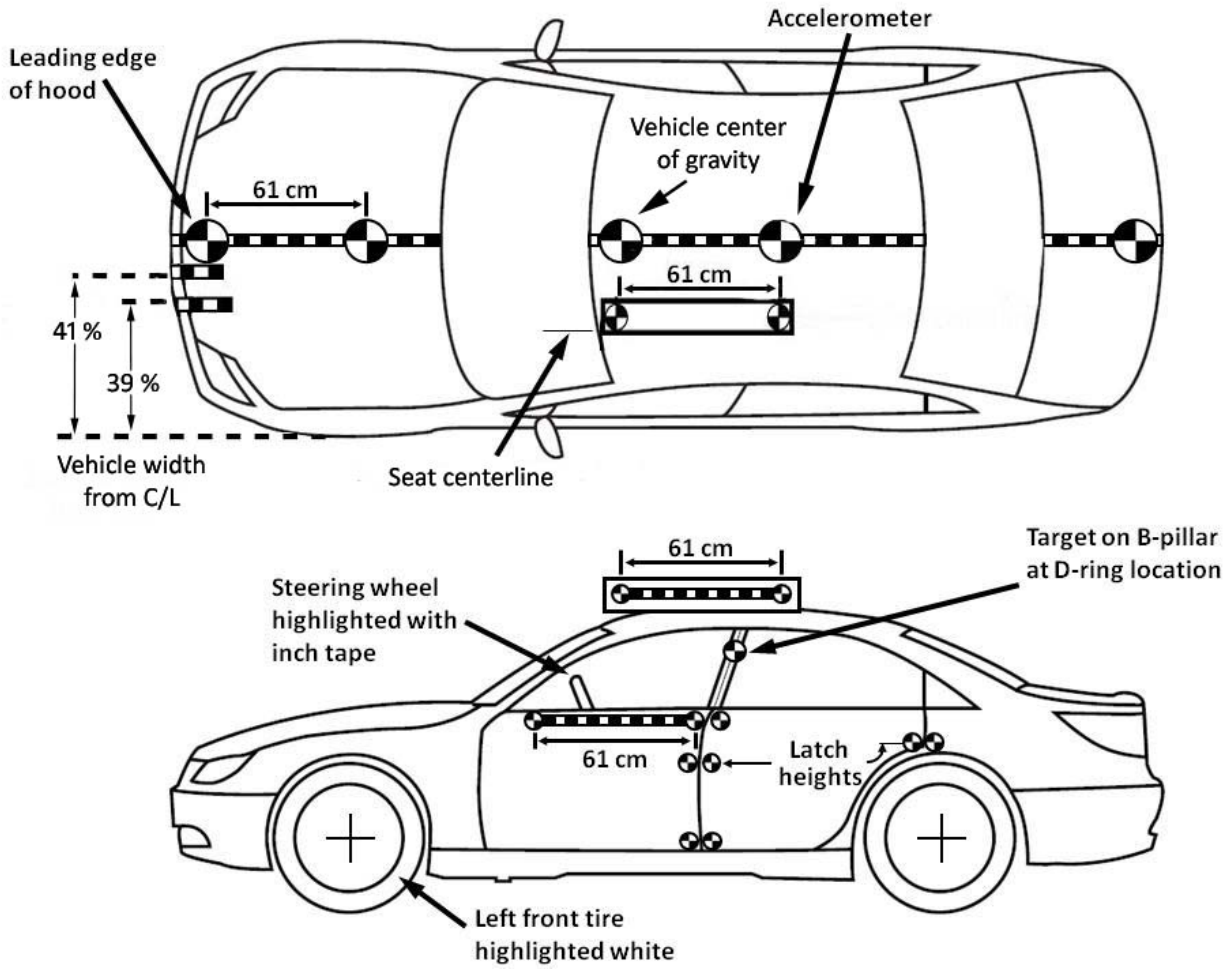

Crash Dummy Preparation and Setup

A 50th percentile male Hybrid III dummy (49 *CFR* 572 (E)) with instrumented lower legs is positioned in the driver seat according to the *Guidelines for Using the UMTRI ATD Positioning Procedure for ATD and Seat Positioning (Version V)* (IIHS, 2004).

The dummy is equipped with feet and ankles described in the final rule incorporating Hybrid III dummy modifications (Docket 74-14 Notice 104; *FR* vol. 61, no. 249, pp. 67953-67962). The feet have been further modified to include two accelerometers, and the ankles have been modified to prevent metal-to-metal contact that results from bottoming of the ankle bumper (Humanetics Innovative Solutions, Inc., part numbers 78051-653-H and 78051-654-H)

The dummy's knees are equipped with ball-bearing sliders, and the neck is fitted with a neck shield. In addition, the dummy's thoracic spine has been modified to accommodate an onboard data acquisition system (DTS TDAS G5). The mass and moments of inertia of the modified thoracic spine are similar to those of the standard dummy.

© 2016 Insurance Institute for Highway Safety
988 Dairy Rd, Ruckersville, VA 22968. All rights reserved.

The dummies used in these tests are calibrated according to 49 *CFR* 572 (E) after being subjected to no more than five crash tests. Additionally, individual parts are recalibrated if levels recorded during a test exceed the higher of published injury reference values or the values achieved in dummy certification tests, or if postcrash inspection reveals damage. All visible damage is repaired before the dummy is used again.

The dummy and vehicle are kept in a temperature controlled area where the temperature is maintained at 20.0-22.2 degrees Celsius and the relative humidity at 10-70 percent for at least 16 hours prior to the test. The driver seat belt is fastened around the dummy. For vehicles with continuous-loop lap/shoulder seat belts, the slack from the lap portion of the driver seat belt is removed and the webbing is pulled fully out of the retractor and allowed to retract under tension a total of four times. The lap belt slack is then removed again with a small pulling force. For vehicles with separate lap and shoulder seat belt retractors, the webbing from each is pulled fully out of the retractor and allowed to retract under tension a total of four times. The dummy's head, knees, and shins are colored with grease paint to facilitate postcrash identification of impacts with the vehicle interior. Photographic targets are placed on both sides of the head to mark the location of its center of gravity.

Photography

Still Photography

The precrash and postcrash conditions of each test vehicle are photographed. Two precrash views and two postcrash views show the side and left front quarter of the test vehicle.

Additional photographs document the precrash position of the driver dummy, including close-up views of the dummy's legs.

Three standard views of the vehicle in its postcrash position in front of the barrier are recorded. Additional photographs document the postcrash position of the driver dummy.

High-Speed Motion Picture Photography

Motion picture photography is made of the test with six high-speed digital imagers along with real-time cameras. The coordinates and lens focal length of each high-speed camera are described in Table 1. All high-speed imagers record at 500 frames per second. The positions of all cameras are shown in Figure 5.

Table 1
Crash Hall High-Speed Cameras – Coordinates, Focal Points, and Settings

	A	B	C	D	E	F
Camera Position	**Overhead**	**Rear Oblique**	**Wide Left**	**Medium Left**	**Barrier**	**Passenger Tight**
Coordinate X (cm)	-33	-2031	-159	-157	189	-70
Coordinate Y (cm)	10	517	1410	1369	70	-1543
Coordinate Z (cm)	910	152	150	118	285	135
Focal length (mm)	35	200	50	100	50	135

© 2016 Insurance Institute for Highway Safety
988 Dairy Rd, Ruckersville, VA 22968. All rights reserved.

Figure 5
High-Speed Camera Positions

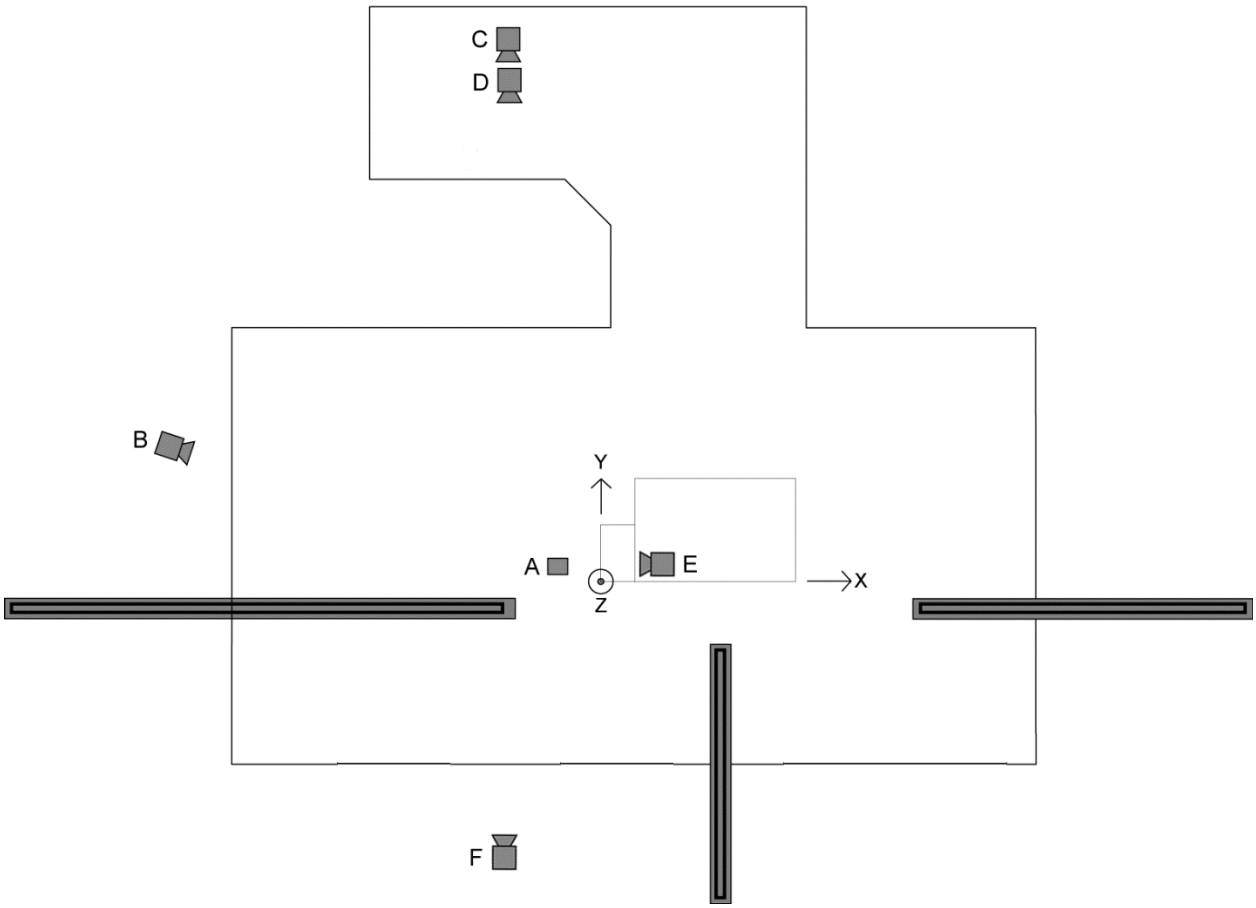

MEASUREMENTS AND OBSERVATIONS

Test Weight

The test weight of the vehicle is measured at each of the four wheels. The vehicle is weighed with all test equipment installed including the driver dummy. The front and rear axle weights are used to determine the longitudinal position of the center of gravity for the test vehicle.

Impact Speed

The impact speed is determined by averaging two speed trap measurements. Both speed traps measure the average velocity of the vehicle at 1-1.5 m before impact with the barrier. The propulsion system also has an optical speed measuring device that serves as a backup to the two speed traps. This device measures the speed of the hardware attaching the vehicle to the propulsion system immediately prior to the vehicle's release from the propulsion system before impact. The speed is clocked over a 1 m length of vehicle travel ending 0.5 m before the vehicle's release from the propulsion system.

© 2016 Insurance Institute for Highway Safety
988 Dairy Rd, Ruckersville, VA 22968. All rights reserved.

Overlap

The test overlap is verified from the video taken by the high-speed digital imager overhead view (position A in Figure 5). At the time of impact, the outboard edge of the deformable barrier (Figure 6) should fall within the 39 and 41 percent vehicle width inch tape on the front bumper of the vehicle. If the target falls outside of this area, additional analysis will be conducted to determine actual offset.

Figure 6
Determining Vehicle Overlap – Video Screen Shot

Vehicle Accelerations

The linear accelerations in three orthogonal directions (longitudinal, lateral, and vertical) of the vehicle's occupant compartment are measured by accelerometer arrays (three Endevco 7264A-2000 or 7264B-2000 accelerometers) and recorded by the TDAS G5 system. Positive vehicle accelerations are forward along the longitudinal axis, to the right along the lateral axis, and downward along the vertical axis. The data are presented filtered according to the channel frequency class (CFC) 60 as defined in SAE (2014) Surface Vehicle Recommended Practice J211/1.

Fuel System Integrity

Observations about fuel system integrity are recorded for each test. Any Stoddard fluid leaked from the fuel system within 1 minute after the impact is collected as the first sample. This typically is done by soaking up the fluid with an absorbent pad of known mass. The second sample of leaked Stoddard fluid is collected during the 5 minutes immediately following the collection of the first sample. This sample typically is collected in pans placed under the sources of identified leaks. The third sample is collected during the 25 minutes immediately following the collection of the second. The pans used to collect the second sample are replaced with clean empty pans. The volume of each sample is determined by dividing the weight of the sample by the density of Stoddard fluid (790 g/l). The elapsed time is determined using a stopwatch. The entire process is recorded with a video camera equipped with an internal timer, which displays the time in each frame.

© 2016 Insurance Institute for Highway Safety
988 Dairy Rd, Ruckersville, VA 22968. All rights reserved.

High-Voltage System Integrity

Vehicles with a hybrid or full-electric drivetrain are monitored to ensure the high-voltage electrical system has not been compromised. Postcrash observations include a measure of electrolyte spillage (if any), battery retention, and electrical isolation of the high-voltage system as per FMVSS 305. Additionally, the battery temperature will be monitored to detect a rapid increase in temperature that may indicate a thermal runaway condition.

Intrusion Measurements

A total of 14 locations are marked on the driver side interior and exterior of the vehicle, and their longitudinal, lateral, and vertical coordinates are recorded using a coordinate measurement machine (CMM). These same marks are measured after the crash using the same reference coordinate system. Intrusion of the steering wheel, instrument panel, and footwell relative to the driver is calculated by subtracting the average component displacements (difference between precrash and postcrash coordinates) of the four seat-attachment bolts, which also were measured relative to the primary coordinate system, from the respective components of displacement for each of the target locations.

Coordinate System Definition

A right-handed, three-axis orthogonal coordinate system is used for these measures: longitudinal (front to rear is positive), lateral (left to right is positive), and vertical (bottom to top is positive). The precrash coordinate system is defined with the vehicle unloaded (no occupants) on a level floor. The plane of the ground is used to define the X-Y plane, and the two end points on the centerline of the roof are used to define the X axis.

Coordinates of three marked reference points inside the vehicle compartment are recorded precrash to establish the postcrash coordinate system. For most vehicles, the reference points will be taken on the vehicle structure below the rear passenger seatpan cushion.

Measurement Point Locations

The following are the locations for measuring vehicle intrusion:

> ***Steering column (one point):*** The marked reference is the geometric center of the steering wheel, typically on the airbag door. After the crash, this point is measured by folding the airbag doors back into their undeployed position. In most cases, this measurement is probably less than the maximum intrusion into the compartment. However, if the steering column has loosened (from release of adjustment lever), or completely separates from the instrument panel (due to shear module separation, for example) during the crash, the steering column postcrash measurement is taken by placing and holding the wheel and column in its approximate maximum dynamic position, upward and forward. High-speed video may be used to determine approximate steering column position; however, the video footage may not always show clearly where the column was during the crash, and in such cases other clues would be needed to reposition the column for measurement. In rare instances, it may not be possible to obtain any meaningful postcrash measurement.
>
> ***Lower instrument panel (two points):*** The left and right lower instrument panel (knee bolster) lateral coordinates are defined by adding 15 cm to and subtracting 15 cm from the steering column reference lateral coordinate, respectively. The vertical coordinate is the same for both left and right references and is defined as 45 cm above the height of the floor (without floormats). If the panel or

© 2016 Insurance Institute for Highway Safety
988 Dairy Rd, Ruckersville, VA 22968. All rights reserved.

knee bolster loosens or breaks away in the crash, the postcrash measurements are taken by pressing and holding the panel against the underlying structure.

Brake pedal (one point): The geometric center of the brake pedal pad (top surface). If the brake pedal is constructed so that it dangles loosely after the crash, the brake pedal is pushed straight forward against the toepan/floorpan and held there to take the postcrash measurement. If the pedal drops away entirely, no postcrash measurement is taken.

Toepan (three points): The vertical coordinate for all toepan measurement locations is the vertical coordinate of the brake pedal reference. The lateral coordinates of the left, center, and right toepan locations are obtained by adding 15 cm to, adding 0 cm to, and subtracting 15 cm from the brake pedal reference lateral coordinate, respectively. The longitudinal coordinate is measured, and a mark is temporarily placed at the locations on the toepan. A utility knife is used to cut a small "v" in the carpet and underlying padding at each point on the toepan. The point of the "v" is peeled back, and the exposed floor is marked and measured. The carpet and padding are then refitted prior to the crash.

Left footrest (one point): The vertical coordinate for the footrest measurement location is the vertical coordinate of the brake pedal reference. The lateral coordinate of the footrest is obtained by adding 25 cm to the brake pedal reference lateral coordinate. The same procedure described above for cutting the carpet is used to mark and measure the underlying structure. In cases where there is a specific footrest construct at the footrest measurement location, the construct is removed and the underlying structure is marked and measured. The construct is reinstalled prior to the crash.

Seat bolts (typically, four points): Each of the four (or fewer) bolts that anchor the driver seat to the floor of the vehicle.

A-pillar (one point): The A-pillar is marked on the outside of the vehicle at the same vertical coordinate as the base of the left front window.

B-pillar (one point): The B-pillar is marked on the outside of the vehicle at the longitudinal center of the pillar at the same vertical coordinate as the lower A-pillar mark.

Dummy Kinematics and Contact Locations

Dummy kinematics are studied by reviewing the high-speed film using a film analyzer. Contact of the dummy's head or knees with the vehicle interior are recorded on the basis of postcrash grease paint deposits.

The dummy is inspected in its undisturbed postcrash position. Any damage to the dummy or unusual dummy resting position information is noted. The locations of paint transferred from the dummy to the vehicle interior are noted.

The high-speed film record is used to estimate the time after the start of the crash that various events occur. For each event, the camera that provides the clearest view of the event is used. The start of the crash is considered to be the first frame in the film from each camera in which the LEDs mounted on the hood of the vehicle are illuminated. The time recorded for each event is based on the number of frames elapsed from the start of the crash and the nominal operating speed of the camera. For the cameras operating at 500 frames/second, the estimate of the crash's start time can be up to 2 ms late, and the event's time, as determined from the film, can be early or late by 2 ms. The time of the driver airbag deployment, full inflation, and first dummy contact are recorded as well as any other notable events.

© 2016 Insurance Institute for Highway Safety
988 Dairy Rd, Ruckersville, VA 22968. All rights reserved.

Dummy Responses

Each Hybrid III dummy is equipped with instrumentation for measuring the following:

Head

Triaxial accelerations (three Endevco 7264A-2000 (or 7264B-2000) accelerometers)
Triaxial angular rate sensors (three DTS ARS Pro – 18k)

Neck

A-P shear force
Axial force
A-P moments (Humanetics Innovative Solutions, Inc. Model 2564 or 1716A upper neck load cell)

Chest

Triaxial accelerations (three Endevco 7264A-2000 (or 7264B-2000) accelerometers)
Rib compression

Lower Extremities

Femur axial forces (Humanetics Innovative Solutions, Inc. Model 2121A load cell)
Tibia-femur displacements
Upper tibia A-P moments
Upper tibia L-M moments (Humanetics Innovative Solutions, Inc. Model 1583 load cell)
Lower tibia A-P moments
Lower tibia L-M moments
Lower tibia axial forces (custom Humanetics Innovative Solutions, Inc. Model 3093 load cell)
Biaxial foot accelerations (A-P and I-S) (two Endevco 7264A-2000 (or 7264B-2000) accelerometers)

All instruments are regularly calibrated to a known standard. Accelerometers, load cells, and angular rate sensors are calibrated every 12 months. All measurements recorded from these instruments comply with the recommendations of SAE (2007) Surface Vehicle Information Report J1733.

The DTS TDAS G5 data acquisition system is installed in the thorax of the Hybrid III dummy and used for dummy and vehicle data acquisition. A TDAS G5 iPort or DTS SLICE MICRO may be used for additional dummy or vehicle data acquisition. During the crash, all measurements are recorded in the system's random access memory with 16-bit resolution at a sample rate of 10 kHz. Signals in all channels convert simultaneously, so the time reference for different channels is not skewed. To ensure digital fidelity, all signals are filtered by an analog low-pass prefilter with a 3 kHz cutoff frequency.

After the data have been downloaded from the TDAS G5, any initial offset from zero is removed from each channel by computing the mean value for 100 data points preceding the crash event (from 50 to 40 ms before impact) for each channel and subtracting each mean from the respective data channel. The data are digitally filtered using the frequency response classes recommended in SAE (2014) Surface Vehicle Recommended Practice J211/1. Foot accelerations are filtered to SAE CFC 180. All filtering and subsequent calculations are executed using DIAdem (National Instruments Corporation).

In addition to summary metrics for each of the recorded data channels, the following calculations are made: vector resultant of the head acceleration, 3 ms clip of the vector resultant head acceleration, head injury criterion (HIC-36 and HIC-15), neck N_{ij} (calculated using formulas presented in 65 FR 30680), vector resultant of the spine accelerations, 3 ms clip of the vector resultant thoracic spine acceleration, viscous criterion, sternum deflection rate, vector resultant of the tibia bending moments (using the adjusted tibia A-P moments), tibia index (using the adjusted tibia A-P moments), and vector resultant of

© 2016 Insurance Institute for Highway Safety
988 Dairy Rd, Ruckersville, VA 22968. All rights reserved.

the foot accelerations. All calculations comply with the recommendations of SAE (2015) Surface Vehicle Recommended Practice J1727. The sternum deflection rate is calculated from the sternum deflection filtered to CFC 60.

REFERENCES

Insurance Institute for Highway Safety. 2004. Guidelines for using the UMTRI ATD positioning procedure for ATD and seat positioning (version V). Arlington, VA.

Society of Automotive Engineers. 2000. *2000 SAE Handbook; Vol. 3: On-Highway Vehicles and Off-Highway Machinery*. Warrendale, PA.

Society of Automotive Engineers. 2007. Surface Vehicle Information Report J1733; Sign convention for vehicle crash testing. Warrendale, PA.

Society of Automotive Engineers. 2009. Surface Vehicle Recommended Practice J1100; Motor vehicle dimensions. Warrendale, PA.

Society of Automotive Engineers. 2014. Surface Vehicle Recommended Practice J211/1; Instrumentation for impact test, Part 1: Electronic instrumentation. Warrendale, PA.

Society of Automotive Engineers. 2015. Surface Vehicle Recommended Practice J1727; Calculation guidelines for impact testing. Warrendale, PA.

Wellbourne, E.R. and Shewchenko, N. 1998. Improved measures of foot ankle injury risk from the Hybrid III tibia. *Proceedings of the 16th International Technical Conference on the Enhanced Safety of Vehicles*, 1618-26. Washington, DC: National Highway Traffic Safety Administration.

Zuby, D.S.; Nolan, J.M.; and Sherwood, C.P. 2001. Effect of Hybrid III leg geometry on upper tibia bending moments. SAE Technical Paper Series 2001-01-0169. *Biomechanics Research and Development* (SP-1577) Warrendale, PA: Society of Automotive Engineers.

© 2016 Insurance Institute for Highway Safety
988 Dairy Rd, Ruckersville, VA 22968. All rights reserved.

APPENDIX A

Dummy Clearance Measurement Definitions

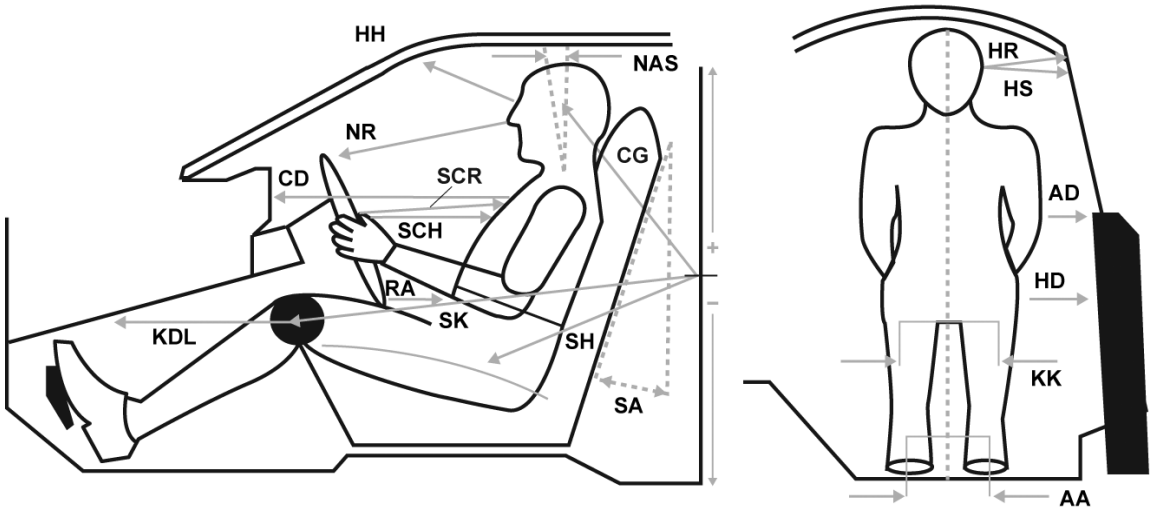

Location	Code	Definition of Measurement
Ankle to ankle	AA	Taken between the center points of both ankles, after the feet are placed per Institute protocol.
Arm to door	AD	Taken from the center point of the elbow to the first contact point of the door panel.
Chest to dash	CD	Taken from the clavicle adjustment holes in the chest to the point on the dash at level of chest landmark.
Head to A-pillar	HA	Horizontal measurement taken from the center of the outboard target to the A-pillar.
Hub to chest, minimum	HCM	Minimum horizontal distance measured from the hub to the dummy's chest.
H-point to door	HD	Taken from the H-point hole to the first contact point of the door panel.
Head to header	HH	Taken from center point between eyes to header directly in front of dummy.
Head to roof	HR	Taken from the center of the outboard target to the roof edge (not the upper edge of the car door), perpendicular to the long axis of the car. If a tape measure is held from the target and extends below the roof, the point to measure is at the low edge of the roof line, which will make contact with the tape measure.
Head to side window	HS	Taken from the center of the outboard target to the side window, measured horizontally and perpendicular to the long axis of the car. In cases where the window is not fully up, a flat bar should be placed across the window opening to simulate the position of the window.

continued

© 2016 Insurance Institute for Highway Safety
988 Dairy Rd, Ruckersville, VA 22968. All rights reserved.

Location	Code	Definition of Measurement
Knee to dash, left	KDL	Taken from the knee pivot point to the point on the dash that is directly level with the center of the knee.
Knee to dash, right	KDR	Taken from the knee pivot point to the point on the dash that is directly level with the center of the knee.
Knee to knee	KK	With the legs in a vertical plane after the feet are placed per Institute protocol, the measurement is taken from outside flange to outside flange of the knees. The minimum distance is 270 mm (10.6 inches).
Neck angle, seated	NAS	Taken from the neck when the dummy is seated across two of the "vertebral disks" of the neck.
Nose to rim	NR	Taken from the tip of the nose to the steering wheel rim at the 12 o'clock position.
Pelvis angle	PA	Taken from the instrumented pelvis sensor (if available) or by placing an inclinometer on the H-point bar, which is used to align the H-point with previous measurements.
Rim to abdomen	RA	Taken from the point where the bottom of the chest jacket and the abdominal insert meet to the steering wheel rim at the 6 o'clock position.
Seat back angle	SA	Taken on the head restraint posts of the driver's seat back unless otherwise directed by the manufacturer at which time it will be properly noted along with the measurement.
Steering wheel to chest, horizontal	SCH	Horizontal measurement taken from the center of the steering wheel to the dummy's chest.
Steering wheel to chest, reference	SCR	Taken from the center of the steering wheel to the center of the clavicle adjustment holes (on the Hybrid III dummies).
Striker to head center of gravity, horizontal	CGH	Horizontal measurement taken from the head center of gravity to the driver door striker. Value is negative if the head center of gravity is forward of the striker.
Striker to head center of gravity, lateral	CGL	Lateral measurement taken from the head center of gravity to the driver door striker.
Striker to head center of gravity, vertical	CGV	Vertical measurement taken from the head center of gravity to the driver door striker. Value is negative if the head center of gravity is below the striker.
Striker to H-point, horizontal	SHH	Horizontal measurement taken from the H-point to the driver door striker. Value is negative if the H-point is forward of the striker.
Striker to H-point, vertical	SHV	Vertical measurement taken from the H-point to the driver door striker. Value is negative if the H-point is below the striker.
Striker to knee	SK	Taken from the center point of the knee to the striker.
Striker to knee angle	SKA	Taken from the center point of the knee to the striker.
Torso recline angle	TRA	Taken from the H-point to the head's center of gravity

© 2016 Insurance Institute for Highway Safety
988 Dairy Rd, Ruckersville, VA 22968. All rights reserved.

APPENDIX B

Document Revision History

Revisions to Version XVIII of the protocol compared with Version XVII:
- Hybrid vehicle high-voltage batteries to be charged to manufacturer recommendations.

Revisions to Version XVII of the protocol compared with Version XVI:
- The high-voltage battery state of charge (SoC) for hybrid and full-electric vehicles was reduced from 95 to 12.5 percent prior to conducting a crash test.

Revisions to Version XVI of the protocol compared with Version XV:
- New vehicle offset tape scheme illustration, and description for determining vehicle overlap was added.
- Onboard brake activation time changed from 1.5 to 1.0 second from skate release.

Revisions to Version XV of the protocol compared with Version XIV:
- The weight of the onboard test equipment was updated.
- The photography section indicates that high-speed digital imagers now are used instead of high-speed film cameras. Crash hall positions of the cameras also have been updated.

Revisions to Version XIV of the protocol compared with Version XIII:
- Stoddard may now be added to the fuel system at any point in the vehicle preparation process. Previously, Stoddard could only be added to the vehicle up to 48 hours before the test.
- High-voltage systems found in vehicles with electric drivetrains are discussed in the Test Conditions and Measurements and Observations sections
- On-board lighting system specifications have been added to the Test Vehicle Preparation section.
- The allowable vehicle test weight range increased from 100-140 kg greater than measured curb weight to 100-175 kg. The increase range was required to accommodate an on-board lighting system.
- Data processing is now performed with the DIAdem software program.
- The title of the protocol was changed to "Moderate Overlap Frontal Crashworthiness Evaluation Crash Test Protocol."

Revisions to Version XIII of the protocol compared with Version XII:
- Impact speed and offset tolerances of ± 1 km/h and ± 1 percent have been added.
- Prior to the offset barrier test, some vehicles are used in the IIHS bumper test program.
- Several dummy clearance measures have been eliminated: head-to-windshield, neck angle (torso 90), and steering wheel-to-chest perpendicular. Striker-to-head center of gravity (horizontal, lateral, and vertical) and torso recline angle measures have been added.

Revisions to Version XII of the protocol compared with Version XI:
- Test vehicles are no longer used in the Institute's low-speed crash test program prior to being crashed. Descriptions of the low-speed tests and the vehicle repair process have been removed from the Test Vehicle Preparation section.
- In the Test Vehicle Preparation section, the weights for the front and rear attachment hardware and the 12-volt battery and monitoring system have been updated. The attachment hardware is 1 kg lighter and the battery and monitoring system is 4 kg heavier than those used in the previous protocol version. In addition, a 1.5 kg wireless device has been added to the vehicle.
- A heat-shrink material is being placed over the dummy ankle shafts to reduce the likelihood of leg sensor noise due to metal-to-metal contact that occurs when the foot reaches a mechanical stop.

© 2016 Insurance Institute for Highway Safety
988 Dairy Rd, Ruckersville, VA 22968. All rights reserved.

Specifications for the heat-shrink material are provided in the Crash Dummy Preparation and Setup section of this protocol.
- The in-dummy data acquisition system has been changed from a Denton IDDAS to a DTS TDAS G5 system.

Revisions to Version XI of the protocol compared with Version X:
- The reference list reflects recent updates to the *Guidelines for Using the UMTRI ATD Positioning Procedure for ATD and Seat Positioning (Version V)*.
- The 'reference medium left' high-speed film camera view has been eliminated.
- Precrash and postcrash bumper crush profiles have been eliminated.
- The seat pan points have been eliminated from precrash and postcrash intrusion measures.
- The coordinate measurement machine used for intrusion measures has changed from FARO Technologies Inc. Bronze Series FARO ARM to Romer CimCore Inc. 3000i Series Arm.
- The method of defining the coordinate system for intrusion measures with a coordinate measurement machine has changed.
- Seat belt retractor spool-out and crash tensioner spool-in measures have been eliminated.

Revisions to Version X of the protocol compared with Version IX:
- The driver dummy seat positioning follows the *Guidelines for Using the UMTRI ATD Positioning Procedure for ATD and Seat Positioning (Version IV)* instead of placing the driver seat in the midtrack full-down position.

Revisions to Version IX of the protocol compared with Version VIII:
- Underbody photography, underbody deformation measurements, and rotating the test vehicle onto its passenger side to check for postcrash fuel spillage and to photograph the overhead view all were eliminated.
- Prior to the offset barrier crash test, test vehicles are subject to a frontal impact at 5 mi/h (8 km/h) into either a flat barrier or an angle barrier (formerly angle barrier only).

© 2016 Insurance Institute for Highway Safety
988 Dairy Rd, Ruckersville, VA 22968. All rights reserved.

Small Overlap Frontal Crashworthiness Evaluation

Crash Test Protocol (Version VI)

July 2017

988 Dairy Road
Ruckersville, VA 22968
+1 434 985 4600

iihs.org

SMALL OVERLAP FRONTAL CRASHWORTHINESS EVALUATION
CRASH TEST PROTOCOL (VERSION VI)

This test protocol applies to driver and passenger-side small overlap crash tests, with the passenger-side documentation included as an appendix. Other supporting documents for the Insurance Institute for Highway Safety (IIHS) small overlap frontal crash test program are available from the technical protocols section of the IIHS website.

DOCUMENT REVISION HISTORY

A history of revisions to this document is provided in Appendix F.

TEST CONDITIONS

Impact Speed and Overlap

Small overlap barrier crash tests are conducted at 64.4 ± 1 km/h (40 ± 0.6 mi/h) and 25 ± 1 percent overlap. The test vehicle is aligned with the rigid barrier such that the right edge of the barrier face is offset to the left of the vehicle centerline by 25 ± 1 percent of the vehicle width (Figure 1). The vehicle width is defined and measured as indicated in Society of Automotive Engineers (SAE, 2009) Surface Vehicle Recommended Practice J1100, which states, "The maximum dimension measured between the widest part on the vehicle, excluding exterior mirrors, flexible mud flaps, and marker lamps, but including bumpers, moldings, sheet metal protrusions, or dual wheels, if standard equipment."

Figure 1
Vehicle Overlap with Flat 150 Small Overlap Barrier

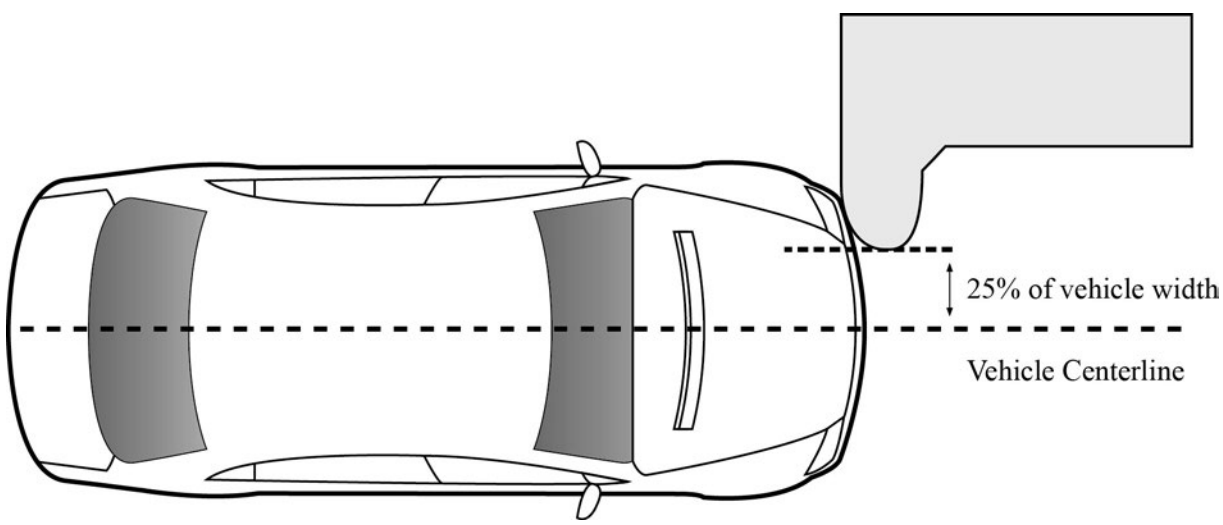

The vehicle is accelerated by the propulsion system at an average of 0.3 g until it reaches the test speed and then is released from the propulsion system approximately 25 cm before the barrier. The onboard braking system, which applies the vehicle's service brakes on the rear wheels, is activated 1 second after the vehicle is released from the propulsion system.

Barrier Design

The rigid barrier is composed of a vertical steel plate, with a radius on the right edge (Figures 2 and 3). The front plate has a thickness of 38.1 mm, and is 1000 mm wide to the point at which the 150 mm radius

© 2017 Insurance Institute for Highway Safety
988 Dairy Rd, Ruckersville, VA 22968. All rights reserved.

begins. This radius continues over a 115 degree arc. The side of the barrier is set back from the radius to prevent secondary contacts with the vehicle. The barrier rests on the floor, has a height of 1524 mm, and is attached to a base unit. The base unit is 184 cm high, 366 cm wide, and 542 cm deep. It is composed of laminated steel and reinforced concrete with a total mass of 145,150 kg. The rigid barrier is mounted to the right side of the base unit, which allows continued forward motion of the vehicle after primary engagement with the rigid barrier. Because this front plate is the only surface of the barrier that should contact the vehicle, details on the support structure are not included below, but a drawing package of the complete barrier design is available on the IIHS website.

Figure 2
Flat 150 Barrier, Top and Isometric Views

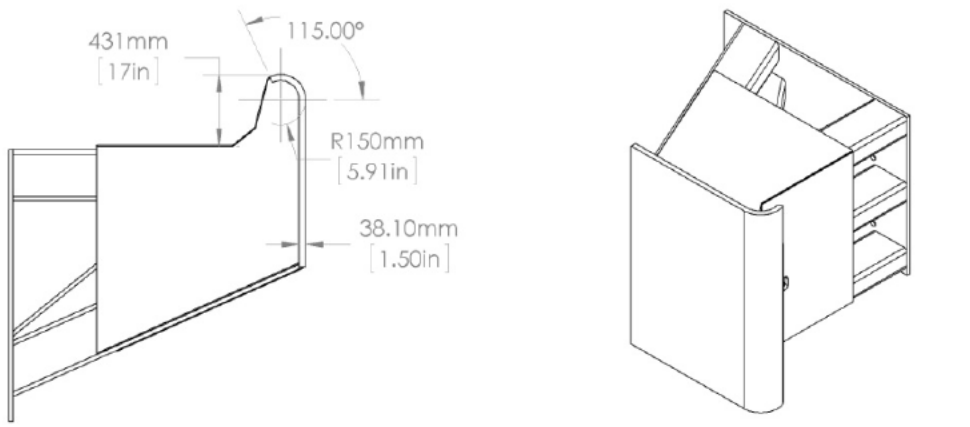

Figure 3
Flat 150 Barrier, Side and Front Views

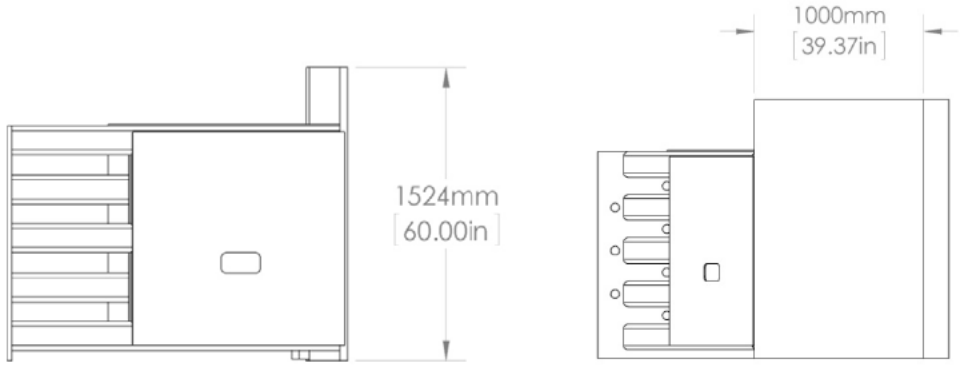

Test Vehicle Preparation

Each vehicle is inspected upon arrival at the research center. Vehicles are checked for evidence of prior collision damage or repair. Each vehicle is further examined to verify that it is in satisfactory operating condition and to note defects such as missing parts, maladjustments, or fluid leaks. If directly relevant to testing, such deficiencies are corrected or a replacement vehicle is procured.

All engine and transmission fluids are drained from the vehicle prior to the test. The gasoline is removed from the fuel tank, and fuel lines are replaced with Stoddard solvent to 90-95 percent of useable capacity. The engine is started for a short period to ensure the Stoddard solvent has filled the fuel lines. The electrolyte is drained from the battery. The air conditioning system refrigerant is recovered by a means

© 2017 Insurance Institute for Highway Safety
988 Dairy Rd, Ruckersville, VA 22968. All rights reserved.

that complies with applicable environmental regulations. The left front axle boots and grease are removed.

High-voltage batteries in vehicles with full-electric drivetrains are tested at a state of charge (SoC) of 12.5 percent (± 2.5 percent), with a minimum of 25 miles of travel capacity on the battery. To avoid the possibility of the hybrid system attempting to begin a charge cycle, (i.e. engine start), the high-voltage batteries in hybrid vehicles will be tested at the minimum SoC recommended by the manufacturer. Maintenance fuses are not removed, but additional precrash and postcrash precautions specified by the vehicle manufacturer are followed. Equipment will be added to the high-voltage system in accordance with manufacturer recommended procedures for monitoring electrical isolation as per FMVSS 305. Thermocouple(s) also will be attached to the high-voltage battery to detect temperature increases that may indicate a thermal runaway condition.

Multiple onboard video cameras are placed in the vehicle. Typically, one is attached to the right front passenger door, just aft of the A-pillar, one to the rear passenger door, and two are attached to the roof in the rear seating area. Lights for these cameras also are attached to the vehicle. The total weight of the four digital cameras, mounting hardware, camera router, cables, and lights is 25.5 kg.

The front of the vehicle is attached to the propulsion system via chains that are either attached to steel hooks welded to the left and right sides of the subframe or engine cradle, or to flexible straps that are wrapped around the left and right sides of the subframe or engine cradle (not to suspension components). The rear of the vehicle is attached to the propulsion system with a nylon strap and ratchet strap assembly. The front and rear attachment hardware weighs 10.0 kg.

An aluminum instrumentation rack, which supports the test equipment, is installed in the cargo area of the vehicle. The carpeting in this area is removed to allow access to the floor. If necessary, the spare tire, accessory jack, tool compartments, and third row seats may be removed. The following test equipment is installed on the instrumentation rack located in the cargo area:

> ***Onboard emergency braking system:*** When activated, this system applies pressurized nitrogen gas against the brake fluid in the lines to the rear wheels. The remaining brake fluid in the master cylinder is removed. Flexible hoses connect the emergency braking system to the brake lines in the engine compartment. The onboard braking system weighs 10.6 kg.
>
> ***12-volt battery and monitoring system:*** This system supplies electrical power for the vehicle, emergency braking system, the Diversified Technical Systems (DTS) data acquisition system (DAS), and a wireless bridge for DAS communication. The system weighs 35.2 kg. The wireless device for DAS-to-network communication is mounted to the outside of the vehicle and weighs 1.5 kg.
>
> ***High-speed camera and onboard lighting power supply:*** This system supplies electrical power to the onboard high-speed video cameras and LED lighting. The weight of the camera/lighting system is 26.0 kg.

The test weight of the vehicle is 125-175 kg greater than the measured curb weight of the vehicle (weight of the vehicle as delivered from the dealer with full fluid levels). If the vehicle test weight needs to be increased to fall within the range, steel plates are added to the instrumentation rack. If the vehicle test weight needs to be decreased, nonessential, nonstructural items are removed from the rear of the vehicle (e.g., muffler, tailpipe).

A steel plate is welded in the rear seating area along the centerline of the vehicle for mounting accelerometers. The carpeting or seat cushion in this area may removed to allow access to the underlying

© 2017 Insurance Institute for Highway Safety
988 Dairy Rd, Ruckersville, VA 22968. All rights reserved.

structure. If floormats are standard or offered as an option through the manufacturer or dealership, a floormat is installed only in the driver footwell.

The daytime running lights (if equipped) are disabled by means of removing fuses or relays to these devices to reduce the electrical power required for the test.

A plastic block containing an array of high-intensity LEDs is attached to the hood of the vehicle with sheet metal screws. An additional LED is placed inside the vehicle in view of the onboard high-speed cameras. The LEDs are illuminated when the vehicle first contacts the barrier. Two pressure-sensitive tape switches are applied to the vehicle such that they make first contact with the barrier during the crash. Pressure applied to these switches completes an electrical circuit that illuminates the LEDs and signals the start of the crash (time-zero) for the data acquisition system.

The exterior surfaces of the vehicle are trimmed with inch tape and photographic targets to facilitate analysis of the high-speed camera footage (Figure 4). The scheme consists of five 61-cm length gages in four separate reference planes: the surface of the roof, the surface of the hood, the surface of the front left and right side doors, and a vertical plane passing through the centerline of the driver seat. The location of the vehicle accelerometers and the location of the vehicle precrash center of gravity are marked with photographic targets applied to the appropriate top surfaces of the vehicle. The locations of the front and rear door latch locations (left and right sides of vehicle) and driver shoulder belt upper anchorage are marked on the side surfaces with photographic targets. Targets are applied along the A-pillar, beginning at the base, every 10 cm in the longitudinal direction. To determine the side head protection airbag forward coverage, a target is placed on the driver door to designate the forwardmost position of the

Figure 4
Exterior Surface Marking

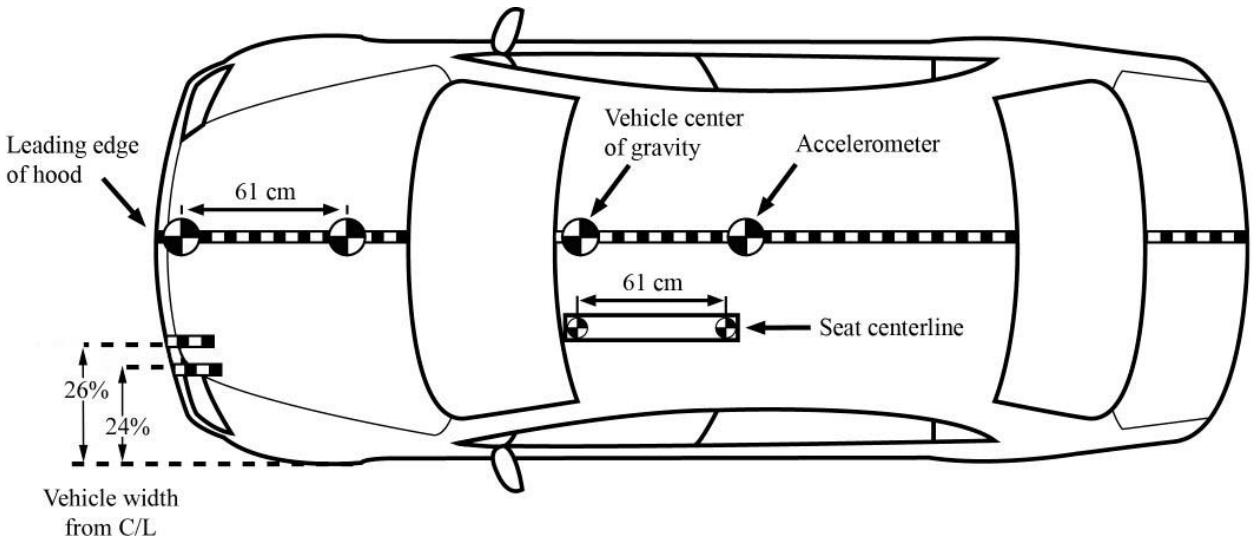

© 2017 Insurance Institute for Highway Safety
988 Dairy Rd, Ruckersville, VA 22968. All rights reserved.

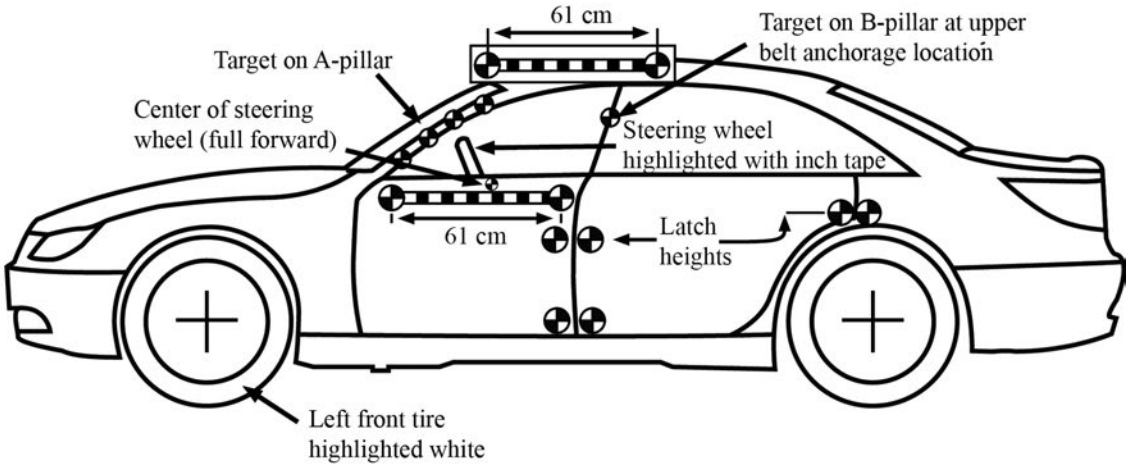

steering wheel center in the longitudinal direction. To determine vehicle alignment with the barrier at impact, inch tape is placed at 24 and 26 percent of vehicle width. The steering wheel and the leading edge of the dash are highlighted with inch tape, and the left front tire is highlighted with white paint.

The head restraints are removed from the front seats, and the front right passenger frontal and side curtain airbags are deactivated (if necessary) to prevent these components from obstructing camera views. The airbags are deactivated by inserting an appropriately sized resistor in place of the connection to each airbag.

The driver seat manually adjustable inboard armrest (if equipped) is adjusted to its lowered position. For vehicles equipped with multiple locking armrest positions, the position that results in the top surface of the armrest being closest to parallel with the ground is chosen.

All doors are fully latched but not locked. However, if the vehicle is equipped with automatically locking doors that cannot be set to remain unlocked when the vehicle is in forward motion, the door locks are kept in their automatic state. All side windows are lowered to their lowest position, the ignition is turned to its on position, and the transmission is shifted into its neutral position prior to the test.

Crash Dummy Preparation and Setup

A 50th percentile male Hybrid III dummy (49 *CFR* 572 (E) with instrumented lower legs is positioned in the driver seat according to the *Guidelines for Using the UMTRI ATD Positioning Procedure for ATD and Seat Positioning (Version V)* (IIHS, 2004).

The dummy is equipped with feet and ankles described in the final rule incorporating Hybrid III dummy modifications (Docket 74-14 Notice 104; *FR* vol. 61, no. 249, pp. 67953-67962). The feet have been further modified to include two accelerometers, and the ankles have been modified to prevent metal-to-metal contact that results from bottoming of the ankle bumper (Humanetics Innovative Solutions, Inc., part numbers 78051-653-H and 78051-654-H).

The dummy's knees are equipped with ball-bearing sliders, and the neck is fitted with a neck shield. In addition, the dummy's thoracic spine has been modified to accommodate an onboard data acquisition system (DTS TDAS G5). The mass and moments of inertia of the modified thoracic spine are similar to those of the standard dummy.

© 2017 Insurance Institute for Highway Safety
988 Dairy Rd, Ruckersville, VA 22968. All rights reserved.

The dummies used in these tests are calibrated according to 49 *CFR* 572 (E) after being subjected to no more than five crash tests. Additionally, individual parts are recalibrated if levels recorded during a test exceed the higher of published injury reference values or the values achieved in dummy certification tests, or if postcrash inspection reveals damage. All visible damage is repaired before the dummy is used again.

The dummy and vehicle are kept in a temperature-controlled area where the temperature is maintained at 20.0-22.2 degrees Celsius and the relative humidity at 10-70 percent for at least 16 hours prior to the test. The driver seat belt is fastened around the dummy. For vehicles with continuous-loop lap/shoulder seat belts, the slack from the lap portion of the driver seat belt is removed and the webbing is pulled fully out of the retractor and allowed to retract under tension a total of 4 times. The lap belt slack is then removed again with a small pulling force. For vehicles with separate lap and shoulder seat belt retractors, the webbing from each is pulled fully out of the retractor and allowed to retract under tension a total of 4 times. The dummy's head, knees, shins, and heel of left hand are colored with grease paint to facilitate postcrash identification of impacts with the vehicle interior. Photographic targets are placed on both sides of the head to mark the location of its center of gravity.

Photography

Still Photography

The precrash and postcrash conditions of each test vehicle are photographed. Two precrash and two postcrash views show the side and left front quarter of the test vehicle.

Additional photographs document the precrash position of the driver dummy, including close-up views of the dummy's legs.

Three standard views of the vehicle in its postcrash position in front of the barrier are recorded. Additional photographs document the postcrash position of the driver dummy.

High-Speed Motion Picture Photography

Motion picture photography is made of the test with nine high-speed digital imagers along with real-time cameras. All high-speed imagers record at 500 frames per second. The coordinates and lens focal length of each offboard camera are listed in Table 1. The camera view and focal length of the onboard high-speed cameras are listed in Table 2. The positions of the offboard and onboard cameras are illustrated in Figures 5A and 5B, respectively

Table 1
Crash Hall High-Speed Phantom Cameras – Coordinates, Focal Points, and Settings

	A	B	C	D	E	F
Camera Position	**Overhead**	**Rear Oblique**	**Left Side**	**Front**	**Front Oblique**	**Right Side**
Coordinate X (cm)	0	-712	-127	232	892	-102
Coordinate Y (cm)	0	1030	1410	-58	-318	-1543
Coordinate Z (cm)	910	125	150	227	222	135
Focal length (mm)	35	85	50	18	70	95

© 2017 Insurance Institute for Highway Safety
988 Dairy Rd, Ruckersville, VA 22968. All rights reserved.

Table 2
Onboard High-Speed IDT Digital Cameras – Focal Points and Settings

	H	I	J	K
Camera Position	**Passenger Door (Front)**	**Inside Roof, Passenger Side**	**Inside Roof, Driver Side**	**Passenger Door (Rear)**
Focal point	Side view of driver	Over the shoulder of driver	Rear view of driver	View of string potentiometers and instrumentation
Focal length (mm)	10	16	16	10

© 2017 Insurance Institute for Highway Safety
988 Dairy Rd, Ruckersville, VA 22968. All rights reserved.

Figure 5A
High-Speed Camera Positions

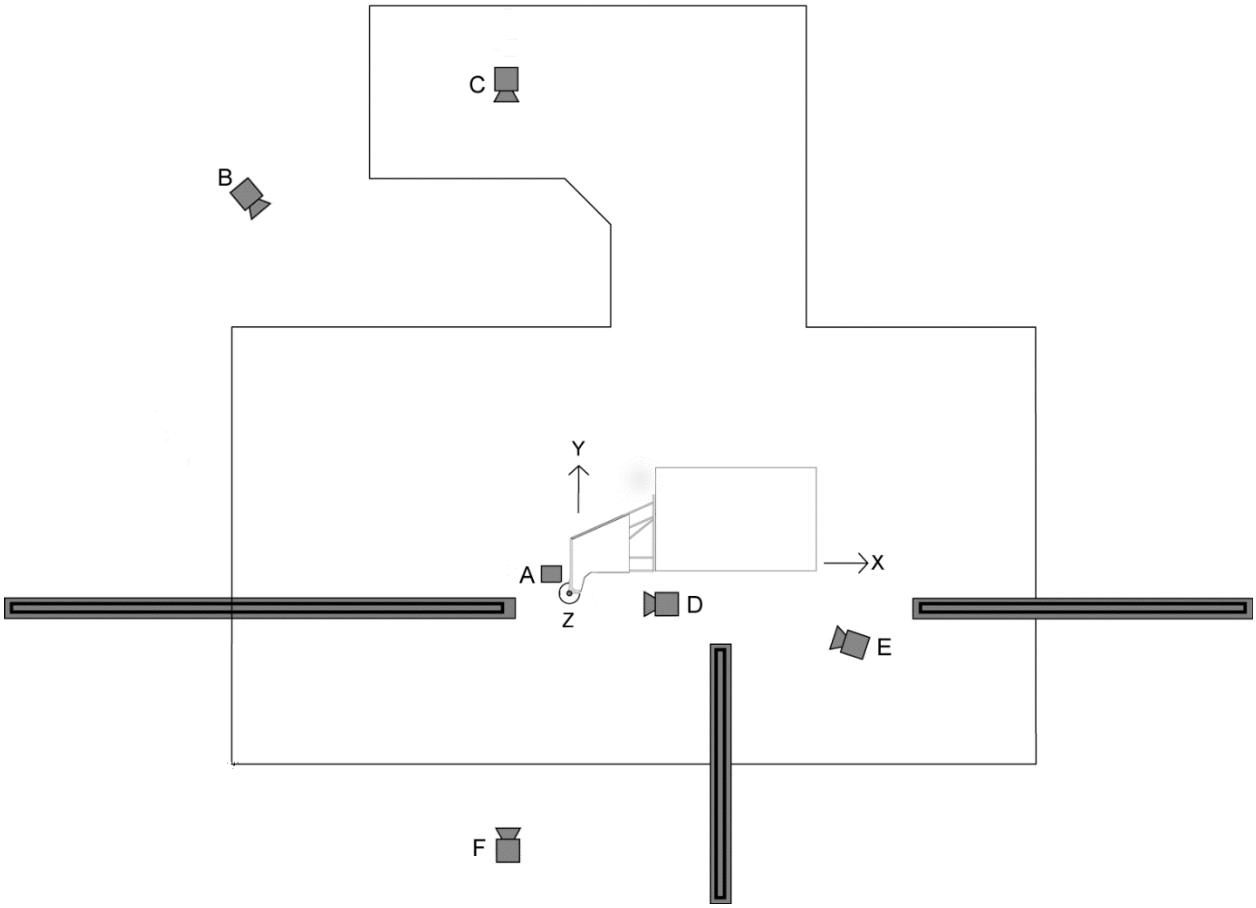

Figure 5B
Onboard High-Speed IDT Camera Positions

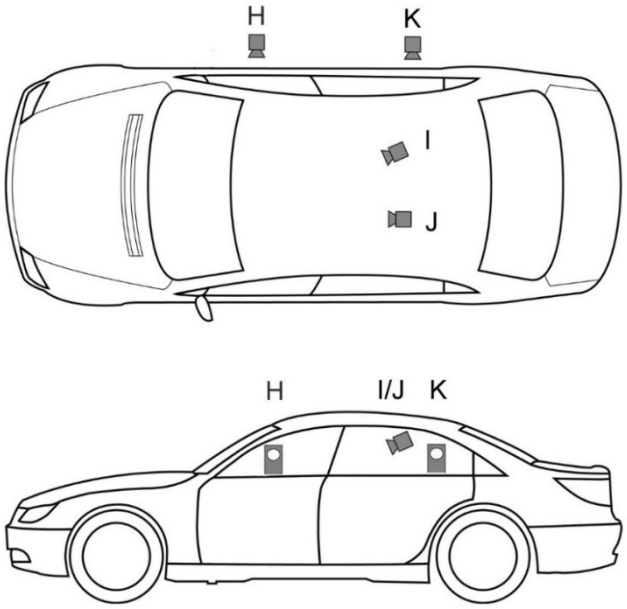

© 2017 Insurance Institute for Highway Safety
988 Dairy Rd, Ruckersville, VA 22968. All rights reserved.

MEASUREMENTS AND OBSERVATIONS

Test Weight

The test weight of the vehicle is measured at each of the four wheels. The vehicle is weighed with all test equipment installed, including the driver dummy. The front and rear axle weights are used to determine the longitudinal position of the center of gravity for the test vehicle.

Impact Speed

The impact speed is determined by averaging two speed-trap measurements. Both speed traps measure the average velocity of the vehicle at 1-1.5 m before impact with the barrier. The propulsion system also has an optical speed measuring device that serves as a backup to the two speed traps. This device measures the speed of the hardware attaching the vehicle to the propulsion system immediately prior to the vehicle's release from the propulsion system before impact. The speed is clocked over a 1 m length of vehicle travel ending 0.5 m before the vehicle's release from the propulsion system.

Overlap

The test overlap is verified from the video taken by the high-speed digital imager overhead view (position A in Figure 5A). At the time of impact, the outboard edge of a plastic target that has been attached to the inboard edge of the barrier should fall within the 24 and 26 percent vehicle width inch tape on the vehicle hood or front bumper (Figure 6). If the target falls outside of this area, additional analaysis will be conducted to determine actual offset.

Figure 6
Determining Vehicle Overlap – Target (left) and Video Screen Shot (right)

Vehicle Accelerations

The linear accelerations in three orthogonal directions (longitudinal, lateral, and vertical) of the vehicle occupant compartment are measured by accelerometer arrays (three Endevco 7264A-2000 or 7264B-2000 accelerometers) and recorded by the TDAS G5 system. A DTS SLICE MICRO DAS with a triaxial accelerometer array (Accel SLICE) also may be used to measure vehicle acceleration. Positive vehicle accelerations are forward along the longitudinal axis, rightward along the lateral axis, and downward along the vertical axis. The data are presented filtered according to the channel frequency class (CFC) 60 as defined in SAE (2014) Surface Vehicle Recommended Practice J211/1.

© 2017 Insurance Institute for Highway Safety
988 Dairy Rd, Ruckersville, VA 22968. All rights reserved.

Fuel System Integrity

Observations about fuel system integrity are recorded for each test. Any Stoddard fluid leaked from the fuel system within 1 minute after the impact is collected as the first sample. This typically is done by soaking up the fluid with an absorbent pad of known mass. The second sample of leaked Stoddard fluid is collected during the 5 minutes immediately following the collection of the first sample. This sample typically is collected in pans placed under the sources of identified leaks. The third sample is collected during the 25 minutes immediately following the collection of the second. The pans used to collect the second sample are replaced with clean empty pans. The volume of each sample is determined by dividing the weight of the sample by the density of Stoddard fluid (790 g/l). The elapsed time is determined using a stopwatch. The entire process is recorded with a video camera equipped with an internal timer, which displays the time in each frame.

High-Voltage System Integrity

Vehicles with a hybrid or full-electric drivetrain are monitored to ensure the high-voltage electrical system has not been compromised. Postcrash observations include a measure of electrolyte spillage (if any), battery retention, and electrical isolation of the high-voltage system as per FMVSS 305. Additionally, the battery temperature will be monitored to detect a rapid increase in temperature that may indicate a thermal runaway condition.

Intrusion Measurements

A total of 18 locations are marked on the driver side interior and exterior of the vehicle, and their longitudinal, lateral, and vertical coordinates are recorded using a coordinate measurement machine (CMM). These same marks are measured after the crash using the same reference coordinate system.

Coordinate System Definition

A right-handed, three-axis orthogonal coordinate system is used for these measures: longitudinal (front to rear is positive), lateral (left to right is positive), and vertical (bottom to top is positive). The precrash coordinate system is defined with the vehicle unloaded (no occupants) on a level floor. The plane of the ground is used to define the X-Y plane, and the two end points on the centerline of the roof are used to define the X axis.

Coordinates of at least two marked reference points inside the vehicle compartment are recorded precrash to establish the postcrash coordinate system. For most vehicles, the reference points will be taken on the vehicle structure on the nonstruck (right side) rear door frame.

Measurement Point Locations

The following are the locations for measuring vehicle intrusion (Figure 7):

Steering column (one point): The marked reference is the geometric center of the steering wheel, typically on the airbag door. After the crash, this point is measured by folding the airbag doors back into their undeployed position. In most cases, this measurement is probably less than the maximum intrusion into the compartment. However, if the steering column has loosened (from release of adjustment lever), or completely separates from the instrument panel (due to shear module separation, for example) during the crash, the steering column postcrash measurement is taken by placing and holding the wheel and column in its approximate maximum dynamic position, upward and forward. High-speed video may be used to determine approximate steering column position; however, the video footage may not always show clearly where the column was during the crash, and in such cases other clues would be needed to

© 2017 Insurance Institute for Highway Safety
988 Dairy Rd, Ruckersville, VA 22968. All rights reserved.

reposition the column for measurement. In rare instances, it may not be possible to obtain any meaningful postcrash measurement.

Figure 7
Locations for Measuring Vehicle Intrusion

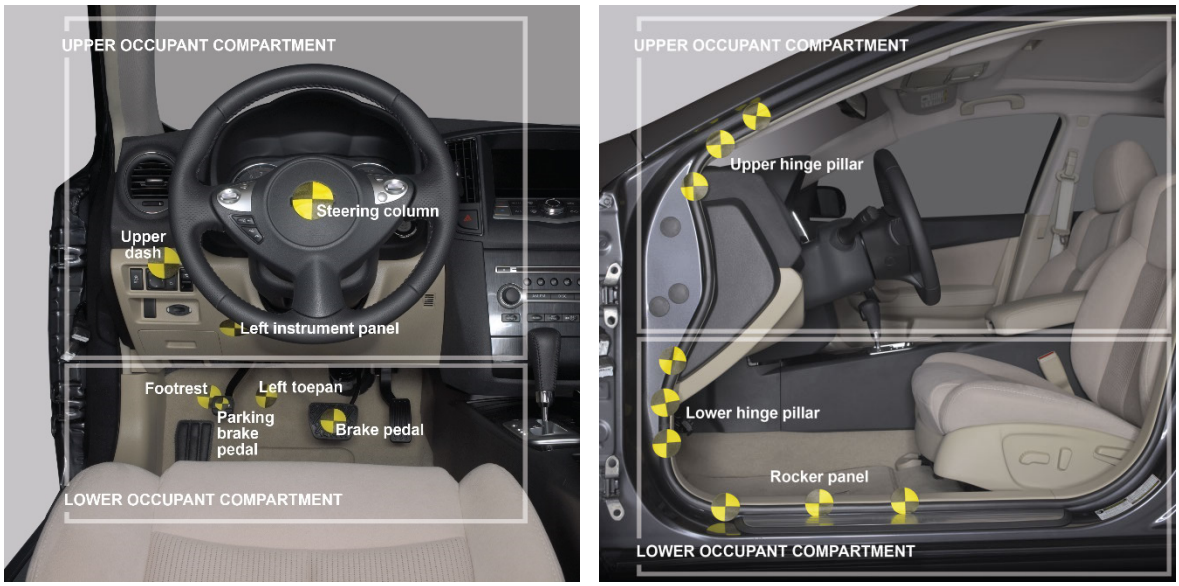

Left instrument panel (one point): The left instrument panel lateral coordinate is defined by subtracting 15 cm from the steering column reference lateral coordinate. The vertical coordinate is defined as 45 cm above the height of the floor (without floormats). If the panel loosens or breaks away in the crash, the postcrash measurements are taken by pressing and holding the panel against the underlying structure.

Brake pedal (one point): The marked reference is the geometric center of the brake pedal pad (top surface). If the brake pedal is constructed so that it dangles loosely after the crash, the brake pedal is pushed straight forward against the toepan/floorpan and held there to take the postcrash measurement. If the pedal drops away entirely, no postcrash measurement is taken.

Parking brake pedal (one point): The marked reference is the geometric center of the parking brake pedal (top surface). If the parking brake is a hand brake or button located on the instrument panel or center console, no measurement is taken.

Footrest (one point): The vertical coordinate for the footrest measurement location is the vertical coordinate of the brake pedal reference. The lateral coordinate of the footrest is obtained by subtracting 25 cm from the brake pedal reference lateral coordinate. The same procedure described above for cutting the carpet is used to mark and measure the underlying structure. In cases where there is a specific footrest construct at the footrest measurement location, the construct is removed and the underlying structure is marked and measured. The construct is reinstalled prior to the crash.

Seat bolts (two points): The marked reference is the two rear bolts that anchor the driver seat to the floor of the vehicle.

Left toepan (one point): The vertical coordinate for the left toepan measurement location is the vertical coordinate of the brake pedal reference. The lateral coordinate of the left toepan locations is obtained by subtracting 15 cm from the brake pedal reference lateral coordinate. The longitudinal coordinate is measured, and a mark is temporarily placed at the locations on the toepan. A utility knife is used to cut a

© 2017 Insurance Institute for Highway Safety
988 Dairy Rd, Ruckersville, VA 22968. All rights reserved.

small "v" in the carpet and underlying padding on the toepan. The point of the "v" is peeled back, and the exposed floor is marked and measured. The carpet and padding are then refitted prior to the crash.

Upper dash (one point): The upper dash point is obtained by subtracting 25 cm from the lateral coordinate of the steering column reference lateral coordinate. This defines a line of points on the edge of the upper dash. The upper dash point is located on the rearward-most (toward the rear of the vehicle) point on this line. This point must be located at least 30 cm above the brake pedal reference point to ensure a vertical location high enough to represent a location that could be contacted by the driver's upper body or head. If the rearward-most point is less than 30 cm above the brake pedal reference point, the upper dash point is located at this 30 cm reference location.

There may be instances when the upper dash point is located on a "soft component" such as an air vent or control knob (Figure 8). To measure a more robust structure, the upper dash point is replaced with two additional points, and the weighted average of their coordinates is used to represent the deformation of a point at the original location (Equation 1). Each new point is determined by moving inboard/outboard to a location that is just off of the soft component.

Figure 8
Equation for Measuring Soft Component Upper Dash Point

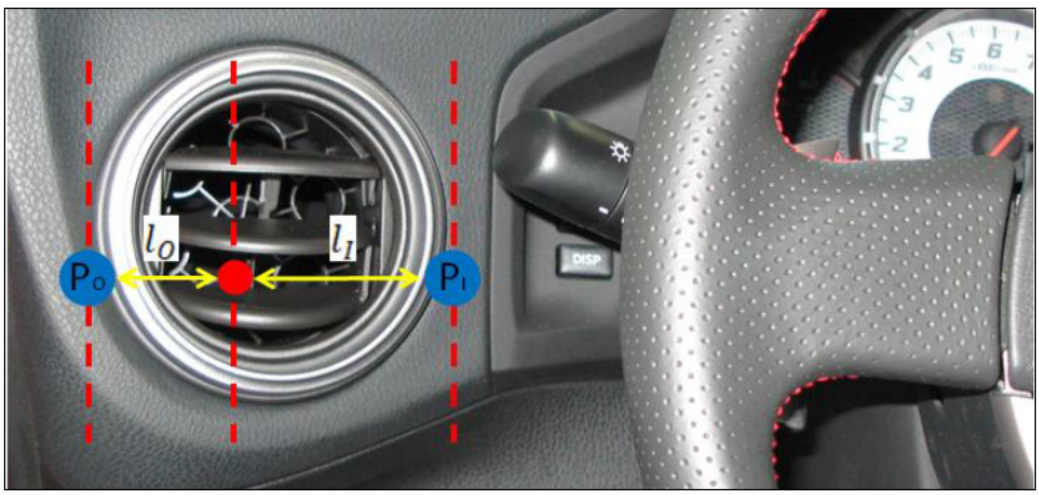

$$\text{Simulated upper dash point location} = \frac{l_I}{l_O+l_I} \times \left[x_{P_O}, y_{P_O}, z_{P_O}\right] + \frac{l_O}{l_O+l_I} \times \left[x_{P_I}, y_{P_I}, z_{P_I}\right] \quad (1)$$

Lower (three points) and upper (three points) hinge pillar: The hinge pillar is measured at the innermost surface of the door opening, typically on the pinch weld. The vertical coordinates for the three lower points are obtained by adding 0 cm (lower hinge pillar point 1), 7.5 cm (lower hinge pillar point 2), and 15 cm (lower hinge pillar point 3) to the brake pedal reference point. The upper points are obtained by adding 45 cm (upper hinge pillar point 1), 52.5 cm (upper hinge pillar point 2), and 60 cm (upper hinge pillar point 3).

Rocker panel (three points): The rocker panel also is measured at the innermost surface of the door opening, typically on the pinch weld. The longitudinal coordinates are obtained by adding 20 cm (rocker panel point 1), 35 cm (rocker panel point 2), and 50 cm (rocker panel point 3) to the brake pedal reference point

If the 20 cm point is forward of the actual door frame, this point is located 5 cm rearward of the lower hinge pillar point.

© 2017 Insurance Institute for Highway Safety
988 Dairy Rd, Ruckersville, VA 22968. All rights reserved.

Dummy Kinematics and Contact Locations

Dummy kinematics are studied by reviewing the high-speed video. Contact of the dummy's head or knees with the vehicle interior is recorded on the basis of postcrash grease paint deposits.

The dummy is inspected in its undisturbed postcrash position. Any damage to the dummy or unusual dummy resting position information is noted. The locations of paint transferred from the dummy to the vehicle interior are noted.

The high-speed video is used to estimate the time after the start of the crash that various events occur. For each event, the camera that provides the clearest view of the event is used. The start of the crash is considered to be the first frame from each camera in which the LEDs mounted on the hood and/or interior seat back of the vehicle are illuminated. The time recorded for each event is based on the number of frames elapsed from the start of the crash and the nominal operating speed of the camera. For the cameras operating at 500 frames per second, the estimate of the crash start time can be up to 2 ms late, and the event's time, as determined from the video, can be early or late by 2 ms. The time of the driver airbag deployment, full inflation, and first dummy contact are recorded as well as any other notable events.

Dummy Responses

Each Hybrid III dummy is equipped with instrumentation for measuring the following:

Head

Triaxial accelerations (three Endevco 7264A-2000 (or 7264B-2000) accelerometers)
Triaxial angular rate sensors (three DTS ARS Pro – 18k)

Neck

A-P shear force
L-M shear force
Axial force
A-P moments (Humanetics Innovative Solutions, Inc. Model 2564 or 1716A upper neck load cell)

Chest

Triaxial accelerations (three Endevco 7264A-2000 (or 7264B-2000) accelerometers)
Rib compression

Lower Extremities

Femur axial forces (Humanetics Innovative Solutions, Inc. Model 2121A load cell)
Tibia-femur displacements
Upper tibia A-P moments
Upper tibia L-M moments (Humanetics Innovative Solutions, Inc. Model 1583 load cell)
Lower tibia A-P moments
Lower tibia L-M moments
Lower tibia axial forces (custom Humanetics Innovative Solutions, Inc. Model 3093 load cell)
Biaxial foot accelerations (A-P and I-S) (two Endevco 7264A-2000 (or 7264B-2000) accelerometers)

All instruments are regularly calibrated to a known standard. Accelerometers, load cells, and angular rate sensors are calibrated every 12 months. All measurements recorded from these instruments comply with the recommendations of SAE (2007) Surface Vehicle Information Report J1733.

© 2017 Insurance Institute for Highway Safety
988 Dairy Rd, Ruckersville, VA 22968. All rights reserved.

The DTS TDAS G5 data acquisition system is installed in the thorax of the Hybrid III dummy and used for dummy and vehicle data acquisition. A TDAS G5 iPort or DTS SLICE MICRO may be used for additional dummy or vehicle data acquisition. During the crash, all measurements are recorded in the system's random access memory with 16-bit resolution at a sample rate of 10 kHz. Signals in all channels convert simultaneously, so the time reference for different channels is not skewed. To ensure digital fidelity, all signals are filtered by an analog low-pass prefilter with a 3 kHz cutoff frequency.

After the data have been downloaded, any initial offset from zero is removed from each channel by computing the mean value for 100 data points preceding the crash event (from 50 to 40 ms before impact) for each channel and subtracting each mean from the respective data channel. The data are digitally filtered using the frequency response classes recommended in SAE (2014) Surface Vehicle Recommended Practice J211/1. Foot accelerations are filtered to SAE CFC 180. All filtering and subsequent calculations are executed using DIAdem (National Instruments Corporation).

In addition to summary metrics for each of the recorded data channels, the following calculations are made: vector resultant of the head acceleration, 3 ms clip of the vector resultant head acceleration, head injury criterion (HIC-36 and HIC-15), neck N_{ij} (calculated using formulas presented in 65 FR 30680), vector resultant of the spine accelerations, 3 ms clip of the vector resultant thoracic spine acceleration, viscous criterion, sternum deflection rate, vector resultant of the tibia bending moments (using the adjusted tibia A-P moments), tibia index (using the adjusted tibia A-P moments), and vector resultant of the foot accelerations. All calculations comply with the recommendations of SAE (2015) Surface Vehicle Recommended Practice J1727. The sternum deflection rate is calculated from the sternum deflection filtered to CFC 60.

Occupant Excursion

Occupant excursion is calculated by combining measures of the dummy's movement away from the seat back with measures of seat back deflection. Peak dummy movement away from the seat back is measured by pull-strings or fiberglass measuring tapes tied to a bracket at the top of the dummy's torso and threaded through the seat back material. Dynamic seat back deflection is recorded using two cable potentiometers (Celesco MT2A) mounted to a fixed point behind the driver seat. The seat back deflection data are filtered to SAE CFC 60. A detailed procedure is provided in Appendix A.

Side Head Protection Airbag Forward Coverage

High-speed video camera views are used to determine if the side head protection airbag has air chambers that extend forward to at least the orthogonal vertical plane intersecting the center of the steering wheel in its forwardmost telescoping position (if adjustable). The measurement is made in a zone from 12-22 cm above the center of the steering wheel. A detailed procedure is provided in Appendix B.

© 2017 Insurance Institute for Highway Safety
988 Dairy Rd, Ruckersville, VA 22968. All rights reserved.

REFERENCES

Insurance Institute for Highway Safety. 2004. Guidelines for using the UMTRI ATD positioning procedure for ATD and seat positioning (version V). Arlington, VA.

Insurance Institute for Highway Safety. 2014. Moderate overlap frontal crashworthiness evaluation; Guidelines for rating injury measures. Arlington, VA.

National Instruments Corporation. DIAdem. Austin, TX.

Society of Automotive Engineers. 2000. *2000 SAE Handbook; Vol. 3: On-Highway Vehicles and Off-Highway Machinery*. Warrendale, PA.

Society of Automotive Engineers. 2007. Surface Vehicle Information Report J1733; Sign convention for vehicle crash testing. Warrendale, PA.

Society of Automotive Engineers. 2009. Surface Vehicle Recommended Practice J1100; Motor vehicle dimensions. Warrendale, PA.

Society of Automotive Engineers. 2014. Surface Vehicle Recommended Practice J211/1; Instrumentation for impact test, Part 1: Electronic instrumentation. Warrendale, PA.

Society of Automotive Engineers. 2015. Surface Vehicle Standard J826; Devices for use in defining and measuring vehicle seating accommodation. Warrendale, PA

Society of Automotive Engineers. 2015. Surface Vehicle Recommended Practice J1727; Calculation guidelines for impact testing. Warrendale, PA.

Wellbourne, E.R. and Shewchenko, N. 1998. Improved measures of foot ankle injury risk from the Hybrid III tibia. *Proceedings of the 16th International Technical Conference on the Enhanced Safety of Vehicles*, 1618-26. Washington, DC: National Highway Traffic Safety Administration.

Zuby, D.S.; Nolan, J.M.; and Sherwood, C.P. 2001. Effect of Hybrid III leg geometry on upper tibia bending moments. SAE Technical Paper Series 2001-01-0169. *Biomechanics Research and Development* (SP-1577) Warrendale, PA: Society of Automotive Engineers.

© 2017 Insurance Institute for Highway Safety
988 Dairy Rd, Ruckersville, VA 22968. All rights reserved.

APPENDIX A

Occupant Excursion

The following procedure is used to measure the dummy's forward excursion during the test.

1. With the seat in its test position, calculate the seat back "hinge" point location. This is done using the locations of two points on the seat back (recorded with a CMM) with the seat upright and reclined (Figure A-1).
2. Two cable potentiometers are mounted to rigid points behind the driver seat. The cable ends are attached to the rear of the driver seat back near the top, with one near the centerline of the seat and the other near the inboard edge. Access holes may be cut through the seat back fabric but the seat frame is not modified in any way. Plastic cable ties are used to attach the potentiometers to the seat back frame.

3. The dummy's movement away from the seat is measured using two pull strings or fiberglass measuring tapes (McMaster-Carr part# 3519A32, cut into 4mm wide strips).

    3.1. The string or tapes are tied to an aluminum bracket secured to the top of the dummy's neck adjusting bracket flange. The right (inboard) rear bolt that holds the neck adjusting bracket to the top of the thoracic spine assembly is used as the attachment point for the bracket. To provide clearance above the chest jacket, the bracket extends upward 10 cm above the neck adjusting bracket flange (Figure A-2).

    3.2. The other ends of the strings or tapes are threaded through holes cut in the seat back material. One hole is located directly rearward from the dummy attachment bracket and the other is angled toward the inboard edge of the seat. The vertical locations of the holes should be close to each other. The strings or tapes are pulled tight between the dummy and seat, with the loose ends allowed to hang freely (Figure A-3 and A-4).

    3.3. If pull strings are used, they are marked where they first meet the seat back fabric. If fiberglass measuring tapes are used, the reading is recorded at the point where they meet the seat back. The CMM is used to record the locations of both ends of both potentiometers, the locations on the seat back where the string/tapes pass through, and the location of the dummy attachment bracket.

4. After the test, the amount of string/tape pulled through the seat back is recorded.

5. Using footage from the onboard digital imagers, the time when the strings/tapes are at the maximum pullout is determined. At this time, the seat back deflection angles are found at the locations where the potentiometers attach to the rear of the seat back. These angles are extrapolated to the locations of the pull strings/tapes on the front of the seat back.

6. The overall resultant excursion is calculated by finding the difference between the position of the dummy attachment bracket pre-test and the intersection point of the circles described by the two pull strings/tapes, after adjusting the seat points for the seat back deflection at the time determined in step 5 (Figure A-5). The resultant excursion is resolved into its longitudinal and lateral components. The file *small overlap excursion template.xlsx* is used to perform all calculations and determine the overall dummy excursion value.

© 2017 Insurance Institute for Highway Safety
988 Dairy Rd, Ruckersville, VA 22968. All rights reserved.

7. In calculating the overall excursion, the following assumptions are made:

   7.1. The seat back rotates about the "hinge" point and the seat pan does not move.

   7.2. The lateral component of the seat back movement/deflection is negligible (though the longitudinal component of any twisting about the vertical axis of the seat is captured).

   7.3. The vertical component of the dummy's movement from the seat is negligible.

Figure A-1
Finding Seat Back Hinge Point

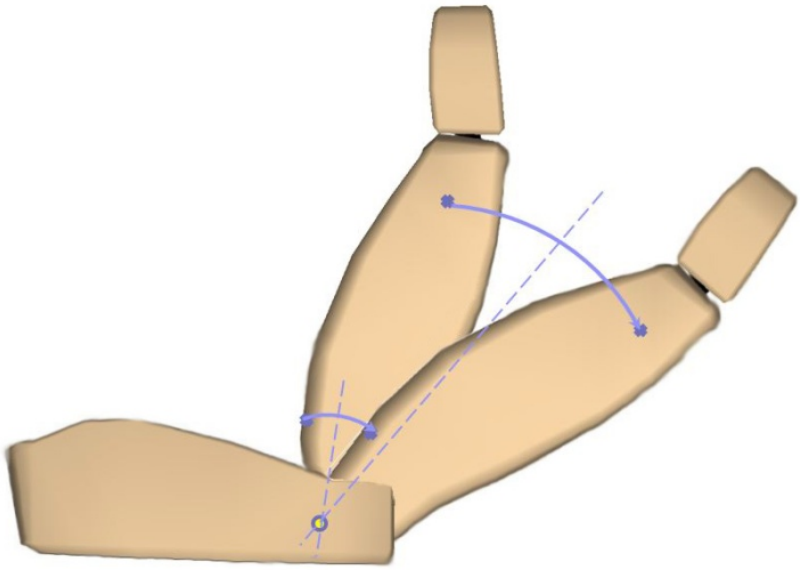

Figure A-2
Dummy Neck Bracket

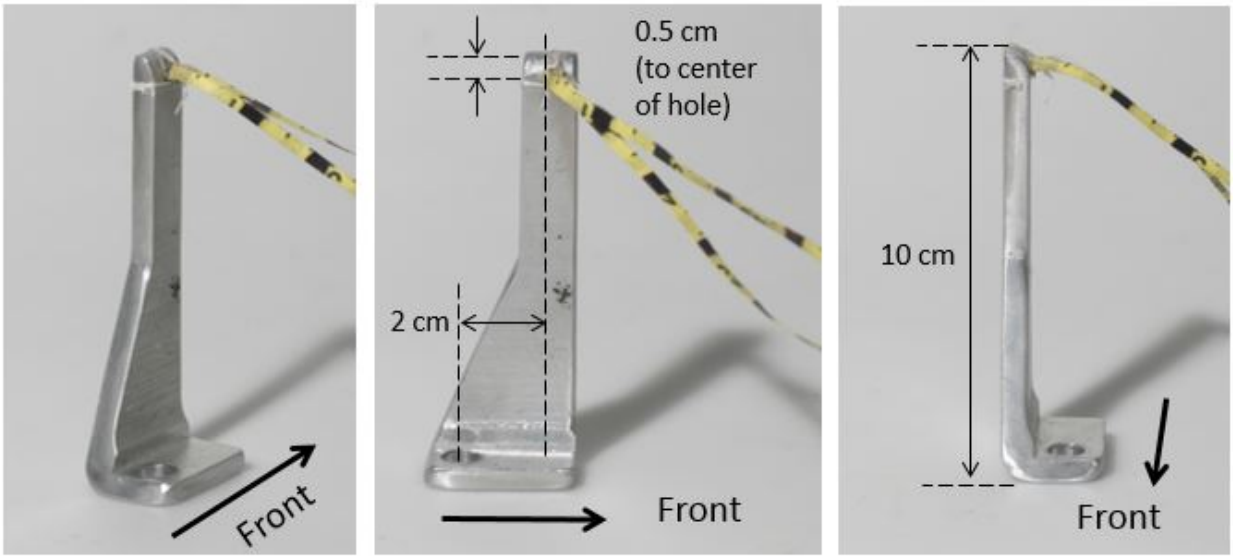

© 2017 Insurance Institute for Highway Safety
988 Dairy Rd, Ruckersville, VA 22968. All rights reserved.

Figure A-3
Fiberglass Tapes Between Dummy and Seat Back

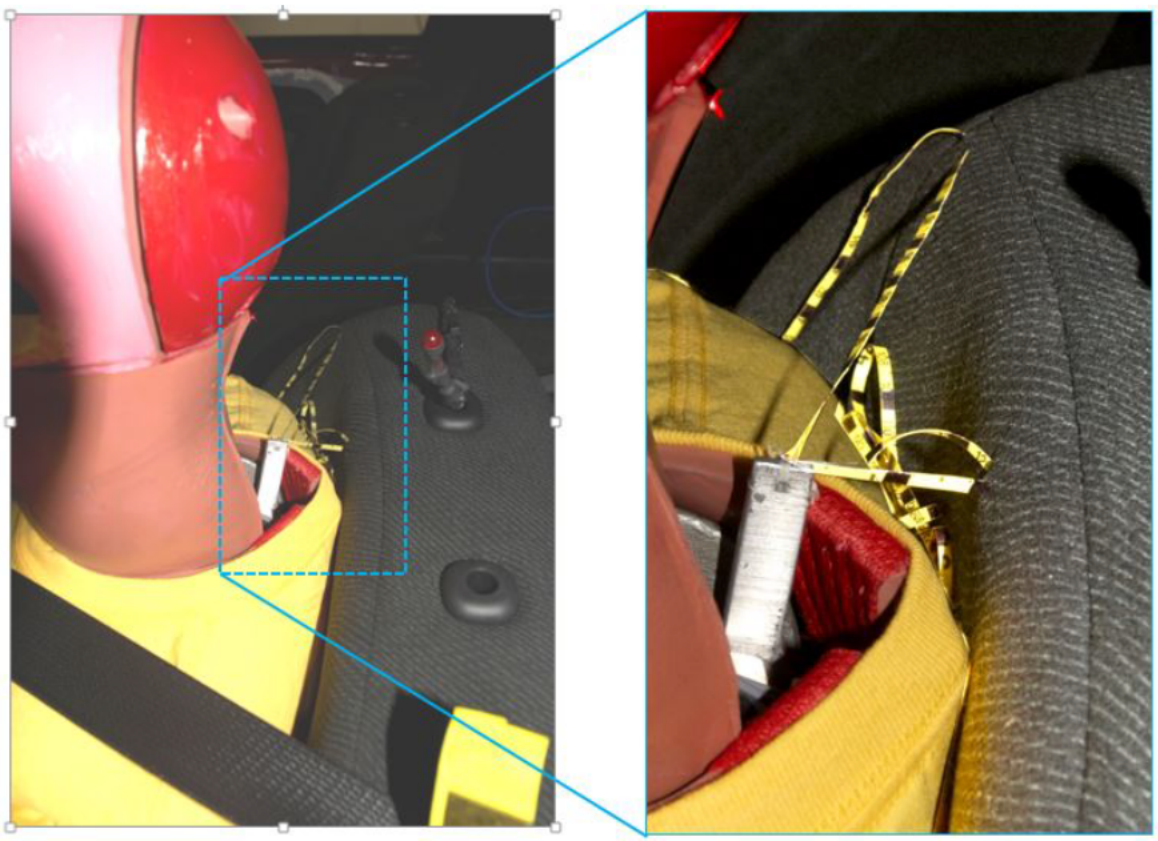

Figure A-4
Fiberglass Tape Seat Back Detail

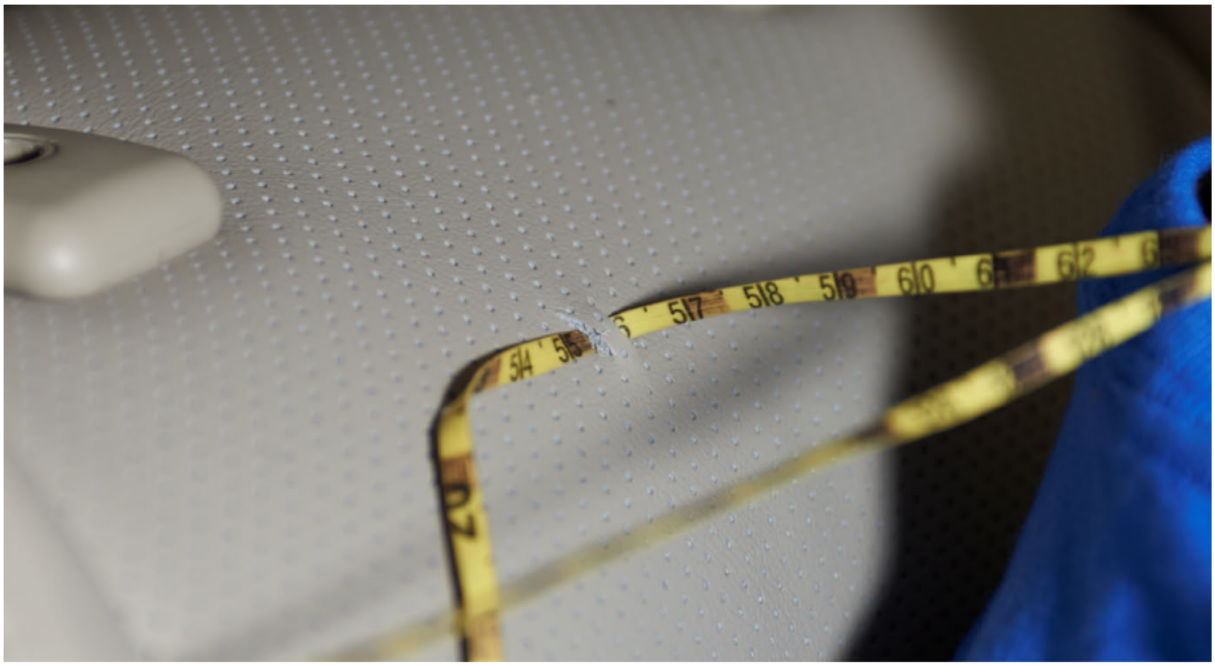

© 2017 Insurance Institute for Highway Safety
988 Dairy Rd, Ruckersville, VA 22968. All rights reserved.

Figure A-5
Calculating Overall Dummy Excursion

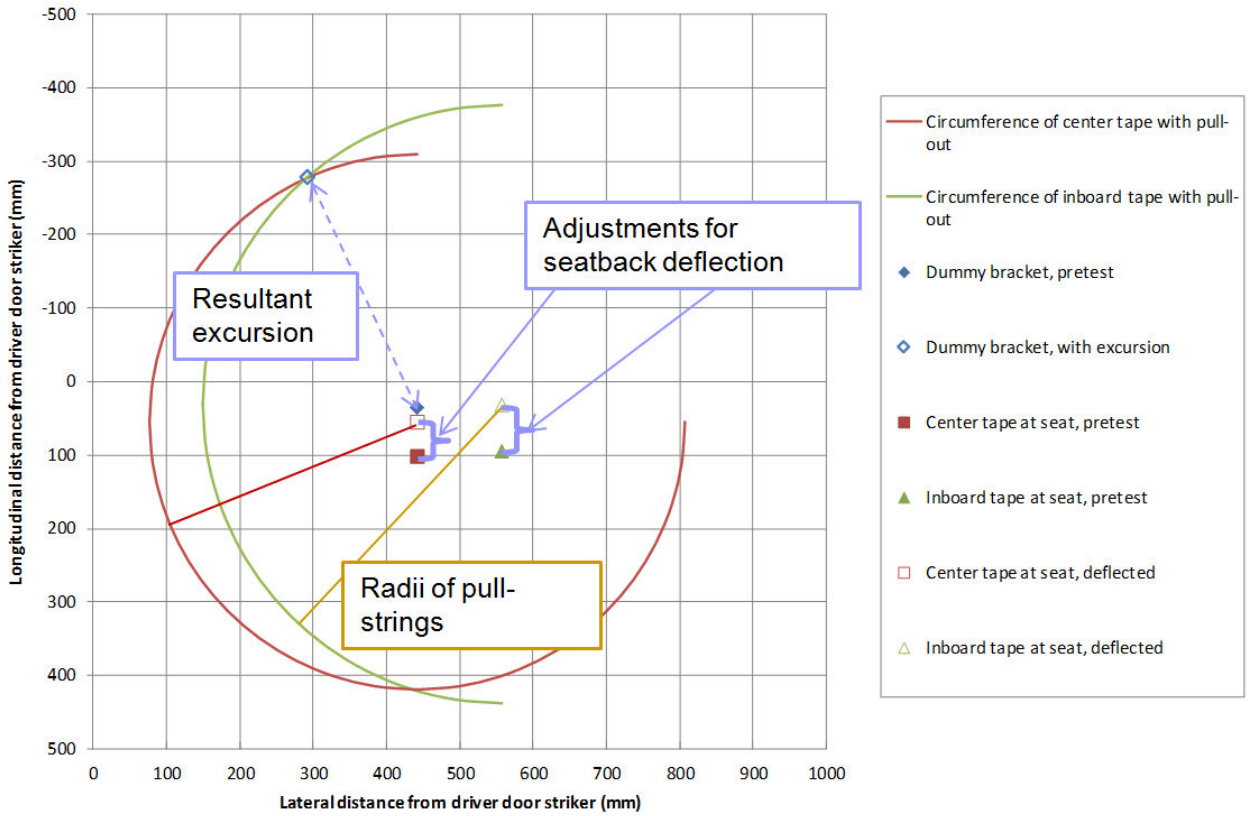

© 2017 Insurance Institute for Highway Safety
988 Dairy Rd, Ruckersville, VA 22968. All rights reserved.

APPENDIX B

Video Analysis Procedure for Measuring Side Head Protection Airbag Coverage

The following procedure should be used when measuring the forward coverage of the side curtain airbag during small overlap frontal crash tests. All video screen grabs should be saved from the same camera angle (driver side, wide view) at the same size. The forwardmost edge of the side head protection airbag is measured a) in the longitudinal direction at the center of the steering wheel in its forwardmost position, and b) in the vertical direction in a zone from 12-22 cm above the center of the steering wheel. For vehicles compliant with U.S. Federal Motor Vehicle Safety Standard (FMVSS) 226, the forwardmost coverage is measured to any components designed to mitigate ejection (i.e. airbag chamber or a fabric sail). For vehicles not compliant with FMVSS 226, the forwardmost coverage is measured to the airbag chamber only.

1. Select Video Frames

1.1. Save a screen grab from the driver side camera view (wide) when the steering wheel is approximately in the center of the frame.

1.2. Save a screen grab when the side curtain airbag becomes fully inflated, and then save the next 9 frames in sequence. Multiple frames are measured to ensure that measurements are taken during the frame when the airbag has the greatest forward coverage.

2. Measuring Steering Wheel Location on Door

2.1. Using photo editing software (e.g., Photoshop), open the first screen grab and rotate the image so that the horizontal targets on the top of the door are parallel with the x axis. Next, record the coordinates of the steering wheel center target on the driver door, using the rear door latch target as the origin (Figure B-1). The steering wheel door target is located on the outer edge of the door with the same X and Z coordinates as the steering wheel when positioned in the forwardmost (telescoping) position and at the mid-tilt angle. In this example, X = 462 pixels and Z = 13 pixels.

2.2. Record the distance, in pixels, between the horizontal targets on the top of the door. This measurement will be used later for scaling purposes (Figure B-2). In this example, the distance is 168 pixels. The actual distance between the targets is 61 cm (61 cm = 168 pixels).

3. Mark Steering Wheel Center on Door

3.1. Open the second screen grab (side curtain fully deployed) and apply the rotation found in step 2.1. Using the measuring tool in the photo editing software, locate the X and Z steering wheel center coordinates recorded in step 2.1, again using the rear door latch target as the origin. Mark this location with a small dot (Figure B-3).

3.2. Repeat step 3.1 for the remaining 9 screen grabs. If the airbag is clearly never near the reference point throughout the crash (forward or rearward), measurements are only taken for this first screen grab, for reference purposes.

4. Determining Forward Edge of Side Curtain Airbag

4.1. With a known number of pixels equaling 61 cm (distance between the horizontal door target), determine the number of pixels that equal 12 and 22 cm (33 and 61 pixels, respectively, in the example)

4.2. Open the second screen grab (side curtain fully deployed). Using the measuring tool in the photo editing software, and starting at the steering wheel 'dot' placed on the door in step 3.2, measure upward (vehicle Z axis) the number of pixels found to equal 12 and 22 cm. In this zone move

© 2017 Insurance Institute for Highway Safety
988 Dairy Rd, Ruckersville, VA 22968. All rights reserved.

either forward or backward (vehicle X axis) until the pointer contacts the leading edge of the inflated side curtain airbag chamber (Figure B-4). Record the number of pixels in the X axis (negative if rearward of the steering wheel, positive if forward), then convert to centimeters. In the example, the leading edge of the airbag chamber is 2 pixels forward of the steering wheel center; this equates to 0.7 cm.

4.3. Repeat step 4.2 for the remaining 9 screen grabs.

5. Final Measure

5.1. From the 10 photos analyzed, choose the largest value (most forward location). This number will be considered the leading edge of the side curtain airbag.

Figure B-1
Rear Door Latch Target to Steering Wheel Center Target Measure

Figure B-2
Distance Between Horizontal Door Targets (61 cm), All Vehicles

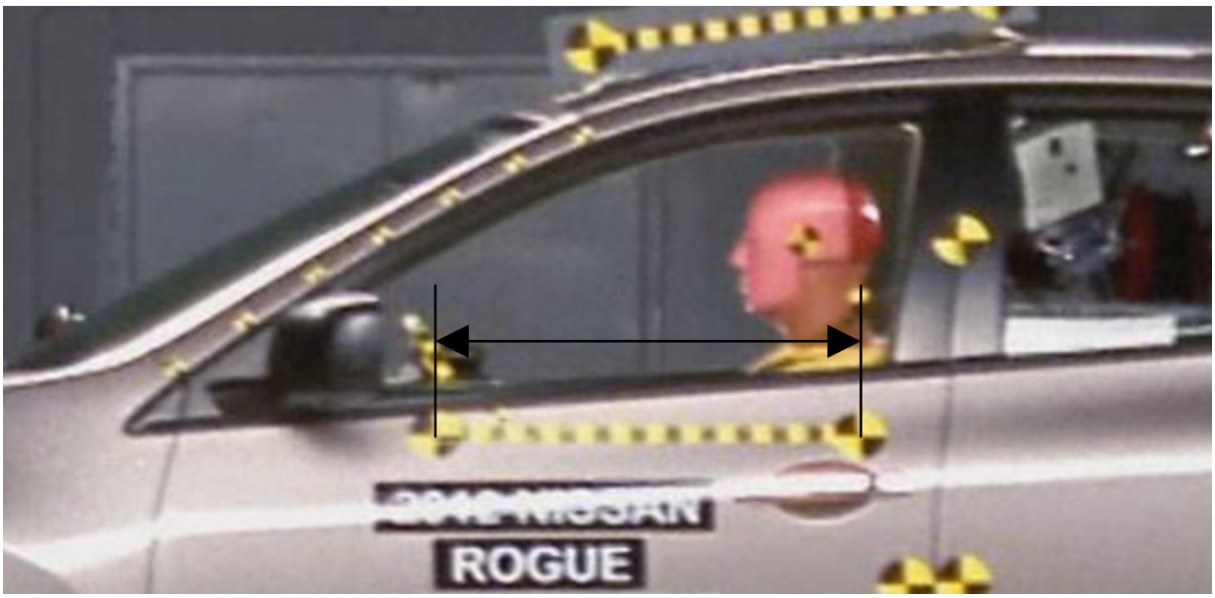

© 2017 Insurance Institute for Highway Safety
988 Dairy Rd, Ruckersville, VA 22968. All rights reserved.

Figure B-3
Marking Steering Wheel Center on Door, Mid-Crash

Figure B-4
Steering Wheel Center to Front of Side Curtain Airbag Chamber Measure

© 2017 Insurance Institute for Highway Safety
988 Dairy Rd, Ruckersville, VA 22968. All rights reserved.

APPENDIX C

Test Vehicle Selection

For each vehicle model used in the small overlap frontal test, the specific trim level selected is the one that most closely meets the IIHS definition of a "typical" vehicle of that class. This definition is made for each class by listing the presence or absence of certain features in a prioritized order.

When a given model is available in more than one body type (e.g., hatchback and sedan), the most popular version is tested. Counts of insurance policies from the Highway Loss Data Institute serve as the main source for determining the most popular body type. The small overlap frontal rating is applied only to the tested body type, except that sedans and hatchbacks as a general rule share the rating. Sedan/ hatchback ratings may be assigned to station wagons (and vice versa) if the manufacturer provides engineering drawings showing that front end structure and occupant restraint systems are comparable. Corporate twins of the same body type and with identical structure and restraints are assigned the same rating based on the one test.

Definitions of Typically Equipped Vehicles by Class

Microcars and Minicars
1. 2-wheel drive
2. Four-door
3. Automatic transmission or CVT
4. Base engine (4 cylinders or fewer)
5. Air conditioning

Small Cars
1. 2-wheel drive
2. Automatic transmission or CVT
3. Base 4-cylinder engine

Midsize Cars
1. 2-wheel drive
2. Automatic transmission or CVT
3. Base engine

Midsize Luxury Cars
1. 2-wheel drive
2. Automatic transmission or CVT
3. Base engine

Large Cars
1. 2-wheel drive
2. Automatic transmission or CVT
3. Base 6-cylinder engine

Large Luxury Cars
1. 2-wheel drive
2. Automatic transmission or CVT
3. Base 6-cylinder engine

Small SUVs
1. 4-wheel drive
2. Automatic transmission
3. Base 4-cylinder engine

Midsize SUVs
1. 4-wheel drive
2. Automatic transmission
3. Base engine

Midsize Luxury SUVs
1. 4-wheel drive
2. Automatic transmission
3. Base engine

Large SUVs
1. 4-wheel drive
2. Automatic transmission
3. Base engine (6 or 8 cylinder)

Minivans
1. 2-wheel drive
2. Automatic transmission or CVT
3. Base 6-cylinder engine

Small and Large Pickups
1. 2-wheel drive
2. Crew cab
3. Short bed (nominal 6 foot)
4. Automatic transmission
5. Base V6 (small trucks) or
   Base V8 (large trucks)

© 2017 Insurance Institute for Highway Safety
988 Dairy Rd, Ruckersville, VA 22968. All rights reserved.

APPENDIX D

Driver Dummy Clearance Measurement Definitions

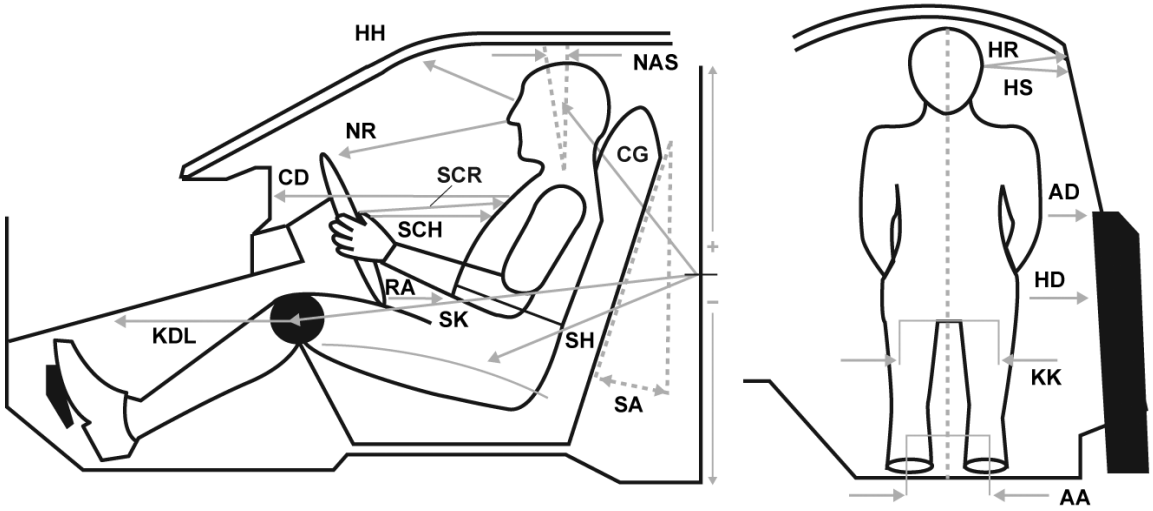

Location	Code	Definition of Measurement
Ankle to ankle	AA	Taken between the center points of both ankles, after the feet are placed per IIHS protocol.
Arm to door	AD	Horizontal measurement taken from the center point of the elbow to the first contact point of the door panel.
Chest to dash	CD	Taken from the clavicle adjustment holes in the chest to the point on the dash at level of chest landmark.
Head to A-pillar	HA	Horizontal measurement taken from the center of the head outboard center of gravity target to the A-pillar (not shown in figure).
Hub to chest, minimum	HCM	Minimum horizontal distance measured from the hub to the dummy chest (not shown in figure).
H-point to door	HD	Horizontal measurement taken from the H-point hole to the first contact point of the door panel.
Head to header	HH	Taken from the center point between the eyes to the header directly in front of dummy.
Head to roof	HR	Taken from the center of the outboard target to the roof edge (not the upper edge of the vehicle door), perpendicular to the longitudinal axis of the vehicle. If a tape measure is held from the target and extends below the roof, the point to measure is at the low edge of the roof line, which will make contact with the tape measure.
Head to side window	HS	Taken from the center of the outboard target to the side window, measured horizontally and perpendicular to the longitudinal axis of the vehicle. In cases where the window is not fully up, a flat bar should be placed across the window opening to simulate the position of the window.

continued

© 2017 Insurance Institute for Highway Safety
988 Dairy Rd, Ruckersville, VA 22968. All rights reserved.

Location	Code	Definition of Measurement
Knee to dash, left	KDL	Taken from the knee pivot point to the point on the dash that is directly level with the center of the knee.
Knee to dash, right	KDR	Taken from the knee pivot point to the point on the dash that is directly level with the center of the knee.
Knee to knee	KK	With the legs in a vertical plane after the feet are placed per IIHS protocol, the measurement is taken from the outside flange to the outside flange of the knees. The minimum distance is 270 mm (10.6 inches).
Neck angle, seated	NAS	Taken from the neck when the dummy is seated across two of the "vertebral disks" of the neck.
Nose to rim	NR	Taken from the tip of the nose to the steering wheel rim at the 12 o'clock position.
Pelvis angle	PA	Taken from the instrumented pelvis sensor (if available) or by placing an inclinometer on the H-point bar, which is used to align the H-point with previous measurements.
Rim to abdomen	RA	Taken from the point where the bottom of the chest jacket and the abdominal insert meet to the steering wheel rim at the 6 o'clock position.
Seat back angle	SA	Taken on the head restraint posts of the driver seat back unless otherwise directed by the manufacturer at which time it will be properly noted along with the measurement.
Steering wheel to chest, horizontal	SCH	Horizontal measurement taken from the center of the steering wheel to the dummy chest.
Steering wheel to chest, reference	SCR	Taken from the center of the steering wheel to the center of the clavicle adjustment holes (on the Hybrid III dummies).
Striker to head center of gravity, horizontal	CGH	Horizontal measurement taken from the head center of gravity to the driver door striker. Value is negative if the head center of gravity is forward of the striker.
Striker to head center of gravity, lateral	CGL	Lateral measurement taken from the head center of gravity to the driver door striker.
Striker to head center of gravity, vertical	CGV	Vertical measurement taken from the head center of gravity to the driver door striker. Value is negative if the head center of gravity is below the striker.
Striker to H-point, horizontal	SHH	Horizontal measurement taken from the H-point to the driver door striker. Value is negative if the H-point is forward of the striker.
Striker to H-point, vertical	SHV	Vertical measurement taken from the H-point to the driver door striker. Value is negative if the H-point is below the striker.
Striker to knee	SK	Taken from the center point of the knee to the striker.
Striker to knee angle	SKA	Taken from the center point of the knee to the striker.
Torso recline angle	TRA	Taken from the H-point to the head's center of gravity

© 2017 Insurance Institute for Highway Safety
988 Dairy Rd, Ruckersville, VA 22968. All rights reserved.

APPENDIX E

Passenger-Side Small Overlap Crash Tests

IIHS also conducts vehicle tests on the passenger side at a 25 percent overlap as part of the Crashworthiness Evaluation Program. Test vehicle setup and dummy preparation follow the driver side protocol, with deviations to account for the passenger side test configuration, including:

- The rigid barrier is of the same design as the driver side test, symmetrically flipped about the X-axis.
- The vehicle is aligned with the rigid barrier such that the left edge of the barrier face is offset to the right of the vehicle centerline by 25 ± 1 percent of the vehicle width (Figure E-1)

Figure E-1
Vehicle Overlap with Flat 150 Small Overlap Barrier

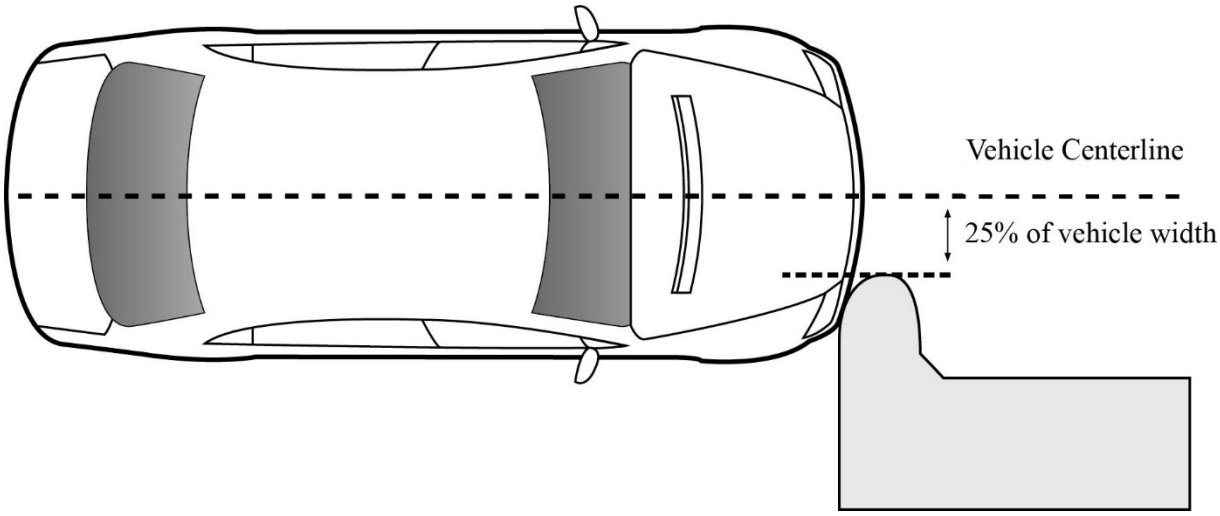

- The on-board brake system is set to 0.5 second after skate release.
- In addition to the driver dummy, a 50th percentile male Hybrid III dummy (49 CFR 572 (E) is positioned in the front passenger seat.

The front passenger seat is set in the midtrack (fore/aft) of its fully lowered position, if separately adjustable in a vertical direction. For manual seats with an even number of notches, the notch that is closest to the measured midtrack range is chosen. Adjustable seat backs are placed in the manufacturer's nominal design riding position.

Determine the initial H-point of the passenger dummy following the procedure outlined in SAE J826. For the test, the H-point of the dummy should be within 10 mm of the target H-point from the H-point drop at the final seat position. The dummy's pelvic angle should be within 22.5 ± 2.5 degrees. The head should be leveled to within ± 0.5 degrees.

The legs are positioned with the knees 270 mm apart. Each leg is raised with the lower leg extended and then lowered until the thigh touches the seat pan. The lower leg is dropped until the heel of the foot touches the floor. The feet are positioned in the same vertical plane as the knees. Each foot is pointed forward until either the toe touches the floorpan or the ankle contacts the rotational stop. If the ankle stop is contacted, the foot is backed off slightly. If the foot is positioned on an unstable surface, it can be moved inboard until it is stable. Each arm is bent,

© 2017 Insurance Institute for Highway Safety
988 Dairy Rd, Ruckersville, VA 22968. All rights reserved.

raised, and then lowered until the elbow touches the seat bolster. The hands are then lowered palm down onto the thigh, with the middle finger aligned with the knee and thigh bolt holes (Figure E-2).

Figure E-2
Dummy Hand Placement – Passenger side

- The target test weight of the vehicle is 200-275 kg greater than the measured curb weight.

- Figure E-3 shows the additional points taken on the passenger side of the occupant compartment, including the following:

  Upper dash (one point): The upper dash point is obtained by adding 25 cm to the lateral coordinate of the passenger seat centerline. This defines a line of points on the edge of the upper dash. The upper dash point is located on the rearward most (toward the rear of the vehicle) point on this line. This point must be located at least 30 cm above the brake pedal reference point, which had been taken on the driver side, to ensure a vertical location high enough to represent a location that could be contacted by the driver's upper body or head. If the rearward most point is less than 30 cm above the brake pedal reference point, the upper dash point is located at this 30 cm reference location. In the event this point falls on a 'soft component' (e.g. air vent), follow the procedure outlined in the driver side intrusion measurement section of this document (Figure 8).

© 2017 Insurance Institute for Highway Safety
988 Dairy Rd, Ruckersville, VA 22968. All rights reserved.

Center dash (one point): The marked reference is the lateral coordinate of the front passenger seat centerline, 10 cm above the upper dash point. If this point falls on the airbag door, after the crash, this point is measured by folding the airbag doors back into their undeployed position.

Figure E-3
Locations for Measuring Vehicle Intrusion – Passenger side

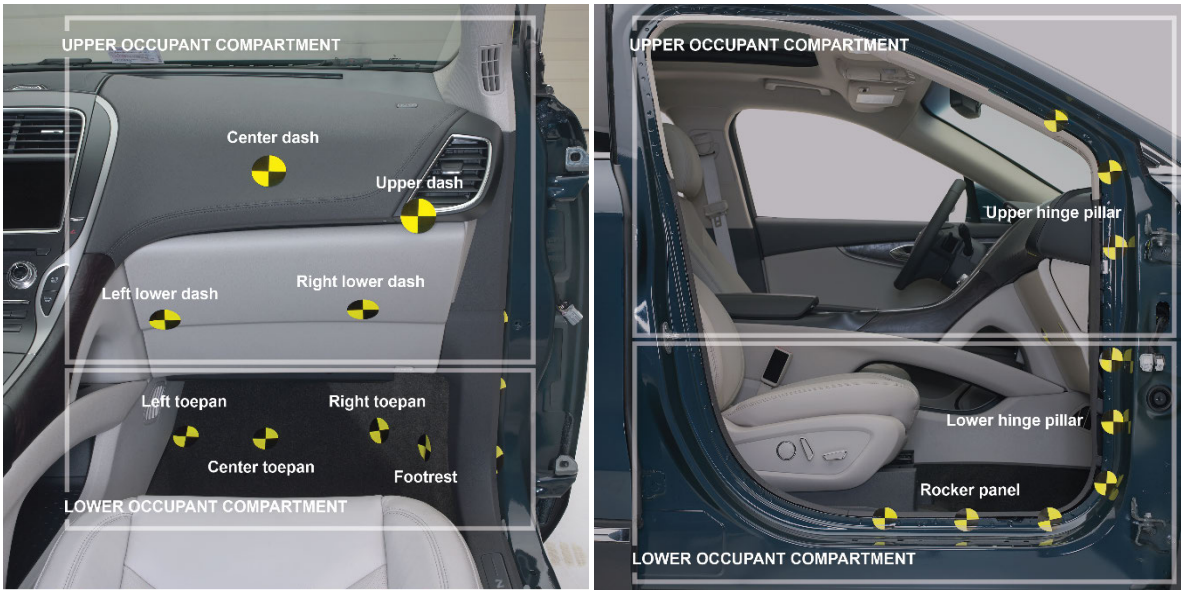

Right and left lower dash (two points): The left lower dash lateral coordinate is defined by subtracting 15 cm from the coordinate of the right passenger seat centerline reference, while the right lower dash point is defined by adding 15 cm to the seat centerline. The vertical coordinate of both the left and right points is defined as 45 cm above the height of the driver floor (without floormats). If the panel loosens or breaks away in the crash, the postcrash measurements are taken by pressing and holding the panel against the underlying structure.

Right footrest (one point): The vertical coordinate for the footrest measurement location is the vertical coordinate of the brake pedal reference. The lateral coordinate of the footrest is obtained by adding 25 cm to the front right passenger seat centerline coordinate. The procedure for marking the floor at this point is the same as the driver side tests.

Seat bolts (two points): The marked reference is the two rear bolts that anchor the right front passenger seat to the floor of the vehicle.

Toepan (three points): The center toepan point is on the front right passenger seat centerline. The left toepan point is 15 cm inboard of the centerline coordinate, and the right is 15 cm outboard of the centerline. The vertical reference for all three toepan measurement locations is the vertical coordinate of the brake pedal reference. The procedure for marking the floor at these points is the same as the driver side tests.

Lower (three points) and upper (three points) hinge pillar: The hinge pillar is measured at the innermost surface of the right front door opening, typically on the pinch weld. The vertical coordinates for the three lower points are obtained by adding 0 cm (lower hinge pillar point 1), 7.5 cm (lower hinge pillar point 2), and 15 cm (lower hinge pillar point 3) to the brake pedal reference point.

© 2017 Insurance Institute for Highway Safety
988 Dairy Rd, Ruckersville, VA 22968. All rights reserved.

The upper points are obtained by adding 45 cm (upper hinge pillar point 1), 52.5 cm (upper hinge pillar point 2), and 60 cm (upper hinge pillar point 3)**.**

Rocker panel (three points): The rocker panel is measured at the innermost surface of the right front door opening, typically on the pinch weld. The longitudinal coordinates are obtained by adding 20 cm (rocker panel point 1), 35 cm (rocker panel point 2), and 50 cm (rocker panel point 3) to the brake pedal reference point. If the 20 cm point is forward of the actual door frame, this point is located 5 cm rearward of the lower hinge pillar point.

- The offboard camera locations are the same distance from impact point, symmetrically flipped about the X-axis.

- The onboard camera locations are specific to right side tests. Figure E-3 shows the onboard high-speed camera locations, and Table 1 lists the camera view and focal length.

Figure E-3
Onboard High-Speed IDT Camera Positions – Right Side Test

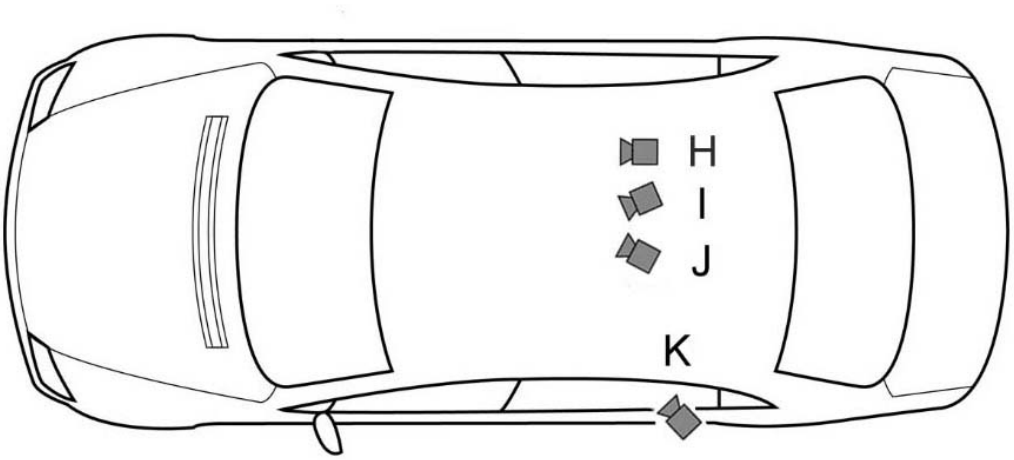

Table 2
Onboard High-Speed IDT Digital Cameras – Focal Points and Settings – Right Side Test

	H	I	J	K
Camera Position	**Inside Roof Passenger SIde**	**Inside Roof, Center**	**Inside Roof, Driver Side**	**Rear Driver Side Door**
Focal point	Rear view of passenger	Over the shoulder of driver	Over the shoulder of passenger	Driver and passenger, wide
Focal length (mm)	12	10	12	10

© 2017 Insurance Institute for Highway Safety
988 Dairy Rd, Ruckersville, VA 22968. All rights reserved.

Passenger Dummy Clearance Measurement Definitions

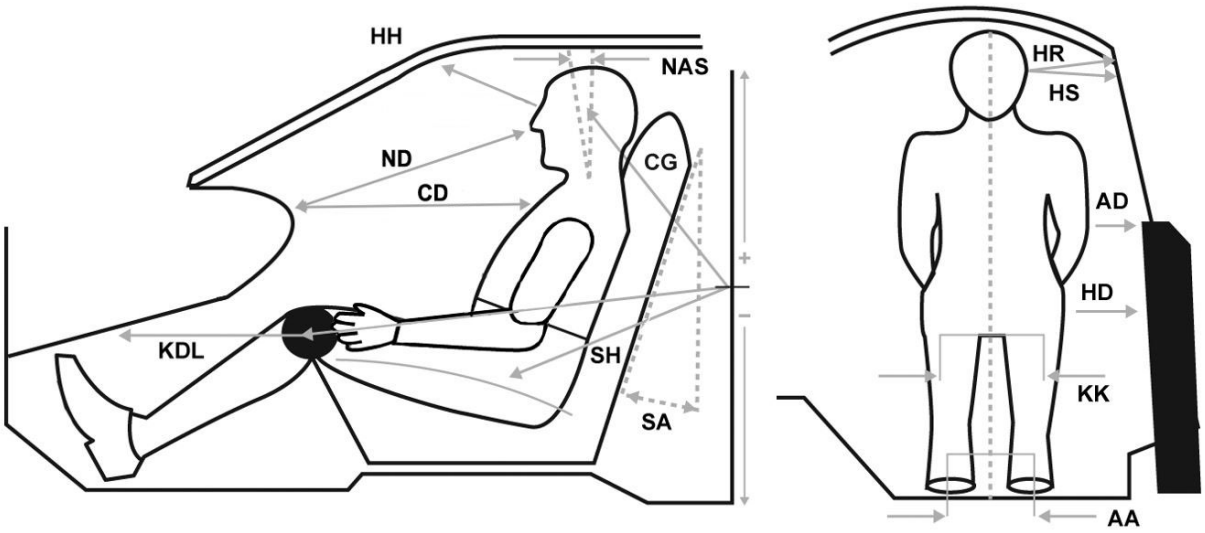

Location	Code	Definition of Measurement
Ankle to ankle	AA	Taken between the center points of both ankles, after the feet are positioned.
Arm to door	AD	Horizontal measurement taken from the center point of the elbow to the first contact point of the door panel.
Chest to center dash	CD	Taken from the clavicle adjustment holes in the chest to the center dash position.
Chest to dash, minumum	CDM	Minimum horizontal distance measured from the dash to the dummy chest (not shown in figure).
Head to A-pillar	HA	Horizontal measurement taken from the center of the head outboard center of gravity target to the A-pillar (not shown in figure).
H-point to door	HD	Horizontal measurement taken from the H-point hole to the first contact point of the door panel.
Head to header	HH	Taken from the center point between the eyes to the header directly in front of dummy.
Head to roof	HR	Taken from the center of the outboard target to the roof edge (not the upper edge of the vehicle door), perpendicular to the longitudinal axis of the vehicle. If a tape measure is held from the target and extends below the roof, the point to measure is at the low edge of the roof line, which will make contact with the tape measure.
Head to side window	HS	Taken from the center of the outboard target to the side window, measured horizontally and perpendicular to the longitudinal axis of the vehicle. In cases where the window is not fully up, a flat bar should be placed across the window opening to simulate the position of the window.
Knee to dash, left	KDL	Taken from the knee pivot point to the point on the dash that is directly level with the center of the knee.

© 2017 Insurance Institute for Highway Safety
988 Dairy Rd, Ruckersville, VA 22968. All rights reserved.

Location	Code	Definition of Measurement
Knee to dash, right	KDR	Taken from the knee pivot point to the point on the dash that is directly level with the center of the knee (not shown in figure).
Knee to knee	KK	With the legs in a vertical plane after the feet are placed per IIHS protocol, the measurement is taken from the outside flange to the outside flange of the knees. The minimum distance is 270 mm (10.6 inches).
Neck angle, seated	NAS	Taken from the neck when the dummy is seated across two of the “vertebral disks” of the neck.
Nose to center dash	ND	Taken from the tip of the nose to the center dash position.
Pelvic angle	PA	Taken from the instrumented pelvis sensor (if available) or by placing an inclinometer on the H-point bar, which is used to align the H-point with previous measurements.
Seat back angle	SA	Taken on the front passenger seat back unless otherwise directed by the manufacturer at which time it will be properly noted along with the measurement.
Striker to head center of gravity, horizontal	CGH	Horizontal measurement taken from the head center of gravity to the driver door striker. Value is negative if the head center of gravity is forward of the striker.
Striker to head center of gravity, lateral	CGL	Lateral measurement taken from the head center of gravity to the driver door striker.
Striker to head center of gravity, vertical	CGV	Vertical measurement taken from the head center of gravity to the driver door striker. Value is negative if the head center of gravity is below the striker.
Striker to H-point, horizontal	SHH	Horizontal measurement taken from the H-point to the driver door striker. Value is negative if the H-point is forward of the striker.
Striker to H-point, vertical	SHV	Vertical measurement taken from the H-point to the driver door striker. Value is negative if the H-point is below the striker.
Striker to knee	SK	Taken from the center point of the knee to the striker.
Striker to knee angle	SKA	Taken from the center point of the knee to the striker.
Torso recline angle	TRA	Taken from the H-point to the head’s center of gravity

© 2017 Insurance Institute for Highway Safety
988 Dairy Rd, Ruckersville, VA 22968. All rights reserved.

APPENDIX F

Document Revision History

Revisions to Version VI of the protocol compared with Version V:

- Passenger-side small overlap test protocol updated, including changes to the maximum test weight, passenger dummy hand placement, nomenclature of intrusion points, on-board brake activation time and final seat placement.
- Hybrid vehicle high-voltage batteries to be charged to manufacturer recommendations.

Revisions to Version V of the protocol compared with Version IV:

- The high-voltage battery state of charge (SoC) for hybrid and full-electric vehicles was reduced from 95 to 12.5 percent prior to conducting a crash test.

Revisions to Version IV of the protocol compared with Version III:

- Additional on-board digital high speed camera added, along with its mass.
- On-board brake activation time changed from 1.5 to 1.0 second from skate release.
- New vehicle width tape scheme illustration and description for determining vehicle overlap was added.
- Test vehicle selection criteria was updated to better cover current trends in vehicle sales and production.
- Additions/deviations to protocol for conducting passenger-side tests was added (Appendix E).

Revisions to Version III of the protocol compared with Version II:

- The weight of the onboard test equipment was updated.
- The preferred vehicle tie-down method is outlined.
- The location of the vehicle accelerometer was changed.
- The tibia index calculation was moved to Frontal Offset Guideline for Rating Injury Measures
- The type of high-speed cameras used for the test and their locations was updated.
- Illustrations added to Appendix 2; Occupant Excursion

Revisions to Version I of the protocol compared with Version II:

- Addition of a marker on the outside of the driver door locating the center of the steering wheel.
- The standard location for postcrash recovery points was moved to the non-struck (right) side rear door frame.
- The method for measuring occupant excursion changed from using seat belt spool out data to a direct measurement of occupant excursion (also Appendix A).
- The location for measuring forward coverage of the side head protection airbag changed from a specific vertical location to a zone of measurement (also Appendix B with updated photographs).

Revisions to Version I, October 2012 of the protocol compared with Version I, August 2012:

- Intrusion measurement point locations on the lower and upper hinge pillar have been named (points 1, 2, and 3) to correspond with their vertical coordinates.
- Intrusion measurement point locations on the rocker panel have been named (points 1, 2, and 3) to correspond with their longitudinal coordinates.
- Corrected inconsistencies in the video analysis procedure in determining the forward edge of the side curtain airbag compared with the Excel spreadsheet.
- In step 5 of Appendix A, the leading edge of the side curtain airbag is considered to be the largest value (most forward location), not the smallest value.

© 2017 Insurance Institute for Highway Safety
988 Dairy Rd, Ruckersville, VA 22968. All rights reserved.

U.S. DEPARTMENT OF TRANSPORTATION

NATIONAL HIGHWAY TRAFFIC SAFETY ADMINISTRATION

LABORATORY TEST PROCEDURE
FOR
NEW CAR ASSESSMENT PROGRAM
FRONTAL IMPACT TESTING

September 2012

OFFICE OF VEHICLE SAFETY
OFFICE OF CRASHWORTHINESS STANDARDS
1200 NEW JERSEY AVE, SE
ROOM W43-410
WASHINGTON, DC 20590

This publication is distributed by the U.S. Department of Transportation, National Highway Traffic Safety Administration, in the interest of information exchange. The opinions, findings and conclusions expressed in this publication are those of the author(s) and not necessarily those of the Department of Transportation or the National Highway Traffic Safety Administration. The United States Government assumes no liability for its contents or use thereof. If trade or manufacturers' name or products are mentioned, it is because they are considered essential to the object of the publication and should not be construed as an endorsement. The United States Government does not endorse products or manufacturers.

NCAP LABORATORY TEST PROCEDURE
TABLE OF CONTENTS

1. PURPOSE AND APPLICATION 1

2. GENERAL REQUIREMENTS 1

3. SECURITY 2

3.1 RULES FOR CONTRACTORS 2

4. GOOD HOUSEKEEPING 3

5. TEST SCHEDULING AND MONITORING 3

6. FACILITY AND EQUIPMENT – PRETEST REQUIREMENTS 4

6.1 TOW ROAD 4
6.2 TEST VEHICLE PREPARATION BUILDING/STRUCTURE 4
6.3 TOW AND GUIDANCE SYSTEMS 4
6.4 FIXED COLLISION BARRIER 6
6.5 TEST VEHICLE VELOCITY MEASUREMENT 6
6.6 TEST BRAKE ABORT SYSTEM 7
6.7 STATIC ROLLOVER DEVICE 7

7. GOVERNMENT FURNISHED PROPERTY (GFP) 8

7.1 TEST VEHICLES 8
7.2 ANTHROPOMORPHIC TESTING DEVICES 8
7.3 LOAD CELL BARRIER 9

8. CALIBRATION AND TEST INSTRUMENTATION 10

9. PHOTOGRAPHIC DOCUMENTATION 13

9.1 CAMERAS 13
9.2 COLORING REQUIREMENTS FOR PHOTOGRAPHIC PURPOSES 16
9.3 VEHICLE AND DUMMY PHOTOGRAPHIC COVERAGE (REAL-TIME) 17
9.4 IMPACT EVENT MARKERS 18
9.5 PHOTOGRAPHIC TARGETS AND TAPE FOR TEST VEHICLE 18
9.6 TARGET VEHICLE INFORMATION PLACARDS 20
9.7 DOCUMENTATION VIDEO TITLE AND SEQUENCE 21
9.8 DOCUMENTATION VIDEO RECORDING AND EDITING 21
9.9 STILL PHOTOGRAPHS 22

10. DEFINITIONS 22

11. TEST EXECUTION 24

11.1 TEST VEHICLE PREPARATION 24
11.2 TEST DUMMY PREPARATION, POSITIONING, AND PLACEMENT 32

11.3 LOAD CELL BARRIER PREPARATION 45
11.4 VEHICLE MEASUREMENTS 45
11.5 ELECTROMAGNETIC INTERFERENCE 49

12. TEST DATA DISPOSITION 50

12.1 TEST DATA LOSS 50
12.2 DATA PROCESSING 52
12.3 RECOMMENDED DATA TRACE ORDER 54
12.4 PERFORMANCE REQUIREMENTS – NOTIFICATION OF TEST RESULTS 56
12.5 NCAP TEST DELIVERABLES 56
12.6 DATA RETENTION BY THE CONTRACTOR 56
12.7 DATA AVAILABILITY TO THE PUBLIC 56

NCAP LABORATORY TEST PROCEDURE

LIST OF FIGURES

FIGURE 1 - TYPICAL FRONTAL NCAP RIGID BARRIER IMPACT TEST FACILITY 6
FIGURE 2 - CAMERA POSITIONS FOR FRONTAL IMPACTS 14
FIGURE 3 - REFERENCE PHOTO TARGETS 19
FIGURE 4 - REFERENCE PHOTO TARGETS, CONT'D 19
FIGURE 5 - VEHICLE ACCELEROMETER LOCATIONS 26
FIGURE 6 - DUMMY MEASUREMENTS FOR FRONT SEAT PASSENGERS 34
FIGURE 7 - EXTERIOR VEHICLE MEASUREMENTS 46
FIGURE 8 - DOOR OPENING WIDTH AND WHEELBASE MEASUREMENTS 47
FIGURE 9 - DRIVER COMPARTMENT MEASUREMENTS 48
FIGURE 10 - VEHICLE CRUSH PROFILE MEASUREMENTS 49

NCAP LABORATORY TEST PROCEDURE

APPENDICES

APPENDIX A	PART 572E (50TH PERCENTILE MALE) DUMMY PERFORMANCE CALIBRATION TEST PROCEDURE
APPENDIX B	PART 572O (5TH PERCENTILE FEMALE) DUMMY PERFORMANCE CALIBRATION TEST PROCEDURE
APPENDIX C	PART 572N (6-YEAR OLD) DUMMY PERFORMANCE CALIBRATION TEST PROCEDURE
APPENDIX D	PART 572P (3-YEAR OLD) DUMMY PERFORMANCE CALIBRATION TEST PROCEDURE
APPENDIX E	PART 572R (12-MONTH-OLD) DUMMY PERFORMANCE CALIBRATION TEST PROCEDURE
APPENDIX F	DRIVER AND PASSENGER DUMMY SEATING AND POSITIONING PROCEDURES
APPENDIX G	REDUNDANT ACCELEROMETERS – RECOMMENDED PRACTICE
APPENDIX H	FOOT INSTRUMENTATION – RECOMMENDED PRACTICE
APPENDIX I	COMPUTER PROGRAMS
APPENDIX J	FMVSS 212, 219 (PARTIAL), 301, AND 305 REQUIREMENTS FOR FRONTAL IMPACT NCAP
APPENDIX K	METRIC CONVERSION
APPENDIX L	UPPER NECK LOAD CELL POLARITY CHECK
APPENDIX M	HEAD NINE-ACCELEROMETER ARRAY POLARITY CHECK
APPENDIX N	TEST DELIVERABLES AND REPORT GUIDELINES
APPENDIX O	RESERVED
APPENDIX P	LOAD CELL BARRIER CONFIGURATIONS

REVISION CONTROL LOG

FOR NCAP LABORATORY
TEST PROCEDURES

FRONTAL RIGID BARRIER IMPACT TEST

TEST PROCEDURE		NEW CAR ASSESSMENT PROGRAM FRONTAL IMPACT TESTING		DESCRIPTION
REV. No.	**DATE**	**AMENDMENT**	**EFFECTIVE DATE**	
00	09/22/2010		09/22/2010	Minor changes to procedure. Photo list update and clarifications. Removal of test reporting requirements from main procedure and insertion in Appendix N.
01	01/13/2010		01/13/2010	Minor changes to procedure. Added information to allow for high resolution barrier. Updated Appendix G to allow for redundant femur load cells.
02	05/18/2012		05/18/2012	Minor changes to procedure. Changes test speed measurement requirements to km/h. Moved FMVSS 305 data sheets to a separate procedure. Removed information in Appendix O and reserved. Moved load cell barrier information to Appendix P.
03	09/24/2012		09/24/2012	Minor changes to test procedure. Reinstated vehicle Z accelerometers. Changed data sheet 1 in Appendix N.
04				
05				
06				
07				
08				

1. PURPOSE AND APPLICATION

The Office of Crashworthiness Standards (OCWS) provides Contractor laboratories with Laboratory Test Procedures as guidelines for obtaining crash test data. The data are used to provide ratings that allow consumers to compare the crashworthiness of vehicles and make informed purchasing decisions. In addition, it provides market incentives for automobile manufacturers to produce safer vehicles. The purpose of the OCWS Laboratory Test Procedure is to present a uniform testing and data recording format, and to provide suggestions for the use of specific equipment and procedures. If any Contractor views any part of an OCWS Laboratory Test Procedure to be in conflict with a Federal Motor Vehicle Safety Standard (FMVSS) or observes deficiencies in a Laboratory Test Procedure, the Contractor is required to advise the Contracting Officer's Technical Representative (COTR) and resolve the discrepancy prior to the start of NCAP testing.

Every Contractor is required to submit a detailed internal test procedure to the COTR before initiating its NCAP test program. The procedure must include a step-by-step description of the methodology to be used. The Contractor's test procedure shall contain a complete listing of test equipment with make and model number. The list of test equipment shall include instrument accuracy and calibration dates. All equipment shall be calibrated in accordance with the manufacturer's instructions. There shall be no contradictions between the Laboratory Test Procedure and the Contractor's in-house test procedure. Written approval of the in-house test procedures shall be obtained from the COTR before initiating the NCAP test program. The OCWS Laboratory Test Procedures are not intended to limit or restrain a Contractor from developing or utilizing any testing techniques or equipment which will assist in procuring the required data. These Laboratory Test Procedures do not constitute an endorsement or recommendation for use of any product or method. However, the application of any such testing technique or equipment is subject to prior approval of the COTR.

> **NOTE: The NCAP Laboratory Test Procedures, prepared for the limited purpose of use by independent laboratories under contract to conduct NCAP tests for the OCWS, are not rules, regulations, or NHTSA interpretations regarding the meaning of an FMVSS or this procedure. The Laboratory Test Procedures may not include all of the various FMVSS minimum performance requirements. Recognizing applicable test tolerances, the Laboratory Test Procedures may specify test conditions that are more or less severe than the minimum requirements of the standard**.

2. GENERAL REQUIREMENTS

This laboratory test procedure is derived from the FMVSS No. 208 test procedure Each vehicle shall be tested by impacting it into an instrumented, fixed, rigid concrete barrier that conforms to the definition in Part 571.3—Definitions, 49 CFR Part 571.3. The contract laboratories are directed by this test procedure to use an impact velocity of 56.30

± 0.80 km/h). Any changes to or deviations from this test procedure must be approved by the Contracting Officer's Technical Representative (COTR).

NOTE: Vehicles are tested with a 50th percentile male Hybrid III in the driver position and a 5th percentile female Hybrid III placed in the front right outboard seating position. When tested according to the conditions outlined in this test procedure, each 50th percentile occupant shall comply with the injury criteria listed in section S6 of 49CFR571.208 and each 5th percentile occupant shall comply with injury criteria listed in section S15 of 49CFR571.208.

3. SECURITY

The Contractor shall provide appropriate security measures to protect NCAP test vehicles, dummies, load cell barrier and any GFP during the entire crash test program and shall be responsible for all equipment removed from test vehicles before and after the crash test. Any security problems which arise shall be reported by telephone to the Industrial Property Manager (IPM), Office of Acquisition Management, within two (2) working days after the incident. A letter containing specific details of the security problem shall be sent to the IPM (with copy to the COTR) within 48 hours. Vehicle equipment thefts or acts of vandalism must be reported to NHTSA authorities immediately. Under no circumstances shall any vehicle components be removed during a visitor inspection unless authorized by OCWS engineers. All data developed from the crash test program shall be protected.

NO INDIVIDUALS OTHER THAN THE CONTRACTOR'S PERSONNEL DIRECTLY INVOLVED IN THE CRASH TEST PROGRAM SHALL BE ALLOWED TO WITNESS A FRONTAL NCAP TEST OR INSPECT, PHOTOGRAPH OR VIDEOTAPE ANY TEST VEHICLE UNLESS AUTHORIZATION IS GRANTED BY A REPRESENTATIVE FROM THE OCWS. IT IS THE CONTRACTOR'S RESPONSIBILITY TO SECURE THE TEST SITE AREA DURING A TEST AND TO SHIELD THE BARRIER IMPACT AREA FROM THE PUBLIC VIEW BY THE USE OF CANVAS OR OTHER BLOCKING DEVICES.

3.1 RULES FOR CONTRACTORS

A. No vehicle manufacturer's representative(s) or anyone other than the Contractor's personnel working on NCAP contracts and NHTSA personnel shall be allowed to inspect NHTSA vehicles or witness vehicle preparations and/or crash testing without prior permission of the OCWS. Such permission can never be assumed.

B. All communications with vehicle manufacturers shall be referred to the OCWS, and at no time shall the Contractor release crash test data, videos, or photos without the permission of the OCWS.

C. Unless otherwise specified, the vehicle manufacturer's representatives shall only be authorized to visit the Contractor's test facility on the day that the test is scheduled, and the representatives must be escorted by NHTSA and/or Contractor personnel.

D. Test vehicle inspection by the vehicle manufacturer's representative(s) shall be limited to 30 minutes prior to the start of vehicle impact test. Post-test inspection shall be limited to 1 hour after Contractor personnel have completed their test tasks.

> **NOTE: No vehicle parts should be tampered with or removed from the vehicle without the consent of the COTR. Individual data plots cannot be viewed by manufacturer representatives until they are reviewed by NHTSA personnel and granted express permission by the COTR.**

E. Photographs and video of the test vehicle, associated test equipment and test event shall be allowed. However, test personnel shall not be included in any photographic coverage, and videos of vehicle preparation must be approved by OCWS. The Contractor's personnel shall not respond to any questions from the manufacturer's representatives regarding NCAP. All questions shall be referred to the COTR, an OCWS representative present at the test site, or to OCWS.

F. The Contractor shall permit public access to and inspection of the test vehicles and related data during the times specified by the NHTSA COTR. NHTSA shall advise interested parties that such access and inspection shall be limited to a specified day and hours and require prior approval from the Office of Crashworthiness Standards. The Contractor shall refer all visit requests from vehicle manufacturer's representatives and consumers to the Office of Crashworthiness Standards. This service shall be included as an incidental part of the crash test program and will not result in any additional cost to the NHTSA. The Contractor shall make his own arrangements with interested parties for expenses incurred beyond providing access and inspection services. All inquiries by manufacturers concerning NCAP (vehicle, procedures, data, etc.) shall be directed to OCWS representatives.

4. GOOD HOUSEKEEPING

Contractors shall maintain the entire vehicle testing area, dummy calibration area, test fixtures and instrumentation in a neat, clean, and painted condition with test instruments arranged in an orderly manner consistent with good test laboratory housekeeping practices.

5. TEST SCHEDULING AND MONITORING

Tests shall be completed as required in the contract. The COTR will make adjustments to the crash test schedule in cases of unusual circumstances, such as inclement weather. All testing shall be coordinated to allow monitoring by the COTR.

6. FACILITY AND EQUIPMENT – PRETEST REQUIREMENTS

6.1 TOW ROAD

A. The tow road should be at least 500 feet in length and terminate at the face of the non-energy-absorbing barrier as shown in **FIGURE 1**. The first 100 feet (approximate) from the head of the tow road will be used to accelerate the test vehicle up to the specified velocity without exceeding 0.5g, which would affect the positioning of the P572 test dummies in the test vehicle. The second 100 feet (approximate) of tow road shall be used for dummy stabilization. At this juncture, the test vehicle should have reached the desired impact velocity and should be experiencing zero acceleration. The remaining 300 feet (approximate) of tow road will be used for test vehicle speed stabilization.

B. The width of the tow road should be approximately 8 to 14 feet and should be straight and level so that the test vehicle does not oscillate vertically in excess of 0.29 G's.

C. A photographic pit will be located in the tow road at the stationary barrier face so that structural crush and possible fluid leakage of Stoddard solvent can be photographed during the impact event. The pit shall be covered using the following guidelines:

1. Use a material that allows for use of pit cameras.
2. The covering and its supports should simulate road strength in case the vehicle structure should come in contact with it during the NCAP test.
3. The entire pit should be covered except for the area needed for the tow system to operate.
4. Precautions must be taken to ensure there is no electromagnetic interference generated by the pit cover material.

6.2 TEST VEHICLE PREPARATION BUILDING/STRUCTURE

The following applies to labs with outdoor impact surfaces. In order that the test vehicle can be prepared for crash testing at the head of the tow road during hot or cold weather, the Contractor shall have a temperature-controlled building constructed which is large enough to house the test vehicle and allow for government, vehicle manufacturer, and laboratory personnel to move around the test vehicle. The building climate control must be capable of maintaining the ambient air temperature between 20.6°C and 22.2°C (69°F and 72°F).

6.3 TOW AND GUIDANCE SYSTEMS

A. A guidance system is required to assure that the test vehicle impacts the barrier at the proper angle. At most laboratories, a monorail running down the center of the tow road is used to guide a dolly to which the vehicle is connected. **NO HARD POINT CONNECTIONS BETWEEN THE MONORAIL AND TEST VEHICLE WILL BE ALLOWED.**

B. A “soft” lateral guidance system is required to assure that the test vehicle will impact the barrier face at the designated 90° angle (straight perpendicular impact). It is suggested that the Contractor's lateral guidance system include steel cables or chains extending from the vehicle lower 'A' arms or front frame rails to the monorail dolly or shoe. The dolly will ride on the monorail and may engage the tow cable through a set of gripper jaws. The dolly will be stopped at the end of the tow road monorail or at the head of the photographic pit releasing the vehicle cables or chains at the same time allowing the vehicle to proceed to the barrier face for impact.

C. A “soft” connection (seat belt webbing, steel cables, chains, etc.) between the tow cable attachment device and the test vehicle front frame assembly shall be provided by the Contractor. **NO HARD POINT CONNECTIONS BETWEEN THE TOW CABLE AND THE TEST VEHICLE SHALL BE ALLOWED.** The tow cable attachment shall release from the cable so that the vehicle will roll into the barrier at a constant velocity (no acceleration).

D. The tow system must be capable of ensuring that the test vehicle shall impact the barrier face at a speed of 56.30 km/h ± 0.80 km/h, or range of 55.50 km/h to 57.10 km/h. ***Any photographs of the test speed readout must show the impact speed in km/h, to two decimal places ONLY. Test data submitted without a photograph of the test speed readout, or displaying a primary test speed that does not conform to this range may be considered nonconforming.***

FOR THE VEHICLE TOWING AND LATERAL GUIDANCE SYSTEMS, THE PERFORMANCE REQUIREMENT OF “SOFT” CONNECTIONS IS CONSTRUED TO BE SYSTEMS WHICH <u>DO NOT</u> OBSTRUCT OR RESTRAIN THE VEHICLE STRUCTURAL DEFORMATION DURING IMPACT. SYSTEMS THAT FAIL TO COMPLY WITH THIS REQUIREMENT ARE INTERPRETED AS SYSTEMS WITH 'HARD-POINT' CONNECTIONS, AND ARE GROUNDS FOR RETEST.

IN ADDITION, ENGAGEMENT OF THE VEHICLE TOWING AND GUIDANCE SYSTEMS SHALL NOT ALTER THE NATURAL ATTITUDE OF THE VEHICLE. MODIFICATION OF ANY KIND TO THE TEST VEHICLE FOR TOWING PURPOSES, SUCH AS WELDING, DRILLING, ETC IS PROHIBITED.

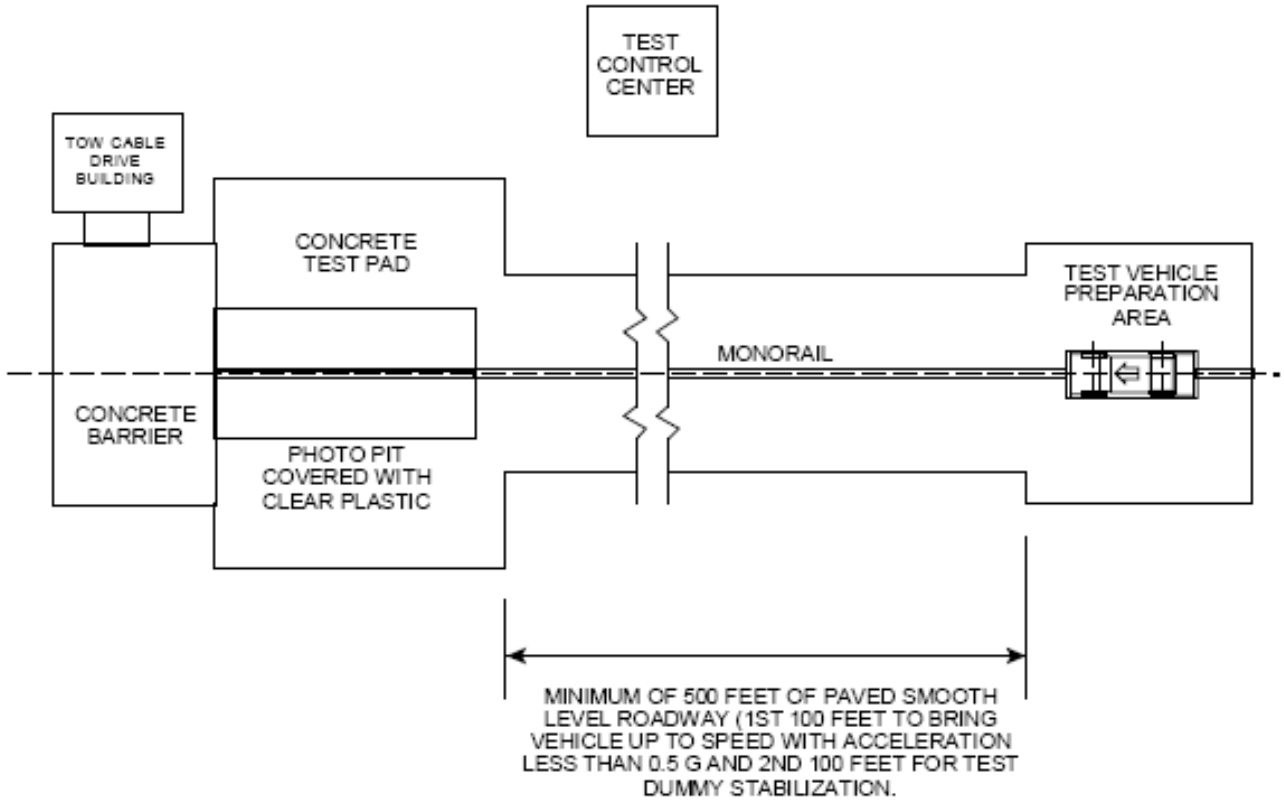

Figure 1 - Typical Frontal NCAP Rigid Barrier Impact Test Facility

6.4 FIXED COLLISION BARRIER

The basic fixed collision barrier must conform to the definition in Part 571.3—Definitions, 49 CFR Part 571.3, and at a minimum should consist of a reinforced concrete structure, 6 feet high, 6 feet thick, and 12 feet wide, weighing approximately 100,000 pounds. The Government furnished property (GFP) load cell barrier shall be firmly attached to the reinforced concrete structure prior to every test unless otherwise directed by OCWS.

6.5 TEST VEHICLE VELOCITY MEASUREMENT

A. The speed of the test vehicle must be controlled to obtain and maintain the vehicle speed in the range of 56.30 km/h ± 0.80 km/h, or range of 55.50 km/h to 57.10 km/h.

B. Primary test vehicle impact speed measurement may be achieved by the use of break wires, photocells, or laser beams located within 5 feet of the barrier. Usually, 2 sets of break wires or 2 photocell transmitters and receivers are used in the final speed trap,

which records the time, on an electronic counter, for the test vehicle to travel the last 5 feet before barrier impact. The test vehicle's velocity shall be constant (zero acceleration or deceleration) for a minimum of the last 5 feet of travel before impact. The final velocity shall be measured when the front of the test vehicle is within 1 foot of the barrier face, and the reported impact velocity will take into consideration all of the response characteristics of the entire velocity measurement system utilized in its determination.

C. Impact velocity will be measured by no less than 2 sets of timing devices and the timing devices shall be accurate to within plus or minus .08 km/h (0.05 mph). The basis for the speed measurement (time and distance) shall be calibrated by an instrument traceable to the National Institute of Standards and Technology (NIST). The impact velocity shall be permanently recorded, at a minimum by the photograph taken to satisfy the requirements of this procedure's **Appendix N**, Test Deliverables and Report Requirements. The physical locations of the recorded primary and redundant impact velocity readouts should remain the same from test to test; for example, the laboratory may always choose to display the primary speed on the left-hand side, etc. If the display location of the primary and redundant speeds will change, the COTR should be notified prior to the test. Another method of permanently documenting the velocities recorded by these timing devices is highly encouraged, as is a source of battery power as a backup.

D. A timing device shall monitor the velocity of the test vehicle to permit aborting the test if the vehicle's speed is outside of the specified velocity range. A third timing device may be placed along the tow road at a sufficient distance from the barrier face for monitoring the velocity of the test vehicle and permitting aborting of the test if the vehicles speed is outside the velocity range specified below. If the contractor is capable of documenting the velocity recorded by this third device it may be also used as a third verification of test velocity in any test.

6.6 TEST BRAKE ABORT SYSTEM

A. The laboratory shall provide an abort system capable of bringing the vehicle to a controlled stop.

B. An aborted test can be restarted only after notification is given to the COTR, and dummy positioning and vehicle preparation items affected by the abort have been redone.

6.7 STATIC ROLLOVER DEVICE

The laboratory shall provide a static rollover device, used to conduct an FMVSS No. 301 and/or FMVSS No. 305 test, which must be capable of rotating the impacted test vehicle about it longitudinal axis, with the axis kept horizontal, to each successive increment of 90°, 180°, and 270° at a uniform rate. 90° of rotation must take place within 1 to 3 minutes.

7. GOVERNMENT FURNISHED PROPERTY (GFP)

7.1 TEST VEHICLES

A. The Contractor has the responsibility of accepting NHTSA-provided test vehicles. The Contractor acts on NHTSA's behalf when signing an acceptance of test vehicles. The Contractor must check to verify the following:

1. All options listed on the "window sticker" are present on the test vehicle.
2. Tires and wheel rims are the same as listed.
3. There are no dents or other interior or exterior flaws.
4. The vehicle has been properly prepared and is in running condition.
5. The glove box contains an owner's manual, warranty document, consumer information, and extra set of keys.
6. Proper fuel filler cap is supplied on the test vehicle.
7. Verify that spare tire, jack, lug wrench, and tool kit (if applicable) is located in the vehicle cargo area.
8. The Contractor shall check for damage that may have occurred during transit. The COTR is to be notified of any damage prior to preparation of the vehicle for testing.

7.2 ANTHROPOMORPHIC TESTING DEVICES

An adequate number of Part 572 Subpart E (50th Percentile Male) test dummies and Part 572 Subpart O (5th Percentile Female) test dummies will be furnished to the contract laboratory by the NCAP.

In addition, Part 572 Subpart N (6-year old), Subpart P (3-year old), and Subpart R (12-month-old) test dummies will be provided if needed. The dummies will be instrumented with 6-axis neck load cells and instrumented lower legs; all other dummy instrumentation shall be provided by the Contractor. The Subpart E (50th male), O (5th female), and N (6-year old) dummies shall be stored in an upright sitting position with the weight supported by the internal structure of the pelvis. The dummies shall be held upright by using a strap around the chest or the base of the neck so that the neck is not supporting the weight of the dummy. If used, Subpart P (3-year-old), and R (12-month-old) dummies shall be stored in a hanging position using the bracket and positioning shown in figures 1 and 2. The dummies shall be stored in a secured room, which is kept between 55ºF and 85ºF and 10-70% relative humidity.

The Contractor shall check the dummy components for damage after each crash test and complete a Dummy Damage Checklist that will be included with the post test dummy calibration. The COTR will be kept informed of the dummies' condition in order that replacement parts can be provided.

The Contractor shall keep a detailed record for each dummy, describing parts replaced

and the results of calibration tests.

7.3 LOAD CELL BARRIER

A barrier will be provided to the contract laboratory by the NCAP. Details on some typical load cell barriers can be found in **Appendix P**, **Load Cell Barrier Configurations**

8. CALIBRATION AND TEST INSTRUMENTATION

Before the Contractor initiates the NCAP test program, a test instrumentation calibration system must be implemented and maintained in accordance with established calibration practices. The calibration system shall include the following as a minimum:

A. Standards for calibrating the measuring and test equipment will be stored and used under appropriate environmental conditions to assure their accuracy and stability.

B. All measuring instruments and standards shall be calibrated by the Contractor, or a commercial facility, against a higher order standard at periodic intervals not exceeding 12 months for instruments and 12 months for the calibration standards. Records, showing the calibration traceability to the National Institute of Standards and Technology (NIST), shall be maintained for all measuring and test equipment.

   1. Accelerometers shall be calibrated at a minimum of every six months or after a vehicle fails to meet any minimum performance requirements or after any indication from calibration checks or recent test data that there may be a problem with the accelerometer (whichever comes sooner).
   2. Load cells shall be calibrated at a minimum of every twelve months or after a vehicle fails to meet any minimum performance requirements or after any indication from calibration checks or recent test data that there may be a problem with the load cell (whichever comes sooner).

C. All measuring and test equipment and measuring standards will be labeled with the following information:

   1. Date of calibration
   2. Date of next scheduled calibration
   3. Name of the technician who calibrated the equipment

D. A written calibration procedure shall be provided by the Contractor, which includes as a minimum the following information for all measurement and test equipment:

   1. Type of equipment, manufacturer model number, etc.
   2. Measurement range
   3. Accuracy
   4. Calibration interval
   5. Type of standard used to calibrate the equipment (calibration traceability of the standard must be evident)
   6. The actual procedures and forms used to perform the calibrations.

E. Records of calibration for all test instrumentation shall be kept by the Contractor in a manner that assures the maintenance of established calibration schedules.

F. All such records shall be readily available for inspection when requested by the COTR. The history of the record shall be updated in an electronic file. The calibration system will need the acceptance of the COTR before NCAP testing commences.

G. Test equipment shall receive a system functional check-out using a known test input before and after the test. This check shall be recorded by the test technician(s) and submitted with the final report.

H. Anthropomorphic test devices (ATDs) shall be calibrated before and after every NCAP test. The calibrations and calibration check shall be submitted with the final report.

NOTE: In the event an ATD body region exceeds the performance standards required by FMVSS 208, that region on the ATD must be recalibrated.

I. The Contractor-Furnished data acquisition shall have a sufficient number of channels available for recording and processing signals from ATD and vehicle sensors. It must record time histories of the head and chest acceleration, chest displacement, neck forces and moments, right and left femur axial loads, and any additional instrumentation specified for each test dummy used in the test. Each data channel shall be comprised of a sensor, signal conditioner, data acquisition device, and all interconnecting cables, and must conform to the most recent requirements of SAE Recommended Practice J211-1.

NOTE: In the event of a failure to meet these minimum performance requirements, additional calibration checks of some critically sensitive test equipment and instrumentation may be required for verification of accuracy. The necessity for the calibration will be at the COTR's discretion and will be performed without additional cost.

J. An instrument calibration system capable of performing individual tests on all data channels used in acquiring the acceleration and force data shall conform to the appropriate section of the most recent version of SAE J211-1.

K. A full-face GFE load cell barrier will be mounted onto the face of the Contractor's fixed barrier assembly. All questions regarding the load cell barrier assembly, maintenance and calibration shall be directed to:

Safety Performance Standards
Office of Crashworthiness Standards (NVS-110)
1200 New Jersey Avenue, SE
Washington, D.C. 20590
(202) 366-1740

L. Load cells shall be calibrated on an “as needed” basis and a minimum of one (1) time per year. Accelerometers shall be calibrated on an “as needed” basis and a minimum of once every six (6) months. Need shall be established by pre- and post-test shunt calibration. If

bridge balance remains unchanged (pre- and post-test) and if full-scale shunt calibration results in the same factor, then the transducer characteristics are within calibration. If loads become suspect, linearity of the load cell shall be checked with a universal compression testing machine. If the load cell is non-linear or if pre- and post-test calibration results in a "drift," the load cell shall be returned to the manufacturer for check-out and calibration. Notify the COTR whenever calibration problems arise.

NOTE: Load cells are prone to corrosion when exposed to damp environments. Therefore, extra precautions shall be taken to prevent moisture entering the cells.

CAUTION: *Weep holes are provided for equalization of barometric pressure and must be directed downward. If cells are found with the hole pointing upward, the cell must be removed and calibrated by compression testing. If they are found to be non-linear, they must be returned to the manufacturer. The load cell barrier shall be covered between tests. When the load cell barrier will not be used for a period of time, it shall be removed from the barrier area and placed in a dry storage area. The plywood blocks shall be intact and completely bonded to the backup support. If these blocks receive significant damage during crash testing, they shall be replaced or repaired such that a full surface is present.*

M. Normal practice shall be employed with recorders and equipment calibrations for load cells. When load cells are calibrated, a system calibration procedure shall be employed where the load cell is calibrated in the system used for amplifying/recording the load cell output signal. Alternatively, the system may be calibrated separately, but this is not the desired method.

9. PHOTOGRAPHIC DOCUMENTATION

9.1 CAMERAS

High-Speed Digital Cameras

A. The Contractor shall document the frontal crash event with high-speed digital cameras, arranged as shown in **Figure 2**, that operate at 1000 frames-per-second (fps) for 5 ms before the vehicle contacts the barrier and for 300 ms after vehicle contacts the barrier.

B. The minimum resolution for these cameras shall be 1536 CMOS sensors per every two rows of pixels, with 80% of the horizontal distance of the two rows covered by effective light sensors. There shall be a minimum of 1024 rows of sensors.

C. Glare or lights showing on any glass area (closed windows or vents) must be minimized so that views of the dummies during the test are visible for video analysis.

D. A time zero mark **must be registered in a frame** to indicate when contact with the barrier occurs. Each frame shall contain the camera speed and the frame number beginning with the time zero frames labeled as "Frame 0." The frame numbers prior to time zero shall be negative numbers.

E. If hard copies are needed, digital video files shall be transferred to a compact disc (CD) or DVD as AVI or MPEG format with standard or generally available "codec". These are also the acceptable formats for video files being transferred to the FTP site. Other types of files can be used if approved by the COTR.

F. The vehicle interior may require auxiliary on-board lighting to ensure adequate exposure.

Real Time Camera

The Contractor shall use a "real time" color digital video camera that operates at 24-30 frames per second to document the views indicated below. The video shall be transferred to the FTP site, compact disc (CD) or DVD as .AVI, .MPEG, or .WMV files with standard or generally available "codec".

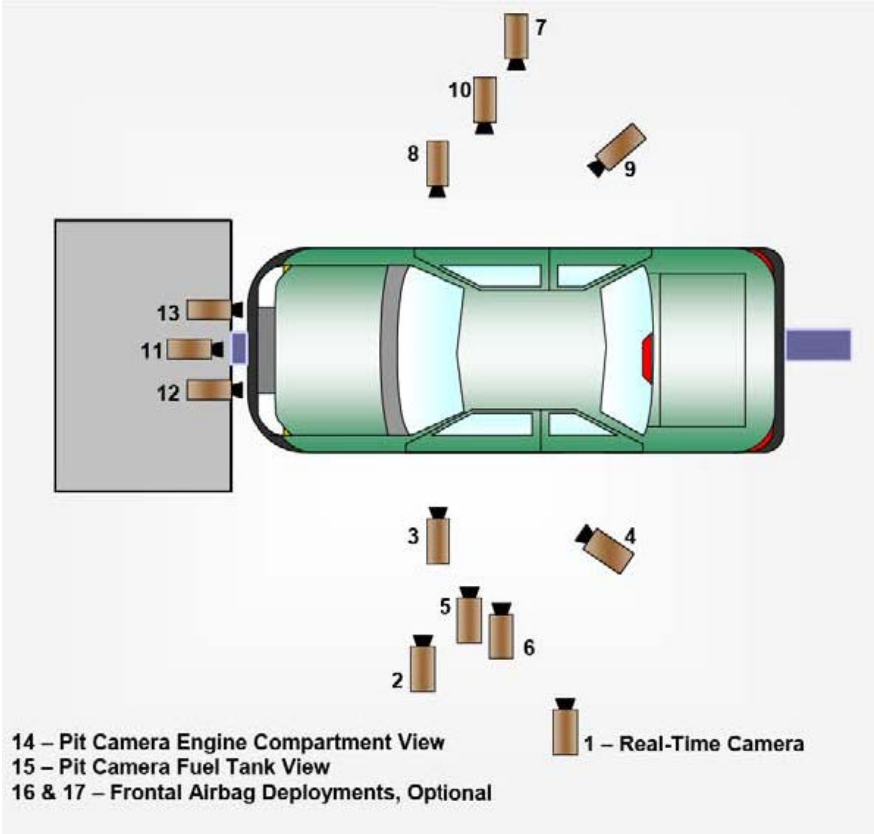

Figure 2 - Camera Positions for Frontal Impacts

Camera 1 Filename: **Camera No. 1 – REAL-TIME LEFT OVERALL**
Real-time (24-30 fps) left side view camera to follow the test vehicle down the tow road, across the photographic pit, and into the barrier face.

Camera 2 Filename: **Camera No. 2 - DRIVER CLOSE-UP**
High-speed left side view camera to cover the vehicle's left side from the barrier face to a point rearward of the vehicle's front seat backs. The centerline of the camera shall be perpendicular to the longitudinal centerline of the vehicle.

Camera 3 Filename: **Camera No. 3 – LEFT FRONT HALF**
High-speed left side view camera positioned adjacent to the vehicle's A-post to document the driver dummy's head movement during the impact event in the windshield area and windshield zone intrusion area. The centerline of the camera shall be perpendicular to the longitudinal centerline of the vehicle.

Camera 4 Filename: **Camera No. 4 – LEFT ANGLE**
High speed left side view camera positioned adjacent to the vehicle's B-post or center post at an angle to document the movement of the driver dummy during the impact event.

Camera 5 Filename: **Camera No. 5 – STEERING COLUMN – TOP***
High speed left side view camera positioned adjacent to the vehicle's B post to document the movement of the vehicle's steering column/wheel assembly relative to the roof targets and the rear sill target during the impact event. (This camera is also used for steering column displacement analysis.) The centerline of the camera shall be perpendicular to the longitudinal centerline of the vehicle.

Camera 6 Filename: **Camera No. 6 – STEERING COLUMN – BOTTOM***
High-speed left side view camera positioned adjacent to the vehicle's left front door and underneath to document the movement of the vehicle's steering column/wheel assembly relative to the roof target and the rear sill targets during the impact event. (This camera is also used for steering column displacement analysis.) The centerline of the camera shall be perpendicular to the longitudinal centerline of the vehicle.

Camera 7 Filename: **Camera No. 7 – RIGHT OVERALL**
High speed right side view camera to cover the entire right side of the test vehicle during the impact event. The centerline of the camera shall be perpendicular to the longitudinal centerline of the vehicle.

Camera 8 Filename: **Camera No. 8 – PASSENGER CLOSE-UP**
High speed right side view camera positioned adjacent to the vehicle's A-post to document the passenger dummy's head movement in the windshield area during the impact event and windshield zone intrusion. The centerline of the camera shall be perpendicular to the longitudinal centerline of the vehicle.

Camera 9 Filename: **Camera No. 9 – RIGHT ANGLE**
High speed right side view camera positioned adjacent to the vehicle’s B post or center post at an angle to document the movement of the passenger dummy during the impact event.

Camera 10 Filename: **Camera No. 10 – RIGHT FRONT HALF**
High speed right side view camera positioned adjacent to the vehicle's right front door to document the movement of the

passenger dummy during the impact event.

Camera 11 Filename: **Camera No. 11 – WINDSHIELD**
High speed overhead camera positioned directly above the vehicle's windshield centerline to cover the windshield area during the entire crash event. A polarizing filter may be used to eliminate windshield glare.

Camera 12 Filename: **Camera No. 12 – DRIVER WINDSHIELD**
High speed front view camera mounted above the barrier face to document the movement of the driver dummy during the impact event and windshield zone intrusion.

Camera 13 Filename: **Camera No. 13 – PASSENGER WINDSHIELD**
High speed front view camera mounted above the barrier face to document the movement of the passenger dummy during the impact event and windshield zone intrusion.

Camera 14 Filename: **Camera No. 14 – PIT FRONT***
High speed photographic pit camera positioned beneath the vehicle's engine compartment to record the vehicle structural crush and document any Stoddard solvent spillage.

Camera 15 Filename: **Camera No. 15 – PIT REAR***
High speed photographic pit camera positioned beneath the vehicle's fuel tank to document any Stoddard solvent spillage.

NOTE: Cameras 16 and 17 (see **Figure 2**) are optional views that may be installed in any feasible location in any NCAP test at the COTR's request. It is suggested that if no special request is made by the COTR, the contractor install cameras 16 and 17 regardless. They can be positioned inside the test vehicle over each dummy's inboard shoulder such that they may capture frontal airbag deployment. In addition, the outside rearview mirrors may be removed to eliminate any camera view obstructions in any NCAP test.

***Camera view may be recorded at 500 fps if necessary.**

9.2 COLORING REQUIREMENTS FOR PHOTOGRAPHIC PURPOSES

A. Vehicle interior surfaces such as the instrument panel, A-post trim panels, door trim panels, console, etc., shall be painted with flat white paint. The air bag indicator light on the dash shall **NOT** be painted so as to be visible prior to testing.

B. Vehicle underbody components such as the floor pan, frame rail members, steering

mechanism, suspension components, engine oil pan, and all fuel system components shall be painted with different colored paint (pink, green, blue, orange, etc.).

C. Parts of the anthropomorphic testing devices shall be coated with colored chalk/water solutions to show contact points with the vehicle's interior, with their own components (such as head to knee contact), and with each other. The chalk/water solution shall be applied after final dummy positioning.

CHALK COLORS TO BE USED ON TEST DUMMIES

DUMMY PART	DRIVER	PASSENGER
Nose	**Red**	**Yellow**
Lips	**Red**	**Yellow**
Face	**Blue**	**Red**
Top of Head	**Yellow**	**Blue**
Back of Head	**Red**	**Yellow**
Left Knee	**Red**	**Yellow**
Right Knee	**Blue**	**Blue (FMVSS 208 uses Red)**
Lower Steering Wheel Rim	**Red**	**N/A**

NOTE: Face chalk should extend below the chin.

D. The driver dummy and passenger dummy clothes shall be contrasting colors so that the motion of each dummy can be identified during video analysis.

E. Tires and wheels should be painted with two white perpendicular lines to reveal tire motion.

9.3 VEHICLE AND DUMMY PHOTOGRAPHIC COVERAGE (REAL-TIME)

A. A real-time camera (24-30 fps) shall be used to document the pre-test and post-test condition of the test vehicle in addition to the pre-test and post-test positions of the test dummies, including, but not limited to, the placement of the lap and shoulder belts. The positions of the belt load cells shall be documented along with the tape supports for the shoulder belt load cells. **Particular attention must be exercised to fully document the proper closing of all vehicle doors, including any rear hatchback or tailgate.**

B. The removal, installation and tightening of the vehicle's fuel filler cap and the cap's rotation to its locked position by Contractor's personnel will be documented. This video footage shall appear in the final released movie print to show that the filler cap was properly installed and tightened prior to the crash test.

The real-time camera (24-30 fps) shall be used to record any Stoddard solvent spillage from the test vehicle after the impact event or during the static rollover test.

9.4 IMPACT EVENT MARKERS

Strobe lights or taped photoflash bulbs (cloth tape on bulb exterior to form small slit for light passage) shall be placed in the field-of-view of all cameras to mark the beginning (time zero) of the crash test. Light from the impact detectors **SHOULD NOT COVER MORE THAN 3 FRAMES OF HIGH-SPEED VIDEO.** Suggested locations for impact detectors or “time zero” markers are as follows:

A. Vehicle's roof panel along longitudinal centerline above windshield header
B. Top surface of vehicle's instrument panel along longitudinal centerline
C. Adjacent to engine oil pan
D. Adjacent to vehicle's fuel tank

9.5 PHOTOGRAPHIC TARGETS AND TAPE FOR TEST VEHICLE

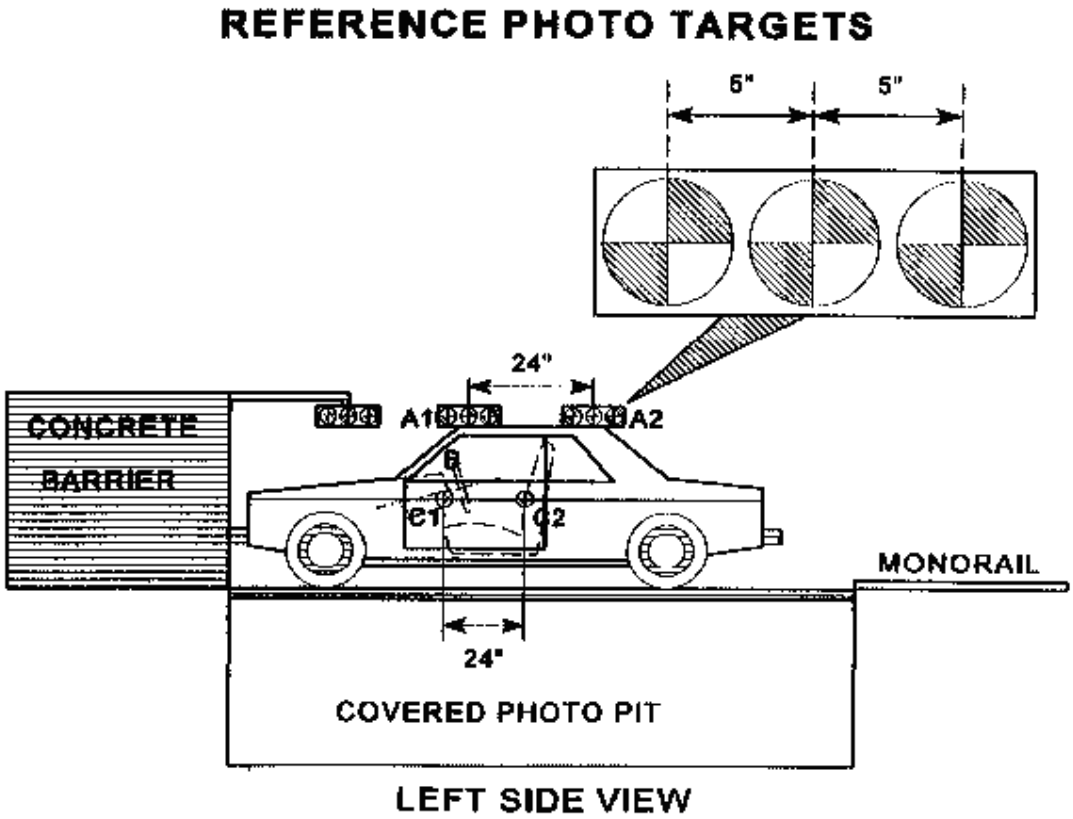

Figure 3 - Reference Photo Targets

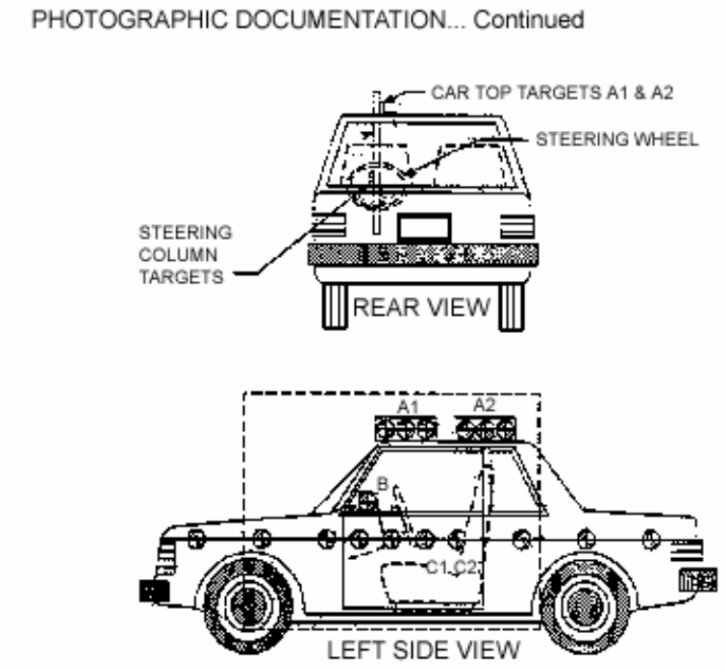

Figure 4 - Reference Photo Targets, Cont'd

A. Reference photographic targets shall be rigidly mounted on the test vehicle and attached to the barrier assembly as shown in **Figures 3** and **4** The primary moving reference targets Al and A2 **MUST BE** mounted 24 inches (609.6mm) apart on a flat rectangular panel, and be firmly fixed to a structure of the vehicle that remains undisturbed by the crash, such as the vehicle roof. The panel must be in the same plane as the plane of motion. The setup rotation of the panel within the motion plane is unimportant. To ensure against unexpected displacements of the car top, the backup moving reference targets C1 and C2 should also be attached to undisturbed portions of the vehicle, such as the vehicle door or body, and must also be 24 inches (609.6mm) apart.

B. 1-inch wide checkerboard tape should be applied down the center of the vehicle, including top of hood, roof, and deck lid. Also apply tape down both sides of vehicle approximately 4 inches above wheel opening.

C. Photographic targets should be placed at 12” intervals along the side of the vehicle along the 1-inch tape. Target placement should be documented.

D. Stadia poles or similar fixed ground reference targets are to be positioned vertically from the roadway surface on the driver and passenger sides of the vehicle (in the camera view, and at about door midpoint), to assist in high speed video evaluation of the event.

E. The dummies shall have targets on each side of the head with the center of the target as close as possible to the center of gravity of the head in the x and z direction (relative to the measuring directions of the accelerometers). Targets shall be placed on the outboard shoulder of each dummy. Cut away a section of the sleeve (do not remove the sleeve) of the dummy and place the target as high up on the arm as possible at the intersection of the arm and the shoulder.

F. The top portion of the steering wheel shall have tape with 1-inch squares (the squares having alternating colors such as black and yellow) placed on it.

9.6 TARGET VEHICLE INFORMATION PLACARDS

Vehicle identification placards shall be positioned so that at least 1 placard will be visible in the field-of-view for each of the high speed cameras. The following information will be shown:

Vehicle's NHTSA Number
The words “NCAP 35 MPH FRONTAL”
Date of crash test
Vehicle year, make and model

NOTE: The name of the test laboratory should not be present on any vehicle placards used in photos and videos submitted to NHTSA.

9.7 DOCUMENTATION VIDEO TITLE AND SEQUENCE

The pre-and post-test real-time documentation video shall include the following title frames:

A. "The following 35 mph frontal barrier impact test was conducted under contract with the National Highway Traffic Safety Administration by (name and location of test laboratory)"

35 MPH FRONTAL BARRIER IMPACT TEST
TEST VEHICLE MODEL YEAR, MAKE AND MODEL
NHTSA No. CXXXXX
DATE OF IMPACT EVENT
CONTRACT NO.: DTNH22-9X-X-XXXXX

B. The ending frame shall state "THE END"

9.8 DOCUMENTATION VIDEO RECORDING AND EDITING

The video shall be recorded and edited in the following sequence:

A. Title
B. Pre-test Coverage (at barrier)
    a. Left side of vehicle (pan from front to rear of vehicle)
    b. Right side of vehicle (pan from front to rear of vehicle)
    c. View of gas cap being removed and correctly replaced
    d. Left side view of vehicle interior and driver dummy (with vehicle door open)
    e. Right side view of vehicle interior and passenger dummy (with vehicle door open)
    f. Frontal view looking through windshield at both dummies
    g. Cycling of airbag indicator light
    h. Door closings
C. Real-Time Pan Coverage
D. Post test Coverage
    a. Left side of vehicle (pan from front to rear of vehicle, including footage of vehicle's front end damage)
    b. Driver dummy post-test positioning (close up with door closed)
    c. Right side of vehicle (pan from front to rear of vehicle, including footage of vehicle's front end damage)
    d. Passenger dummy post-test positioning (close up with door closed)
    e. Frontal view looking through windshield at both dummies
    f. Left side view of vehicle interior and driver dummy (as technician opens vehicle door)
    g. Right side view of vehicle interior and passenger dummy (as technician opens vehicle door)

E. Rotating Fixture Coverage (a minimum 10 seconds "burst" during 0 to 90 degree roll)
   a. View of Rollover – 0 degrees
   b. View of Rollover – 90 degrees
   c. View of Rollover – 180 degrees
   d. View of Rollover – 270 degrees
   e. View of Rollover – 360 degrees
F. If applicable, any fuel system, windshield, seat back, or other vehicle failures or testing anomalies. If the contractor has concerns about whether a test issue should be included, please contact the COTR.
G. "The End"

9.9 STILL PHOTOGRAPHS

Clear and properly focused digital still photographs in .jpg format with a minimum dots-per-inch (DPI) of 180 shall be taken to document the test. A target vehicle information placard, identifying the test vehicle model as well as the NHTSA number, along with an indication of whether the photo was taken pre-test or post-test, shall appear in each photograph and be legible A time/date stamp on each photo is also highly recommended. Each photograph shall also be labeled when transferred to the FTP site as part of the QuickLook data. In addition, the photos should be labeled in **Appendix A** of the final test report and on the final CD provided to NCAP. A list of photographs with their labeling convention can be found in **Section 3** of **Appendix N**.

10. DEFINITIONS

The contractor shall check the Code of Federal Regulations for the most recent definitions. A citation is provided after each definition not specified in Standard 208.

A. **Automatic-locking retractor:** A retractor incorporating adjustment hardware by means of a positive self-locking mechanism which is capable when locked of withstanding restraint forces. (571.209, S3)
B. **Designated seating capacity:** The number of designated seating positions provided. (571.3)
C. **Designated seating positions:** Any plan view location capable of accommodating a person at least as large as a 5th percentile adult female, if the overall seat configuration and design and vehicle design is such that the position is likely to be used as a seating position while the vehicle is in motion, except for auxiliary seating accommodations such as temporary or folding jump seats. Any bench or split-bench seat in a passenger car, truck or multipurpose passenger vehicle with a GVWR less than 4,586 kilograms (10,000 pounds), having greater than 127 centimeters (50 inches) of hip room (measured in accordance with SAE Standard J1100 (a)) shall nave not less than three seat designated seating positions, unless the set design or vehicle design is such that the center position cannot be used for seating. For the sole purpose of determining the classification of any vehicle sold or introduced into interstate commerce for purposes that include carrying students to and from school or related events, any location in such

vehicle intended for securement of an occupied wheelchair during vehicle operation shall be regarded as four designated seating positions. (571.3)

D. **Emergency-locking retractor:** A retractor incorporating adjustment hardware by means of a locking mechanism that is activated by vehicle acceleration, webbing movement relative to the vehicle, or other automatic action during an emergency and is capable when locked of withstanding restraint forces. (571.209, S3)

E. **Fixed Collision Barrier:** A flat, vertical, unyielding surface with the following characteristics:
   1. The surface is sufficiently large that when struck be a tested vehicle, no portion of the vehicle projects or passes beyond the surface,
   2. The approach is horizontal surface that is large enough for the vehicle to attain a stable attitude during its approach to the barrier, and that does not restrict vehicle motion during impact,
   3. When struck by a vehicle, the surface and its supporting structure absorb no significant portion of the vehicle's kinetic energy, so that a performance requirement described in terms of impact with a fixed collision barrier must be met no matter how small an amount of energy is absorbed by the barrier. (571.3)

F. **Fuel Spillage:** The fall, flow, or run of fuel from the vehicle but does not include wetness resulting from capillary action (571.301, S3)

G. **Gross axle weight rating or GAWR:** The value specified by the vehicle manufacturer as the load-carrying capacity of a single axle system as measured at the tire-ground interfaces (571.3)

H. **Gross vehicle weight rating or GVWR**: The value specified by the manufacturer as the loaded weight of a single vehicle. (571.3)

I. **H Point:** The mechanically hinged hip point of a manikin which simulates the actual pivot center of the human torso and thigh, described in SAE Recommended Practice J826, "Manikins for Use in Defining Vehicle Seating Accommodations," November 1962 (571.3)

J. **Longitudinal or longitudinally:** Parallel to the longitudinal centerline of the vehicle. (571.3)

K. **Outboard designated seating position:** A designated seating position where a longitudinal vertical plane tangent to the outboard side of the seat cushion is less than 12 inches from the innermost point on the inside surface of the vehicle at a height between the design H-point and the shoulder reference point (as shown in fig. 1 of Federal Motor Vehicle Safety Standard No. 210) and longitudinally between the front and rear edges of the seat cushion. (571.3)

L. **Overall vehicle width:** The nominal design dimension of the widest part of the vehicle, exclusive of signal lamps, marker lamps, outside rearview mirrors, flexible fender extensions, and mud flaps, determined with doors and windows closed and the wheels in the straight-ahead position. (571.3)

M. **Rated cargo and luggage capacity weight (RCLW):** RCLW = vehicle capacity weight – (68 kg x designated seating capacity) Maximum RCLW used in testing a truck, MPV, or bus is 136 kg.

N. **Seating reference point (SgRP):** The unique design H-point, as defined in SAE J1100 (June 1984), which:

1. Establishes the rearmost normal design driving or riding position of each designated seating position, which includes consideration of all modes of adjustment, horizontal, vertical, and tilt, in a vehicle;
2. Has X, Y, and Z coordinates, as defined in SAE J1100 (June 1984), established relative to the designed vehicle structure;
3. Simulates the position of the pivot center of the human torso and thigh; and
4. Is the reference point employed to position the two-dimensional drafting template with the 95th percentile leg described in SAE J826 (May 1987), or, if the drafting template with the 95th percentile leg cannot be positioned in the seating position, is located with the seat in its most rearward adjustment position. (571.3)

O. **Seat cushion reference point (SCRP):** A point placed on the outboard side of the seat cushion at a horizontal distance between 150 mm (5.9 in.) and 250 mm (9.8 in.) from the front edge of the seat used as a guide in positioning the seat.

P. **Seat cushion reference line (SCRL):** A line on the side of the seat cushion, passing through the seat cushion reference point, whose projection in the vehicle vertical longitudinal plane is straight and has a known angle with respect to the horizontal.

Q. **Telltale:** A display that indicates the actuation of a device, a correct or defective functioning or condition, or a failure to function. (571.101, S4)

R. **Type 1 seat belt assembly:** A lap belt for pelvic restraint (571.209 S3)

S. **Type 2 seat belt assembly:** A combination of pelvic and upper torso restraints (571.209 S3)

T. **Unloaded vehicle weight:** The weight of a vehicle with maximum capacity of all fluids necessary for operation of the vehicle, but without cargo, occupants, or accessories that are ordinarily removed from the vehicle when they are not in use. (571.3)

U. **Vehicle capacity weight:** The rated cargo and luggage load plus 68 kilograms times the vehicle's designated seating capacity. (571.110, S3)

V. **Vehicle fuel tank capacity:** The tank's unusable capacity (i.e., the volume of fuel left at the bottom of the tank when the vehicle's fuel pump can no longer draw fuel from the tank) plus its usable capacity (i.e., the volume of the fuel that can be pumped into the tank through the filler pipe with the vehicle on a level surface and with the unusable capacity already in the tank).The term does not include the vapor volume of the tank (i.e., the space above the fuel tank filler neck) nor the volume of the fuel tank filler neck. (571.3)

W. **Windshield trim:** Molding of any material between the windshield glazing and the exterior roof surface, including material that covers a part of either the windshield glazing or exterior roof surface. (571.216, S3)

11. TEST EXECUTION

11.1 TEST VEHICLE PREPARATION

A. TEST VEHICLE INFORMATION

Using the owner's manual, certification labels, information provided by the COTR and any other data available, determine the following vehicle information and record on the

applicable data sheet.

1. Model Year, make, model and body style
2. Body Color and VIN
3. NHTSA No. (supplied by COTR)
4. Build date (or month and year of manufacture)
5. Engine data – Number of cylinders, displacement (CID, liters or cc) and placement (longitudinal or lateral)
6. Transmission Data – Number of speeds, manual or automatic and whether it is equipped with overdrive
7. Final Drive – rear, front or four-wheel drive
8. Current odometer reading
9. Safety Restraints – List and describe all available front occupant restraints
10. Options – List major options

B. TIRE DATA RECORDED FROM FMVSS 110 VEHICLE PLACARD OR OPTIONAL TIRE INFLATION PRESSURE LABEL

Record the following information onto the applicable data sheet:

1. Recommended tire size
2. Recommended cold tire pressure
3. Number of occupants
4. Vehicle Capacity Weight (VCW)

C. DATA RECORDED FROM TIRE SIDEWALL

Record the following information onto the applicable data sheet:

1. Size of tires (Verify that the tire size(s) meet the manufacturer's specification as listed on the vehicle placard or optional tire label.)
2. Tire Manufacturer
3. Tire Pressure for maximum load carrying capacity (Verify that this pressure exceeds or is equal to the recommended cold tire pressure listed on the vehicle placard.)
4. Treadwear, traction, and temperature ratings

D. SEAT TYPE

Record the following information onto the applicable data sheet. Visually inspect the seat to verify seat type.

1. Type of front seat – bucket, bench, or split bench
2. Type of front seat back – fixed or adjustable with lever or knob
3. Type of rear seat – bucket, bench or split bench
4. Type of rear seat back – fixed or adjustable with lever or knob

E. VEHICLE ACCELEROMETERS

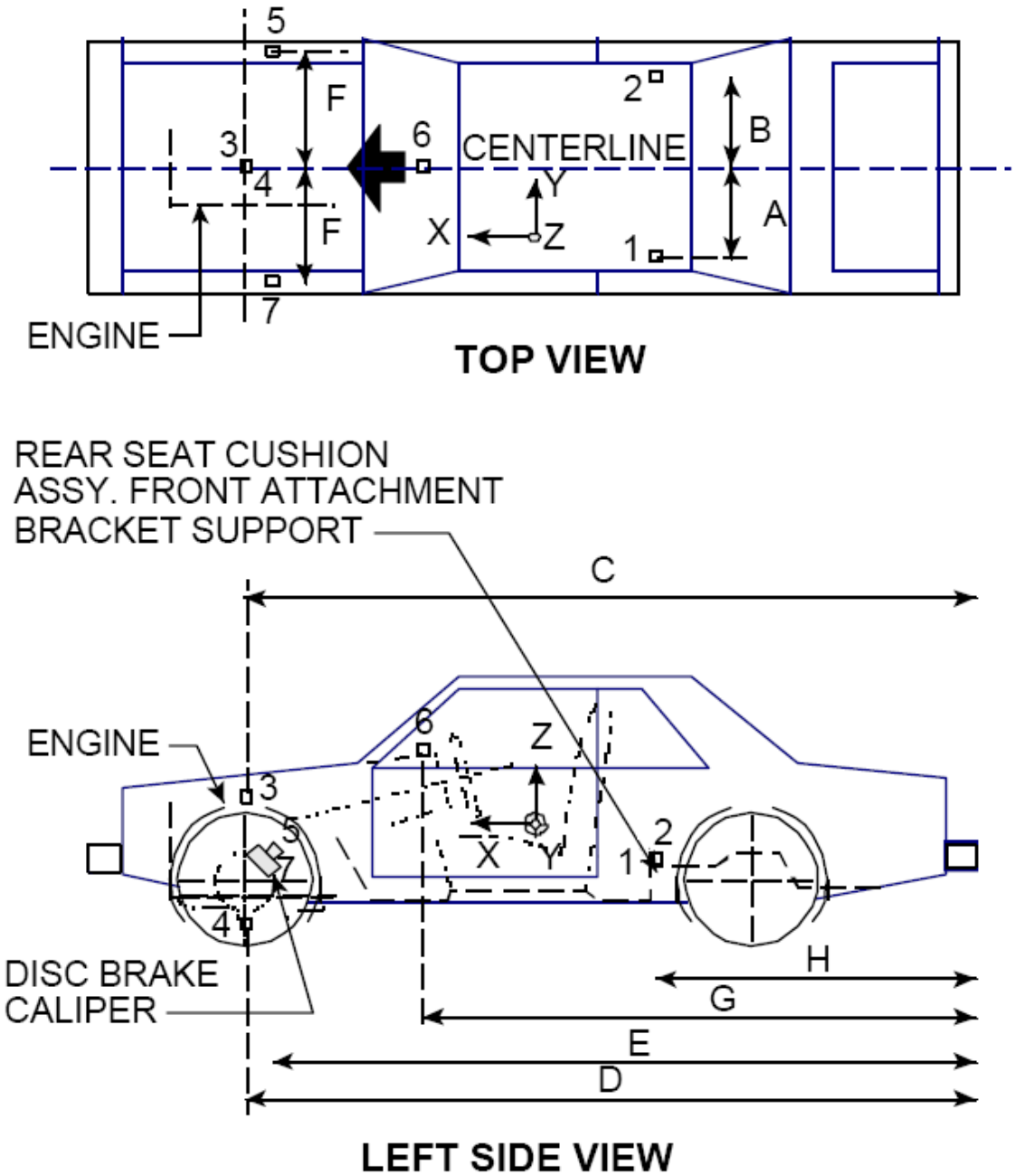

Figure 5 - Vehicle Accelerometer Locations

F. Place the following accelerometers in the test vehicle according to Figure 5. Record coordinates and accelerometer responses on the applicable data sheet.

1. **Left Rear Seat Crossmember:** Accelerometers mounted on the left rear seat

crossmember to measure Ax, redundant Ax, and Az.

2. **Right Rear Seat Crossmember:** Accelerometers mounted on the right rear seat crossmember to measure Ax, redundant Ax, and Az.

3. **Top of Engine:** One uniaxial accelerometer mounted on the top of the engine block to measure Ax.

4. **Bottom of Engine:** One uniaxial accelerometer mounted on the bottom of the engine block to measure Ax.

5. **Right Front Disc Brake Caliper:** Not currently collected.

6. **Center of Instrument Panel:** Not currently collected

7. **Left Front Disc Brake Caliper:** Not currently collected

NOTE: *The location of the accelerometers as well as the acceleration versus time output shall be recorded and included in the final test report and tape/disk.*

G. **AS DELIVERED** VEHICLE WEIGHT CONDITION

1. Fill the transmission with transmission fluid to full capacity.
2. Drain fuel from vehicle.
3. Run the engine until fuel remaining in the fuel delivery system is used and the engine stops.
4. Record the useable fuel tank capacity supplied by the COTR.
5. Record the fuel tank capacity supplied by the owner's manual.
6. Using purple dyed Stoddard solvent having the physical and chemical properties of Type 1 solvent or cleaning fluid, Table 1, ASTM Standard D484-71, "Standard Specifications for Hydrocarbon Dry-cleaning Solvents," or gasoline, fill the fuel tank. Record the amount.

   NOTE: *Stoddard solvent shall be free of debris. It is considered debris-free only if, upon filtering with a 10 micron filter, no solid debris is retained on the filter media or in any conduit, container or vessel upstream from the filter paper (e.g. debris is not allowed to be present in the funnel, pump, or container.). The solvent used for NHTSA testing must be designated for NHTSA testing only.*

7. Fill the coolant system to capacity.
8. Fill the engine with motor oil to the max. mark on the dip stick.
9. Fill the brake reservoir with brake fluid to its normal level.
10. Fill the windshield washer reservoir to capacity.
11. Inflate the tires to the cold tire pressure indicated on the tire placard. If no tire

placard is available, inflate the tires to the recommended pressure in the owner's manual. Record on the applicable data sheet.

12. Record the vehicle weight at each wheel to determine the **As Delivered** or **Unloaded Vehicle Weight (UVW)** condition, which is found by totaling the weight recorded at each of the four wheels.

H. VEHICLE ATTITUDE MEASUREMENTS – **AS DELIVERED or UVW**

1. With the vehicle in the **As Delivered/UVW** weight condition, place it on a flat, level surface.
2. Mark a point on each vehicle body above the center of each wheel.
3. Measure the perpendicular distance from the level surface to the four (4) points marked on the vehicle and record each.

I. CALCULATION OF VEHICLE TARGET TEST WEIGHT

1. Calculate the **Rated Cargo and Luggage Weight (RCLW)** as follows:

RCLW = VCW – (68.04 kg x DSC)

2. Record **VCW** on the data sheet, where **VCW =** Vehicle capacity weight from the vehicle placard.
3. Record the **DSC** on the data sheet, where **DSC =** Designated seating capacity as indicated on the vehicle placard.
4. Record **RCLW** on the applicable data sheet. **FOR TRUCKS, MPVs, OR BUSES – If the RCLW calculated above is greater than 136 kg, use 136 kg as the RCLW.**
5. Calculate the **Test Vehicle Target Weight** by adding the **As Delivered** weight, the **RCLW**, and the total actual weight of the dummies. Record on the applicable data sheet.

J. **FULLY LOADED** VEHICLE WEIGHT CONDITION

1. With the vehicle in the **As Delivered/UVW** condition, load the vehicle with the RCLW placed in the luggage or load-carrying/cargo area. Center the load over the longitudinal centerline of the vehicle.
2. Place the weight of the dummies in the appropriate front outboard seating positions.
3. Record the vehicle weight at each wheel to determine the **Fully Loaded** weight.

K. VEHICLE ATTITUDE MEASUREMENTS – **FULLY LOADED** WEIGHT CONDITION

1. With the vehicle in the **Fully Loaded** weight condition, place it on a flat, level surface.
2. Measure the perpendicular distance from the level surface to the four (4) points previously marked on the vehicle and record each.

L. **AS TESTED** VEHICLE WEIGHT CONDITION

1. With the test vehicle in the **Fully Loaded** test weight condition, drain the fuel system and operate the engine until the fuel system is dry.

   NOTE: *The removal process must prevent solvent contact with substances which may be soluble in the Stoddard solvent. (i.e. undercoating, paints used for identifying under-vehicle components, etc.).*

2. Slowly refill the entire fuel system with Stoddard solvent which has been dyed purple, having the physical and chemical properties of Type 1 solvent or cleaning fluid, Table 1, ASTM Standard D484-71, "Standard Specifications for Hydrocarbon Dry-cleaning Solvents."
3. Fill the tank to 93 percent (± 1%) of usable capacity. Crank the engine to fill the fuel delivery system with Stoddard solvent.
4. Drain transmission fluid, engine coolant, motor oil, and windshield washer fluid from the test vehicle so that Stoddard solvent leakage from the fuel system will be evident.
5. Remove **RCLW** from the cargo area.
6. Load the vehicle with the appropriate dummies (if not already present) necessary onboard test equipment (including all instrumentation boxes, cameras, lighting, etc.) Secure the equipment in the load-carrying area and distribute it, as nearly possible, to obtain the proportion of axle weight indicated by the gross axle weight ratings and center it over the longitudinal centerline of the vehicle.
7. Calculate the **Target Vehicle Test Weight (TVTW)** range as follows:

   Calculated Weight = **As Delivered/UVW** + **RCLW** + (Total Weight of Dummies)

   Maximum Test Vehicle Target Weight (TVTW) = Calculated Weight - 4.5 kg
   Minimum Test Vehicle Target Weight (TVTW) = Calculated Weight - 9 kg

   The **As Tested** weight should fall as follows:

   TVTW-9.0kg ≤ **As Tested** weight ≤ TVTW-4.5kg

8. Record the vehicle weight at each wheel. Verify that the **As Tested** weight is within the range specified in (7). If necessary, to achieve the **As Tested** weight, adjust the weight of the test vehicle by either adding ballast or removing vehicle components in accordance with the manufacturer's data provided by the COTR.
9. On the data sheet, record the weight of the added ballast, if any.
10. On the data sheet, record the weight of each vehicle component that was removed.

    NOTE*:* *If the calculated* ***TEST VEHICLE TARGET WEIGHT (TVTW)*** *is exceeded, the Contractor should consult the vehicle setup information to determine which parts, if any, have been suggested for removal. The*

*Contractor **must** notify the COTR to confirm the removal of vehicle components. If no components were provided with the vehicle setup information, the Contractor must also contact the COTR for guidance about parts removal. Under no circumstances shall the **As Tested** weight be greater than the maximum **Test Vehicle Target Weigh**t.*

M. VEHICLE ATTITUDE MEASUREMENTS – **AS TESTED** WEIGHT CONDITION

1. With the vehicle in the **As Tested** weight condition, place it on a flat, level surface.
2. Measure the perpendicular distance from the level surface to the four (4) points previously marked on the vehicle and record each.

NOTE: *The **As Tested** vehicle attitude measurements shall be taken within an hour of impact to assure the proper attitude is met.*

N. SEAT ADJUSTMENT REFERENCE MARKS

Prior to placing the dummies in the front seating positions, consult **Appendix F** of this document for a check list pertaining to the proper procedures.

O. SETTING THE SEATS

Prior to setting the front seating positions, consult **Appendix F** of this document for a check list pertaining to the proper procedure.

P. ADJUSTABLE HEAD RESTRAINTS

Prior to adjusting the head restraints, consult **Appendix F** of this document for a check list pertaining to the proper procedure.

Q. STEERING WHEEL ADJUSTMENT

Consult **Appendix F** of this document for a check list pertaining to the proper procedure for adjusting the steering wheel.

R. ADJUSTABLE ARMRESTS

Place any adjustable armrest in the retracted position.

S. ADJUSTABLE BELT ANCHORAGES

1. **50th Male Dummy** – Place adjustable anchorages in the nominal adjustment position in accordance with the manufacturer's data supplied by the COTR.

2. **5th Female Dummy** – Place adjustable anchorages in the nominal adjustment

position in accordance with the manufacturer's data supplied by the COTR.

T. WINDOWS

1. Place driver and passenger front windows in the fully open position. Place all other windows and vents in the fully closed position unless otherwise specified by the COTR.
2. The windshield mounting material and all vehicle components in direct contact with the mounting material must be at a temperature between 15°F and 110°F. This temperature measurement must be made within 15 minutes of the impact test event.
3. Adjustable cowl tops or other adjustable panels in front of the windshield are in the position used under normal operation during inclement weather.

U. SUNROOF

Place sunroof(s) in the full closed position.

V. DOOR LOCKS

Vehicles without automatic door locks should remain unlocked during the event. If the vehicle has automatic door locks (ADLs), they will also remain unlocked UNLESS the equipment is standard **and** the dealer is the only entity that can deactivate the system.

NOTE: If there are any instructions in the owner's manual describing how a consumer may deactivate the ADLs, the vehicle *must be left unlocked* during the event.

W. CONVERTIBLE TOPS

Place convertible tops in the closed passenger compartment configuration.

X. DOORS

1. Place all doors, hatchback or tailgate, in the fully closed and latched position. Check instrument panel telltales just prior to ensure than all doors and hatches are closed. Do not lock any door, hatchback, or tailgate.
2. Before performing the act of door closing, knowledge of the door configuration and operation must be acquired (from test vehicle preparation data submitted by vehicle manufacturer). Particular care must be exercised to close doors with 2-stage (primary and secondary) latch systems.
3. Confirm that all doors are properly closed by checking indicators in vehicle instrument panel if so equipped. Also, as indicated in Section 9.7 of this document, a full documentation of door closings with a real-time camera should be included as part of the documentation movie.

Y. TRANSMISSION ENGAGEMENT

1. **Manual Transmission –** Place manual transmissions in neutral.
2. **Automatic Transmission –** Place automatic transmissions in neutral.

Z. PARKING BRAKE DISENGAGEMENT

Disengage the parking brake.

AA. IGNITION SWITCH

The key shall be in the ignition and switched to the "ON" position. Check to ensure that the "Airbag Readiness Indicator" shows the airbag system as being functional.

BB. LAP AND SHOULDER BELT LOAD CELLS

1. Load cells, if allowed by the vehicle manufacturer per the provided Form 1, shall be mounted on the front outboard lap and shoulder belts (4 load cell units required). Attachment of load cells shall not affect seat belt positioning or function in any way.
2. **Lap Belt Units**: The lap belt load cells shall be positioned on the belt webbing so as to avoid contact with any objects other than the lap belt to which they are attached.
3. **Shoulder Belt Units:** The shoulder belt load cells shall be mounted immediately behind the dummy's outboard shoulder according to the distance provided by the COTR via the vehicle's setup information (Form1) such that during the frontal crash test, they do not come in contact with anything other than the belt to which they are attached.
4. Each load cell shall be suspended by a support such as masking tape so that the weight of the load cell does not introduce any slack into the belt system as the test vehicle travels down the tow road. The tape should be strong enough to carry the load cell's weight, but not strong enough to affect belt stretch or loading. Normally, if 1-inch wide tape is used, a tear across the tape approximately ¾-inch long at the center suspension point between the load cell and the vehicle's inner roof rail will be sufficient to ensure that an immediate break-away condition will exist at the moment of barrier impact.

NOTE: *If a mounting distance from the D-ring is not provided along with the vehicle setup information (Form 1), contact the COTR for instructions on whether or not to run the test with any shoulder belt load cells.*

11.2 TEST DUMMY PREPARATION, POSITIONING, AND PLACEMENT

A. Place a properly clothed and calibrated 50th percentile male (in accordance with **Appendix A**) and a properly clothed and calibrated 5th percentile female (in accordance with **Appendix B**) in the front outboard seating positions in accordance with **Appendix F**, "DRIVER AND PASSENGER DUMMY SEATING AND POSITIONING

PROCEDURES."

B. Document the final positions of the dummy after it is seated in the test vehicle by taking the following measurements (accurate to ±3 mm). Record measurements on the applicable data sheet.

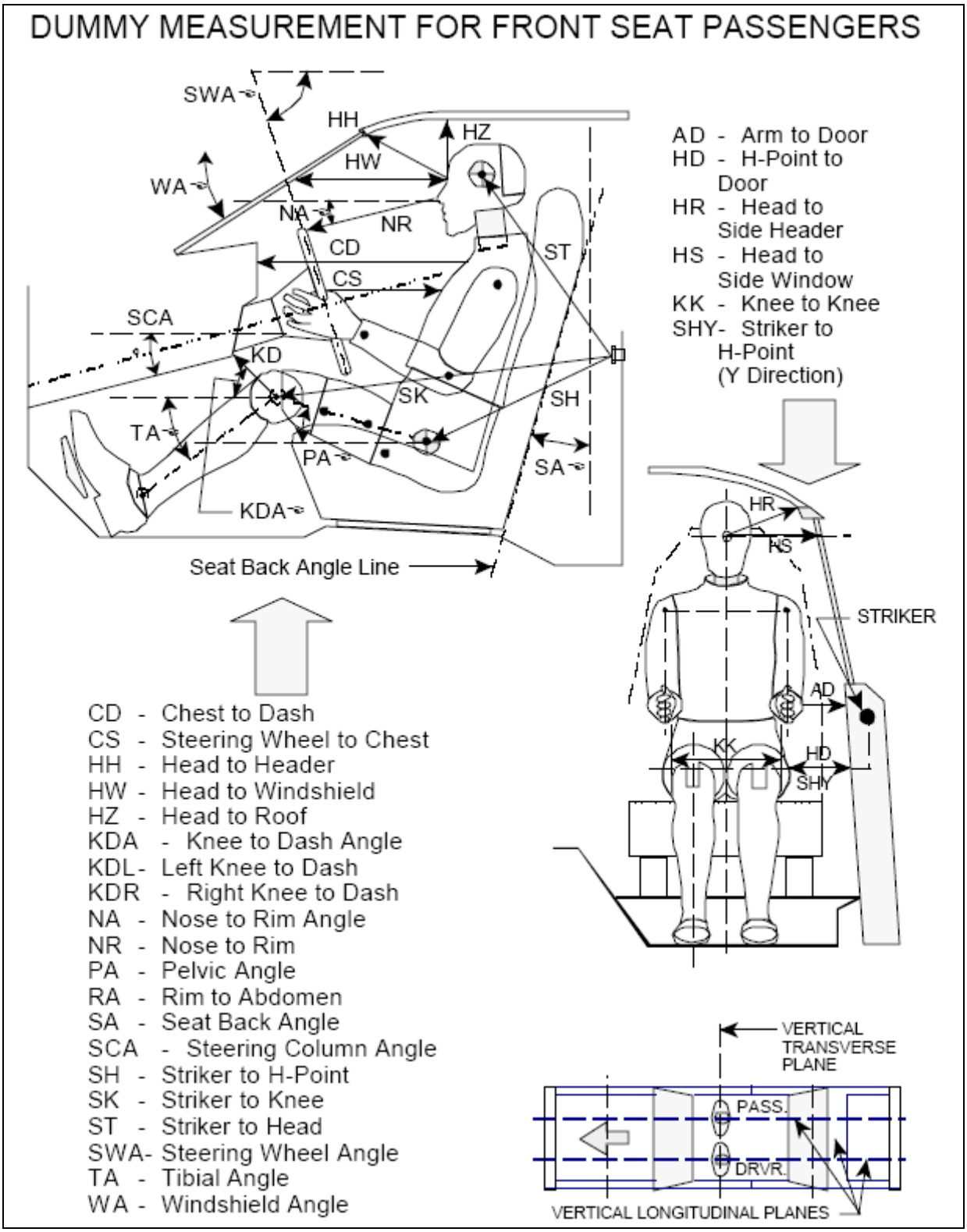

Figure 6 - Dummy Measurements for Front Seat Passengers

C. DUMMY LONGITUDINAL CLEARANCE DIMENSIONS (see **Figure 6** and any additional diagrams that may be included)

The following measurements are to be made within a vertical longitudinal plane:

1. **HH - Head to Header** - Taken from the point where the dummy's nose meets his forehead (between his eyes) to the furthest point forward on the header.
2. **HW - Head to Windshield** - Taken from the point where the dummy's nose meets his forehead (between his eyes) to a point on the windshield. Use a level.
3. **HZ - Head to Roof** - Taken from the point where the dummy's nose meets his forehead (between his eyes) to the point on the roof directly above it. Use a level.
4. **CS- Steering Wheel to Chest** - Taken from the center of the steering wheel hub to the dummy's chest. Use a level.
5. **CD - Chest to Dash** - Place a tape measure on the tip of the dummy's chin and rotate five inches of it downward toward the dummy to the point of contact on the transverse center of the dummy's chest. Measure from this point to the closest point on the dashboard either between the upper part of the steering wheel between the hub and the rim, or measure to the dashboard placing the tape measure above the rim, whichever is a shorter measurement.

i. CD, Chest to Dash, 1

ii. CD, Chest to Dash, 2

6. **RA - Steering Wheel Rim to Abdomen** - Taken from the bottommost point of the steering wheel rim horizontally rearward to the dummy. Use a level.
7. **NR - Nose to Rim** - Taken from the tip of the dummy's nose to the closest point on the top of the steering wheel rim. Also indicate the angle this line makes with respect to the horizontal, the **Nose to Rim Angle, NA** (see below).
8. **KDL, KDR - Left and Right Knees to Dashboard***[1] - Taken from the center of the knee pivot bolt's outer surface to the closest point forward acquired by swinging the tape measure in continually larger arcs until it contacts the dashboard. Also reference the angle of this measurement with respect to the horizontal for the outboard **Knee to Dash Angle, KDA**.

iii. KDL/KDR, Knee to Dash Left, Right

9. **<u>SH, SK, ST - Striker to H-Point, Knee, and Head</u> -** These measurements are to be taken in the X-Z plane measured from the forward most center point on the striker to the center of the H-point, outer knee bolt, and head target. When taking this measurement a firm device that can be rigidly connected to the striker should be used. Use a level. The angles of these measurements with respect to the horizontal should also be recorded. The measurement in the Y (transverse) direction from the striker to the H-point, designated **<u>Striker to H-Point, SHY</u>** (see below) should also be taken.

iv. SH, Striker to H-Point, 1

v. SH, Striker to H-Point, 2

vi. SK, Striker to Knee, 1

vii. ST, Striker to Knee, 2

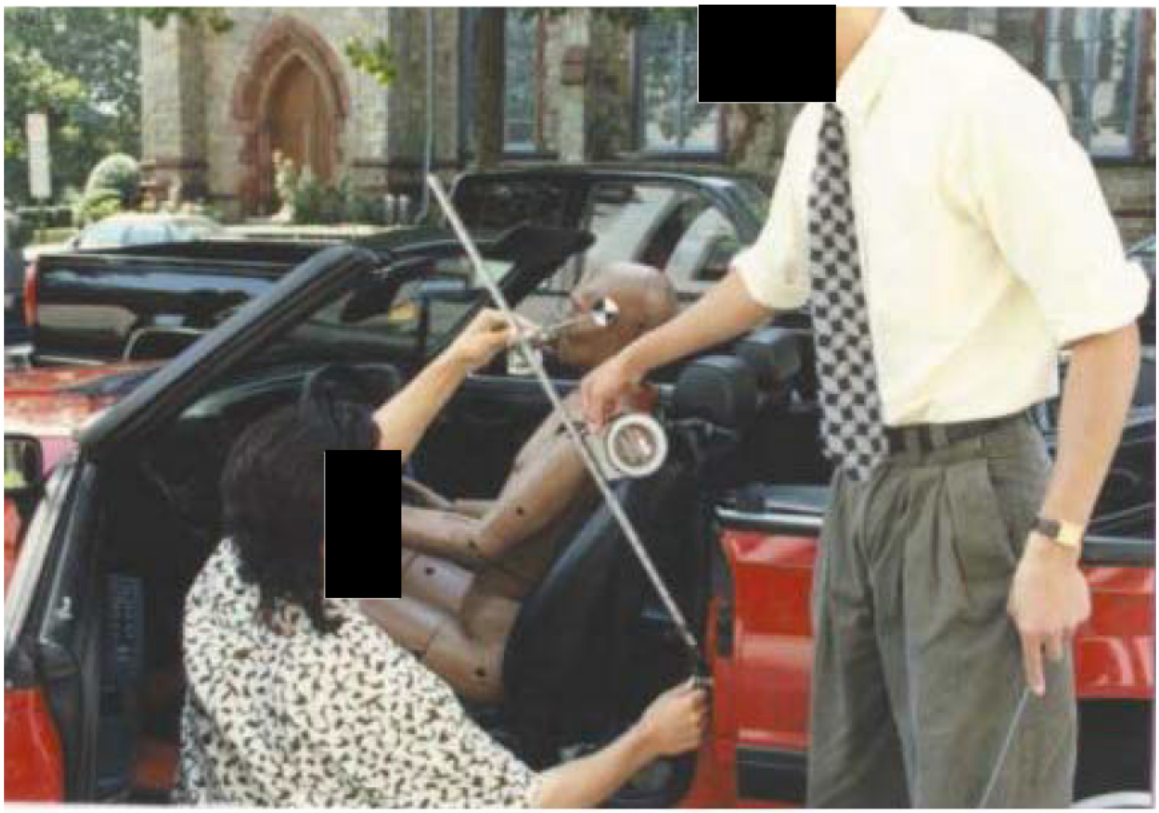

viii. ST, Striker to Head

The following measurements are to be made within a vertical transverse plane:

1. **<u>HS - Head to Side Window</u>** - Taken from the point where the dummy's nose meets his forehead (between his eyes) to the outside of the side window. In order to make this measurement, roll the window down to the exact height that allows a level measurement. Use a level.

ix. HS, Header to Side Window

2. **<u>AD - Arm to Door</u>** -Taken from the outer surface of the elbow pivot bolt on a Hybrid II dummy to the first point it hits on the door. In the case of a Hybrid III dummy, measure from the bolt on the outer biceps. When a SID is used make the measurement from the center of the bottom of the arm segment where it meets the dummy's torso.
3. **<u>HD - H-point to Door</u>**, taken from the H-point on the dummy to the closest point on the door. Use a level.
4. **<u>HR - Head to Side Header</u>**, measure the shortest distance from the point where the dummy's nose meets his forehead (between his eyes) to the side edge of the header just above the window frame, directly adjacent to the dummy.
5. **<u>SHY - Striker to H-point</u>** - Taken from a rod rigidly connected to the forward most center point on the striker to the H-point. Use a level.

x. SHY, Striker to H-Point Y-Direction

6. **KK - Knee to Knee** - For Hybrid III dummies measure the distance between the outboard knee clevis flange surfaces. (This measurement may not be exactly transverse)

The following angles are to be measured and recorded:

1. **SA - Seat Back Angle** - Find this angle using the instructions provided by the COTR via the manufacturer. If the manufacturer instructions aren't clear enough contact the COTR.
2. **PA - Pelvic or Femur Angle** - Taken by inserting the pelvic angle gauge into the H-point gauging hole on the Hybrid III dummies and taking this angle with respect to the horizontal.
3. **SWA - Steering Wheel Angle** - Find this angle by placing a straight edge against the steering wheel rim along the longitudinal plane. Then measure the acute angle of the straight edge with respect to the horizontal.
4. **SCA - Steering Column Angle** - measured with respect to the horizontal by placing an inclinometer on the center of the underside of the steering column.
5. **NA - Nose to Rim Angle** - Measure the angle made when taking the measurement NR with respect to the horizontal.
6. **KDA - Knee to Dash Angle** – Measure the angle that KD is taken at with respect to the horizontal. Only get this angle for the outboard knee.

xi. KDA, Knee to Dash Angle

7. **<u>WA - Windshield Angle</u> -** Place an inclinometer along the transverse center of the windshield exterior (measurement is made with respect to horizontal).
8. **<u>TA - Tibia Angle</u> -** Use a straight edge to connect the dummy's knee and ankle bolts. Then place an inclinometer on the straight edge and measure the angle with respect to the horizontal.

D. All dummy joints should be inspected for mobility prior to each crash test and reset to hold 1G. This amount of friction will just barely restrain the weight of the individual limb when it is extended horizontally.

TEST DUMMIES SHOULD BE PLACED IN THE TEST VEHICLE ON THE MORNING OF TEST DAY. DO NOT PLACE THE DUMMIES IN THE VEHICLE THE DAY BEFORE TESTING FOR OVERNIGHT STORAGE.

E. The final positions of the driver and passenger dummies shall be recorded using the appropriate final report data sheet, and the occupant clearances to vehicle interior surfaces dimensions shall be recorded on a separate data sheet.

F. The dummy calibration procedures are attached as **Appendices A and B.** The calibration data for each dummy used in a vehicle barrier impact test shall be submitted in the preliminary and final test reports. Dummies shall be calibrated before and after every NCAP test. Each calibration should be available electronically (in ASCII format) to the COTR if requested. The post-test calibration obtained after the previous test can be used as the pre-test calibration for a subsequent test as long as the dummy will be used in a frontal test within 8 weeks of that calibration. In the event that a body region exceeds the performance standards required by FMVSS 208, that region on the ATD must be recalibrated. The calibrations and calibration check shall be submitted with the final report. All electronic data collected for all dummy calibrations must be saved and retained up to five years from the test date.

G. Dummy positioning procedures are detailed in **Appendix F.**

H. Manufacturer's representatives will be afforded the opportunity to take measurements of the dummies' positions after the dummy positioning procedures are complete. Any deviation from this procedure must be approved by the COTR.

I. It is recommended that dummies are rotated from one test to another. For example, if two 5th female dummies and two 50th male dummies have been furnished to the contractor for NCAP testing, the driver and passenger dummies from the previous test will become the auxiliary set. If more than two of each type of dummy is furnished to the contractor, they should be rotated in an analogous manner.

J. Document the final positions of the dummy after it is seated in the test vehicle by taking the following measurements (accurate to ± 3mm). Record measurements on the applicable data sheet.

11.3 LOAD CELL BARRIER PREPARATION

The fixed barrier shall be instrumented with load cells as seen in **Appendix P** or as per any barrier configuration provided to the contractor by NHTSA.

11.4 VEHICLE MEASUREMENTS

A. EXTERIOR VEHICLE MEASUREMENTS

1. Establish a fixed reference plane that is perpendicular to the vehicle's longitudinal centerline, as shown in **Figure 9)**
2. Prior to the test, with the vehicle in the "As Tested" configuration, measure and record the dimensions from the fixed reference plane as specified in the applicable data sheet.
3. Post-test, place the vehicle on a flat, level surface. Inflate the test vehicle's tires to maximum cold pressure found on tire placard.
4. Take the same measurements as in step 2. Record on the applicable data sheet.
5. Compute the difference between the measurements taken in steps 2 and 4 and record on the applicable data sheet.

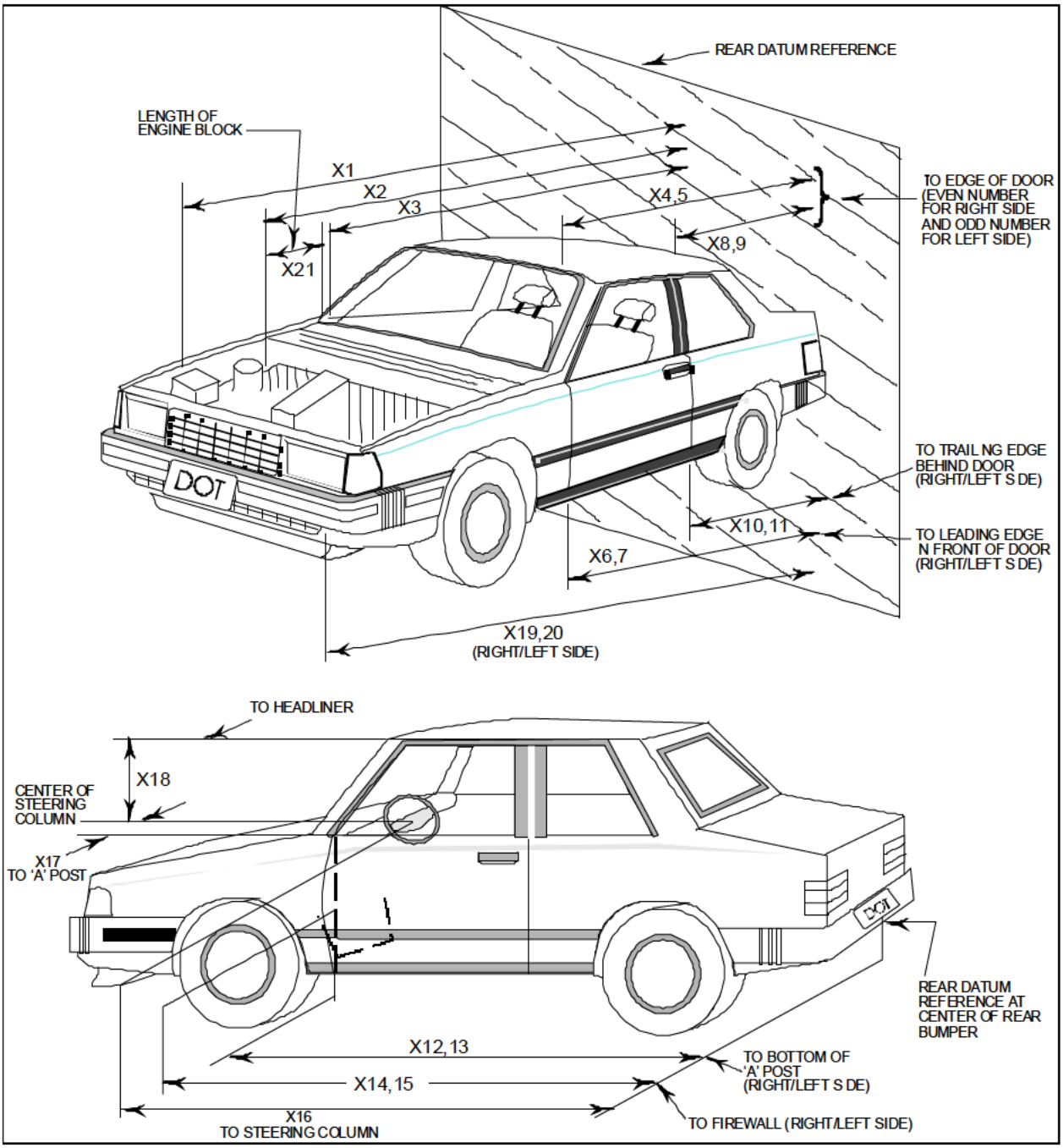

Figure 7 - Exterior Vehicle Measurements

B. VEHICLE INTRUSION MEASUREMENTS

1. Prior to the test, record the Door Opening Width, Wheelbase, and Driver Compartment measurements, as shown in **Figures 8** and 9 and on the applicable data sheets.
2. Post-test, repeat the measurements taken in step 1 and record on the data sheets.
3. Compute the difference between the measurements taken in steps 1 and 2. Record

these values on the applicable data sheets.

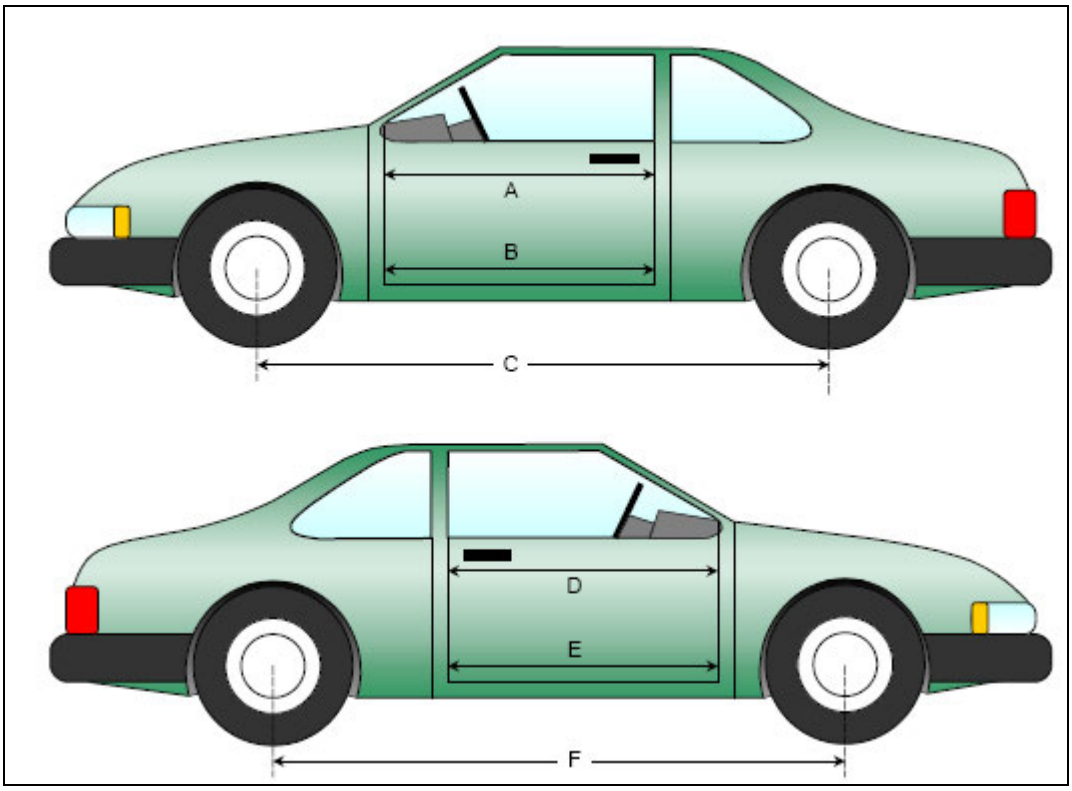

Figure 8 - Door Opening Width and Wheelbase Measurements

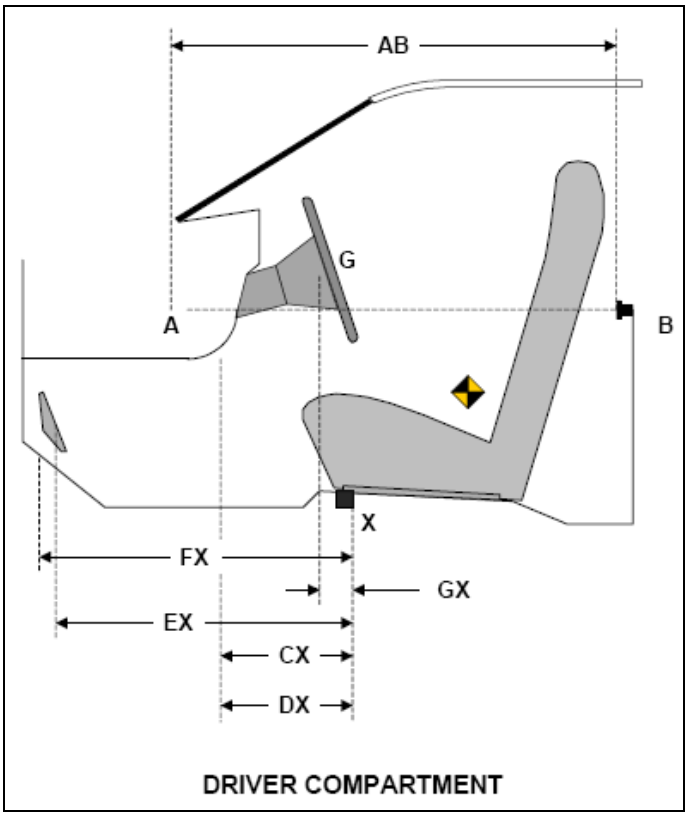

Figure 9 - Driver Compartment Measurements

C. VEHICLE CRUSH MEASUREMENTS

1. Prior to the test, record L and C1 through C6 as shown in **Figure 10** on the applicable data sheet. L is the damage width, which is found by taking the measurement from bumper corner to bumper corner. Points C1 through C6 can be found by dividing L by 5 equal lengths.
2. Post-test, repeat the measurements taken in step 1 and record.
3. Compute the difference between the measurements taken in steps 1 and 2. Record on the applicable data sheet.

NOTE: When computing the Collision Deformation Classification:
Flat frontal = 12FDEW**X,**

where the value for **X** is calculated by taking the longitudinal distance from the tip of the front of bumper to base of the windshield and dividing it into 5 equal zones, with Zone 1 beginning at the bumper. Whatever zone the maximum longitudinal crush reaches into is the number that is reported for **X**. Typically it will be zone "2", "3", or "4" in a frontal NCAP test.

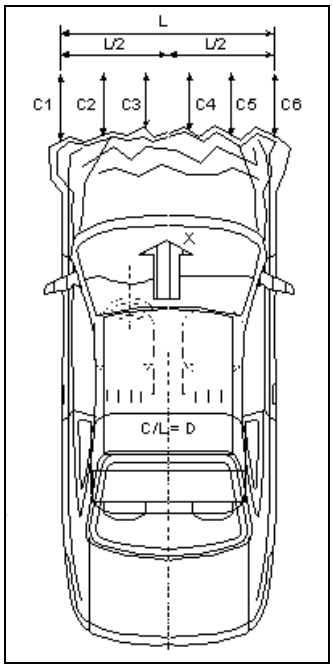

Figure 10 - Vehicle Crush Profile Measurements

D. FMVSS 301/305 STATIC ROLLOVER TESTING

Record the details from the FMVSS 301 static rollover fuel system integrity test on Data Sheets 15 and 16 in **Appendix N**. Electric vehicles evaluated under FMVSS 305 require the contractor to submit a test report under the separate "Laboratory Test Procedure for the New Car Assessment Program Indicant Test for FMVSS No. 305."

E. ELECTRONIC DATA RECORDER (EDR) REMOVAL

Immediately following the test, the contractor shall also remove the Event Data Recorder (EDR) for the vehicle using the information supplied on Form 1 by the vehicle manufacturer. The EDR shall be handled with care and labeled. It shall also be protected from the elements and retained by the test contractor until requested by the COTR.

11.5 ELECTROMAGNETIC INTERFERENCE

The laboratory shall take all necessary precautions to ensure electromagnetic interference with the test data does not occur. The following vehicle procedures shall be included in those adopted by the laboratory:

A. Ground the head, thorax, and both femurs of the anthropomorphic test devices. This is accomplished by connecting the four components with a wire. A single wire then exits the dummy and is attached to a grounding block on the vehicle. Connect the grounding block to earth ground. The actual wire size and connections are left to the laboratory based on the system it uses.

12. TEST DATA DISPOSITION

The Contractor shall make all crash test data available within two hours of the crash test event if so requested by NHTSA personnel. Under no circumstances shall this data be furnished to non-NHTSA personnel. The Contractor shall analyze the preliminary test results as directed by the COTR.

12.1 TEST DATA LOSS

A. INVALID TEST DESCRIPTION

The Part 572E and Part 572O test dummies and the test vehicle are instrumented in order to obtain data needed for the New Car Assessment Program (NCAP). The dummy data from 35 mph (56 km/h) frontal barrier impact tests for evaluation against FMVSS No. 208 injury criteria and the visual record of dummy kinematics are absolutely essential to NCAP. An invalid NCAP test is one which does not conform precisely to all requirements and/or specifications of the NCAP Laboratory Test Procedure and Statement of Work applicable to the test.

B. INVALID TEST NOTIFICATION

The Contractor shall notify NHTSA of any test not meeting all requirements and specifications of the NCAP Laboratory Test Procedure and Statement of Work applicable to the test, by telephone, within 24 hours of the test and send written notice to the COTR within 48 hours of the test completion.

C. RETEST NOTIFICATION

The COTR is the only NHTSA official authorized to notify the Contractor that a retest is required. The retest shall be completed within 2 weeks after receipt of notification by the COTR that a retest is required.

D. WAIVER OF RETEST

NHTSA, in its sole discretion, reserves the right to waive the retest requirement. This provision shall not constitute a basis for dispute over the NHTSA's waiving or not waiving any requirement.

E. TEST VEHICLE

NHTSA shall furnish only one vehicle for each test ordered. The Contractor shall furnish the test vehicle required for the retest if it is determined that the contractor is at fault. The retest vehicle shall be equipped as the original vehicle. The original vehicle used in the invalid test shall remain the property of NHSTA, and the retest vehicle shall remain

the property of the Contractor. The Contractor shall retain the retest vehicle for a period not exceeding 180 days if it fails any of the test criteria. If the retest vehicle passes the test, the Contractor may dispose of it upon notification from the COTR that the test report has been accepted.

RETEST CONDITIONS

FAILURE OF THE CONTRACTOR TO OBTAIN THE SPECIFIED DATA AND TO MAINTAIN ACCEPTABLE LIMITS OF TEST PARAMETERS IN THE MANNER OUTLINED IN THIS TEST PROCEDURE SHALL REQUIRE A RETEST AT THE EXPENSE OF THE CONTRACTOR AND SHALL INCLUDE THE COST OF THE VEHICLE REPLACEMENT AND RETEST AT THE CONTRACTOR'S EXPENSE. THE PROVISIONS OF THIS PARAGRAPH APPLY, BUT ARE NOT LIMITED TO, THE CONTRACTOR MAINTAINING PROPER SPEED TOLERANCE, VEHICLE SEAT CUSHION AND BACK POSITIONING, DUMMY POSITIONING, CORRECT LAP AND SHOULDER BELT POSITIONING, AND TEST DATA ACQUISITION, REDUCTION, AND PROCESSING.

THE CONTRACTOR SHALL ALSO BE RESPONSIBLE FOR OBTAINING USABLE DATA FROM ALL PRIMARY CHANNELS FROM EACH OF THE TWO PART 572 TEST DUMMIES PLACED IN EACH VEHICLE FRONT OUTBOARD DESIGNATED SEATING POSITION (DSP). FAILURE TO PRODUCE SUCH DATA SHALL ALSO BE AT THE EXPENSE OF THE CONTRACTOR AND SHALL INCLUDE VEHICLE REPLACEMENT AND RETEST. SHOULD IT BECOME NECESSARY FOR THE CONTRACTOR TO PROCURE ANOTHER TEST VEHICLE, IT MUST HAVE IDENTICAL EQUIPMENT AND OPTIONS AS THE ORIGINAL VEHICLE. THE ORIGINAL VEHICLE REMAINS THE PROPERTY OF NHTSA. THE RETESTED VEHICLE BECOMES THE PROPERTY OF THE CONTRACTOR. THE RETESTED VEHICLE SHALL BE RETAINED WITHOUT FEE BY THE TESTING FACILITY UNTIL ITS DISPOSAL IS AUTHORIZED BY THE COTR.

F. TEST REPORT

No test report is required for any test which is determined to be invalid unless NHTSA specifically decides, in writing, to require the Contractor to submit such report. The test data from the invalid test must be safeguarded until the data from the retest has been accepted by the COTR. The report and other required deliverables for the retest vehicle are required to be submitted to the COTR within 2 weeks after completion of the retest. Invalidated test reports will not be publicly released.

G. DEFAULT

The Contractor is subject to the default and subsequent re-procurement costs for non-delivery of valid or conforming tests (pursuant to the Termination for Default clause in the contract).

H. CONDITIONS FOR PARTIAL PAYMENT
The Contractor shall exercise reasonable and foreseeable control to insure that no data is lost or rendered useless. If some non-critical data (such as camera failure, etc.) and critical data (acceleration and load data) are not obtained for the crash test and the test is accepted by the Agency, the Agency will not pay for the missing or lost data.

12.2 DATA PROCESSING

NOTE: PARTS OF THE FOLLOWING MAY NOT APPLY TO ON-BOARD DATA ACQUISITION SYSTEMS.

A. Prior to the vehicle crash test, a null reference and a shunt calibration adjustment are performed to set all analog and direct digitized data devices including FM magnetic tape recorders. Immediately following the crash test, a post impact null reference and shunt calibration check will be performed. The pre and post-test zero and shunt calibration check will be recorded and the data submitted with the report as shown below:

CHANNEL DESCRIPTION	**S/N**	**DLR**	**UNITS**	**PRE-ZERO**	**PRE-CAL**	**POST-ZERO**	**POST-CAL**
Head x	123abc	106.1	G's	0.045	2.202	0.045	2.203
Head y							

B. As a secondary instrumentation check, it is suggested that just prior to vehicle testing, accelerometers and onboard signal conditioning equipment be lightly tapped with a rubber mallet to ensure that sensors are recording, and that instrumentation connections are secure.

C. Prior to initiation of the testing program and periodically thereafter, on-board equipment should be drop-tested and performance checked at G levels expected in the NCAP testing. The equipment should be sufficiently shock hardened to function in the adverse environment. In addition, it is recommended that on a periodic basis, the instrumentation be energized with the sensors removed from the system. The system should then be subjected to a shock equivalent to that in the crash test event. The output voltages should remain stable confirming system integrity.

D. A precision time system compatible with the test equipment shall be used to provide a time reference for all recorded data. A system that identifies the precise instant of barrier contact will be incorporated with the time reference signal. An instrumentation self-checking system that simultaneously monitors all data channels and displays, on a single indicator, will provide the GO/NO-GO status of the sensor system.

E. Test data should NOT be pre-filtered and should be submitted at a class that is higher

than Class 1000. It should be digitized at a minimum rate of 10,000 samples per second. Additionally, the data should be truncated at 300 ms. The data is then placed onto permanent storage media after the application of appropriate calibration scale factors.

F. As the data is recalled for integration or plotting, the appropriate filter is applied. These filters are in accordance with the most recent version of SAE Recommended Practice J211-1 “Instrumentation for Impact Tests.” Vehicle acceleration data is plotted after the application of an SAE Class 60 filter, and velocity and displacement data is plotted after the application of an SAE Class 180 filter.

G. Before plotting, the Contractor's program manager or engineer shall determine the “time zero”, which is verified with the trigger signal. When a velocity or displacement trace is to be plotted, integration for the appropriate acceleration signal is performed digitally.

H. Time zero bias should be removed prior to submission of the data tape to NHTSA.

I. Reported injury measures in test report shall be made in accordance with ASTM E29-06b, “Standard Practice for Using Significant Digits in Test Data to Determine Conformance with Specifications.”

J. FILTERING REQUIREMENTS:

	Filter Class	Cut-off Frequency
Head Acceleration	1000	1650
Neck Forces	1000	1650
Pelvic Acceleration	1000	1650
Foot Acceleration	1000	1650
Chest Acceleration	180	300
Chest Compression	600	1000
Femur Forces	600	1000
Neck Moments	600	1000
Tibia Forces	600	1000
Tibia Moment	600	1000
Nij	600	1000
Vehicle Acceleration	60	100
Load Cell Barrier Loads	60	100
Seat Belt Loads	60	100

K. As stated previously, the minimum sampling rate requirement is 10,000 samples per second per channel. The Contractor must meet all the requirements in the NHTSA "Data Tape Reference Guide" which is available from the following organization:

U.S. Department of Transportation
National Highway Traffic Safety Administration
Office of Crashworthiness Standards
1200 New Jersey Ave SE
Washington, DC 20590

L. Or search NHTSA's website for the most updated version of the Data Tape Reference Guide. Visit http://www-nrd.nhtsa.dot.gov/ and click on "R&D Software." Under "NVS Software Applications," click "NHTSA Test Reference Guides" and select the latest version of Volume I: Vehicle Tests.

M. Algorithms that are used to calculate the HIC, Nij, 3 millisecond clips of a waveform, and to digitally filter the Class 1000 data collected from the tests, are on the NHTSA web site (www.nhtsa.dot.gov).

Any questions pertaining to the algorithms should be directed to the following organization:

National Highway Traffic Safety Administration
Office of Crashworthiness Research
Safety Systems Engineering and Analysis Division
1200 New Jersey Ave. SE
Mail Code: NVS-321
Washington, DC 20590
Telephone No.: 202-366 4850

12.3 RECOMMENDED DATA TRACE ORDER

To ensure uniformity in data tape formatting, the following curve order is required:

DRIVER TRACES
Head x ,y ,z Acceleration Primary
Head x ,y ,z Acceleration Redundant
Neck x, y, z Force
Neck x, y, z Moment
Chest x ,y ,z Acceleration Primary
Chest x ,y ,z Acceleration Redundant
Chest Compression
Pelvic x ,y ,z Acceleration

Left Femur Force
Right Femur Force
Left Femur Force Redundant (IF EQUIPPED)
Right Femur Force Redundant (IF EQUIPPED)
Left Leg Upper Tibia Moment x
Left Leg Upper Tibia Moment y
Left Leg Upper Tibia Force z (IF EQUIPPED)
Left Leg Lower Tibia Moment x
Left Leg Lower Tibia Moment y
Left Leg Lower Tibia Force z
Right Leg Upper Tibia Moment x
Right Leg Upper Tibia Moment y
Right Leg Upper Tibia Force z (IF EQUIPPED)
Right Leg Lower Tibia Moment x
Right Leg Lower Tibia Moment y
Right Leg Lower Tibia Force z
Left Ankle x , z Acceleration
Left Foot z Acceleration
Right Ankle x , z Acceleration
Right Foot z Acceleration
Lap Belt Force
Shoulder Belt Force

PASSENGER TRACES (same order as driver)

VEHICLE
Left Rear Acceleration x Primary
Right Rear Acceleration x Primary
Engine Top Acceleration
Engine Bottom Acceleration
Left Rear Acceleration z
Right Rear Acceleration z
Left Rear Acceleration x Redundant
Right Rear Acceleration x Redundant

LOAD CELL BARRIER
LCB A1 -A9
LCB B1 -A9
LCB C1 -A9
LCB D1 -A9

12.4 PERFORMANCE REQUIREMENTS – NOTIFICATION OF TEST RESULTS

The performance requirements are found in Section 2 (General Requirements) of this test procedure. If the test results indicate that the test vehicle has exceeded any of the injury criteria or has not met a requirement, the Contractor shall notify the COTR in accordance with **Appendix N, Test Deliverables and Report Guidelines**.

12.5 NCAP TEST DELIVERABLES

Required deliverables for each test are discussed in **Appendix N, Test Deliverables and Report Guidelines**. A Schedule of Deliverables is also provided in that location.

12.6 DATA RETENTION BY THE CONTRACTOR

The Contractor shall retain reproducible copies of all data tapes, high-speed and real-time digital videos, digital photographs, and Form No. 1 manufacturer information for at least five (5) years (at no extra cost to the NHTSA).

The tested vehicles, protected from the elements, shall be retained by the test Contractor for a minimum of 60 days so that OCWS and vehicle manufacturer personnel can be given an inspection opportunity.

12.7 DATA AVAILABILITY TO THE PUBLIC

The Contractor shall provide interested parties with copies of the test report, test CDs or DVDs, test data tapes, test videos, and test still photographs, at a reasonable cost to the purchaser, but only after, the Office of Crashworthiness Standards representative has advised the Contractor that the results of that particular New Car Assessment Program test have been released to the public by the Agency.

APPENDIX A

PART 572E (50th Male) DUMMY PERFORMANCE CALIBRATION TEST PROCEDURE

APPENDIX A
PART 572 SUBPART E DUMMY PERFORMANCE CALIBRATION PROCEDURE

TABLE OF CONTENTS

1. PURPOSE AND APPLICATION 1
2. GENERAL REQUIREMENTS 1
3. SECURITY 3
4. GOOD HOUSEKEEPING 3
5. TEST SCHEDULING AND MONITORING 3
6. TEST DATA DISPOSITION 3
7. GOVERNMENT FURNISHED PROPERTY (GFP) 4
8. CALIBRATION AND TEST INSTRUMENTATION 4
9. PHOTOGRAPHIC DOCUMENTATION 5
10. DEFINITIONS 5
11. PRETEST REQUIREMENTS 6
    - 11.1 TRANSDUCER REQUIREMENTS 6
    - 11.2 OTHER TRANSDUCER CONDITIONS 7
    - 11.3 THORAX IMPACTOR PROBE (572.36(a)) 8
    - 11.4 KNEE IMPACTOR PROBE 8
    - 11.5 GENERAL TEST CONDITIONS 11
12. CALIBRATION TEST EXECUTION 11
13. POST TEST REQUIREMENTS 11
14. REPORTS 11
    - 14.1 APPARENT NONCONFORMANCE 11
    - 14.2 FINAL PERFORMANCE CALIBRATION REPORTS 12
15. DATA SHEETS 14
    - DATA SHEET A1 14
    - DATA SHEET A2 16
    - DATA SHEET A3 23
    - DATA SHEET A4 27
    - DATA SHEET A5 30
    - DATA SHEET A6 36
    - DATA SHEET A7 41
    - DATA SHEET A8 43
    - DATA SHEET A9 46
    - DATA SHEET A10 52

1. PURPOSE AND APPLICATION

The purpose of this laboratory procedure is to provide dummy users (independent testing laboratories under contract with the Office of Crashworthiness Standards) with standard test procedures for performing receiving-inspection and performance calibration tests on the Part 572, Subpart E dummy so that repetitive and correlative test results can be obtained. The following tests have been developed to establish a uniform calibration procedure for all users as the means of verifying the performance of the dummy.

A. EXTERNAL DIMENSIONS

B. HEAD DROP TEST (572.32)

C. NECK FLEXION TEST (572.33)

D. NECK EXTENSION TEST (572.33)

E. THORAX IMPACT TEST (572.34)

F. FEMUR IMPACT TESTS (572.35)

G. HIP JOINT-FEMUR FLEXION (572.35)

This laboratory procedure for the calibration of Part 572, Subpart E dummies must be used by National Highway Traffic Safety Administration (NHTSA) contract laboratories performing NCAP testing for the Office of Crashworthiness Standards (OCWS).

2. GENERAL REQUIREMENTS

The Code of Federal Regulations (49CFR), Parts 571 and 572, was amended to adopt the Hybrid III, 50th Percentile Dummy as the means of determining a vehicle's conformance to the performance requirements of FMVSS 208. This same dummy is used for NCAP testing. Each Part 572, Subpart E dummy used in an NCAP test must meet the specifications and performance criteria of Part 572 before and after each vehicle test in order to be an acceptable test tool.

The Part 572, Subpart E Hybrid III 50th Percentile Dummy consists of components and assemblies specified in the drawing and specifications package which is available from Reprographics Technologies, 9000 Virginia Manor, Beltsville, MD 20705, telephone - (301) 419-5069.

PART 572E TEST DUMMY

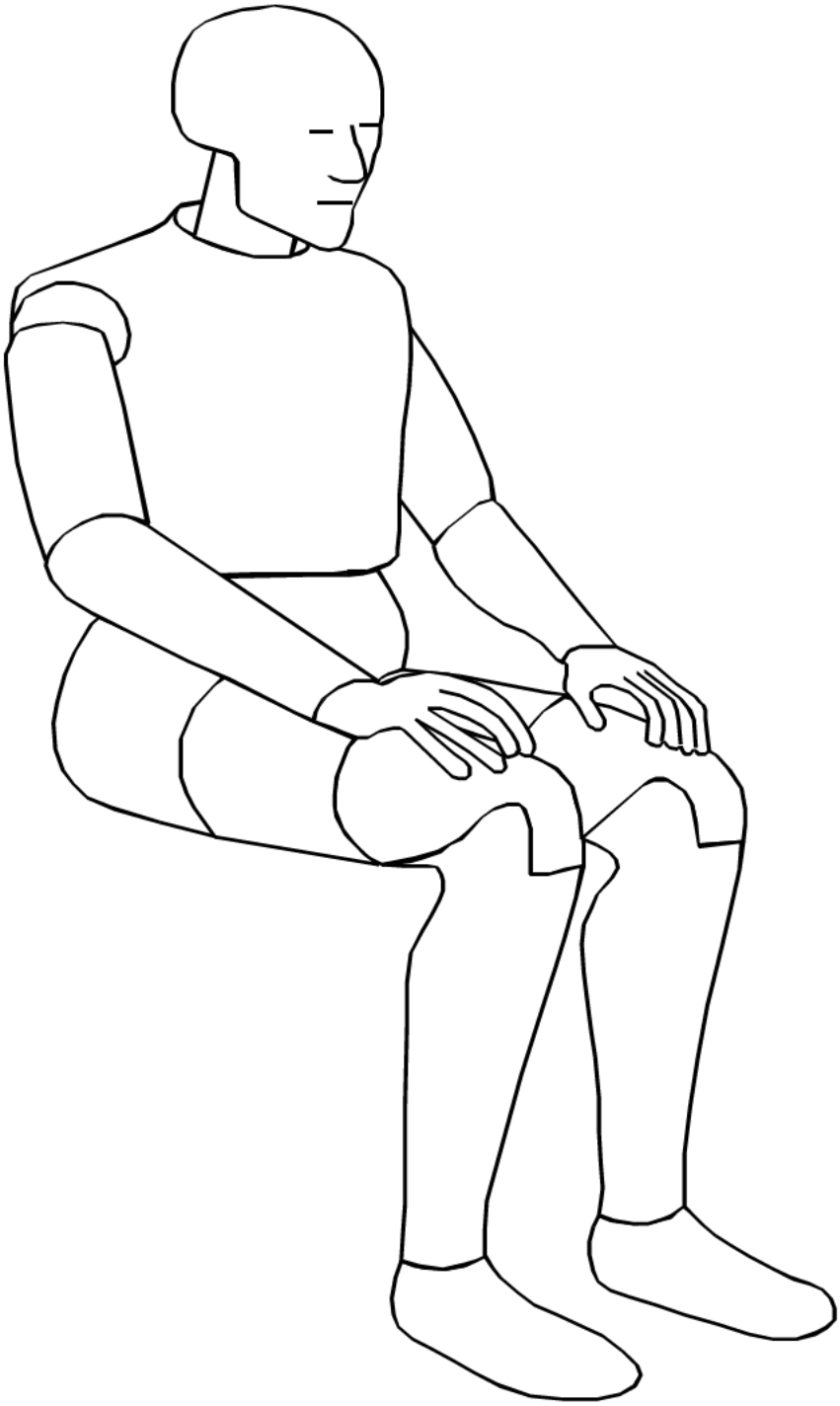

FIGURE 1A

3. SECURITY

All NHTSA Part 572, Subpart E test dummies delivered to the contract laboratory as Government Furnished Property (GFP) will be stored in a safe and secure area such as the dummy calibration laboratory. The contractor is financially responsible for any acts of theft and/or vandalism which occur during the storage of GFP. Any security problems shall be reported by telephone to the Industrial Property Manager (IPM), Office of Contracts and Procurement, within two working days after the incident. A letter containing specific details of the security problem will be sent to the IPM (with copy to the COTR) within 48 hours.

The contractor is responsible for maintaining the NCAP test dummies in good working order, and shall protect and segregate the data that evolves from conducting Part 572, Subpart E dummy calibration tests before and after each vehicle crash usage.

No information concerning the Part 572E dummy calibration data shall be released to anyone except the COTR, unless specifically authorized by the COTR or the COTR's Branch or Division Chief.

NOTE: No individuals, other than contractor personnel directly involved in the dummy calibration test program, shall be allowed to witness dummy calibration tests unless specifically authorized by the COTR.

4. GOOD HOUSEKEEPING

Contractors shall maintain the entire dummy calibration laboratory, test fixtures, and instrumentation in a neat, clean, and painted condition with test instruments arranged in an orderly manner consistent with good test laboratory housekeeping practices.

5. TEST SCHEDULING AND MONITORING

The Part 572, Subpart E dummies are being calibrated as test tools to be used in a vehicle test to determine compliance with the requirements of NCAP. The schedule for these performance calibration tests must be correlated with that of the vehicle tests. All testing shall be coordinated to allow monitoring by the COTR.

6. TEST DATA DISPOSITION

The contractor shall make all dummy calibration data available to the COTR for review and analysis as required. All calibration test data for each particular Part 572, Subpart E dummy will be sent to the COTR with each test report.

All backup data sheets, strip charts, recordings, plots, technicians' notes, etc. shall be either sent to the COTR or destroyed at the conclusion of each delivery order, purchase order, etc.

7. GOVERNMENT FURNISHED PROPERTY (GFP)

P572 test dummies will be furnished to the contract laboratory by the OCWS. The dummies shall be stored in an upright sitting position with the weight supported by the internal structure of the pelvis. The dummies head shall be held upright without supporting the weight of the dummy by using an eyebolt that can be secured in the top of the head. These dummies shall be stored in a secured room that is kept between 55ºF and 85ºF. The contractor will check dummy components for damage after each crash test and complete a dummy damage checklist (Section 15, Data Sheets) that will be included with the posttest dummy calibration. The COTR will be kept informed of the dummies condition in order that replacement parts can be provided. The contractor shall calibrate the dummies before and verify the calibration after every crash test.

8. CALIBRATION AND TEST INSTRUMENTATION

Before the contractor initiates the dummy performance calibration test program, a test instrumentation calibration system must be implemented and maintained in accordance with established calibration practices. The calibration system shall be set up and maintained as follows:

A. Standards for calibrating the measuring and test equipment shall be stored and used under appropriate environmental conditions to assure their accuracy and stability.

B. All measuring instruments and standards shall be calibrated by the contractor, or a commercial facility, against a higher order standard at periodic intervals not exceeding 12 months for instruments and 12 months for calibration standards. Records, showing the calibration traceability to the National Institute of Standards and Technology (NIST), shall be maintained for all measuring and test equipment.

C. All measuring and test equipment and measuring standards shall be labeled with the following information:

1. Date of calibration

2. Date of next scheduled calibration

3. Name of the technician who calibrated the equipment

D. The contractor shall provide a written calibration procedure that includes, as a minimum, the following information for all measurement and test equipment.

1. Type of equipment, manufacturer, model number, etc.

2. Measurement range

3. Accuracy

4. Calibration interval

5. Type of standard used to calibrate the equipment (calibration traceability of the standard must be evident)

6. The actual procedures and forms used to perform calibrations.

E. The contractor shall keep records of calibrations for all test instrumentation in a manner that assures the maintenance of established calibration schedules. All such records shall be readily available for inspection when requested by the COTR. The calibration system will need the written acceptance of the COTR before testing begins.

F. Test equipment shall receive a calibration check immediately prior to and after each test. This check shall be recorded by the test technician(s) and submitted with the final report.

G. Anthropomorphic test devices shall be calibrated before and after each test. These calibrations shall be submitted with the final report.

9. PHOTOGRAPHIC DOCUMENTATION

Provide still photographs (color prints properly focused for clear images, no more than two (2) per 8.5”x11” sheet) of post test damage resulting from the vehicle crash test.

10. DEFINITIONS

NONE

11. PRETEST REQUIREMENTS

11.1 TRANSDUCER REQUIREMENTS

The contractor shall provide and install the following instrumentation to the GFP dummies (excluding chest displacement transducer).

A. HEAD – The head accelerometers shall have dimensions, response characteristics and sensitive mass locations specified in drawing 78051-136, revision A and be mounted in the head as shown in drawing 78051-61X, March 28,1997, and in the assembly shown in drawing 78051-218, revision T. (572.36(c))

Three Endevco 7231C-750 accelerometers with 1% Transverse Sensitivity shall be mounted in the head cavity to measure orthogonal accelerations (Ax, Ay, Az) at the center of gravity (CG) of the head assembly.

B. NECK – The neck transducer shall have the dimensions, response characteristics, and sensitive axis locations specified in drawing 83-5001-008 or C-1709 and be mounted for testing as shown in drawing 79051-63, revision W, and in the assembly shown in drawing 78051-218, revision T. (572.36(d))

C. CHEST – The chest accelerometers shall have the dimensions, response characteristics, and sensitive mass locations specified in drawing 78051-136, revision A and be mounted as shown with adaptor assembly 78051-116, revision D for assembly into 78051-218, revision T. The chest accelerometers are not required for dummy calibration testing but are required for NCAP testing. Three Endevco 7231C-750 accelerometers with 1% Transverse Sensitivity shall be mounted in the chest cavity to measure orthogonal accelerations (Ax, Ay, Az) at the CG of the chest assembly. (572.36(e))

The chest deflection transducer shall have the dimensions and response characteristics specified in drawing 78051-342, revision A (Bourns Potentiometer Model 6638S-432-102, or alternate Vernitech Potentiometer Model 81422A) and be mounted in the chest deflection transducer assembly 78051-317, revision A for assembly into 78051-218, revision T. (572.36(f))

D. LEGS -- The single axis femur force transducer shall have the dimensions, response characteristics, and sensitive axis locations specified in drawing 78051-265 (GSE Model 2430) and be mounted in assemblies 78051-46 and -47 for assembly into 78051-218, revision T. The femur transducers are not required for calibration of the dummy but are required for NCAP testing. (572.36(h))

E. TEST FIXTURE – The neck pendulum, thorax and knee probe accelerometers shall have the dimensions and characteristics of Endevco Model 7231C. (572.36(g))

11.2 OTHER TRANSDUCER CONDITIONS

A. TRANSDUCER MOUNTS
The mountings for sensing devices shall have no resonance frequency within range of 3 times the frequency range of the applicable channel class. (572.36(k)

B. The sign convention for outputs of transducers mounted within the Hybrid III that measure head and chest accelerations, chest deflection and femur loads are located in Figure 2A. For other transducers see SAE J1733DEC94 (Appendix F). (572.36(j) & (572.31(a)(5))

C. TRANSDUCER OUTPUT FILTERING
The outputs of acceleration and force-sensing devices installed in the dummy and in the test apparatus specified by this part are recorded with individual data channels. Each data channel will be comprised of a sensor, signal conditioner, data acquisition device, and all interconnecting cables, and must conform to the requirements of SAE Recommended Practice J211/1 MAR95, "Instrumentation for Impact Test," with channel classes as follows: (572.36(i))

1. Head acceleration – Class 1000 (572.36(i)(1))
2. Neck force – Class 1000 (572.36(i)(2)) (For calculation of the moment about the occipital condyle, use filter class 600 for the neck force)
3. Neck moments – Class 600 (572.36(i)(3))
4. Neck pendulum acceleration – Class 60 (572.36(i)(4))
5. Neck rotation transducers - Class 60
6. Thorax and thorax pendulum acceleration – Class 180 (572.36(i)(5))
7. Thorax deflection - Class 180 (572.36(i)(6))
8. Knee pendulum acceleration – Class 600(572.36(i)(7))
9. Femur force – Class 600 (572.36(i)(8))
10. Hip flexion – Class 60

All filter classes should be of the "phaseless" type to be compatible with the "time" dependent test parameters.

11.3 THORAX IMPACTOR PROBE (572.36(a))

A. The test probe for thoracic impacts is a 6 inch diameter cylinder weighing 51.5 pounds. (572.36(a))
B. The impacting end of the probe is perpendicular to and concentric with the longitudinal axis. It has an edge radius of 0.5 inches. (572.36(a))
C. The probe's end opposite to the impact face must have provisions for mounting of an accelerometer with its sensitive axis collinear with the longitudinal centerline of the cylinder. (572.36(a))

11.4 KNEE IMPACTOR PROBE

A. The test probe for thoracic impacts is a 3- inch diameter cylinder weighing 11 pounds including instrumentation. (572.36(b))
B. The impacting end of the probe is perpendicular to and concentric with the longitudinal axis. It has an edge radius of 0.02 inches. (572.36(b))
C. The probe's end opposite to the impact face must have provisions for mounting of an accelerometer with its sensitive axis collinear with the longitudinal centerline of the cylinder. (572.36(b))

TABLE 1A

SIGN CONVENTIONS FOR PART 572 SUBPART E TEST DUMMIES

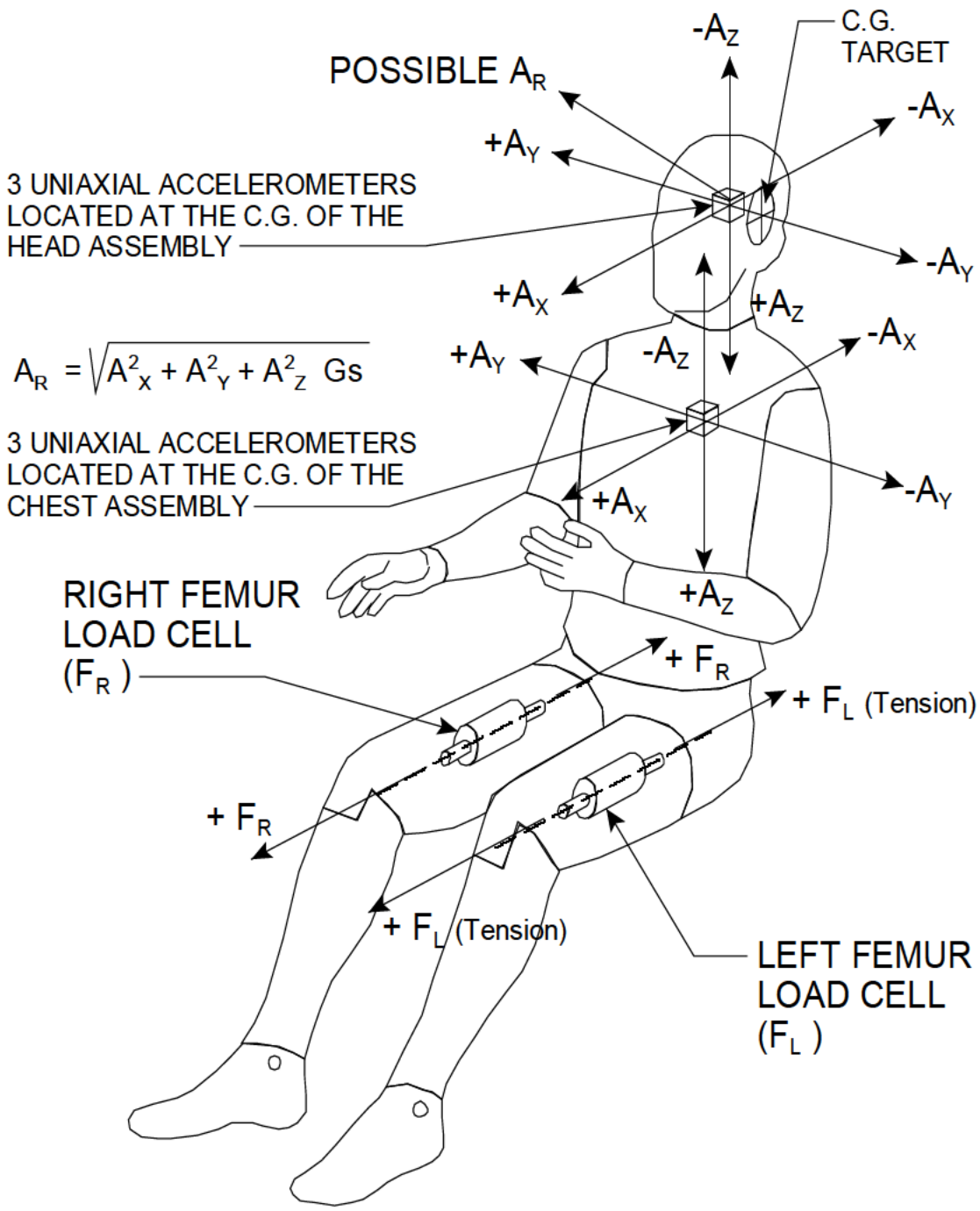

FIGURE 2A

SIGN CONVENTION FOR HYBRID III TRANSDUCER OUTPUTS	
BODY SEGMENT — MEASURED FORCE	**POSITIVE OUTPUT DIRECTION**
NECK FX SHEAR FY SHEAR FZ AXIAL MX MOMENT (ROLL) MY MOMENT (PITCH) MZ MOMENT (YAW)	 HEAD REARWARD OR CHEST FORWARD HEAD LEFTWARD, CHEST RIGHTWARD HEAD UPWARD, CHEST DOWNWARD LEFT EAR TOWARD LEFT SHOULDER CHIN TOWARD STERNUM CHIN TOWARD LEFT SHOULDER
FEMUR FX SHEAR FY SHEAR FZ AXIAL MX MOMENT (ROLL) MY MOMENT (PITCH) MZ MOMENT (YAW)	 KNEE UPWARD, UPPER FEMUR DOWNWARD KNEE RIGHTWARD, UPPER FEMUR LEFTWARD KNEE FORWARD (TENSION), PELVIS REARWARD KNEE LEFTWARD, HOLD UPPER FEMUR IN PLACE KNEE UPWARD, HOLD UPPER FEMUR IN PLACE KNEE ROTATED CCW WHEN FACING FRONT OF DUMMY
KNEE CLEVIS - FZ AXIAL	TIBIA DOWNWARD (TENSION), FEMUR UPWARD
UPPER TIBIA MX MOMENT MY MOMENT	 ANKLE LEFTWARD, HOLD KNEE IN PLACE ANKLE FORWARD, BOTTOM OF KNEE CLEVIS REARWARD
LOWER TIBIA FX SHEAR FY SHEAR FZ AXIAL MX MOMENT MY MOMENT	 ANKLE FORWARD, KNEE REARWARD ANKLE RIGHTWARD, KNEE LEFTWARD ANKLE DOWNWARD (TENSION), KNEE UPWARD ANKLE LEFTWARD, HOLD KNEE IN PLACE ANKLE FORWARD, BOTTOM OF KNEE CLEVIS REARWARD
CHEST DISPLACEMENT	CHEST COMPRESSED - NEGATIVE
KNEE SHEAR DISPLACEMENT	PUSH ON FRONT OF TIBIA - NEGATIVE

NOTE: DIRECTIONS ARE DEFINED IN RELATION TO A SEATED DUMMY

11.5 GENERAL TEST CONDITIONS

A. Surfaces of dummy components are not painted unless otherwise specified. (572.36(n))

B. Dummy performance tests of the same component, segment, assembly, or fully assembled dummy are separated in time by a period of not less than 30 minutes unless otherwise specified. (572.36(m))

C. Dummy performance tests are conducted at any temperature from 69ºF to 72ºF unless otherwise specified and at any relative humidity from 10% to 70% after exposure of the dummy to these conditions for a period of not less than 4 hours.

D. Dummy limb joints are set at 1 g, barely restraining the weight of the limb when it is extended horizontally. The force required to move a limb segment does not exceed 2 Gs throughout the range of limb motion. (572.36(l))

E. Dummies will be clothed for the thorax calibration tests with the exception of the shoes being removed.

12. CALIBRATION TEST EXECUTION

Complete the Data Sheets in section 15.

13. POST TEST REQUIREMENTS

The contractor shall verify all instrumentation and check data sheets and photographs. Make sure data is recorded in all data blocks on every performance calibration test data sheet.

14. REPORTS

14.1 APPARENT NONCONFORMANCE

During the post test calibration, any indication of apparent nonconformance to the requirements of Regulation P572 shall be communicated by telephone to the COTR within 24 hours with written notification mailed within 48 hours (Saturdays and Sundays excluded). Written notification shall be submitted with a copy of the particular test data sheet(s) and preliminary data plot(s).

In the event of an apparent nonconformance, a post test calibration check of some critically sensitive test equipment and instrumentation may be required for verification of accuracy. The necessity for the calibration shall be at the COTR's discretion and shall be performed without additional costs to the OCWS.

14.2 FINAL PERFORMANCE CALIBRATION REPORTS

14.2.1 COPIES

A report containing the pre-test calibration and post test calibration verification data for each Part 572, Subpart E dummy used in the NCAP test shall be submitted with the final test report for the vehicle tested.

Contractors are required to PROOF READ all Final Test Reports before submittal to the COTR. The OCWS will not act as a report quality control office for contractors. Reports containing a significant number of errors will be returned to the contractor for correction, and a "hold" will be placed on invoice payment for the particular test.

14.2.2 REQUIREMENTS

Performance calibration report Table of Contents shall include the following:

A. Section 1 — Purpose of Calibration Test

B. Section 2 — Calibration Data Summary

C. Section 3 — Test Data

D. Section 4 — Test Equipment List and Calibration Information

E. Section 5 — Photographs (if applicable)

The test data for each dummy will be presented in separate sections. Each section shall contain a title page, test results summary and the test data. The title page shall include the dummy's serial number and the manufacturer's name. It will also indicate whether the calibration data is pre or post test. The test results sheets will provide a summary of each test and describe any damage, failures and/or corrective action taken. The test data shall include the pass/fail data sheets, the time histories for each data channel used to determine the pass or fail status, and instrumentation calibration data sheets.

14.2.3 FIRST PAGE

FRONT COVER

A heavy paperback cover (or transparency) shall be provided for the protection of the final report. The information required on the cover is as follows:

A. Final Report Title and Subtitle such as

DUMMY PERFORMANCE CALIBRATION
IN SUPPORT OF
NEW CAR ASSESSMENT PROGRAM (NCAP) TESTING

B. Contractor's Name and Address such as

ABC TESTING LABORATORIES, INC.
405 Main Street
Detroit, Michigan 48070

NOTE: DOT SYMBOL WILL BE PLACED BETWEEN ITEMS B AND C

C. Date of Final Performance Calibration Report completion

D. The sponsoring agency's name and address as follows

DOT / NHTSA
Office of Crashworthiness Standards

1200 New Jersey Ave, SE

W43-404 / NVS-110

Washington, DC 20590

15. DATA SHEETS

DATA SHEET A1

DUMMY DAMAGE CHECKLIST (50th Male)

Dummy Serial Number _____ Test Date _____

Technician _____

This check sheet is completed as part of the post test calibration verification.

__ Perform general cleaning.

Dummy Item	**Inspect for**	**Comments**	**Damaged**	**OK**
Outer skin	Gashes, rips, cracks			
Head	Ballast secure			
	General appearance			
Neck	Broken or cracked rubber			
	Upper neck bracket firmly attached to the lower neck bracket			
	Looseness at the condyle joint			
	Nodding blocks cracked or out of position			
Spine	Broken or cracks in rubber.			
Ribs	Broken or bent ribs			
	Broken or bent rib supports			
	Damping material separated or cracked			
	Rubber bumpers in place			
Chest Displacement Assembly	Bent shaft			
	Slider arm riding in track			
Transducer leads	Torn cables			

Dummy Item	Inspect for	Comments	Damaged	OK
Accelerometer Mountings	Head mounting secure			
	Chest mounting secure			
Knees	Skin condition			
	Insert (do not remove)			
	Casting			
Limbs	Normal movement and adjustment			
Knee Sliders	Wires intact			
	Rubber returned to “at rest” position			
Pelvis	Broken			
Other				

If upon visual examination, damage is apparent in any of these areas, the appropriate engineer or engineering technician is to be consulted for a decision on repair or replacement of parts.
Repair or Replacement approved by:

_____ _____
Signature Date

Describe the repair or replacement of parts:

Checked by

_____ _____
Signature Date

DATA SHEET A2
EXTERNAL MEASUREMENTS (50th Male)
(Procedures for Disassembly, Inspection and Assembly of the Hybrid III Dummy, Appendix A)

Dummy Serial Number _____ Test Date _____

Technician _____

__Pretest calibration
__Post test calibration verification

__1. Remove the dummy's chest jacket and the abdominal insert.
__2. Seat the dummy on a flat, rigid, smooth, clean, dry, horizontal surface as shown in Figure 3A. The seating surface is at least 406 mm (16 in) wide and 406 mm (16 in) in depth with a vertical section at least 406 mm (16 in) wide and 914 mm (36 in) high attached to the rear of the seating fixture. The dummy's midsagittal plane is vertical and centered on the test surface.
__3. Remove the four socket head cap screws that attach the lumbar spine to the thoracic spine. Lift the upper torso off of the lower torso. Check the torque on the two spine cables. The torque should be 1.2 – 1.4 NM (11 – 12 in-lbs).

NOTE: At this point the thorax is to be inspected for damage. The thorax displacement transducer may be removed for calibration if required (pretest calibration only). Extreme caution to be used so as not to damage the instrumentation cables.

__4. Reassemble the upper torso to the lower torso.
__5. Secure the dummy to the test fixture so that the rear surfaces of the upper thorax and buttock are tangent or as near tangent as possible to the rear vertical surface of the fixture and the dummy's midsagittal plane is vertical.
__6. Position the dummy's H-point so it is 3.4 ± 0.1 in above the horizontal seating surface and 5.4 ± 0.1 in forward of the rear vertical surface of the fixture. (Note: the H-point is located 1.83 in. forward and 2.57 in. downward from the center of the pelvic angle reference hole in the lumbar-pelvic adaptor.)
__7. Extend the dummy's neck so that the base of the skull is level both fore-and-aft and side-to-side, within 0.5 degrees. The rear surface of the skull cap should be 1.7 ± 0.1 in. from the vertical surface of the test fixture. A strap or bungee cord may be placed around the forehead of the dummy to stabilize the head in this position.
__8. Position the upper and lower legs parallel to the midsagittal plane so the centerline between the knee pivot and the ankle pivot is vertical.
__9. Position the feet parallel to the dummy's midsagittal plane with the bottoms horizontal and parallel to the seating surface.
__10. Position the upper arms downward vertically so the centerline between the shoulders and elbow pivots is parallel to the rear vertical surface of the fixture.

__11. Position the lower arms horizontally so the centerline between the elbow and wrist pivots is parallel to the seat surface.
__12. Record the dimensions listed in the following table, except for dimension Y and Z (reference figure 3A).
__13. Install the abdominal insert and chest jacket. Reposition the dummy on the test fixture. The head need not be level as previously specified.
__14. Mark the locations AA and BB, and record the dimensions Y and Z, as specified in the table and figure 3A.

_____ _____
Signature Date

HYBRID III, PART 572, SUBPART E EXTERNAL DIMENSIONS				
DIMENSION	DESCRIPTION	DETAILS	ASSEMBLY DIMENSION (inches)	ACTUAL MEASUREMENT
A	TOTAL SITTING HEIGHT	Seat surface to highest point on top of the head.	34.6–35.0	
B	SHOULDER PIVOT HEIGHT	Centerline of shoulder pivot bolt to the seat surface.	19.9-20.5	
C	H-POINT HEIGHT	Reference	3.3-3.5	
D	H-POINT LOCATION FROM BACKLINE	Reference	5.3-5.5	
E	SHOULDER PIVOT FROM BACKLINE	Center of the shoulder clevis to the rear vertical surface of the fixture.	3.3-3.7	
F	THIGH CLEARANCE	Measured at the highest point on the upper femur segment.	5.5-6.1	
G	BACK OF ELBOW TO WRIST PIVOT	back of the elbow flesh to the wrist pivot in line with the elbow and wrist pivots	11.4-12.0	
H	HEAD BACK TO BACKLINE	Back of Skull cap skin to seat rear vertical surface (Reference)	1.6-1.8	
I	SHOULDER TO- ELBOW LENGTH	Measure from the highest point on top of the shoulder clevis to the lowest part of the flesh on the elbow in line with the elbow pivot bolt.	13.0-13.6	
J	ELBOW REST HEIGHT	Measure from the flesh below the elbow pivot bolt to the seat surface.	7.5-8.3	
K	BUTTOCK TO KNEE LENGTH	The forward most part of the knee flesh to the rear vertical surface of the fixture.	22.8-23.8	
L	POPLITEAL HEIGHT	Seat surface to the plane of the horizontal plane of the bottom of the feet.	16.9-17.9	
M	KNEE PIVOT HEIGHT	Centerline of knee pivot bolt to the horizontal plane of the bottom of the feet.	19.1-19.7	
N	BUTTOCK POPLITEAL LENGTH	The rearmost surface of the lower leg to the same point on the rear surface of the buttocks used for dim. “K”.	17.8-18.8	

HYBRID III, SUBPART E EXTERIOR DIMENSIONS, continued				
DIMENSION	DESCRIPTION	DETAILS		ACTUAL MEASUREMENT
O	CHEST DEPTH WITHOUT JACKET	Measured 16.9-17.1 in. above seat surface	8.4-9.0	
P	FOOT LENGTH	Tip of toe to rear of heal	9.9-10.5	
V	SHOULDER BREADTH	Outside edges of right and left shoulder clevises	16.3-17.2	
W	FOOT BREADTH	The widest part of the foot	3.6-4.2	
Y	CHEST CIRCUMFERENCE (WITH CHEST JACKET)	Measured 16.9-17.1 in. above seat surface	38.2-39.4	
Z	WAIST CIRCUMFERENCE	Measured 8.9-9.1 in. above seat surface	32.9-34.1	
AA	REFERENCE LOCATION FOR MEASUREMENT OF CHEST CIRCUMFERENCE	Reference	16.9-17.1	
BB	REFERENCE LOCATION FOR MEASUREMENT OF WAIST CIRCUMFERENCE	Reference	8.9-9.1	

NOTE: THE H-POINT IS LOCATED 1.83 INCHES FORWARD AND 2.57 INCHES DOWN FROM THE CENTER OF THE PELVIS ANGLE REFERENCE HOLE.

EXTERNAL DIMENSIONS SPECIFICATIONS

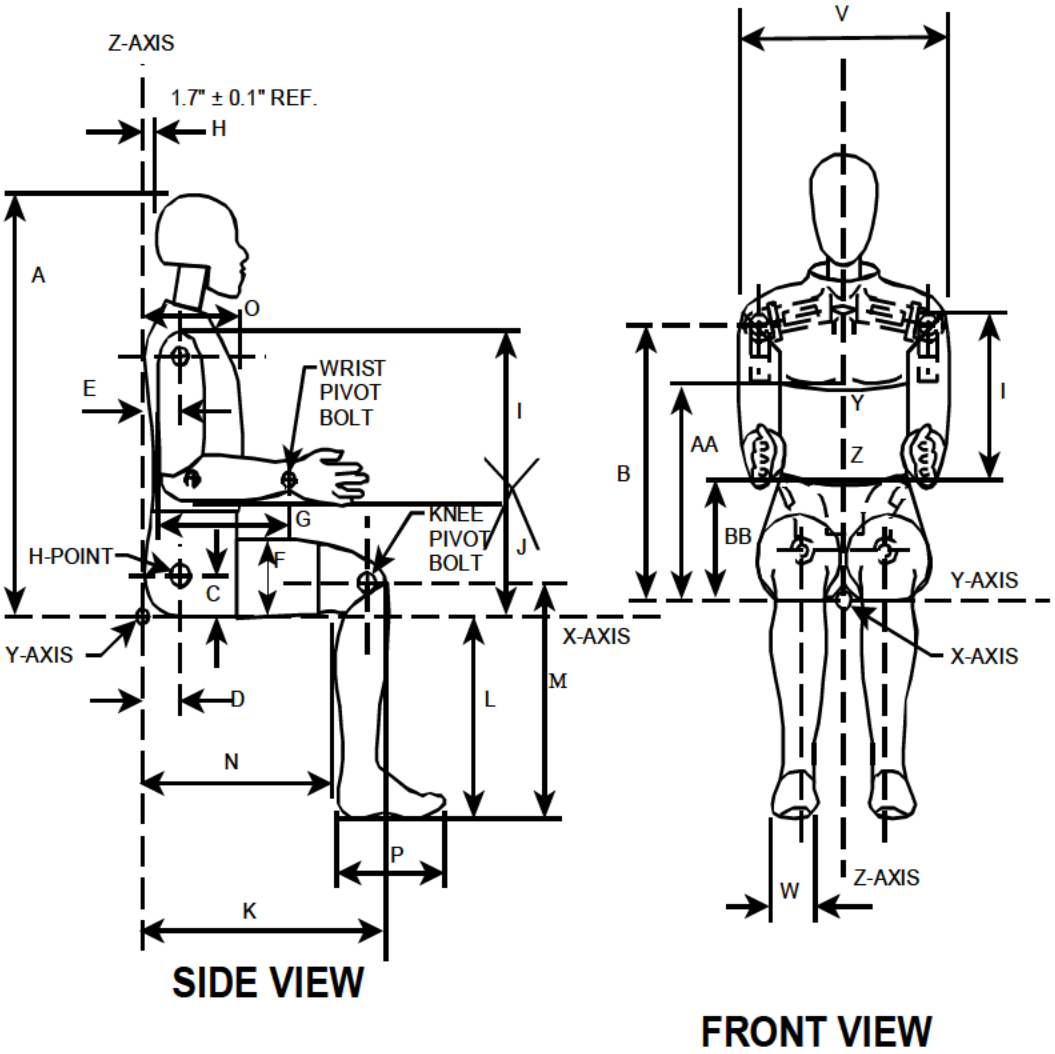

NOTE: Figure is referenced to the erect seated position. The curved lumbar does not allow the Hybrid III to be positioned in a perfect erect attitude. (REF: S572.31(A)(6))

FIGURE 3A

EXTERNAL DIMENSIONS TEST SETUP

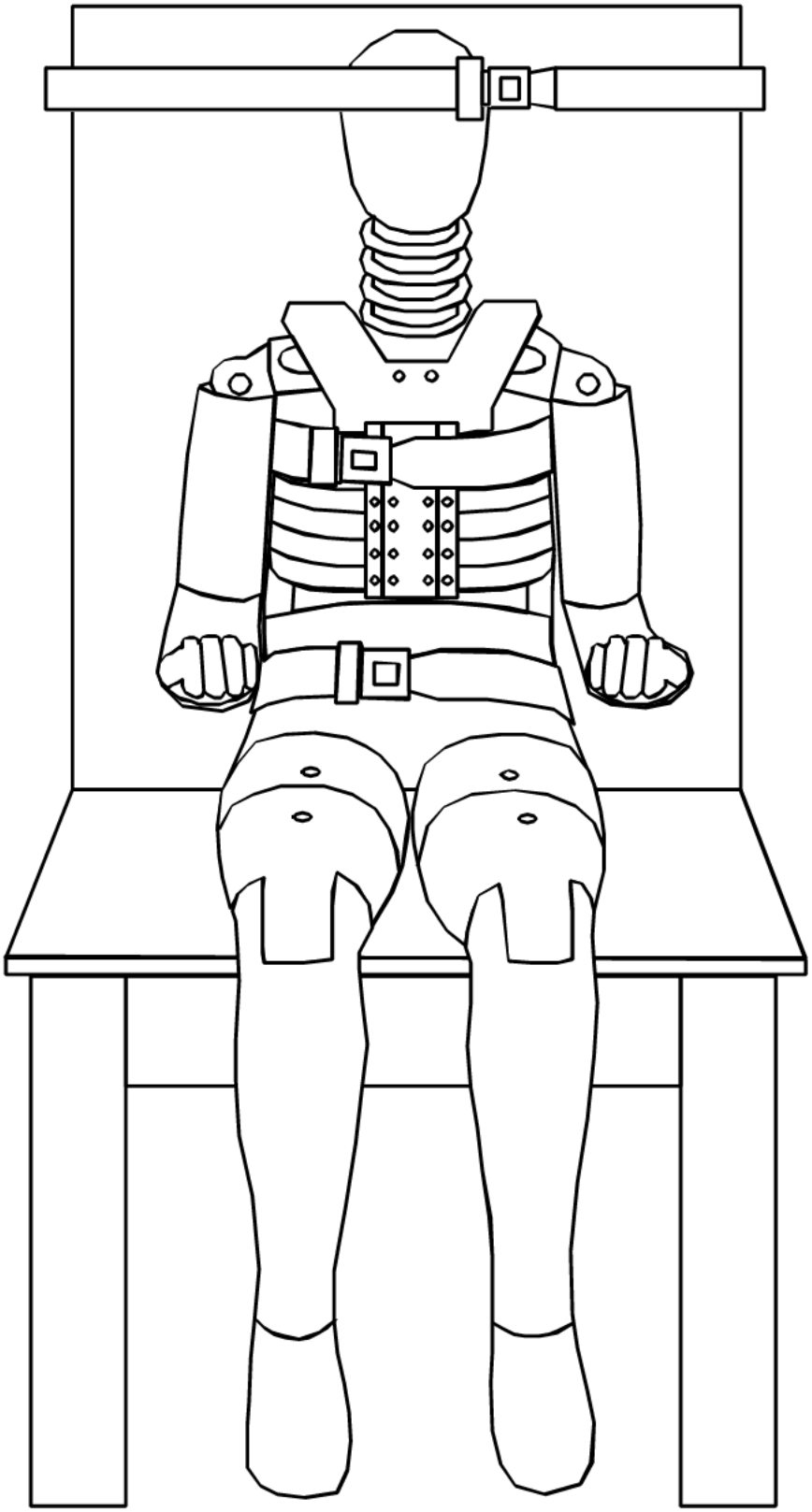

FIGURE 4A

EXTERNAL DIMENSIONS TEST SETUP

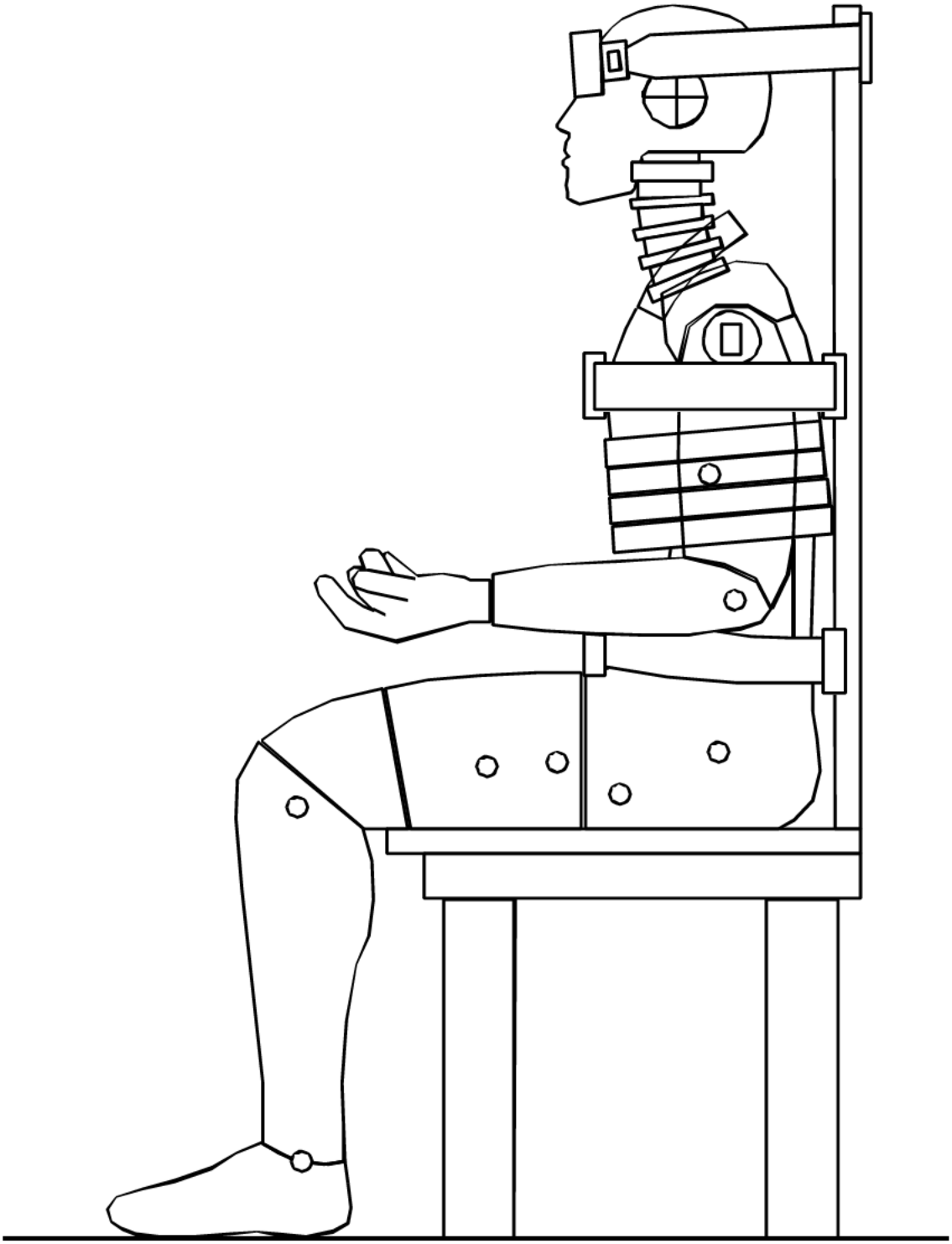

FIGURE 5A

DATA SHEET A3
HEAD DROP TEST (572.32) (50th Male)

Dummy Serial Number _____ Test Date _____

Technician _____

__Pretest calibration
__Post test calibration verification

Test attempt no. ____ (when successive head drops are necessary)

__1. It has been at least 3 hours since the last head drop. (572.32(c)(5))
__ N/A, ONLY one head drop performed
__2. The head assembly consists of the complete head (78051-61X), the neck transducer structural replacement (78051-383X), and three (3) accelerometers. (572.32(b))
__3. Torque the skull cap screws to 160 lbf-in.
__4. Accelerometers and their respective mounts are smooth and clean.
__6. The data acquisition system, including transducers, conforms to the requirements of SAE Recommended Practice J211/1 MAR95. (572.35(i))
__7. The head assembly soaked at a temperature between 18.9°C (66°F) and 25.6°C (78°F) and at a relative humidity from 10% to 70% for a period of at least four (4) hours prior to a test. (572.32(c)(1))
Record the maximum temperature _____
Record the minimum temperature _____
Record the maximum humidity _____
Record the minimum humidity _____
__8. Visually inspect the head skin for cracks, cuts, abrasions, etc. Repair or replace the head skin if the damaged area is more than superficial. Note: If the damage resulted from the vehicle crash test in which the dummy was an occupant, the damaged area is to be documented with photography and the post test calibration verification testing completed before any replacement or repairs are made.
Record findings and actions: _____
_____
_____
_____
_____
__9. Clean the impact surface of the skin and the impact surface of the fixture with isopropyl alcohol, 1,1,1 trichloroethane or equivalent prior to the test. (572.32(c)(2))

__10. Suspend and orient the head assembly as shown in Figure 6A. The lowest point on the forehead is 0.5 in. below the lowest point on the dummy's nose when the midsagittal plane is vertical. (572.32(c)(3))
Record the actual distance _____

NOTE: The masses of the suspension device and the accelerometer cables are to be kept as lightweight as possible to minimize their effect on the test results.

__11. The 1.6 mm (0.062 inch) diameter holes located on either side of the dummy's head are equidistance within 2 mm from the impact surface. A typical test setup is shown in Figure 7A.
Record the right side distance_____
Record the left side distance _____

__12. The impact surface is clean and dry and has a micro finish in the range of 203.2×10^{-6} mm (8 micro inches) to 2032.0×10^{-6} mm (80 micro inches) (RMS). (572.32(c)(4))
Record actual micro finish _____

__13. The impact surface is rigidly supported. (572.32(c)(4))

__14. The impact surface is a flat horizontal steel plate 50.8 mm (2 inches) thick and 610 mm (24 inches) square. (Figure 6A)
Record thickness_____
Record width _____
Record length _____

__15. Drop the head assembly from a height of 376.0 ± 1.0 mm (14.8 inches ± 0.04 inches) by a means that ensures a smooth, instant release onto the impact surface. (572.32(b) & (572.32(c)(4))

__16. Complete the following table using channel class 1000 data. (572.36(i)):

Parameter	Specification	Result
Peak resultant acceleration	225 g ≤ x ≤ 275 g	
Resultant versus time history curve	Unimodal	
Oscillations after the main pulse	Less than 10% of the peak resultant acceleration	
Lateral acceleration	y-axis acceleration ≤ 15 g	

__17. Plots of the x, y, z, and resultant acceleration data follow this sheet.

_____ _____
Signature Date

TEST SET-UP SPECIFICATIONS

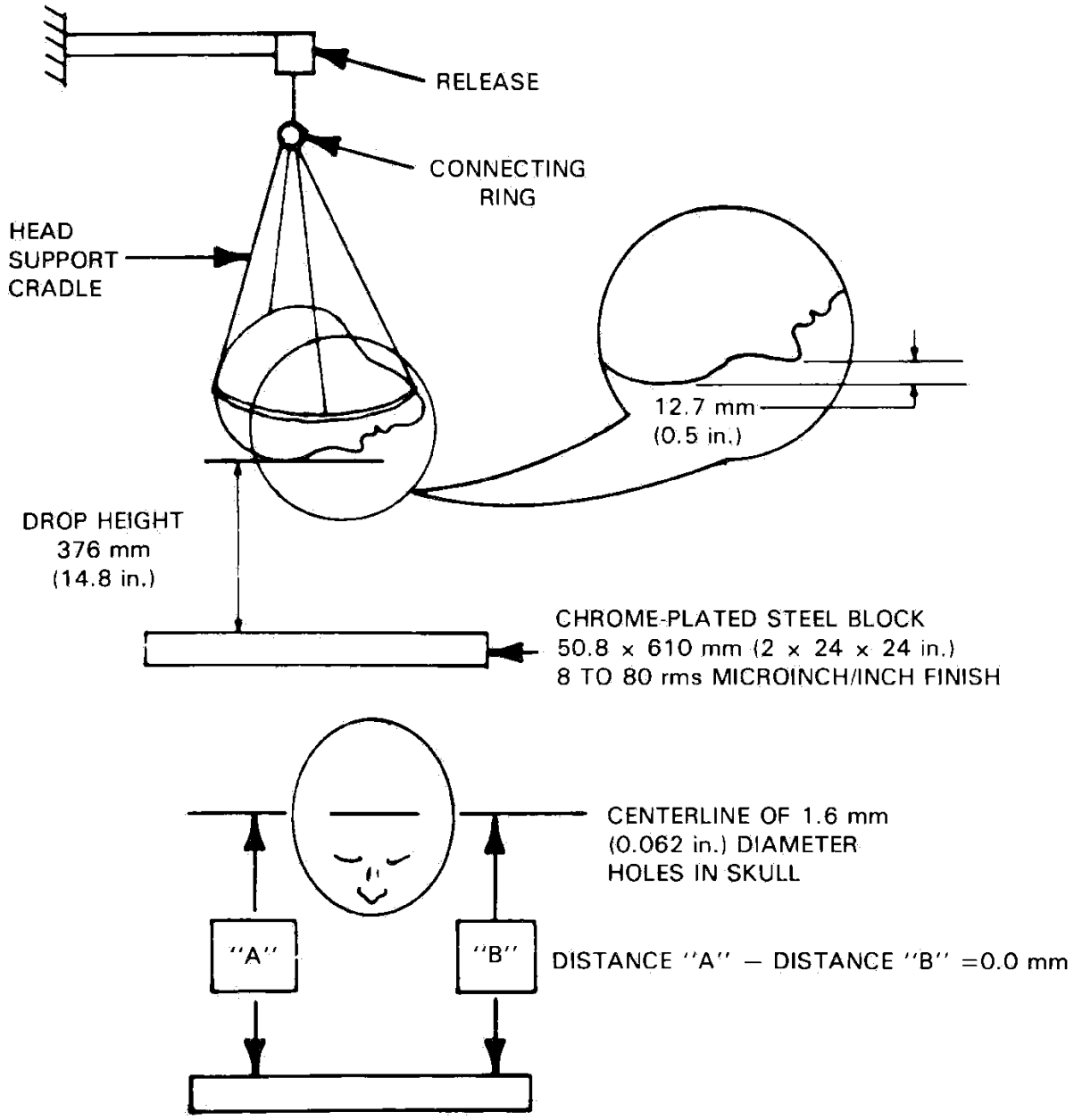

NOTE: TOLERANCE ON TEST SETUP DIMENSIONS ±1 mm (0.04 in.)

FIGURE 6A

HEAD DROP TEST SETUP

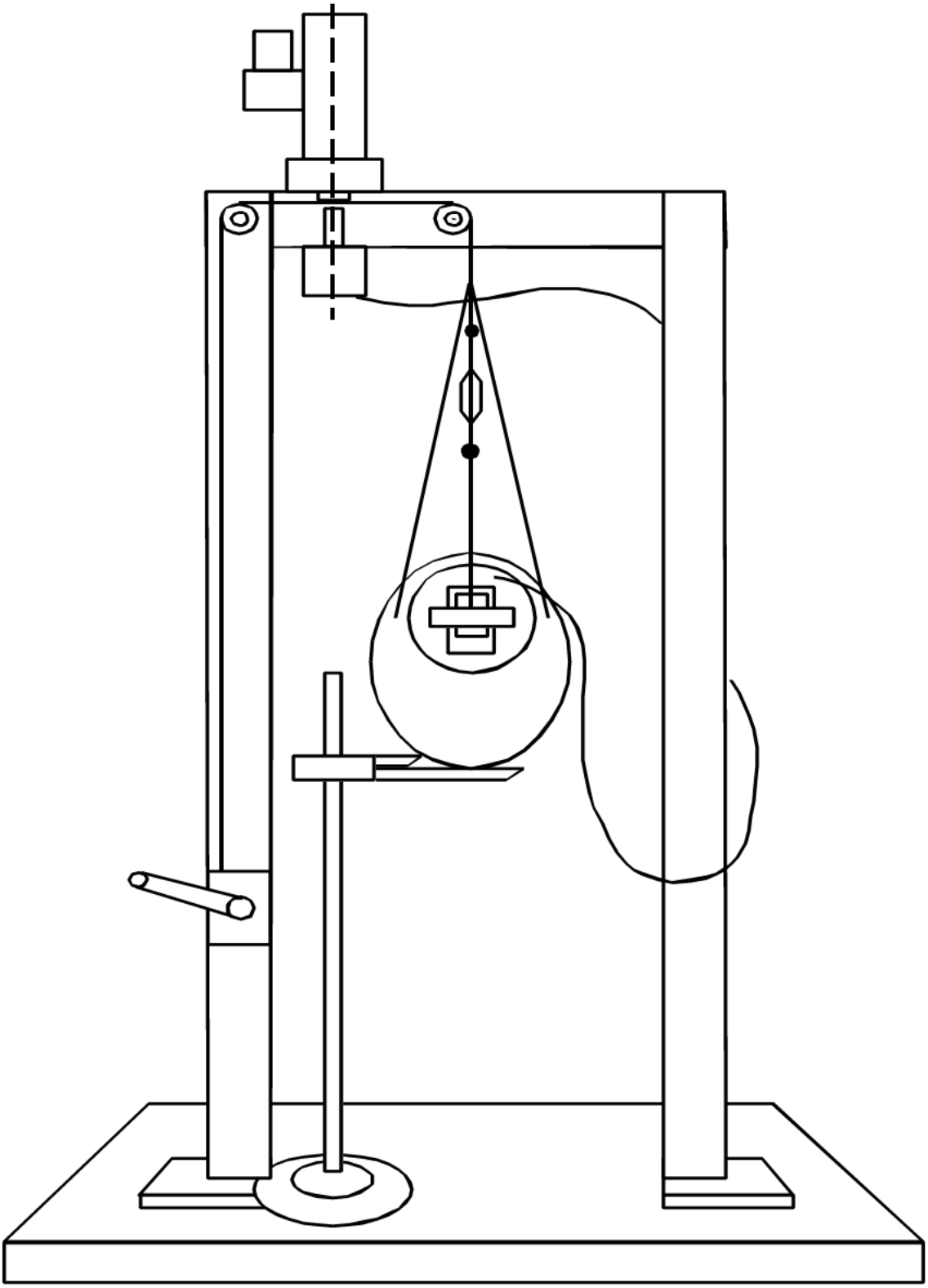

FIGURE 7A

DATA SHEET A4
NECK FLEXION TEST (572.33) (50th Male)

Dummy Serial Number _____ Test Date _____

Technician _____

__Pretest calibration
__Post test calibration verification

Test attempt no. ____ (when successive flexion tests are necessary)

__1. It has been at least 30 minutes since the last flexion test. (572.36(m))
__ N/A, ONLY one neck test performed

__2. The components required for the neck tests include the head assembly (78051-61X), neck assembly (78051-90), bib simulator (78051-84), upper neck adjusting bracket (78051-307), lower neck adjusting bracket (78051-303), six axis neck transducer (C-1709) and either three accelerometers or their mass equivalent installed in the head assembly. Data from the accelerometers are not required. (572.33(b))

__3. The assembly soaked at a temperature between 20.6°C (69ºF) and 22.2°C (72ºF) and at a relative humidity from 10% to 70% for a period of at least four (4) hours prior to a test. (572.33(c)(1))
Record the maximum temperature _____
Record the minimum temperature _____
Record the maximum humidity _____
Record the minimum humidity _____

__4. Visually inspect neck assembly for cracks, cuts and separation of the rubber from the metal segments. Note: If the damage resulted from the vehicle crash test in which the dummy was an occupant, the damaged area is to be documented with photography and the post test calibration verification testing completed before any replacement or repairs are made.
Record findings and actions: _____
_____
_____

__5. Inspect the nodding blocks (78051-351) for any deterioration, but when replacement is necessary, ONLY replace during pre-test calibration. Using a Shore "A" type Durometer, verify the hardness of the nodding blocks is between 80 and 90. Ensure the nodding blocks are installed correctly. (78051-90).
Record findings and actions: _____
_____
_____

__6. Pre-test calibration neck cable torque: Torque the jam nut (78051-64) on the neck cable (78051-301) to 1.0 ± 0.2 lb-ft by loosening the jam nut and relaxing the neck cable before torquing. (572.33(c)(2))

__7. The data acquisition system, including transducers, conforms to the requirements of SAE Recommended Practice J211/1 MAR95. (572.36(i))

__8. The test fixture pendulum conforms to the specifications in Figure 8A. (572.33(c)(3))

__9. The head-neck assembly is mounted on the pendulum so the midsagittal plane of the head is vertical and coincides with the plane of motion of the pendulum longitudinal centerline as shown in Figure 9A for the flexion test. (572.33(c)(3))

__10. Install the transducers or other devices for measuring the "D" plane rotation with respect to the pendulum longitudinal centerline. Note: Plane "D" is the bottom horizontal surface of the skull. These measurement devices should be designed to minimize their influence upon the performance of the head-neck assembly. An example of a measurement device is shown in Figure 11A.

__11. With the pendulum resting against the honeycomb material, the neck bracket was adjusted until the longitudinal centerline of the pendulum was perpendicular ± 1 degree to plane "D" on the dummy's head.

__12. Release the pendulum and allow it to fall freely from a height to achieve an impact speed of 22.6 to 23.4 ft/sec as measured at the center of the pendulum accelerometer. (572.33(c)(4))

__13. Complete the following table:

Neck Flexion Test Results (572.33(b)(1) & (572.33(c)(4)

Parameter		Specification	Result
Pendulum impact speed		22.6 ft/sec ≤ speed ≤ 23.4 ft/sec	
Pendulum Deceleration Versus Time Pulse	@ 10ms	22.5 ≤ g ≤ 27.5	
	@ 20 ms	17.6 ≤ g ≤ 22.6	
	@30ms	12.5 ≤ g ≤ 18.5	
	Above 30 ms	29 g maximum	
First Pendulum Decay to 5g		34 ms ≤ time ≤ 42 ms	
Plane D Rotation		64° ≤ max. rotation ≤ 78°	
		57 ms ≤ time of max. rotation ≤ 64 ms	
Time for Plane D Rotation to Cross 0° During First Rebound		113 ms ≤ time ≤ 128 ms	
Maximum Moment		65 lbf-ft ≤ moment ≤ 80 lbf-ft	
		47 ms ≤ time of max. moment ≤ 58 ms	
Time of first decay to 0 lbf-ft Positive Moment Decay** (Flexion)		97 ms ≤ time ≤ 107ms	

*Moment about the occipital condyle = M_y – (0.058 ft x F_x) (572.33(b)(1)(ii))

My = Moment in lbf-ft measured by the transducer

Fx = Force, in lbf measured by the transducer

**Time zero is defined as the time of initial contact between the pendulum striker plate and the honeycomb material. (572.133(b)(3)

__14. Plots of pendulum acceleration, y-axis moment, x-axis force, y-axis moment about the occipital condyle, and D plane rotation follows this sheet.

_____ _____

Signature Date

DATA SHEET A5
NECK EXTENSION TEST (572.33) (50th Male)

Dummy Serial Number _____ Test Date _____

Technician _____

__Pretest calibration
__Post test calibration verification

Test attempt no. ____ (when successive extension tests are necessary)

__1. It has been at least 30 minutes since the last extension test. (572.36(m))
__ N/A, ONLY one neck test performed

__2. The components required for the neck tests include the head assembly (880105-100X), neck (880105-250), bib simulator (880105-371), upper neck adjusting bracket (880105-207), lower neck adjusting bracket (880105-208), six axis neck transducer (SA572-S11) and either three accelerometers (SA572-S4) or their mass equivalent installed in the head assembly as specified in drawing 880105-100X. Data from the accelerometers are not required. (572.33(b))

__3. The assembly soaked at a temperature between 20.6°C (69°F) and 22.2°C (72°F) and at a relative humidity from 10% to 70% for a period of at least four (4) hours prior to a test. (572.33(c)(1))
Record the maximum temperature _____ Record the minimum temperature _____
Record the maximum humidity _____ Record the minimum humidity _____

__4. Visually inspect neck assembly for cracks, cuts and separation of the rubber from the metal segments. Note: If the damage resulted from the vehicle crash test in which the dummy was an occupant, the damaged area is to be documented with photography and the post test calibration verification testing completed before any replacement or repairs are made.
Record findings and actions: _____
_____
_____

__5. Inspect the nodding blocks (78051-351) for any deterioration, but when replacement is necessary, ONLY replace during pre-test calibration. Using a Shore "A" type Durometer, verify the hardness of the nodding blocks is between 80 and 90. Ensure the nodding blocks are installed correctly. (880105-250 and PADI page17).
Record findings and actions: _____
_____
_____

6. Pre-test calibration Neck cable torque: Torque the jam nut (78051-64) on the neck cable (78051-301) to 1.0 ± 0.2 lb-ft by loosening the jam nut and relaxing the neck cable before torquing. (572.33(c)(2))

__7. The data acquisition system, including transducers, conforms to the requirements of SAE Recommended Practice J211/1 MAR95. (572.36(i))

__8. The test fixture pendulum conforms to the specifications in Figure 8A. (572.33(c)(3))

__9. The head-neck assembly is mounted on the pendulum so the midsagittal plane of the head is vertical and coincides with the plane of motion of the pendulum longitudinal centerline as shown in Figure 10A for the extension test. (572.33(c)(3))

__10. Install the transducers or other devices for measuring the "D" plane rotation with respect to the pendulum longitudinal centerline. Note: Plane "D" is the bottom horizontal surface of the skull. These measurement devices should be designed to minimize their influence upon the performance of the head-neck assembly. An example of a measurement device is shown in Figure 11A.

__11. With the pendulum resting against the honeycomb material, the neck bracket was adjusted until the longitudinal centerline of the pendulum was perpendicular ± 1 degree to plane "D" on the dummy's head.

__12. Release the pendulum and allow it to fall freely from a height to achieve an impact speed of 19.5 ft/s to 20.3 ft/s as measured at the center of the pendulum accelerometer. (572.33(c)(4))__13. Complete the following table:

Neck Extension Test Results (572.33(b)(2) & (572.33(c)(4))

Parameter		Specification	Result
Pendulum impact speed		19.5 ft/sec ≤ speed ≤ 20.3 ft/sec	
Pendulum Deceleration versus time pulse	@ 10ms	17.2 ≤ g ≤ 21.2	
	@ 20 ms	14 ≤ g ≤ 19	
	@30ms	11.0 ≤ g ≤ 16.0	
	Above 30 ms	22 g maximum	
First Pendulum Decay to 5g		38 ms ≤ time ≤ 46 ms	
Plane D Rotation		81° ≤ max. rotation ≤ 106°	
		72 ms ≤ time of max. rotation ≤ 82 ms	
Time for Plane D Rotation to Cross 0° During First Rebound		147 ms ≤ time ≤ 174 ms	
Maximum Moment		-59 lbf-ft ≤ moment ≤ -39 lbf-ft	
		65 ms ≤ time ≤ 79 ms	
Time of first decay to 0 lbf-ft Negative Moment Decay** (Extension)		120 ms ≤ time ≤ 148 ms	

*Moment about the occipital condyle = M_y – (0.01778 m x F_x) (572.133(b)(1)(ii)

My = Moment in Nm measured by the transducer

Fx = Force, in N measured by the transducer

**Time zero is defined as the time of initial contact between the pendulum striker plate and the honeycomb material. (572.133(b)(3)

__14. Plots of pendulum acceleration, y-axis moment, x-axis force, y-axis moment about the occipital condyle, and D plane rotation follows this sheet.

_____ _____

Signature Date

PENDULUM SPECIFICATIONS

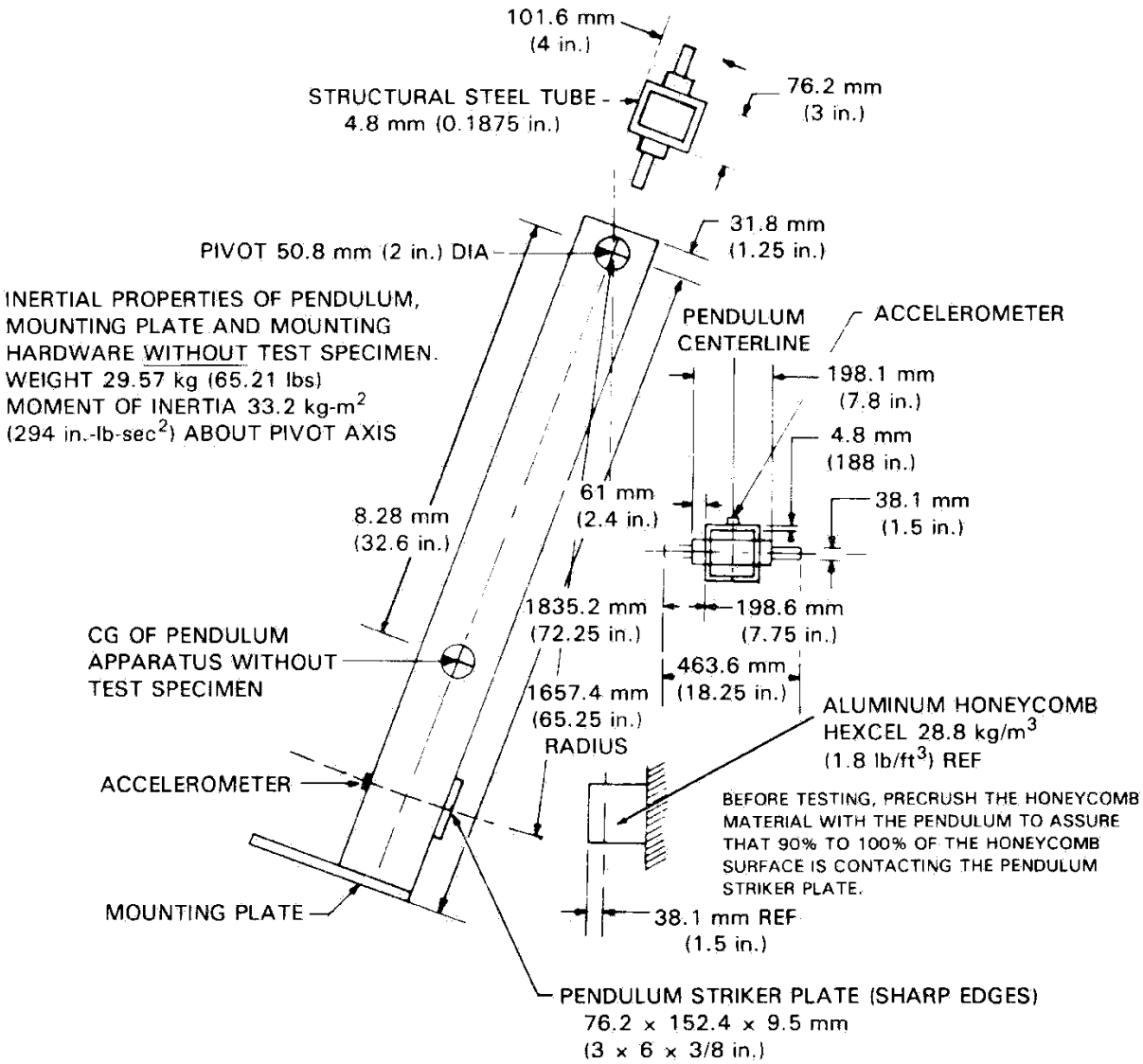

FIGURE 8A

FLEXION - TEST SET-UP SPECIFICATIONS

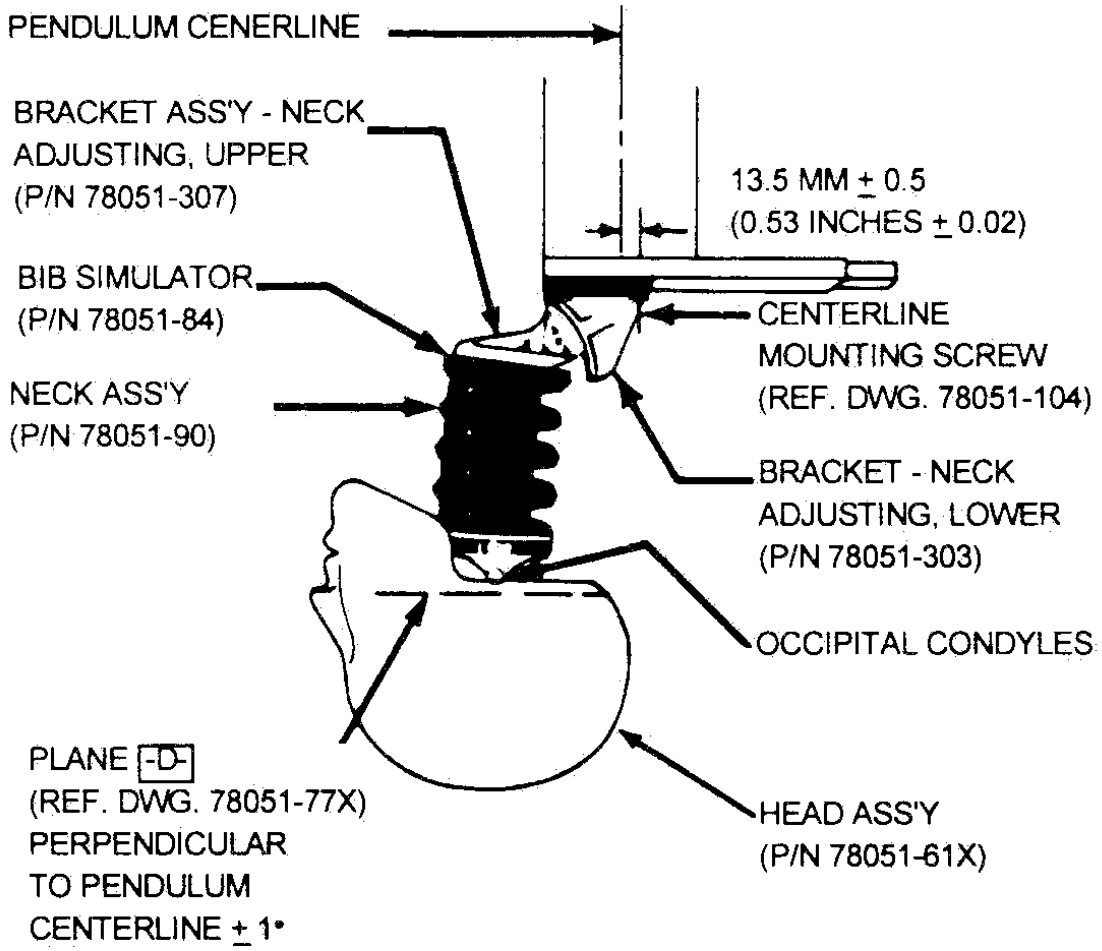

NOTE: PENDULUM SHOWN AT TIME ZERO POSITION

FIGURE 9A

EXTENSION - TEST SET-UP SPECIFICATIONS

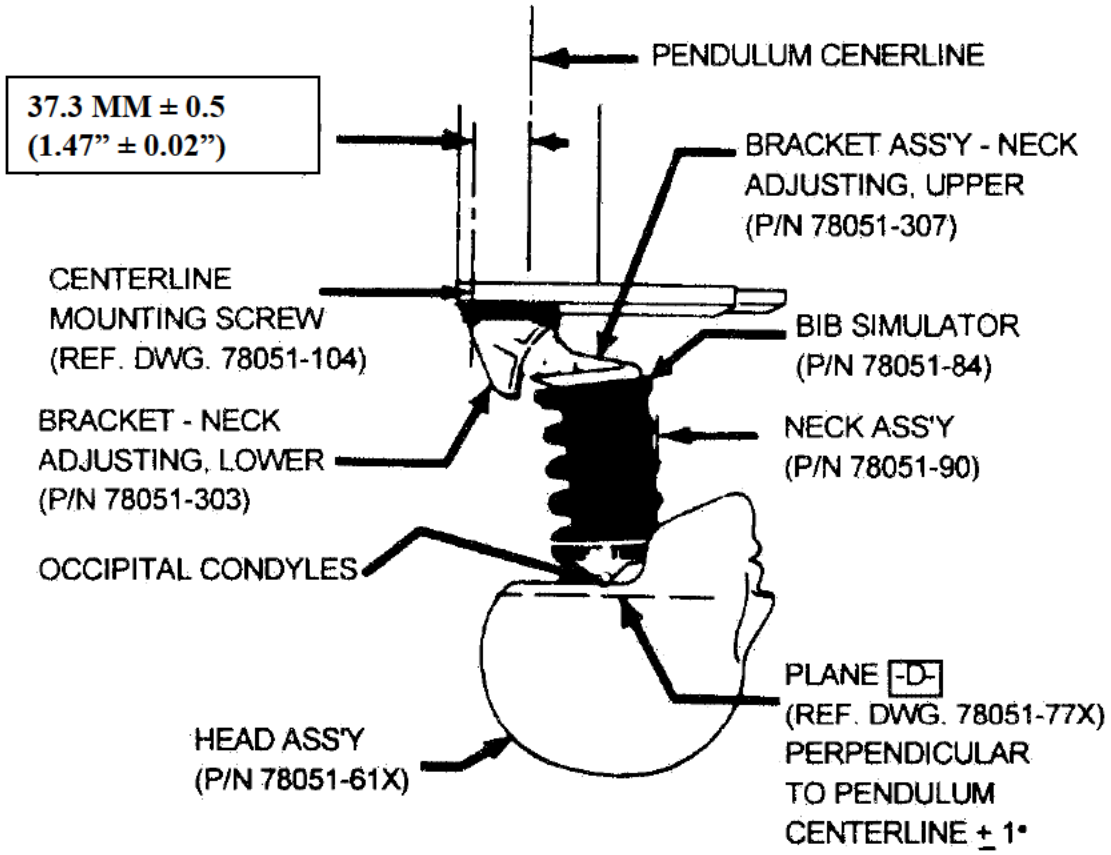

NOTE: PENDULUM SHOWN AT TIME ZERO POSITION

FIGURE 10A

ROTATION TRANSDUCER ASSEMBLY

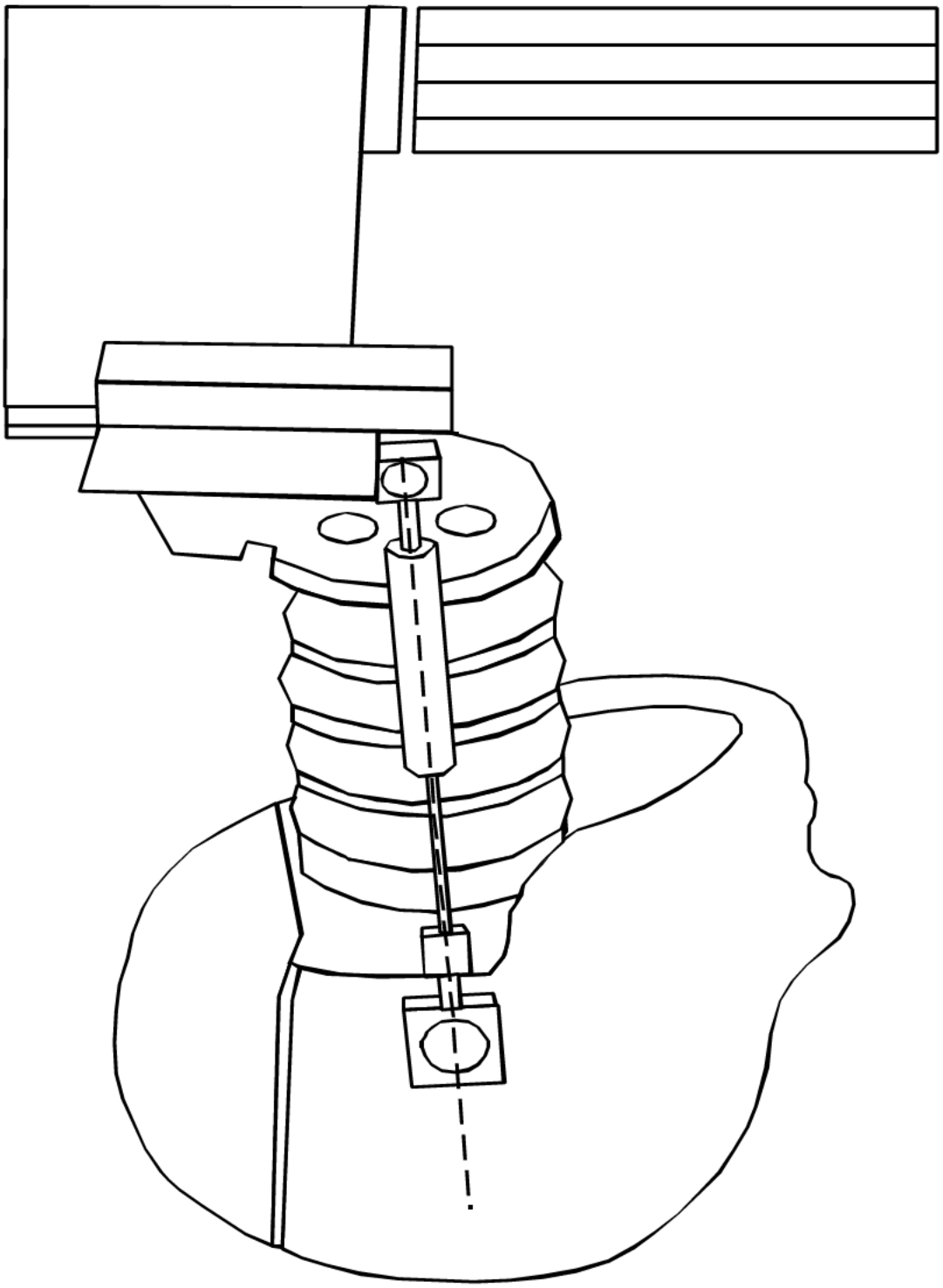

FIGURE 11A

DATA SHEET A6
THORAX IMPACT TEST (572.34) (50th Male)

Dummy Serial Number _____ Test Date _____

Technician _____

__Pretest calibration
__Post test calibration verification

Test attempt no. ____ (when successive thorax impact tests are necessary)

__1. It has been at least 30 minutes since the last thorax impact test. (572.137(q))
__ N/A, ONLY one thorax impact test performed
__2. The test fixture conforms to the specifications in Figure 12A.
__3. The complete assembled dummy (78051-218) is used (572.34(b)) and is dressed in a form fitting cotton stretch above-the-elbow sleeved shirt and above-the-knee pants. No shoes are worn. (572.34(b))
__4. The dummy assembly soaked at a temperature between 20.6°C (69ºF) and 22.2°C (72ºF) and at a relative humidity from 10% to 70% for a period of at least four (4) hours prior to this test. (572.34(c)(1))
Record the maximum temperature _____
Record the minimum temperature _____
Record the maximum humidity _____
Record the minimum humidity _____
__5. Remove the chest skin and visually inspect the thorax assembly for cracks, cuts, abrasions, etc. Particular attention should be given to the rib damping material (78051-17 thru 78051-22), chest displacement transducer assembly (78051-317) and the rear rib supports (78051-304). Inspect for rib deformation using the chest depth gage (83-5006-007). If any damage is noted repair and/or replace the damaged components unless the damage resulted from the vehicle crash test in which the dummy was an occupant in which case the damage must be documented and post test calibration verification testing completed before any repairs or replacements are made.
__ - No damage
__ - Damage from crash test, no repairs or replacement because this is a post-test calibration verification. Record damage _____
_____
__ - The following repairs or replacement was performed. Record _____
_____
_____
__6. Seat the dummy, (chest skin still removed) without back and arm supports on the test fixture surface as shown in Figure 12A. The surface must be long enough to support the pelvis and outstretched legs. (572. 34(c)(2))
__7. Level the ribs both longitudinally and laterally ± 0.5º and adjust the pelvis angle to 13º ± 2º. The angle may be measured using the special H-point tool (78051-532) that inserts

into the pelvic structure and extends outward beyond the pelvic skin surface or by using the surface of the pelvic adaptor block. (572.34(c)(2)

__8. The midsagittal plane of the dummy is vertical within ± 1º. (572.134(c)(3))

__9. The longitudinal centerline of the test probe is centered within ±2.5 mm of the midsagittal plane of the dummy and is 12.7 mm ± 1mm below the horizontal peripheral centerline of the No. 3 rib and is within 0.5º of a horizontal line in the dummy's midsagittal plane. (572.34(c)(4))

__10. Align the adjustable neck bracket index marks to the "zero" position. (Figure 12A)

__11. Record locations such as the rear surfaces of the thoracic spine and the lower neck bracket reference with respect to locations such as the rear surfaces of the thoracic spine and the lower neck bracket. These reference measurements are necessary to ensure the dummy is in the same position after the chest skin is installed. The reference locations must be accessible after installation of the chest skin. It may be necessary to leave the chest skin zipper unfastened until the references are checked and fasten it just prior to the test.

__12. Install the chest skin and reposition the dummy as described in the preceding paragraph using the reference measurements recorded.

__13. Place the arm assemblies horizontal ± 2º and parallel to the midsagittal plane. The arms are held in place by tightening the adjustment nut that holds the arm yoke to the clavicle assembly.

__14. The data acquisition system, including transducers, must conform to the requirements of SAE Recommended Practice J211/1 MAR95 Class 180.

__15. Impact the anterior surface of the thorax with the test probe so the longitudinal centerline of the probe is within 2º of a horizontal line in the dummy's midsagittal plane at the moment of impact. (572.34(c)(5)) The velocity of the test probe at the time of impact is 22 f/s ± 0.4 f/s. (572.34(b)) The probe is guided so there is no significant lateral, vertical or rotational movement during the impact. (572.34(c)(6)

__16. Complete the following table:

Thorax Impact Results (572.34(b))

Parameter*	Specification	Result
Test Probe Speed	21.6 f/s ≤ speed ≤ 22.4 f/s	
Chest Compression	2.5 in. ≤ compression ≤ 2.86 in.	
Peak resistance force**	1160 lb ≤ peak force ≤ 1325 lb	
Internal Hysteresis***	69% ≤ hysteresis ≤ 85%	

*Time zero is defined as the time of initial contact between the test probe and the chest skin.
**Force = impactor mass x acceleration (572.34(b))
***Area under loading curve minus the area under the unloading curve divided by the area under the loading curve.

__17. Plots of chest compression, pendulum acceleration, pendulum speed, and force, follow this sheet.

_____ _____
Signature Date

TEST SET-UP SPECIFICATIONS

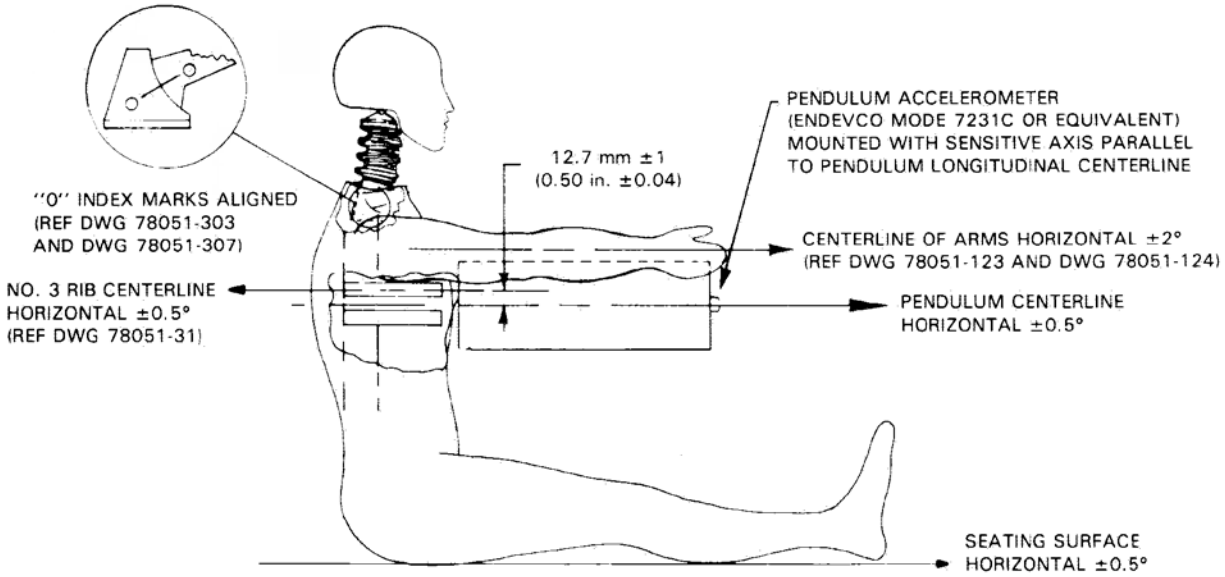

NOTE: A) NO EXTERNAL SUPPORT IS REQUIRED ON THE DUMMY TO MEET SETUP SPECIFICATIONS

B) THE MIDSAGITTAL PLANE OF THE DUMMY IS VERTICAL (±1°) AND WITHIN 2° OF THE CENTERLINE OF THE PENDULUM

C) THE MIDSAGITTAL PLANE OF THE DUMMY IS CENTERED ON THE CENTERLINE OF THE PENDULUM WITHIN 3 mm (0.12 in.)

FIGURE 12A

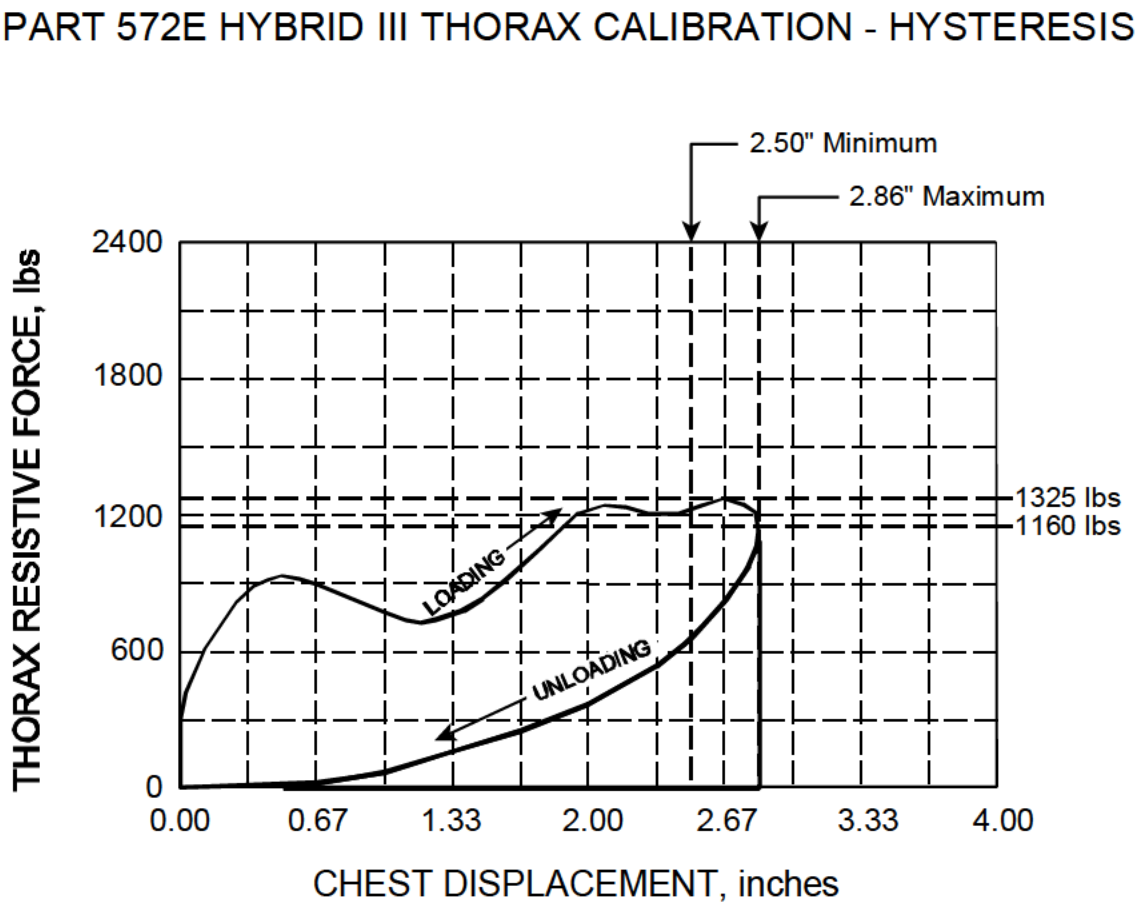
PART 572E HYBRID III THORAX CALIBRATION - HYSTERESIS
2.50" Minimum
2.86" Maximum
2400
1800
1200
600
0
1325 lbs
1160 lbs
LOADING
UNLOADING
THORAX RESISTIVE FORCE, lbs
0.00
0.67
1.33
2.00
2.67
3.33
4.00
CHEST DISPLACEMENT, inches

FIGURE 13A

DATA SHEET A7
LEFT KNEE IMPACT TEST (572.35) (50th Male)

Dummy Serial Number _____ Test Date _____

Technician _____

__Pretest calibration
__Post test calibration verification

Test attempt no. ____ (when successive knee impact tests are necessary)

__1. It has been at least 30 minutes since the last knee impact test. (572.36(m))
__ N/A, ONLY one knee impact test performed
__2. The test fixture conforms to the specifications in Figure 14A.
__3. The leg assembly (86-5001-001) with the upper leg assembly (78051-46) removed, and the load cell simulator (78051-319) is used. (572.35(b)(2))
__4. The knee assembly soaked at a temperature between 18.9°C (66ºF) and 25.6°C (78ºF) and at a relative humidity from 10% to 70% for a period of at least four (4) hours prior to this test. (572.35(b)(2)(ii))
Record the maximum temperature _____
Record the minimum temperature _____
Record the maximum humidity _____
Record the minimum humidity _____
__5. Mount the test specimen and secure it to the rigid test fixture. (572.35(b)(2)(iii)) (Figure 14A)
__6. No parts of the foot or tibia contact any exterior surface. (572.35(b)(2)(iii))
__7. Align the test probe so that at contact the longitudinal centerline of the probe is collinear within 2 degrees with the longitudinal centerline of the femur load cell simulator except it is within 0.5 degrees horizontally. (572.35(b)(2)(iv)&(vi))
__8. The probe is guided so there is no significant lateral, vertical or rotational movement during the impact with the knee. (572.35(b)(2)(v))
__9. The data acquisition system, including transducers, must conform to the requirements of SAE Recommended Practice J211/1 MAR95 (572.136(m)) Class 600.
__10. Contact the knee with the test probe at a speed between 6.8 ft/s and 7.0 ft/s. (572.35(b))
__11. Complete the following table:

Knee Impact Results (572.35(b)(1)

Parameter	Specification	Result
Probe speed	6.8 ft/s ≤ speed ≤ 7.0 ft/s	
Peak resistance force*	1060 lb ≤ force ≤ 1300 lb	

*Force = impactor mass x deceleration (572.35(b)(1))

__12. Plots of pendulum acceleration, pendulum speed, and force, follow this sheet. Time zero is defined as the time of contact between the test probe and the knee. (572.3(b)(2)(vii))

_____ _____

Signature Date

DATA SHEET A8
RIGHT KNEE IMPACT TEST (572.35) (50th Male)

Dummy Serial Number _____ Test Date _____

Technician _____

__Pretest calibration
__Post test calibration verification

Test attempt no. ____ (when successive knee impact tests are necessary)

__1. It has been at least 30 minutes since the last knee impact test. (572.36(m))
__ N/A, ONLY one knee impact test performed
__2. The test fixture conforms to the specifications in Figure 14A.
__3. The leg assembly (86-5001-002) with the upper leg assembly (78051-47) removed, and the load cell simulator (78051-319) is used. (572.35(b)(2))
__4. The knee assembly soaked at a temperature between 18.9°C (66ºF) and 25.6°C (78ºF) and at a relative humidity from 10% to 70% for a period of at least four (4) hours prior to this test. (572.35(b)(2)(ii))
Record the maximum temperature _____
Record the minimum temperature _____
Record the maximum humidity _____
Record the minimum humidity _____
__5. Mount the test specimen and secure it to the rigid test fixture. (572.35(b)(2)(iii)) (Figure 14A)
__6. No parts of the foot or tibia contact any exterior surface. (572.35(b)(2)(iii))
__7. Align the test probe so that at contact the longitudinal centerline of the probe is collinear within 2 degrees with the longitudinal centerline of the femur load cell simulator except it is within 0.5 degrees horizontally. (572.35(b)(2)(iv)&(vi))
__8. The probe is guided so there is no significant lateral, vertical or rotational movement during the impact with the knee. (572.35(b)(2)(v))
__9. The data acquisition system, including transducers, must conform to the requirements of SAE Recommended Practice J211/1 MAR95 (572.136(m)) Class 600.
__10. Contact the knee with the test probe at a speed between 6.8 ft/s and 7.0 ft/s. (572.35(b))
__11. Complete the following table:

Knee Impact Results (572.35(b)(1)

Parameter	Specification	Result
Probe speed	6.8 ft/s ≤ speed ≤ 7.0 ft/s	
Peak resistance force*	1060 lb ≤ force ≤ 1300 lb	

*Force = impactor mass x deceleration (572.35(b)(1))

__12. Plots of pendulum acceleration, pendulum speed, and force, follow this sheet. Time zero is defined as the time of contact between the test probe and the knee. (572.3(b)(2)(vii))

_____ _____

Signature Date

TEST SET-UP SPECIFICATIONS

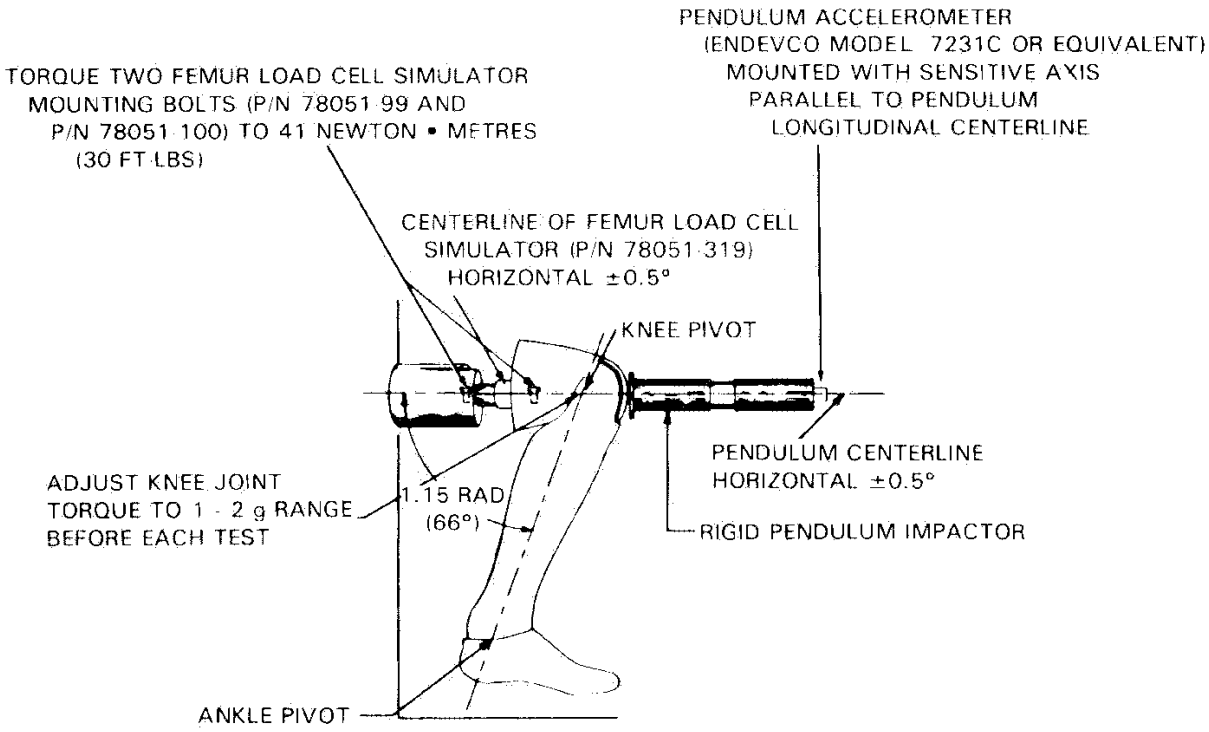

FIGURE14A

DATA SHEET A9
HIP JOINT-FEMUR FLEXION (572.35(c)) (50th Male)

Dummy Serial Number _____ Test Date _____

Technician _____

__Pretest calibration
__Post test calibration verification

Test attempt no. ____ (when successive hip joint-femur flexion tests are necessary)

__1. It has been at least 30 minutes since the last hip joint-femur flexion test. (572.36(m))
__ N/A, ONLY one hip joint-femur flexion test performed
__2. The test fixture conforms to the specifications in Figure 17A.
__3. Use the assembled dummy (78051-218) except (572.35(c)(2)):
__3.1 remove the leg assemblies (86-5001-001 & 002) by removing 3/8-16 Socket Head Cap Screw and retaining the structural assembly of the upper legs (78051-43 & 44)
__3.2 remove the abdominal insert (78051-52)
__3.3 replace the instrument cover plate (78051-13) in the pelvic bone with a rigid pelvic bone stabilizer insert (Figure 15A) and attach the pelvis upper support device (Figure 16A).
__4. The assembly soaked at a temperature between 18.9°C (66ºF) and 25.6°C (78ºF) and at a relative humidity from 10% to 70% for a period of at least four (4) hours prior to this test. (572.35(c)(v))
Record the maximum temperature _____
Record the minimum temperature _____
Record the maximum humidity _____
Record the minimum humidity _____
__5. Seat the dummy on the rigid seat fixture. (572.35(c)(2)(ii))
__6. Secure the dummy by bolting the stabilizer insert and the pelvis upper support device to the seat back of the test fixture as shown in Figures 17A, 18A, and 19A. (572.35(c)(2)(ii))
__7. Adjust the threaded rods until plane B is horizontal.
__8. Secure the lever arm into the left femur shaft opening of the upper leg structure assembly (78051-43) and firmly secure it using the 3/8-16 socket head cap screws (Figure 19A). (572.35(c)(2)(iii))
__9. Lift the lever arm parallel to the midsagittal plane at a rotation rate between 5 and 10 degrees per second while maintaining the ½ in. shoulder bolt longitudinal centerline horizontal throughout the range of motion until the 150 ft-lbf torque level is reached (Figures 18A and 19A). (572.35(c)(2)(iv))

__10. Complete the following table:
Left Hip Joint-Femur Flexion Results (572.35(c)(1) & (c)(2)(iv))

Parameter	Specification	Result
Rotation Rate	$5^o \leq$ rotation rate $\leq 10^o$	
Femur Torque at 30°	torque $\leq$ 70 ft-lbf	
Rotation at 150 lbf-ft	$40^o \leq$ rotation $\leq 50^o$	

__11. Secure the lever arm into the right femur shaft opening of the upper leg structure assembly (78051-44) and firmly secure it using the 3/8-16 socket head cap screws (Figure 19A). (572.35(c)(2)(iii))

__12. Lift the lever arm parallel to the midsagittal plane at a rotation rate between 5 and 10 degrees per second while maintaining the ½ in. shoulder bolt longitudinal centerline horizontal throughout the range of motion until the 150 ft-lbf torque level is reached (Figures 18A and 19). (572.35(c)(2)(iv))

__13. Complete the following table:
Right Hip Joint-Femur Flexion Results (572.35(c)(1) & (c)(2)(iv))

Parameter	Specification	Result
Rotation Rate	$5^o \leq$ rotation rate $\leq 10^o$	
Femur Torque at 30°	torque $\leq$ 70 ft-lbf	
Rotation at 15 lbf-ft	$40^o \leq$ rotation $\leq 50^o$	

_____ _____
Signature Date

PELVIC BONE STABLIZER INSERT

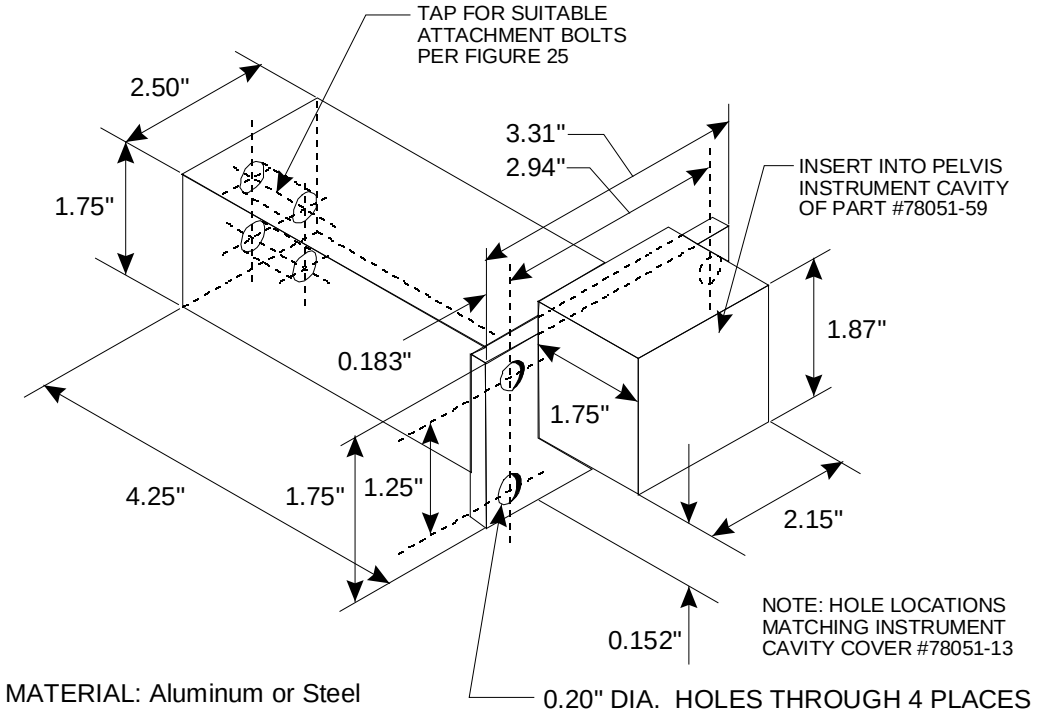

FIGURE 15A

PELVIS UPPER SUPPORT DEVICE

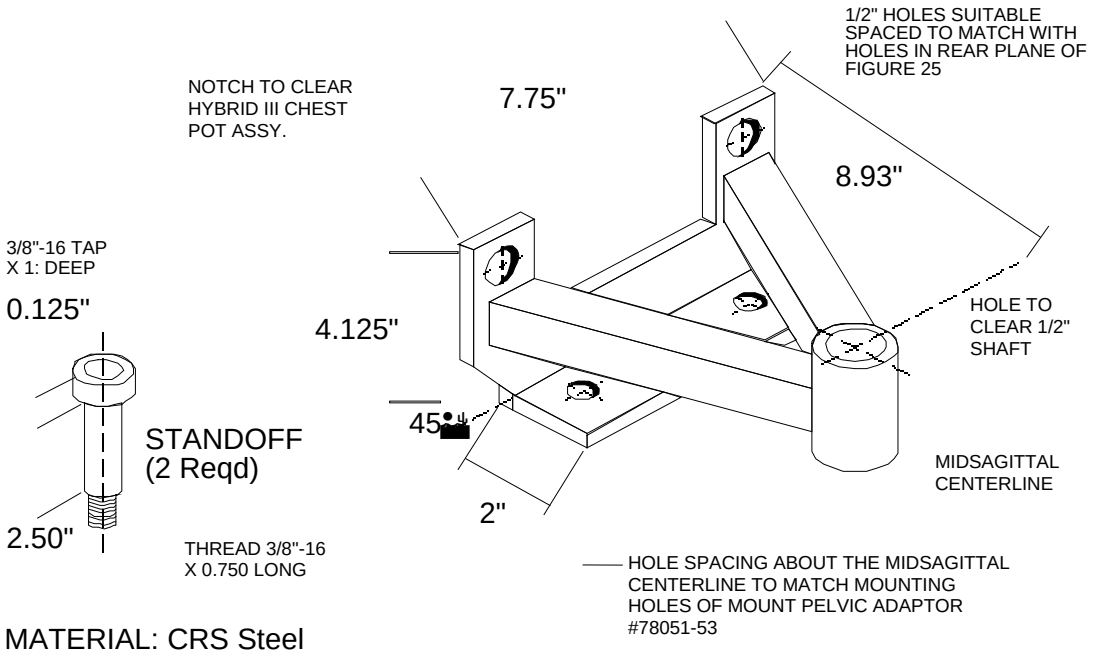

FIGURE 16A

HIP-JOINT TEST FIXTURE ASSEMBLY

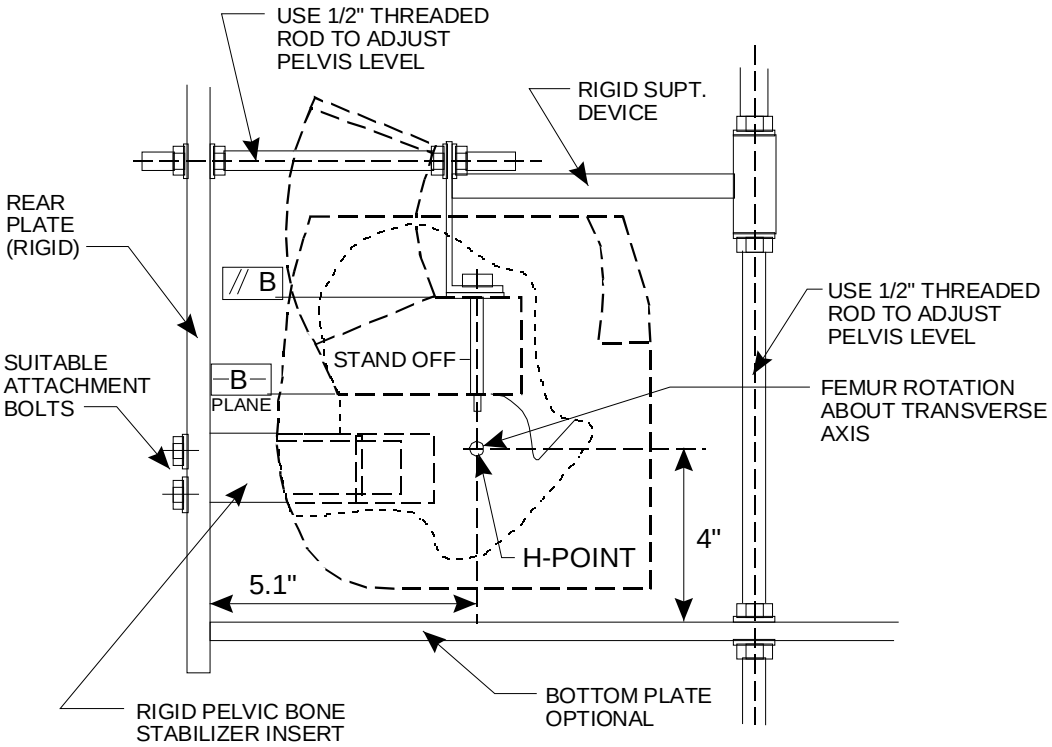

FIGURE 17A

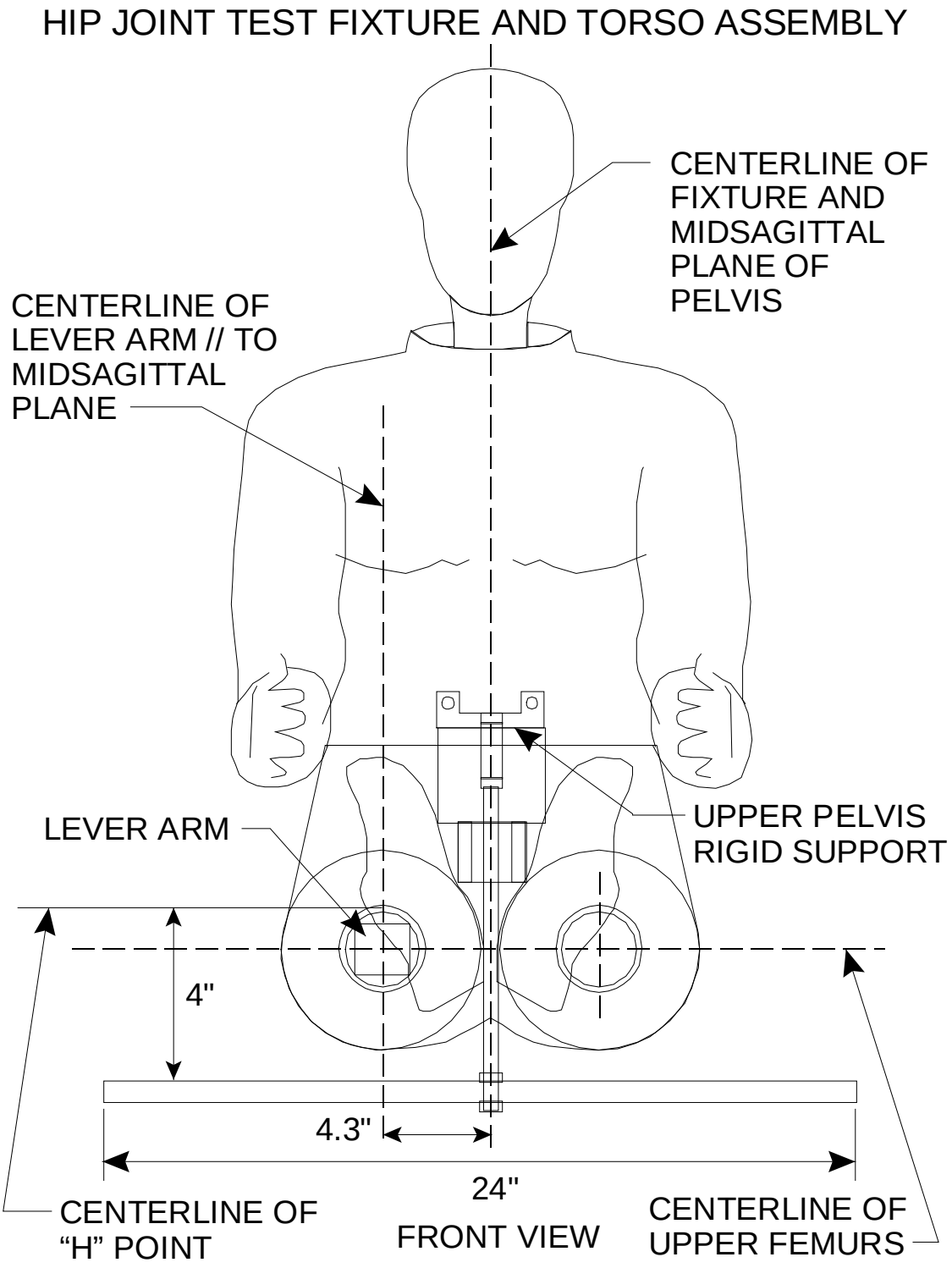
HIP JOINT TEST FIXTURE AND TORSO ASSEMBLY
CENTERLINE OF FIXTURE AND MIDSAGITTAL PLANE OF PELVIS
CENTERLINE OF LEVER ARM // TO MIDSAGITTAL PLANE
UPPER PELVIS RIGID SUPPORT
LEVER ARM
4"
4.3"
24"
CENTERLINE OF "H" POINT
FRONT VIEW
CENTERLINE OF UPPER FEMURS

FIGURE 18A

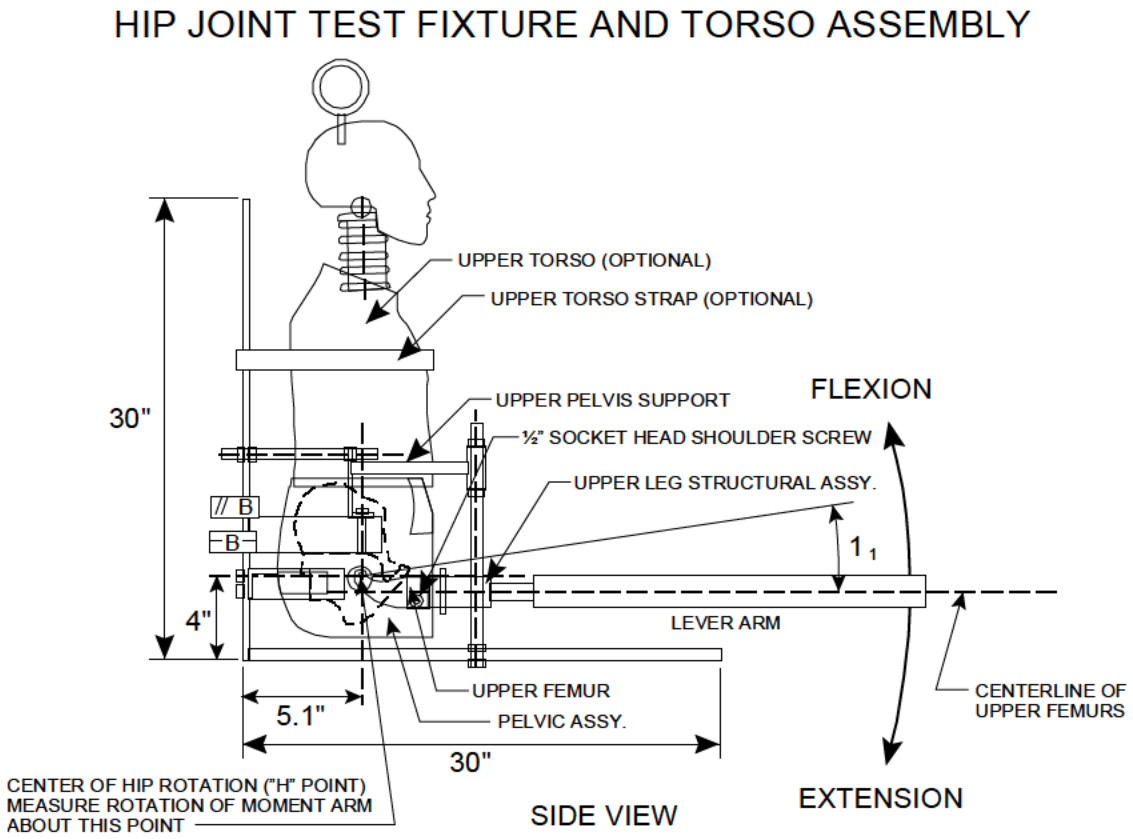
HIP JOINT TEST FIXTURE AND TORSO ASSEMBLY
UPPER TORSO (OPTIONAL)
UPPER TORSO STRAP (OPTIONAL)
UPPER PELVIS SUPPORT
½" SOCKET HEAD SHOULDER SCREW
UPPER LEG STRUCTURAL ASSY.
FLEXION
30"
// B
B
1 1
4"
LEVER ARM
UPPER FEMUR
PELVIC ASSY.
5.1"
30"
CENTERLINE OF UPPER FEMURS
CENTER OF HIP ROTATION ("H" POINT) MEASURE ROTATION OF MOMENT ARM ABOUT THIS POINT
SIDE VIEW
EXTENSION

FIGURE 19A

DATA SHEET A10
PART 572 INSTRUMENTATION CALIBRATION INFORMATION

I.D. NO.	MANUFACTURER	MODEL NO.	SERIAL NO.	DATE OF LAST CALIBRATION	DATE OF NEXT CALIBRATION
DUMMY INSTRUMENTATION					
HEAD ACCELEROMETERS					
(1) LONGITUDINAL					
(2) LATERAL					
(3) VERTICAL					
NECK TRANSDUCER					
CHEST ACCELEROMETERS					
(1) LONGITUDINAL					
(2) LATERAL					
(3) VERTICAL					
CHEST POTENTIOMETER					
FEMUR LOAD CELLS					
(1) RIGHT FEMUR					
(2) LEFT FEMUR					
LABORATORY INSTRUMENTATION					
NECK PENDULUM ACCELEROMETER					
THORAX PENDULUM ACCELEROMETER					
KNEE PENDULUM ACCELEROMETER					
NECK ROTATION TRANSDUCER 1 (OPTIONAL)					
NECK ROTATION TRANSDUCER 2 (OPTIONAL)					

LABORATORY TECHNICIAN: _____

APPENDIX B

PART 572O (5th PERCENTILE FEMALE) DUMMY PERFORMANCE CALIBRATION TEST PROCEDURE

APPENDIX B
PART 572, SUBPART O DUMMY PERFORMANCE CALIBRATION TEST PROCEDURE

1. PURPOSE AND APPLICATION 1
2. GENERAL REQUIREMENTS 1
3. SECURITY 1
4. GOOD HOUSEKEEPING 2
5. TEST SCHEDULING AND MONITORING 2
6. TEST DATA DISPOSITION 2
7. GOVERNMENT FURNISHED PROPERTY (GFP) 3
8. CALIBRATION AND TEST INSTRUMENTATION 3
9. PHOTOGRAPHIC DOCUMENTATION 4
10. DEFINITIONS 4
11. PRETEST REQUIREMENTS 5
    11.1 TRANSDUCER REQUIREMENTS 5
    11.2 OTHER TRANSDUCER CONDITIONS 6
    11.3 THORAX IMPACTOR PROBE (572.137(a)) 6
    11.4 KNEE IMPACTOR PROBE (572.137(b)) 7
    11.5 GENERAL TEST CONDITIONS 10
12. CALIBRATION TEST EXECUTION 10
13. POST TEST REQUIREMENTS 10
14. REPORTS 10
    14.1 APPARENT NONCONFORMANCE 10
    14.2 CALIBRATION DOCUMENTATION 11
15. DATA SHEETS 12
    DATA SHEET B1 12
    DATA SHEET B2 14
    DATA SHEET B3 21
    DATA SHEET B4 25
    DATA SHEET B5 27
    DATA SHEET B6 33
    DATA SHEET B7 38
    DATA SHEET B8 41
    DATA SHEET B9 43
    DATA SHEET B10 46

1. PURPOSE AND APPLICATION

The purpose of this laboratory procedure is to provide dummy users (independent testing laboratories under contract with the Office of Crashworthiness Standards) with standard test procedures for performing receiving-inspection and performance calibration tests on the Part 572, Subpart O dummy so that repetitive and correlative test results can be obtained. The following tests have been developed to establish a uniform calibration procedure for all users as the means of verifying the performance of the dummy.

A. EXTERNAL DIMENSIONS (drawing 880105-000-XH pg. 5 of 6, & PADI)

B. HEAD DROP TEST (572.132)

C. NECK FLEXION TEST (572.133(b)(1))

D. NECK EXTENSION TEST 572.133(b)(2)

E. THORAX IMPACT TEST ((572.134)

F. TORSO FLEXION (572.135)

G. KNEE IMPACT TESTS (572.136)

This laboratory procedure for the calibration of Part 572, Subpart O dummies must be used by National Highway Traffic Safety Administration (NHTSA) contract laboratories performing NCAP testing for the Office of Crashworthiness Standards (OCWS).

2. GENERAL REQUIREMENTS

The Code of Federal Regulations (49CFR), Parts 571 and 572, was amended to adopt the Hybrid III, 5th Percentile Female Dummy. Each Part 572, Subpart O dummy used in an NCAP test must meet the specifications and performance criteria of Part 572 before and after each vehicle crash test in order to be an acceptable test tool.

The Part 572, Subpart O Hybrid III 5th Percentile Female Dummy consists of components and assemblies specified in the drawing and specifications package which is available from Reprographics Technologies, 9000 Virginia Manor, Beltsville, MD 20705,
telephone - (301) 419-5070.

3. SECURITY

All NHTSA Part 572, Subpart O test dummies delivered to the contract laboratory as Government Furnished Property (GFP) will be stored in a safe and secure area such as a dummy calibration laboratory. The contractor is financially responsible for any acts of theft and/or vandalism which occur during the storage of GFP. Any security problems shall be reported by telephone to the Industrial Property Manager (IPM), Office of Contracts and Procurement, within two working days after the incident. A letter containing specific details of the security problem will be sent to the IPM (with copy to the COTR) within 48 hours.

The contractor is responsible for maintaining the NHTSA test dummies in good working order, and shall protect and segregate the data that evolves from conducting Part 572, Subpart O dummy calibration tests before and after each vehicle test usage.

No information concerning the Part 572, Subpart O dummy calibration data shall be released to anyone except the COTR, unless specifically authorized by the COTR or the COTR's Branch or Division Chief.

NOTE: No individuals other than contractor personnel directly involved in the dummy calibration test program, shall be allowed to witness dummy calibration tests unless specifically authorized by the COTR.

4. GOOD HOUSEKEEPING

Contractors shall maintain the entire dummy calibration laboratory, test fixtures, and instrumentation in a neat, clean, and painted condition with test instruments arranged in an orderly manner consistent with good test laboratory housekeeping practices.

5. TEST SCHEDULING AND MONITORING

The Part 572, Subpart O dummies are being calibrated as test tools to be used in NCAP vehicle crash tests. The schedule for these performance calibration tests must be correlated with that of the vehicle tests. In addition, all testing shall be coordinated to allow monitoring by the COTR.

6. TEST DATA DISPOSITION

The contractor shall make all dummy calibration data available to the COTR for review and analysis as required. All calibration test data for each particular Part 572, Subpart O dummy will be sent to the COTR with each test report.

All backup data sheets, strip charts, recordings, plots, technicians’ notes, etc. shall be either sent to the COTR or destroyed at the conclusion of each delivery order, purchase order, etc.

7. GOVERNMENT FURNISHED PROPERTY (GFP)

Part 572, Subpart O test dummies will be furnished to the contract laboratory by the OCWS. The dummies shall be stored in an upright sitting position with the weight supported by the internal structure of the pelvises. The dummies' heads shall be held upright by using a strap around the chest or the base of the neck so that the neck is not supporting the weight of the dummy. The dummies shall be stored in a secured room that is kept between 55ºF and 85ºF. The contractor will check dummy components for damage after each crash test and complete a dummy damage checklist (as part of the NCAP procedure), which will be included with the dummy calibration, if requested. The COTR will be kept informed of the dummies' condition so that replacement parts can be provided. The dummies will be calibrated by the contractor according to the schedule indicated in the NCAP test procedure.

8. CALIBRATION AND TEST INSTRUMENTATION

Before the contractor initiates the dummy performance calibration test program, a test instrumentation calibration system must be implemented and maintained in accordance with established calibration practices. The calibration system shall be set up and maintained as follows:

A. Standards for calibrating the measuring and test equipment shall be stored and used under appropriate environmental conditions to assure their accuracy and stability.

B. All measuring instruments and standards shall be calibrated by the contractor, or a commercial facility, against a higher order standard at periodic intervals not exceeding 12 months for instruments and 12 months for calibration standards. Records, showing the calibration traceability to the National Institute of Standards and Technology (NIST), shall be maintained for all measuring and test equipment.

C. All measuring and test equipment and measuring standards shall be labeled with the following information:

1. Date of calibration

2. Date of next scheduled calibration

3. Name of the technician who calibrated the equipment

D. The contractor shall provide a written calibration procedure that includes, as a minimum, the following information for all measurement and test equipment:

1. Type of equipment, manufacturer, model number, etc.

2. Measurement range

3. Accuracy

4. Calibration interval

5. Type of standard used to calibrate the equipment (calibration traceability of the standard must be evident)

6. The actual procedures and forms used to perform calibrations.

E. The contractor shall keep records of calibrations for all test instrumentation in a manner that assures the maintenance of established calibration schedules. All such records shall be readily available for inspection when requested by the COTR. The calibration system will need the written acceptance of the COTR before testing begins.

F. Test equipment shall receive a calibration check immediately prior to and after each test. This check shall be recorded by the test technician(s) and submitted with the final report.

G. Anthropomorphic test devices shall be calibrated as indicated in NCAP test procedure. These calibrations shall be submitted with the final report.

9. PHOTOGRAPHIC DOCUMENTATION

Provide still photographs (color prints properly focused for clear images, no more than two (2) per 8.5”x11” sheet) of post test damage resulting from the vehicle crash test.

10. DEFINITIONS

PADI: Procedures for Assembly, Disassembly, and Inspection

11. PRETEST REQUIREMENTS

11.1 TRANSDUCER REQUIREMENTS

The contractor shall provide and install the following instrumentation to the GFP dummies (excluding the chest deflection transducer).

A. HEAD – The head accelerometers shall have dimensions, response characteristics and sensitive mass locations specified in drawing SA572-S4 and be mounted in the head as shown in drawing 880105-000 sheet 3 of 6. (572.137(c))

Three accelerometers shall be mounted in the head cavity to measure orthogonal accelerations (Ax, Ay, Az) at the center of gravity (CG) of the head assembly.

B. NECK – The upper neck force transducer shall have the dimensions, response characteristics, and sensitive axis locations specified in drawing SA572-S11 and shall be mounted in the head neck assembly as shown in drawing 880105-000, sheet 3 of 6. (572.137(d))

C. CHEST – The chest accelerometers shall have the dimensions, response characteristics, and sensitive mass locations specified in drawing SA572-S4 and be mounted in the torso assembly in traxial configuration within the spine box instrumentation cavity as shown drawing 880105-000 sheet 3 of 6. The chest accelerometers are not required for dummy calibration testing but are required for NCAP testing. (572.137(e))

The chest deflection transducer shall have the dimensions and response characteristics specified in drawing SA572-S51 and be mounted to the upper torso assembly as shown in drawings 880105-300 and 880105-000 sheet 3 of 6. (572.137(j))

D. LEGS -- The single axis femur force transducer shall have the dimensions, response characteristics, and sensitive axis locations specified in drawing SA572-S14 and be mounted in assemblies 880105-560-1 and 880105-560-2. The femur transducers are not required for calibration of the dummy but are required for NCAP testing. (572.137(i))

E. TEST FIXTURE – The neck pendulum, thorax and knee probe accelerometers shall have the dimensions and characteristics of drawing SA572-S4.

11.2 OTHER TRANSDUCER CONDITIONS

A. TRANSDUCER MOUNTS – The mountings for sensing devices shall have no resonance frequency less than 3 times the frequency range of the applicable channel class. (572.137(o))

B. TRANSDUCER SIGN CONVENTION - The sign convention for outputs of transducers mounted within the dummy that measure head and chest accelerations, chest deflection and femur loads are located in Figure 1B. For other transducers see SAE J1733DEC94. (572.137(n))

C. TRANSDUCER OUTPUT FILTERING - The outputs of acceleration and force-sensing devices installed in the dummy and in the test apparatus specified by this part are recorded with individual data channels. Each data channel will be comprised of a sensor, signal conditioner, data acquisition device, and all interconnecting cables, and must conform to the requirements of SAE Recommended Practice J211/1 MAR95, "Instrumentation for Impact Test," with channel classes as follows: (572.137(m))

(1) Head acceleration Class 1000 (572.137(m)(1))
(2) Neck force Class 1000 (572.137(m)(2)(i)) except use Class 600 for calculation of neck moment about the occipital condyle
(3) Neck moment Class 600 (572.137(m)(2)(ii))
(4) Neck pendulum acceleration Class 180 (572.137(m)(2)(iii))
(5) Neck rotation transducers Class 60 (572.137(m)(2)(iv))
(6) Thorax and thorax pendulum acceleration Class 180 (572.137(m)(3)(ii))
(7) Thorax deflection Class 600 (572.137(m)(3)(iii))
(8) Knee pendulum acceleration Class 600 (572.137(m)(6))
(9) Femur force Class 600 (572.137(m)(6))

All filter classes should be of the "phaseless" type to be compatible with the "time" dependent test parameters.

11.3 THORAX IMPACTOR PROBE (572.137(a))

A. The test probe for thoracic impacts shall be of rigid metallic construction, concentric about its longitudinal axis.
B. It shall have a mass of 13.97 ± 0.023 kg (30.8 ± 0.05 lbs). 1/3 of the weight of the suspension cables and any attachments to the impact probe must be included in the calculation of mass, and such components may not exceed 5 percent of the total weight of the test probe.
C. It shall have a minimum mass moment of inertia of 3646 kg-cm^2 (3.22 lbs-in-sec^2) in yaw and pitch about the center of gravity.

D. The impacting end of the probe is perpendicular to and concentric with the longitudinal axis. It must have a flat, continuous, and non-deformable face with diameter of 152.4 ± 0.25 mm (6.00 ± 0.01 in) and a maximum edge radius of 7.6-12.7 mm (0.3-0.5 in).
E. The impactor is a cylinder with a diameter of 152.4-152.6 mm (6.0-6.1 in) and it is at least 25 mm (1.0 in) long.
F. The probe's end opposite to the impact face must have provisions for mounting of an accelerometer with its sensitive axis collinear with the longitudinal axis of the probe.
G. The impact probe shall have a free air resonant frequency of not less than 1000 Hz.

11.4 KNEE IMPACTOR PROBE (572.137(b))

A. The test probe for knee impacts shall be of rigid metallic construction, concentric about its longitudinal axis.
B. It shall have a mass of 2.99 ± 0.01 kg (6.6 ± 0.022 lbs). 1/3 of the weight of the suspension cables and any attachments to the impact probe must be included in the calculation of mass, and such components may not exceed 5 percent of the total weight of the test probe.
C. It shall have a minimum mass moment of inertia of 209 kg-cm^2 (0.177 lbs-in-sec^2) in yaw and pitch about the center of gravity.
D. The impacting end of the probe is perpendicular to and concentric with the longitudinal axis. It must have a flat, continuous, and non-deformable face with a diameter of 76.2 ± 0.2mm (3.00 ± 0.01 in) and a maximum edge radius of 7.6-12.7 mm (0.3-0.5 in).
E. The impactor is a cylinder with a diameter of 76.2 –76.4 mm (3.00 –3.1 in) and it is at least 12.5 mm (1.0 in) long.
F. The probe's end opposite to the impact face must have provisions for mounting of an accelerometer with its sensitive axis collinear with the longitudinal axis of the probe.
G. The impact probe shall have a free air resonant frequency of not less than 1000 Hz.

SIGN CONVENTIONS FOR PART 572 SUBPART E TEST DUMMIES

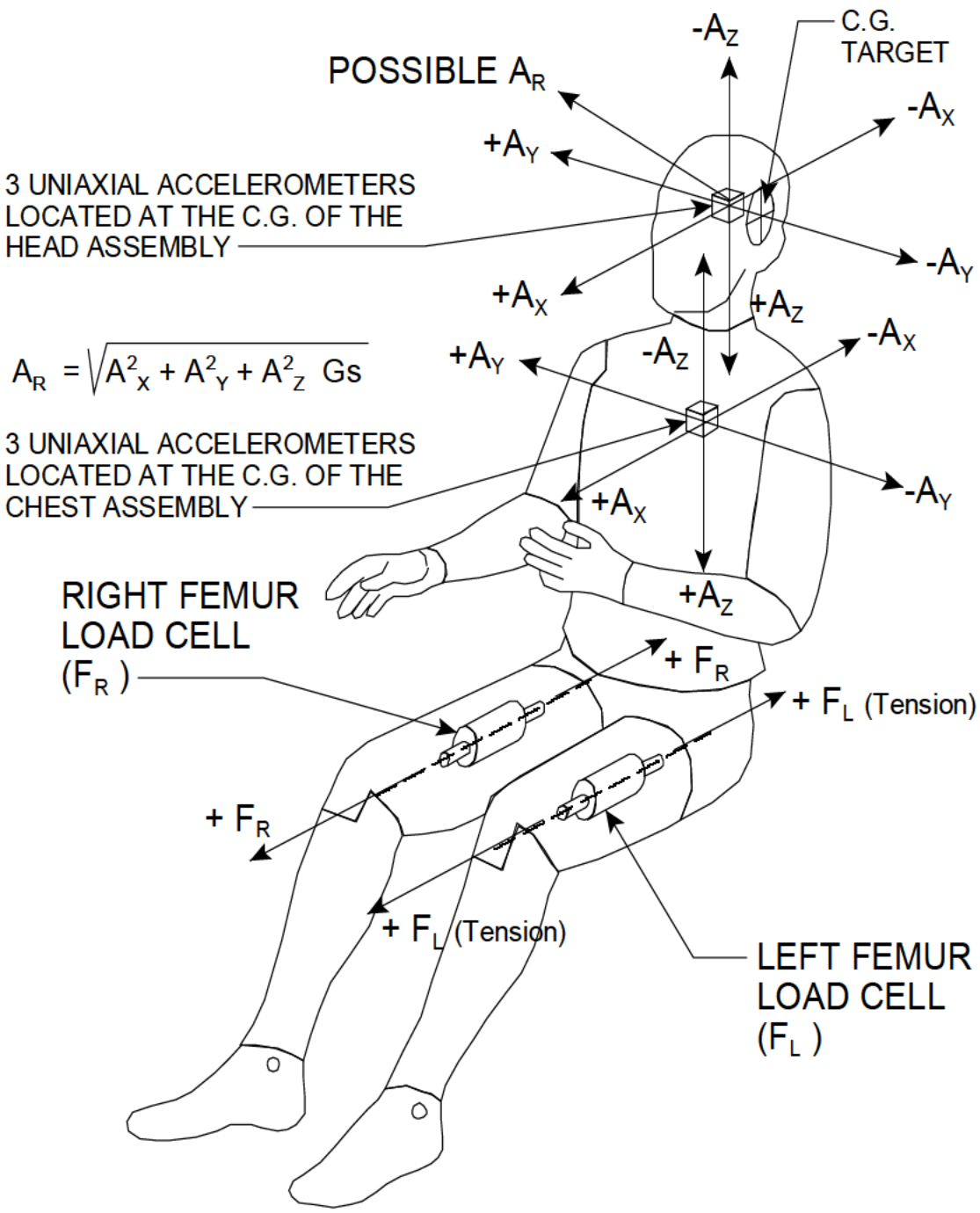

FIGURE 1B

TABLE 1B

SIGN CONVENTION FOR HYBRID III TRANSDUCER OUTPUTS	
BODY SEGMENT — MEASURED FORCE	**POSITIVE OUTPUT DIRECTION**
NECK FX SHEAR FY SHEAR FZ AXIAL MX MOMENT (ROLL) MY MOMENT (PITCH) MZ MOMENT (YAW)	 HEAD REARWARD OR CHEST FORWARD HEAD LEFTWARD, CHEST RIGHTWARD HEAD UPWARD, CHEST DOWNWARD LEFT EAR TOWARD LEFT SHOULDER CHIN TOWARD STERNUM CHIN TOWARD LEFT SHOULDER
FEMUR FX SHEAR FY SHEAR FZ AXIAL MX MOMENT (ROLL) MY MOMENT (PITCH) MZ MOMENT (YAW)	 KNEE UPWARD, UPPER FEMUR DOWNWARD KNEE RIGHTWARD, UPPER FEMUR LEFTWARD KNEE FORWARD (TENSION), PELVIS REARWARD KNEE LEFTWARD, HOLD UPPER FEMUR IN PLACE KNEE UPWARD, HOLD UPPER FEMUR IN PLACE KNEE ROTATED CCW WHEN FACING FRONT OF DUMMY
KNEE CLEVIS - FZ AXIAL	TIBIA DOWNWARD (TENSION), FEMUR UPWARD
UPPER TIBIA MX MOMENT MY MOMENT	 ANKLE LEFTWARD, HOLD KNEE IN PLACE ANKLE FORWARD, BOTTOM OF KNEE CLEVIS REARWARD
LOWER TIBIA FX SHEAR FY SHEAR FZ AXIAL MX MOMENT MY MOMENT	 ANKLE FORWARD, KNEE REARWARD ANKLE RIGHTWARD, KNEE LEFTWARD ANKLE DOWNWARD (TENSION), KNEE UPWARD ANKLE LEFTWARD, HOLD KNEE IN PLACE ANKLE FORWARD, BOTTOM OF KNEE CLEVIS REARWARD
CHEST DISPLACEMENT	CHEST COMPRESSED - NEGATIVE
KNEE SHEAR DISPLACEMENT	PUSH ON FRONT OF TIBIA - NEGATIVE

NOTE: DIRECTIONS ARE DEFINED IN RELATION TO A SEATED DUMMY

11.5 GENERAL TEST CONDITIONS

A. Surfaces of dummy components are not painted unless otherwise specified. (572.137(r))

B. Dummy performance tests of the same component, segment, assembly, or fully assembled dummy are separated in time by a period of not less than 30 minutes unless otherwise specified. (572.137(q))

C. Except for neck assembly and thorax assembly testing, the dummy performance tests are conducted at any temperature from 18.9^{o}C (66ºF) to 25.6^{o}C (78ºF) and at any relative humidity from 10% to 70% after exposure of the dummy to these conditions for a period of not less than 4 hours. For the neck assembly and thorax assembly, the temperature range is 20.6^{o}C (69ºF) to 22.2^{o}C (72ºF).

D. Dummy limb joints are set at 1G, barely restraining the weight of the limb when it is extended horizontally. The force required to move a limb segment does not exceed 2 Gs throughout the range of limb motion. (572.137(p)) Also see Appendix B of the PADI for guidelines for setting the joints to 1G.

E. Dummies will be clothed for the thorax calibration tests with a form fitting cotton stretch above-the-elbow sleeved shirt and above-the-knee pants. The weight of the shirt and pants shall not exceed 0.14 kg (0.30 lb) each. (572.134(c)(1))

12. CALIBRATION TEST EXECUTION

Complete the Data Sheets in section 15.

13. POST TEST REQUIREMENTS

The contractor shall verify all instrumentation and check data sheets and photographs. Make sure data is recorded in all data blocks on every performance calibration test data sheet.

14. REPORTS

14.1 APPARENT NONCONFORMANCE

During calibration verification, any indication of apparent nonconformance to the requirements of Regulation P572 shall be communicated by telephone to the COTR within 24 hours with written notification mailed within 48 hours (Saturdays and Sundays excluded). Written notification shall be submitted with a copy of the particular test data sheet(s) and preliminary data plot(s).
In the event of an apparent nonconformance, a calibration check of some critically sensitive test equipment and instrumentation may be required for verification of accuracy.

The necessity for the calibration shall be at the COTR's discretion and shall be performed without additional costs to the OCWS.

14.2 CALIBRATION DOCUMENTATION

14.2.1 COPIES

Copies of the data sheets containing the calibration data for each Part 572, Subpart O dummy used in the vehicle crash test shall be submitted with the final NCAP test report for the vehicle.

Contractors are required to PROOF READ all Final Test Reports before submittal to the COTR. The OCWS will not act as a report quality control office for contractors. Reports containing a significant number of errors will be returned to the contractor for correction, and a "hold" will be placed on invoice payment for the particular test.

15. DATA SHEETS

DATA SHEET B1
DUMMY DAMAGE CHECKLIST

Dummy Serial Number _____ Test Date _____

Technician _____

This check sheet is completed as part of the calibration verification.

__ Perform general cleaning.

Dummy Item	***Inspect for***	***Comments***	***Damaged***	***OK***
Outer skin	Gashes, rips, cracks			
Head	Ballast secure			
	General appearance			
Neck	Broken or cracked rubber			
	Upper neck bracket firmly attached to the lower neck bracket			
	Looseness at the condyle joint			
	Nodding blocks cracked or out of position			
Spine	Broken or cracks in rubber.			
Ribs	Broken or bent ribs			
	Broken or bent rib supports			
	Damping material separated or cracked			
	Rubber bumpers in place			
Chest Displacement Assembly	Bent shaft			
	Slider arm riding in track			
Transducer leads	Torn cables			

Dummy Item	***Inspect for***	***Comments***	***Damaged***	***OK***
Accelerometer Mountings	Head mounting secure			
	Chest mounting secure			
Knees	Skin condition			
	Insert (do not remove)			
	Casting			
Limbs	Normal movement and adjustment			
Knee Sliders	Wires intact			
	Rubber returned to “at rest” position			
Pelvis	Broken			
Other				

If upon visual examination, damage is apparent in any of these areas, the appropriate engineer or engineering technician is to be consulted for a decision on repair or replacement of parts.
Repair or Replacement approved by:

_____ _____
Signature Date

Describe the repair or replacement of parts:

Checked by

_____ _____
Signature Date

DATA SHEET B2
EXTERNAL MEASUREMENTS (5th Female)
(See the PADI)

Dummy Serial Number _____ Test Date _____

Technician _____

__Pretest calibration
__Post test calibration verification

__1. Remove the dummy's chest jacket and the abdominal insert.
__2. Seat the dummy on a flat, rigid, smooth, clean, dry, horizontal surface as shown in Figure 3B and 4B. The seating surface is at least 406 mm (16 in) wide and 406 mm (16 in) in depth with a vertical section at least 406 mm (16 in) wide and 914 mm (36 in) high attached to the rear of the seating fixture. The dummy's midsagittal plane is vertical and centered on the test surface.
__3. Remove the four ¼-20 x 5/8 SHCS that attach the lumbar spine to the thoracic spine. Lift the upper torso off of the lower torso. Check the torque on the 2-20 jam nut that attaches to the end of the lumbar spine cable. The torque should be 1.13 – 1.35 NM (10 – 12 in-lbs).

NOTE: At this point the thorax is to be inspected for damage. The thorax displacement transducer may be removed for calibration if required (pretest calibration only). Extreme caution must be used so as not to damage the instrumentation cables.

__4. Reassemble the upper torso to the lower torso.
__5. Secure the dummy to the test fixture so that the button head screws (that attach the top rib to the spine box) and the adapter plate (that connects the upper torso to the lower torso) are against the vertical surface of the fixture. The rear surface of the buttocks now contacts the fixture.
__6. Position the dummy's H-point so it is 83.8 ± 2.5 mm (3.3 ± 0.1 in) above the horizontal seating surface and 147.3 ± 2.5 mm) (5.8 ± 0.1 in) forward of the rear vertical surface of the fixture. (Note: the H-point is located 68.6 mm (2.7 in) forward and 58.4 mm (2.3 in) downward from the center of the square hole in the pelvis.)
__7. Extend the dummy's neck so that the base of the skull is level both fore-and-aft and side-to-side, within 0.5 degrees. The rear surface of the skull cap should be 45.7 ± 2.5 mm (1.8 ± 0.1 in) from the vertical surface of the test fixture. A strap or bungee cord may be placed around the forehead of the dummy to stabilize the head in this position.
__8. Position the upper and lower legs parallel to the midsagittal plane so the centerline between the knee pivot and the screw attaching the ankle to the lower tibia is vertical.
__9. Position the feet parallel to the dummy's midsagittal plane with the bottoms horizontal and parallel to the seating surface.
__10. Position the upper arms downward vertically so the centerline between the shoulders and elbow pivots is parallel to the rear vertical surface of the fixture.

__11. Position the lower arms horizontally so the centerline between the elbow and wrist pivots is parallel to the seat surface.
__12. Record the dimensions listed in following table, except for dimension Y and Z (reference figure 2B).
__13. Install the abdominal insert and chest jacket. Reposition the dummy on the test fixture. The head need not be level as previously specified.
__14. Mark the locations AA, and BB, and record the dimensions Y, Z, as specified in following table and figure 2B.

_____ _____
Signature Date

HYBRID III, PART 572, SUBPART O EXTERNAL DIMENSIONS				
DIMENSION	DESCRIPTION	DETAILS	ASSEMBLY DIMENSION (mm)	ACTUAL MEASUREMENT
A	TOTAL SITTING HEIGHT	Seat surface to highest point on top of the head.	774.7-800.1	
B	SHOULDER PIVOT HEIGHT	Centerline of shoulder pivot bolt to the seat surface.	431.8-457.2	
C	H-POINT HEIGHT	Reference	81.3-86.3	
D	H-POINT LOCATION FROM BACKLINE	Reference	144.8-149.8	
E	SHOULDER PIVOT FROM BACKLINE	Center of the shoulder clevis to the rear vertical surface of the fixture.	68.6-83.8	
F	THIGH CLEARANCE	Measured at the highest point on the upper femur segment.	119.4-134.6	
G	BACK OF ELBOW TO WRIST PIVOT	back of the elbow flesh to the wrist pivot in line with the elbow and wrist pivots	243.9-259.1	
H	HEAD BACK TO BACKLINE	Back of Skull cap skin to seat rear vertical surface (Reference)	43.2-48.2	
I	SHOULDER TO- ELBOW LENGTH	Measure from the highest point on top of the shoulder clevis to the lowest part of the flesh on the elbow in line with the elbow pivot bolt.	276.8-297.2	
J	ELBOW REST HEIGHT	Measure from the flesh below the elbow pivot bolt to the seat surface.	182.8-203.2	
K	BUTTOCK TO KNEE LENGTH	The forward most part of the knee flesh to the rear vertical surface of the fixture.	520.7-546.1	
L	POPLITEAL HEIGHT	Seat surface to the plane of the horizontal plane of the bottom of the feet.	355.6-376	
M	KNEE PIVOT HEIGHT	Centerline of knee pivot bolt to the horizontal plane of the bottom of the feet.	393.7-419.1	
N	BUTTOCK POPLITEAL LENGTH	The rearmost surface of the lower leg to the same point on the rear surface of the buttocks used for dim. “K”.	414-439.4	
HYBRID III, SUBPART O EXTERNAL DIMENSIONS, continued				

DIMENSION	DESCRIPTION	DETAILS	ASSEMBLY DIMENSION (mm)	ACTUAL MEASUREMENT
O	CHEST DEPTH WITHOUT JACKET	Measured 304.8 ± 5.1 mm above seat surface	175.3-190.5	
P	FOOT LENGTH	Tip of toe to rear of heal	218.5-233.7	
Q	STANDING HEIGHT	(THEORETICAL)	1501.1	N/A
R	BUTTOCK TO KNEE PIVOT LENGTH	The rear surface of the buttocks to the knee pivot bolt	457.2-482.6	
S	HEAD BREADTH	The widest part of the head	137.1-147.3	
T	HEAD DEPTH	Back of the head to the forehead	177.8-188	
U	HIP BREADTH	The widest part of the hip	299.7-314.9	
V	SHOULDER BREADTH	Outside edges of right and left shoulder clevises	350.5-365.7	
W	FOOT BREADTH	The widest part of the foot	78.8-94	
X	HEAD CIRCUMFERENCE	Measured at the point as in dim. “T”	528.3-548.7	
Y	CHEST CIRCUMFERENCE (WITH CHEST JACKET)	Measured 345.4 ± 12.7 mm above seat surface	850.9-881.3	
Z	WAIST CIRCUMFERENCE	Measured 165.1 ± 5.1 mm above seat surface	759.5-789.9	
AA	REFERENCE LOCATION FOR MEASUREMENT OF CHEST CIRCUMFERENCE	Reference	332.7-358.1	
BB	REFERENCE LOCATION FOR MEASUREMENT OF WAIST CIRCUMFERENCE	Reference	160.1-170.2	

EXTERNAL DIMENSION SPECIFICATIONS

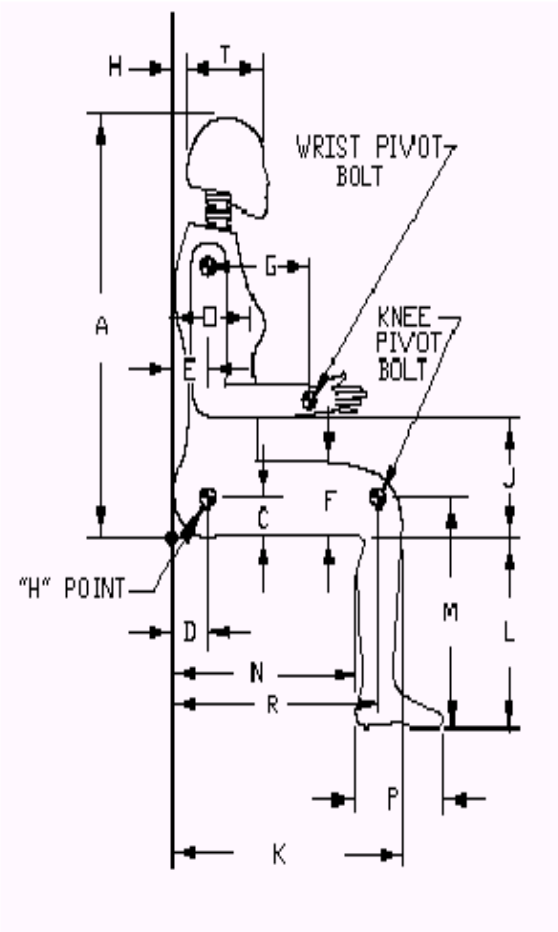

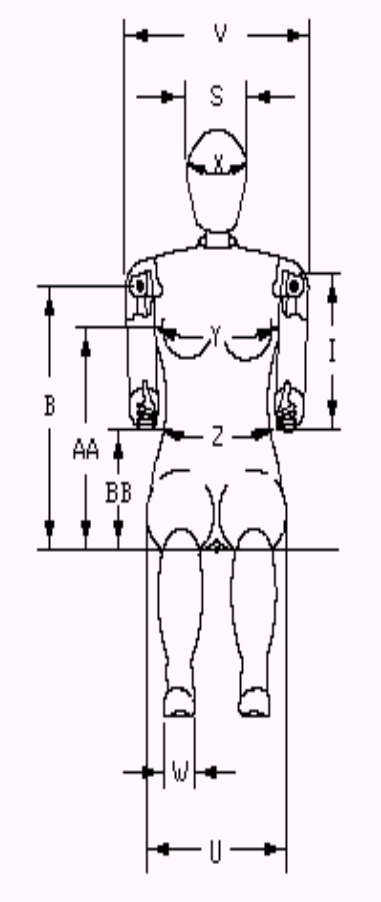

FIGURE 2B

EXTERNAL DIMENSIONS TEST SETUP

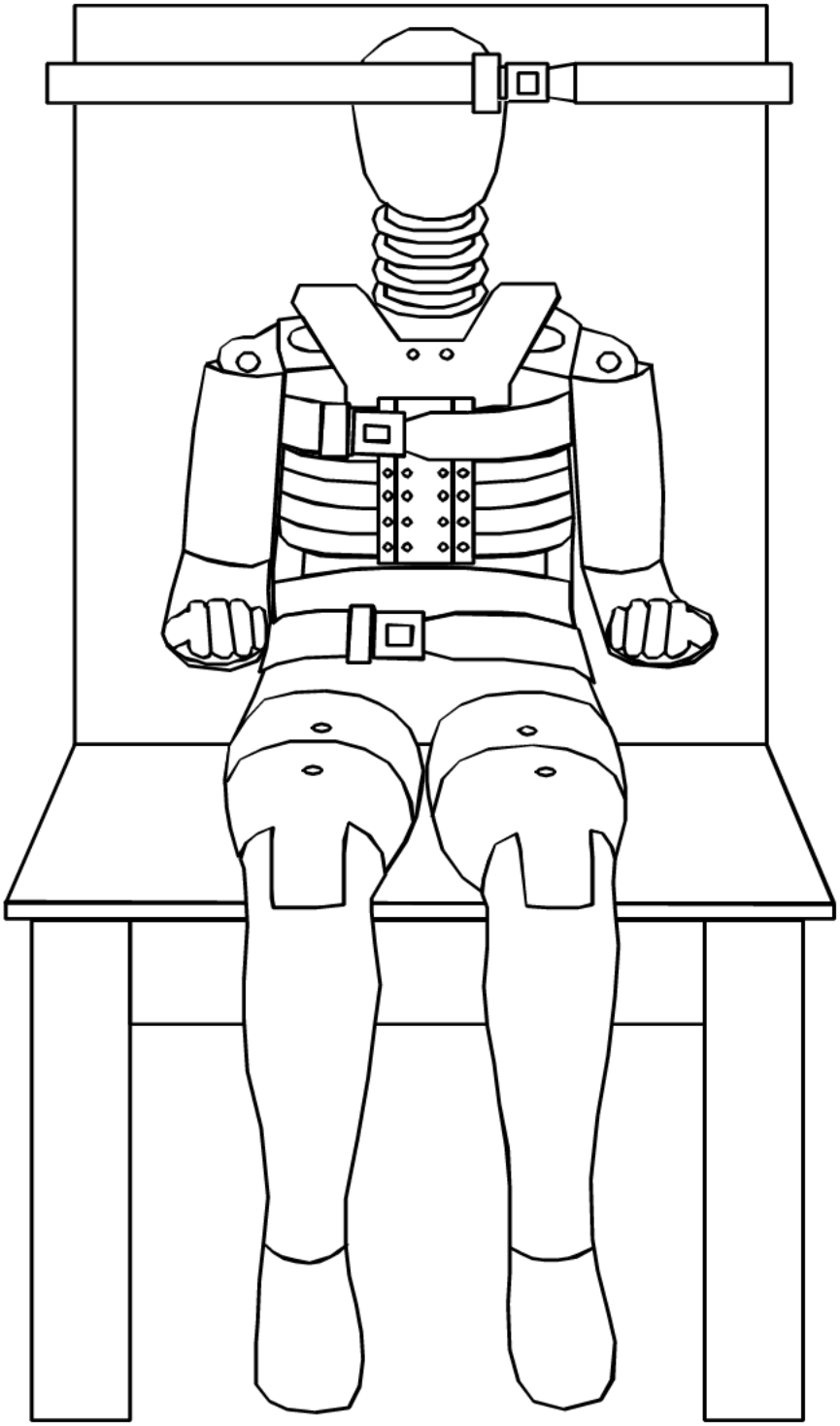

FIGURE 3B

EXTERNAL DIMENSIONS TEST SETUP

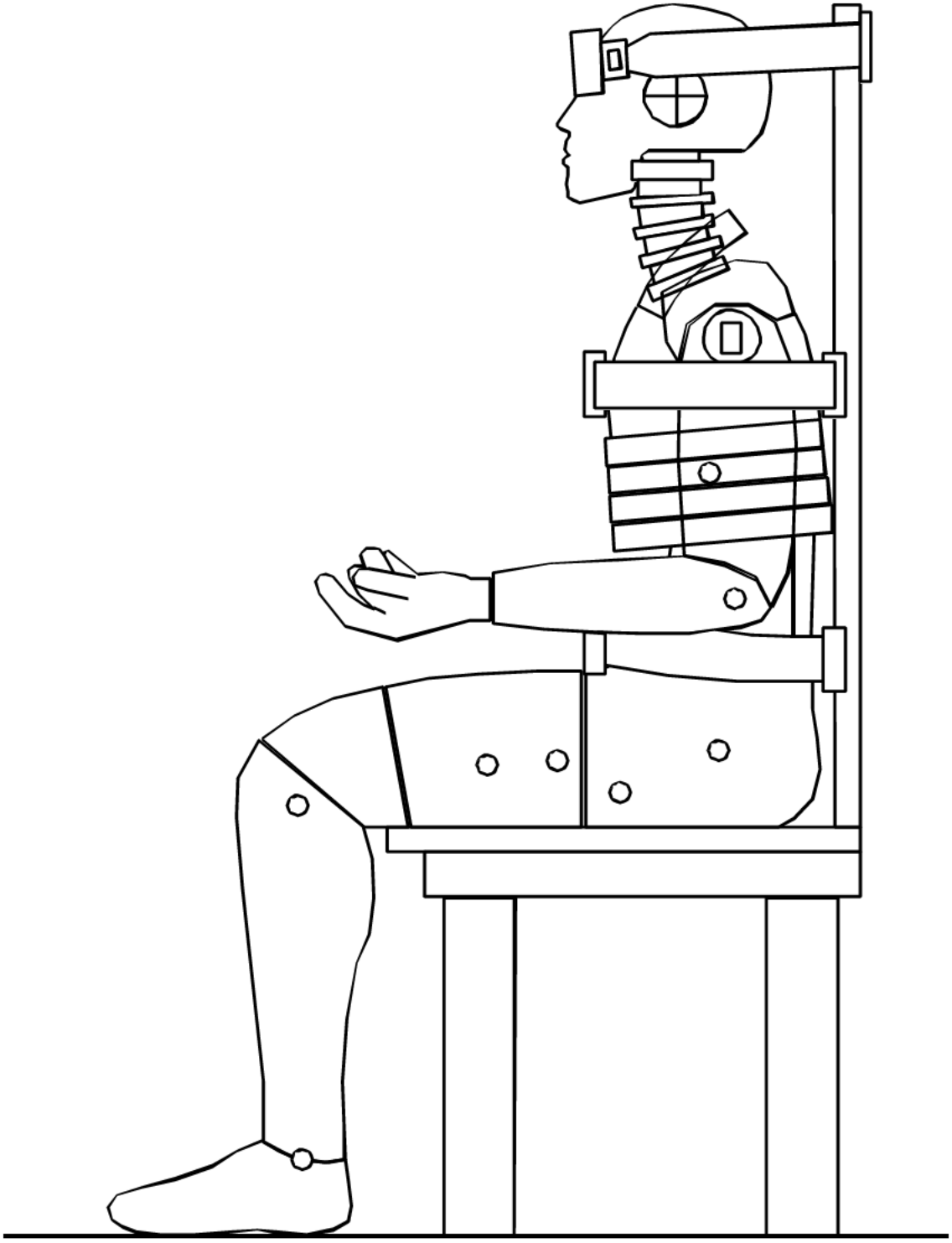

FIGURE 4B

DATA SHEET B3
HEAD DROP TEST (572.132) (5th Female)

Dummy Serial Number _____ Test Date _____

Technician _____

__Pretest calibration
__Post test calibration verification

Test attempt no. ____ (when successive head drops are necessary)

__1. It has been at least 2 hours since the last head drop. (572.132(c)(5))
__ N/A, ONLY one head drop performed

__2. The head assembly consists of the complete head (880105-100X), the six-axis neck transducer (SA572-S11) or neck transducer structural replacement (78051-383X), and three (3) accelerometers (SA572-S4). (572.132(a))

__3. The head accelerometer mounting plate screws ((10-24 x 3/8 SHCS) are torqued to 9.0 Nm.

__4. Accelerometers and their respective mounts are smooth and clean.

__5. Torque the skull cap screws (10-24 x 1/2 SHCS) to 9.0 Nm.

__6. The data acquisition system, including transducers, conforms to the requirements of SAE Recommended Practice J211/1 MAR95. (572.136(m))

__7. The head assembly soaked at a temperature between 18.9°C (66ºF) and 25.6°C (78ºF) and at a relative humidity from 10% to 70% for a period of at least four (4) hours prior to a test. (572.132(c)(1))
Record the maximum temperature _____
Record the minimum temperature _____
Record the maximum humidity _____
Record the minimum humidity _____

__8. Visually inspect the head skin for cracks, cuts, abrasions, etc. Repair or replace the head skin if the damaged area is more than superficial. Note: If the damage resulted from the vehicle crash test in which the dummy was an occupant, the damaged area is to be documented with photography and the post test calibration verification testing completed before any replacement or repairs are made.
Record findings and actions: _____
_____
_____
_____
_____

__9. Clean the impact surface of the skin and the impact surface of the fixture with isopropyl alcohol, trichloroethane or equivalent prior to the test. (572.132(c)(2))

__10. Suspend and orient the head assembly as shown in Figure 5B. The lowest point on the forehead is 376.0 ± 1.0 mm (14.8±0.04 inch) from the impact surface. (572.132(c)(3))
Record the actual distance _____

NOTE: The masses of the suspension device and the accelerometer cables are to be kept as lightweight as possible to minimize their effect on the test results.

__11. The 1.57 mm (0.062 inch) diameter holes located on either side of the dummy's head are equidistance within 2 mm from the impact surface. A typical test setup is shown in Figure 6B. (572.132(c)(3))
Record the right side distance_____
Record the left side distance _____

__12. The impact surface is clean and dry and has a micro finish in the range of 203.2×10^{-6} mm (8 micro inches) to 2032.0×10^{-6} mm (80 micro inches) (RMS). (572.132(c)(4))
Record actual micro finish _____

__13. The impact surface is rigidly supported. (572.132(c)(4))

__14. The impact surface is a flat horizontal steel plate 50.8 mm (2 inches) thick and 610 mm (24 inches) square. (572.132(c)(4))
Record thickness _____
Record width _____
Record length _____

__15. Drop the head assembly from a height of 376.0 ± 1.0 mm (14.8 inches ± 0.04 inches) by a means that ensures a smooth, instant release onto the impact surface. (572.132(b) & (572.132(c)(4))

__16. Complete the following table using channel class 1000 data. (572.132(b)):

Parameter	Specification	Result
Peak resultant acceleration	250 g ≤ x ≤ 300 g	
Resultant versus time history curve	Unimodal	
Oscillations after the main pulse	Less than 10% of the peak resultant acceleration	
Lateral acceleration	y-axis acceleration ≤ 15 g	

__17. Plots of the x, y, z, and resultant acceleration data follow this sheet.

_____ _____
Signature Date

HEAD DROP TEST SETUP SPECIFICATIONS

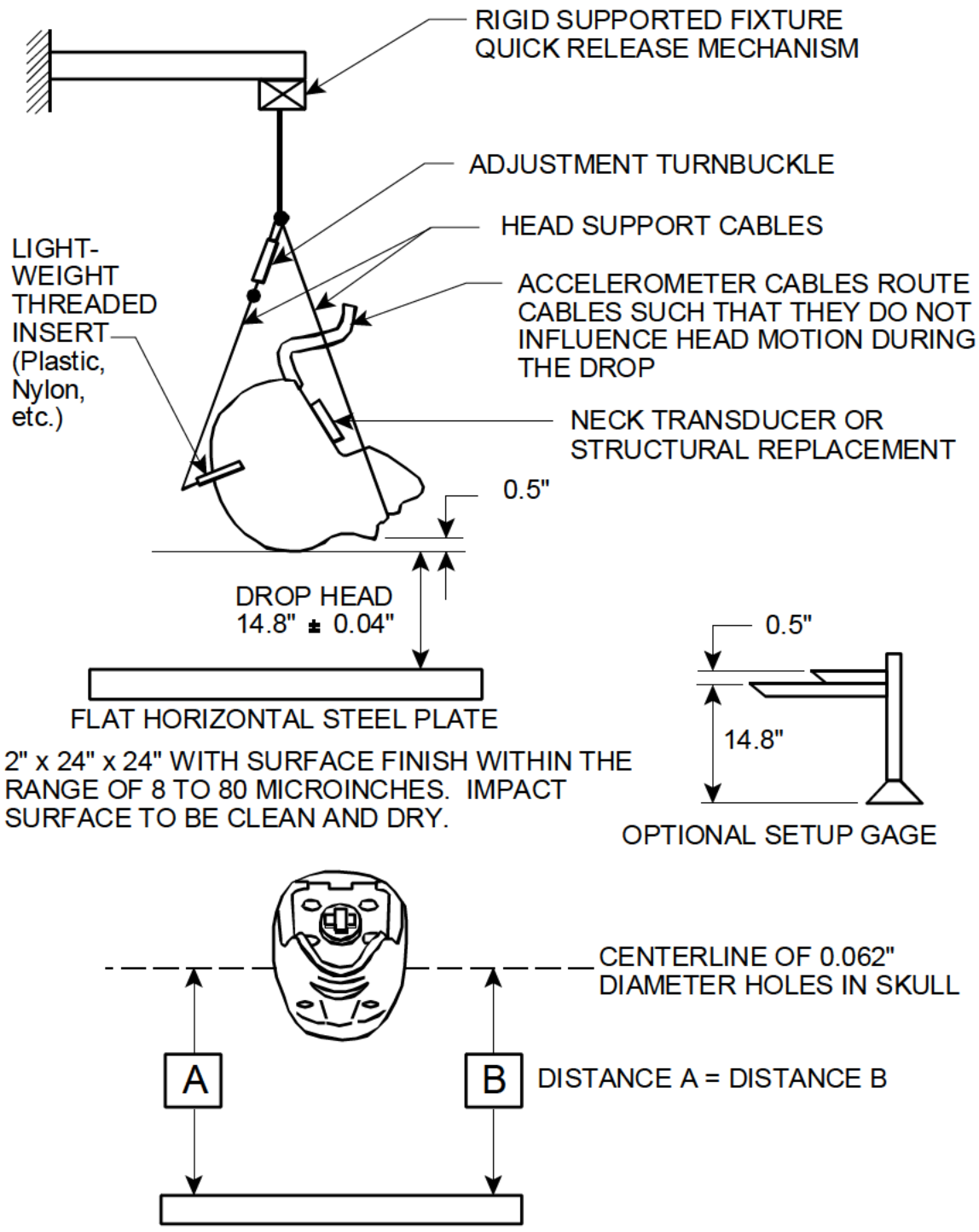

FIGURE 5B

HEAD DROP TEST SETUP

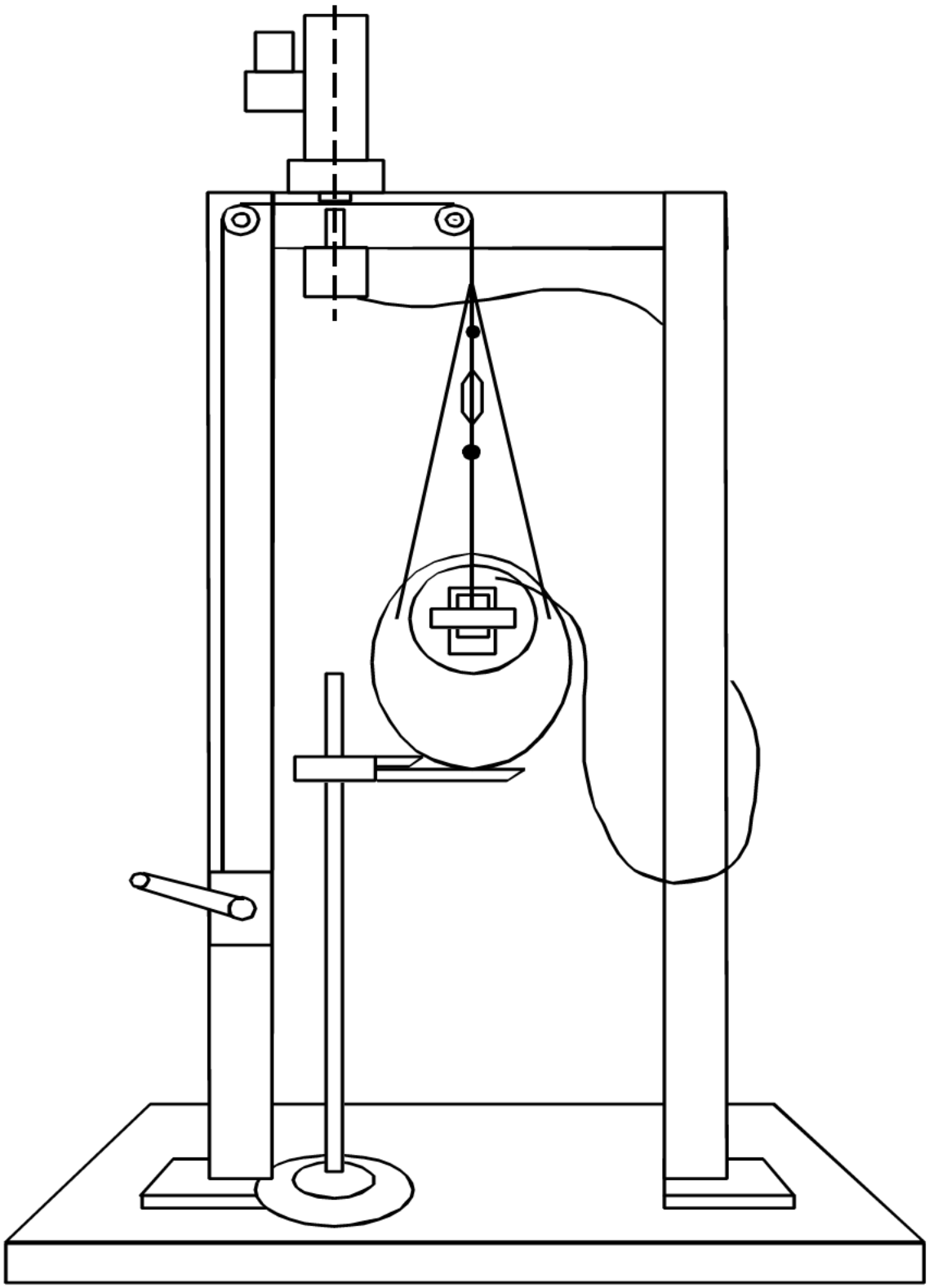

FIGURE 6B

DATA SHEET B4
NECK FLEXION TEST (572.133) (5th Female)

Dummy Serial Number _____ Test Date _____

Technician _____

__Pretest calibration
__Post test calibration verification

Test attempt no. ____ (when successive flexion tests are necessary)

__1. It has been at least 30 minutes since the last flexion test. (572.137(q))
__ N/A, ONLY one neck test performed

__2. The components required for the neck tests include the head assembly (880105-100X), neck (880105-250), bib simulator (880105-371), upper neck adjusting bracket (880105-207), lower neck adjusting bracket (880105-208), six axis neck transducer (SA572-S11) and either three accelerometers (SA572-S4) or their mass equivalent installed in the head assembly as specified in drawing 880105-100X. Data from the accelerometers are not required. (572.133(b))

__3. The assembly soaked at a temperature between 20.6°C (69°F) and 22.2°C (72°F) and at a relative humidity from 10% to 70% for a period of at least four (4) hours prior to a test. (572.133(c)(1))
Record the maximum temperature _____
Record the minimum temperature _____
Record the maximum humidity _____
Record the minimum humidity _____

__4. Visually inspect neck assembly for cracks, cuts and separation of the rubber from the metal segments. Note: If the damage resulted from the vehicle crash test in which the dummy was an occupant, the damaged area is to be documented with photography and the post test calibration verification testing completed before any replacement or repairs are made.
Record findings and actions: _____
_____
_____
_____
_____

__5. Inspect the nodding blocks (78051-351) for any deterioration, but when replacement is necessary, ONLY replace during pre-test calibration. Using a Shore "A" type Durometer, verify the hardness of the nodding blocks is between 80 and 90. Ensure the nodding blocks are installed correctly. (880105-250 and PADI page17).
Record findings and actions: _____
_____
_____
_____

__6, Torque the jam nut (9000018) on the neck cable (880105-206) to 1.4 ± 0.2 Nm (12.0 ± 2.0 in-lb). (572.133(c)(2)

__7. The data acquisition system, including transducers, conforms to the requirements of SAE Recommended Practice J211/1 MAR95. (572.137(m))

__8. The test fixture pendulum conforms to the specifications in Figure 7B. (572.133(c)(3))

__9. The head-neck assembly is mounted on the pendulum so the midsagittal plane of the head is vertical and coincides with the plane of motion of the pendulum longitudinal centerline as shown in Figure 8B for the flexion test. (572.133(c)(3))

__10. Install the transducers or other devices for measuring the "D" plane rotation with respect to the pendulum longitudinal centerline. Note: Plane "D" is the bottom horizontal surface of the skull. These measurement devices should be designed to minimize their influence upon the performance of the head-neck assembly. An example of a measurement device is shown in Figure 10B.

__11. With the pendulum resting against the honeycomb material, the neck bracket was adjusted until the longitudinal centerline of the pendulum was perpendicular ± 1 degree to plane "D" on the dummy's head.

__12. Release the pendulum and allow it to fall freely from a height to achieve an impact speed of 6.89 m/s to 7.13 m/s as measured at the center of the pendulum accelerometer. (572.133(c)(4)(i))

__13. Complete the following table:

Neck Flexion Test Results (572.133(b)(1) & (572.133(c)(4)(I & ii)

Parameter		Specification	Result
Pendulum impact speed		6.89 m/s ≤ speed ≤ 7.13 m/s	
Pendulum ΔV with respect to impact speed	@ 10ms	2.1 m/s ≤ ΔV ≤ 2.5 m/s	
	@ 20 ms	4.0 m/s ≤ ΔV ≤ 5.0 m/s	
	@30ms	5.8 m/s ≤ ΔV ≤ 7.0 m/s	
Plane D Rotation		Peak moment* 69 Nm ≤ moment ≤ 83 Nm during the following rotation range 77° ≤ angle ≤ 91°	____Nm @ ___degrees
Positive Moment Decay** (Flexion)		Time to decay to 10 Nm 80 ms ≤ time ≤ 100ms	

*Moment about the occipital condyle = M_y – (0.01778 m x F_x) (572.133(b)(1)(ii))

My = Moment in Nm measured by the transducer

Fx = Force, in N measured by the transducer

**Time zero is defined as the time of initial contact between the pendulum striker plate and the honeycomb material. (572.133(b)(3)

__14. Plots of acceleration, velocity, y-axis moment, and x-axis force and y-axis moment about the occipital condyle follows this sheet.

_____ _____

Signature Date

DATA SHEET B5
NECK EXTENSION TEST (572.133) (5th Female)

Dummy Serial Number _____ Test Date _____

Technician _____

__Pretest calibration
__Post test calibration verification

Test attempt no. ____ (when successive extension tests are necessary)

__1. It has been at least 30 minutes since the last extension test. (572.137(q))
__ N/A, ONLY one neck test performed

__2. The components required for the neck tests include the head assembly (880105-100X), neck (880105-250), bib simulator (880105-371), upper neck adjusting bracket (880105-207), lower neck adjusting bracket (880105-208), six axis neck transducer (SA572-S11) and either three accelerometers (SA572-S4) or their mass equivalent installed in the head assembly as specified in drawing 880105-100X. Data from the accelerometers are not required. (572.133(b))

__3. The assembly soaked at a temperature between 20.6°C (69°F) and 22.2°C (72°F) and at a relative humidity from 10% to 70% for a period of at least four (4) hours prior to a test. (572.133(c)(1))
Record the maximum temperature _____
Record the minimum temperature _____
Record the maximum humidity _____
Record the minimum humidity _____

__4. Visually inspect neck assembly for cracks, cuts and separation of the rubber from the metal segments.

NOTE: If the damage resulted from the vehicle crash test in which the dummy was an occupant, the damaged area is to be documented with photography and the post test calibration verification testing completed before any replacement or repairs are made.

Record findings and actions: _____
_____
_____
_____
_____

__5. Inspect the nodding blocks (78051-351) for any deterioration, but when replacement is necessary, ONLY replace during pre-test calibration. Using a Shore "A" type Durometer, verify the hardness of the nodding blocks is between 80 and 90. Ensure the nodding blocks are installed correctly. (880105-250 and PADI).
Record findings and actions: _____
_____
_____

__6, Torque the jam nut (9000018) on the neck cable (880105-206) to 1.4 ± 0.2 Nm (12.0 ± 2.0 in-lb). (572.133(c)(2)

__7. The data acquisition system, including transducers, conforms to the requirements of SAE Recommended Practice J211/1 MAR95. (572.137(m))

__8. The test fixture pendulum conforms to the specifications in Figure 7B. (572.133(c)(3))

__9. The head-neck assembly is mounted on the pendulum so the midsagittal plane of the head is vertical and coincides with the plane of motion of the pendulum longitudinal centerline as shown in Figure 9B for the extension test. (572.133(c)(3))

__10. Install the transducers or other devices for measuring the "D" plane rotation with respect to the pendulum longitudinal centerline. Note: Plane "D" is the bottom horizontal surface of the skull. These measurement devices should be designed to minimize their influence upon the performance of the head-neck assembly. An example of a measurement device is shown in Figure 10B.

__11. With the pendulum resting against the honeycomb material, the neck bracket was adjusted until the longitudinal centerline of the pendulum was perpendicular ± 1 degree to plane "D" on the dummy's head.

__12. Release the pendulum and allow it to fall freely from a height to achieve an impact speed of 5.95 m/s to 6.19 m/s as measured at the center of the pendulum accelerometer. (572.133(c)(4)(i))

__13. Complete the following table:

Neck Extension Test Results (572.133(b)(2) & (572.133(c)(4)(I & ii)

Parameter		Specification	Result
Pendulum impact speed		5.95 m/s ≤ speed ≤ 6.19 m/s	
Pendulum ΔV with respect to impact speed	@ 10ms	1.5 m/s ≤ ΔV ≤ 1.9 m/s	
	@ 20 ms	3.1 m/s ≤ ΔV ≤ 3.9 m/s	
	@30ms	4.6 m/s ≤ ΔV ≤ 5.6 m/s	
Plane D Rotation		Peak moment* -65 Nm ≤ moment ≤ -53 Nm during the following rotation range 99° ≤ angle ≤ 114°	____Nm @ ___degrees
Negative Moment Decay** (Extension)		Time to decay to -10 Nm 94 ms ≤ time ≤ 114 ms	

*Moment about the occipital condyle = M_y – (0.01778 m x F_x) (572.133(b)(1)(ii)

My = Moment in Nm measured by the transducer

Fx = Force, in N measured by the transducer

**Time zero is defined as the time of initial contact between the pendulum striker plate and the honeycomb material. (572.133(b)(3)

__14 Plots of acceleration, velocity, y-axis moment, and x-axis force and y-axis moment about the occipital condyle follow this sheet.

_____ _____

Signature Date

PENDULUM SPECIFICATIONS

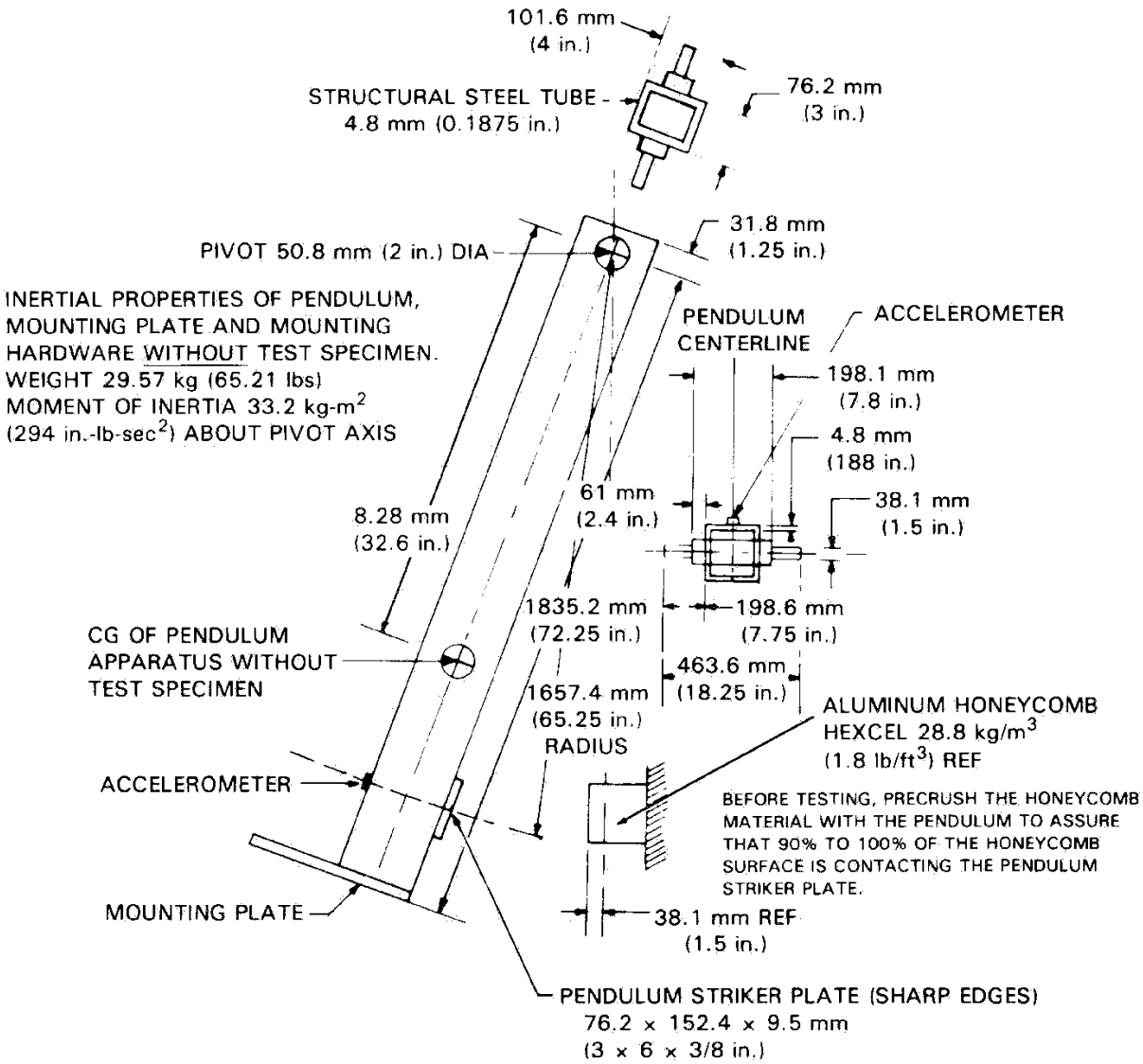

FIGURE 7B

NECK FLEXION TEST SETUP SPECIFICATIONS

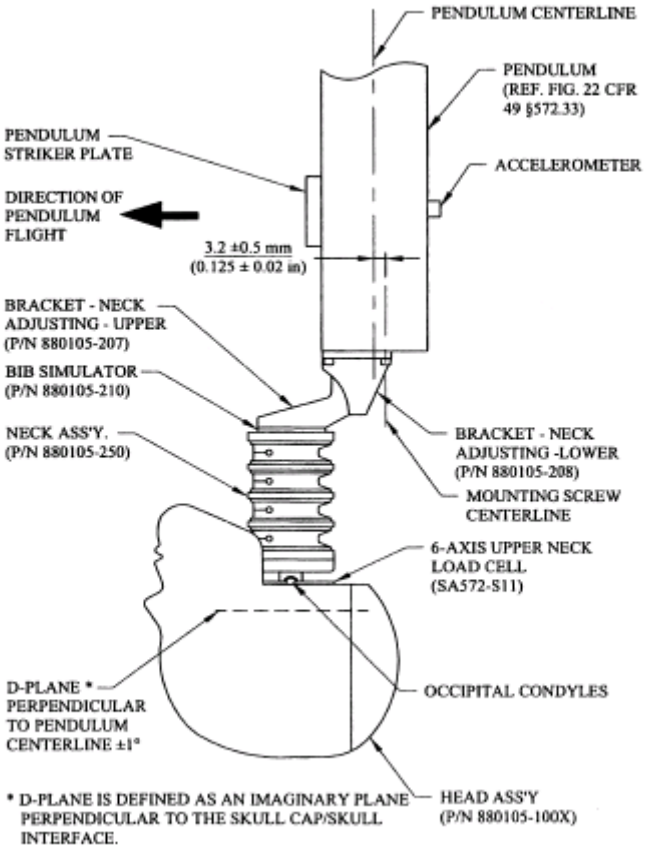

FIGURE 8B

NECK EXTENSION TEST SETUP SPECIFICATIONS

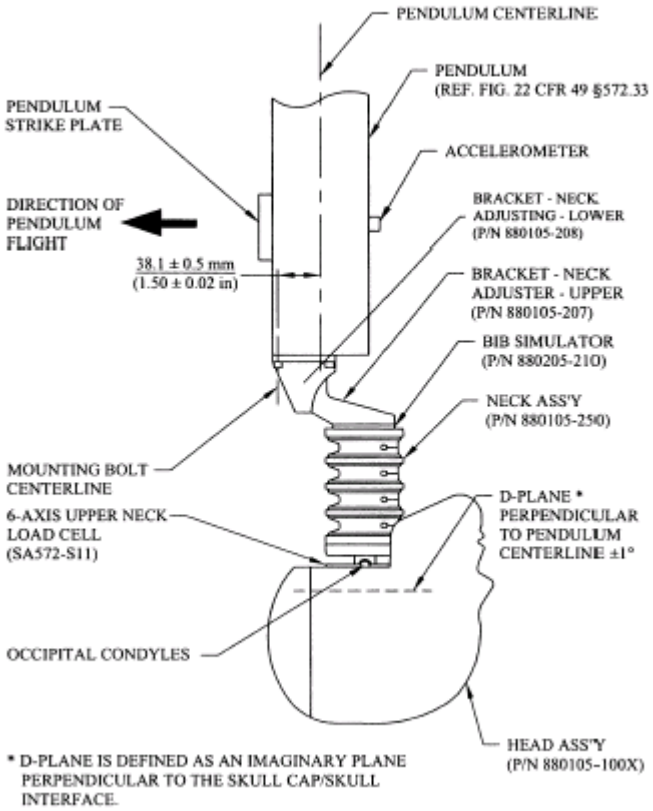

FIGURE 9B

ROTATION TRANSDUCER ASSEMBLY

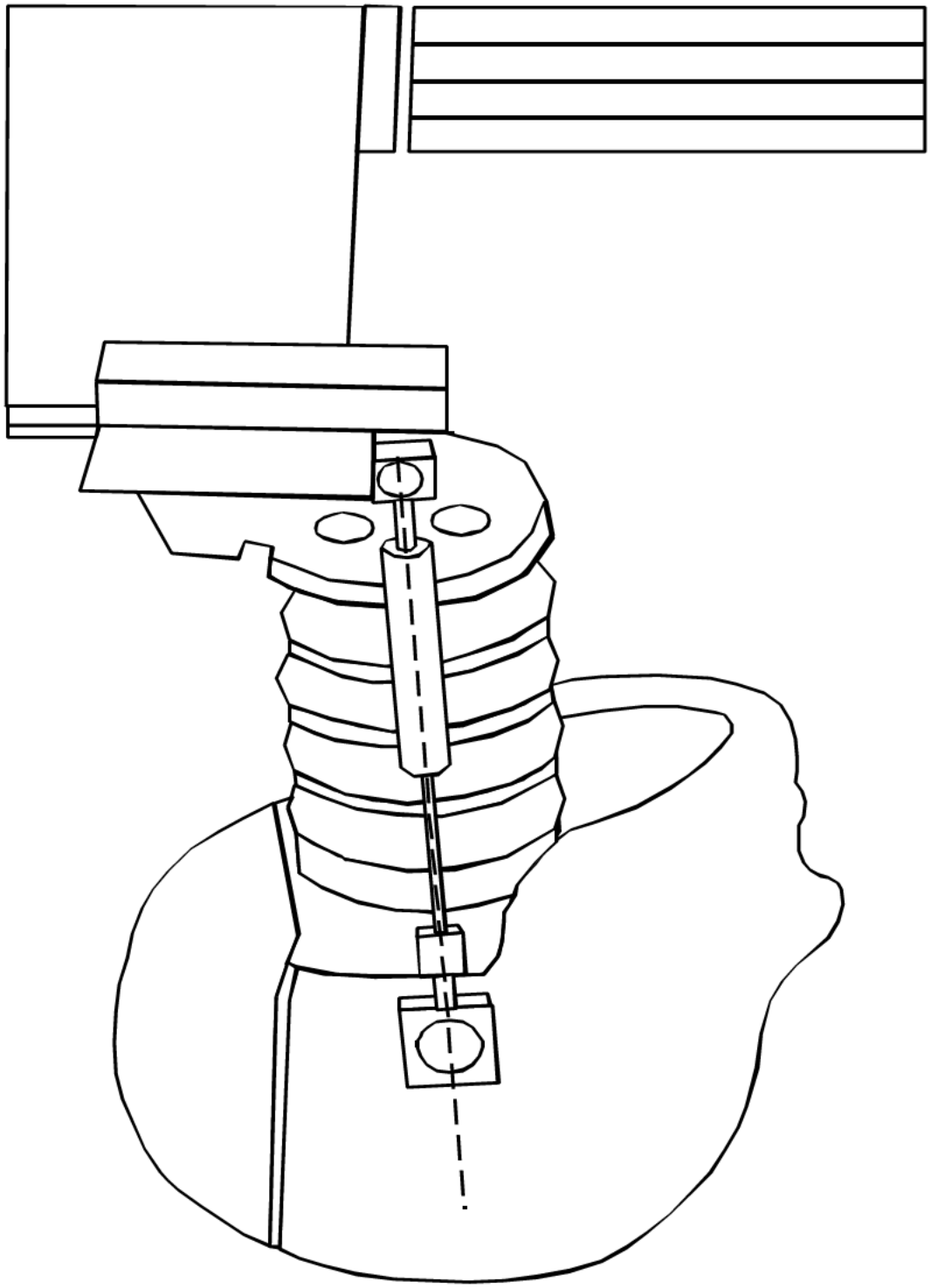

FIGURE 10B

DATA SHEET B6
THORAX IMPACT TEST (572.134) (5th Female)

Dummy Serial Number _____ Test Date _____

Technician _____

__Pretest calibration
__Post test calibration verification

Test attempt no. ____ (when successive thorax impact tests are necessary)

__1. It has been at least 30 minutes since the last thorax impact test. (572.137(q))
__ N/A, ONLY one thorax impact test performed
__2. The test fixture conforms to the specifications in Figure 11B.
__3. The complete assembled dummy (880105-000) is used (572.134(b)) and is dressed in a form fitting cotton stretch above-the-elbow sleeved shirt and above-the-knee pants. The weight of the shirt and pants shall not exceed 0.14 kg. (572.134(c)(1))
__4. The dummy assembly soaked at a temperature between 20.6°C (69ºF) and 22.2°C (72ºF) and at a relative humidity from 10% to 70% for a period of at least four (4) hours prior to this test. (572.134(c)(2))
Record the maximum temperature _____
Record the minimum temperature _____
Record the maximum humidity _____
Record the minimum humidity _____
__5. Remove the chest skin and visually inspect the thorax assembly for cracks, cuts, abrasions, etc. Particular attention should be given to the rib damping material, chest displacement transducer assembly and the rear rib supports. Inspect for rib deformation using the chest depth gage. If any damage is noted repair and/or replace the damaged components unless the damage resulted from the vehicle crash test in which the dummy was an occupant in which case the damage must be documented and post test calibration verification testing completed before any repairs or replacements are made.
__ - No damage
__ - Damage from crash test, no repairs or replacement because this is a post test calibration verification. Record damage _____
_____
__ - The following repairs or replacement was performed. Record _____
_____
_____
__6. Seat the dummy, (chest skin still removed) without back and arm supports, on the test fixture surface as shown in Figure 11B. The surface must be long enough to support the pelvis and outstretched legs. (572.134(c)(3))
__7. Level the ribs both longitudinally and laterally ± 0.5º and adjust the pelvis angle to 7º ± 2º. The angle may be measured using the special H-point tool (TE-2504) that inserts into the pelvic structure and extends outward beyond the pelvic skin surface or by using the surface of the pelvic adaptor block.

__8. The midsagittal plane of the dummy is vertical within ± 1º. (572.134(c)(3))

__9. The longitudinal centerline of the test probe is centered within ±2.5 mm of the midsagittal plane of the dummy and is 12.7 mm ± 1mm below the horizontal peripheral centerline of the No. 3 rib and is within 0.5º of a horizontal line in the dummy's midsagittal plane. (572.134(c)(4))

__10. Align the adjustable neck bracket index marks to the "zero" position.

__11. Record locations such as the rear surfaces of the thoracic spine and the lower neck bracket reference with respect to the laboratory coordinate system. These reference measurements are necessary to ensure the dummy is in the same position after the chest skin is installed. The reference locations must be accessible after installation of the chest skin. It may be necessary to leave the chest skin zipper unfastened until the references are checked and fasten it just prior to the test.

__12. Install the chest skin and reposition the dummy as described in the preceding paragraph using the reference measurements recorded.

__13. Place the arm assemblies horizontal ± 2º and parallel to the midsagittal plane. The arms are held in place by tightening the adjustment nut that holds the arm yoke to the clavicle assembly.

__14. The data acquisition system, including transducers, must conform to the requirements of SAE Recommended Practice J211/1 MAR95 (572.136(m)) Class 180.

__15. Impact the anterior surface of the thorax with the test probe so the longitudinal centerline of the probe is within 2º of a horizontal line in the dummy's midsagittal plane at the moment of impact. (572.134(c)(5)) The velocity of the test probe at the time of impact is 6.71 m/s ± 0.12m/s. (572.134(b)) The probe is guided so there is no significant lateral, vertical or rotational movement during the impact. (572.134(c)(6)) Neither the suspension hardware, suspension cables, nor other attachments to the probe, including the velocity vane, make contact with the dummy. (572.134(c)(7))

__16. Complete the following table:

Thorax Impact Results (572.134(b) and 572.134(b)(1)&(2)

Parameter*	Specification	Result
Test Probe Speed	6.59 m/s ≤ speed ≤ 6.83 m/s	
Chest Compression	50.0 mm ≤ compression ≤ 58.0 mm	
Peak force** between 50.0 and 58.0 mm chest compression	3900N ≤ peak force ≤ 4400N	
Peak force** between 18.0 and 50.0 mm chest compression	Peak force ≤ 4600 N	
Internal Hysteresis***	69% ≤ hysteresis ≤ 85%	

*Time zero is defined as the time of initial contact between the test probe and the chest skin.
**Force = impactor mass x acceleration (572.134(b)(3))

***Area under loading curve minus the area under the unloading curve divided by the area under the loading curve. (Figure 12B

__17. Plots of chest compression, acceleration, force, force versus deflection follow this sheet.

_____ _____
Signature Date

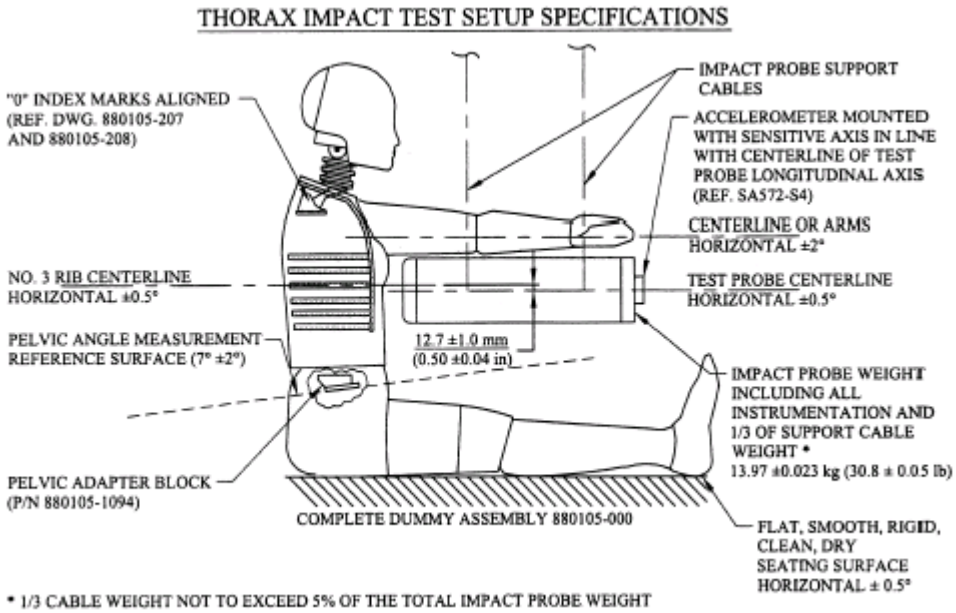

Probe specifications:

1. Rigid metallic construction, concentric about its longitudinal axis.
2. A mass of 13.97 ± 0.023 kg (30.8 ± 0.05 lbs). 1/3 of the weight of the suspension cables and their attachments to the impact probe are included in the calculation of mass, and such components may not exceed 5 percent of the total weight of the test probe.
3. Minimum mass moment of inertia of 3646 kg-cm^2 (3.22 lbs-in-sec^2) in yaw and pitch about the center of gravity.
4. The impacting end of the probe is perpendicular to and concentric with the longitudinal axis. It has a flat, continuous, and non-deformable face with diameter of 152.4 ± 0.25 mm (6.00 ± 0.01 in) and a maximum edge radius of 7.6 to 12.7 mm (0.3 to 0.5 in).
5. The impactor is a cylinder with a diameter of 152.4-152.6 mm (6.0-6.1 in) and it is at least 25 mm (1.0 in) long.
6. The probe's end opposite to the impact face must have provisions for mounting of an accelerometer with its sensitive axis collinear with the longitudinal axis of the probe.
7. The impact probe shall have a free air resonant frequency of not less than 1000 Hz.

FIGURE 11B

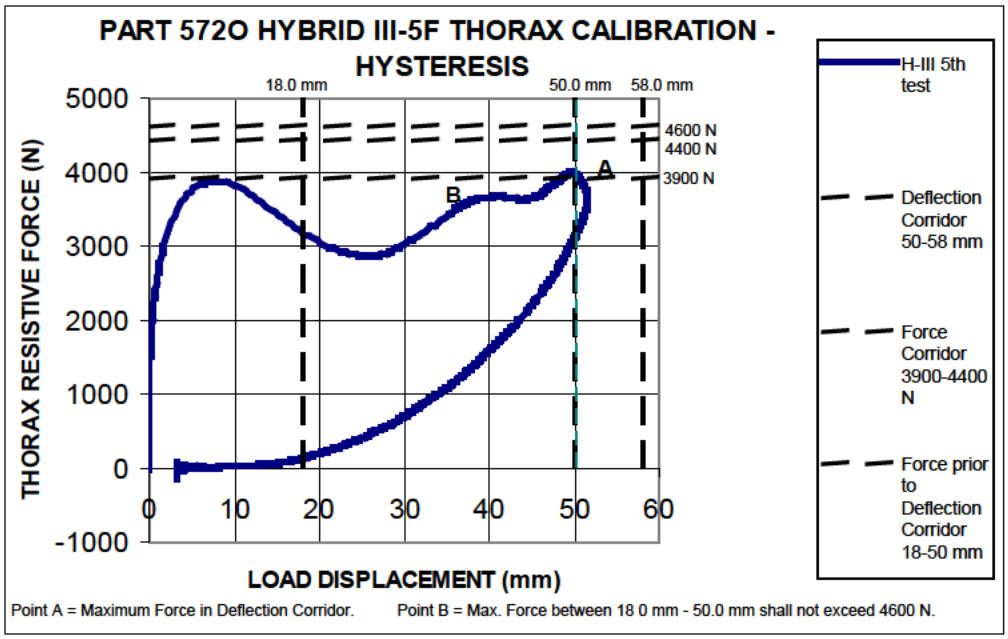
PART 572O HYBRID III-5F THORAX CALIBRATION - HYSTERESIS
18.0 mm
50.0 mm
58.0 mm
4600 N
4400 N
3900 N
A
B
THORAX RESISTIVE FORCE (N)
5000
4000
3000
2000
1000
0
-1000
0
10
20
30
40
50
60
LOAD DISPLACEMENT (mm)
H-III 5th test
Deflection Corridor 50-58 mm
Force Corridor 3900-4400 N
Force prior to Deflection Corridor 18-50 mm
Point A = Maximum Force in Deflection Corridor.
Point B = Max. Force between 18 0 mm - 50.0 mm shall not exceed 4600 N.

FIGURE 12B

DATA SHEET B7
TORSO FLEXION TEST (572.135) (5th Female)

Dummy Serial Number _____ Test Date _____

Technician _____

__Pretest calibration
__Post test calibration verification

Test attempt no. ____ (when successive torso flexion tests are necessary)

__1. It has been at least 30 minutes since the last torso flexion test. (572.137(q))
__ N/A, ONLY one torso flexion test performed
__2. The test fixture conforms to the specifications in Figure 13B.
__3. The complete assembled dummy (880105-000) is used (572.135(c)(2)).
__ with legs below the femurs.
__ without legs below the femurs.
__4. The dummy assembly soaked at a temperature between 18.9°C (66ºF) and 25.6°C (78ºF) and at a relative humidity from 10% to 70% for a period of at least four (4) hours prior to this test. (572.135(c)(1))
Record the maximum temperature _____
Record the minimum temperature _____
Record the maximum humidity _____
Record the minimum humidity _____
__5. Secure the pelvis to the fixture at the pelvis instrument cavity rear face by threading four ¼ cap screws into the available threaded attachment holes. Tighten the mountings so that the test material is rigidly affixed to the test fixture and the pelvic lumbar joining surface is horizontal. (572.135(c)(3))
__6. Attach the loading adapter bracket to the spine of the dummy as shown in Figure 13B**.** (572.135(c)(4))
__7. Inspect and adjust, if necessary, the seating of the abdominal insert within the pelvis cavity and with respect to the torso flesh, assuring that the torso flesh provides uniform fit and overlap with respect to the outside surface of the pelvis flesh. (572.135(c)(5))
__8. Flex the dummy forward and back 3 times such that the angle reference plane moves between 0° and 30° with respect to the vertical transverse plane. (572.135(c)(6))
__9. Support the dummy such that the angle reference plane is at or near 0° (vertical with respect to the vertical transverse plane). Wait at least 30 minutes before continuing. (572.135(c)(6))
__10. Remove all external support that was implemented in 9 above. (572.135(c)(7))
__11. Measure the initial orientation angle of the torso reference plane of the seated, unsupported dummy. (572.135(c)(7))
Record reference plane angle (max. allowed 20°)_____
__12. Attach the pull cable and the load cell. (572.135(c)(8))

__13. Apply a tension force in the midsagittal plane to the pull cable at any upper torso deflection rate between 0.5^o and 1.5^o per second, until the angle reference plane is at $45^o \pm 0.5^o$ of flexion relative to the vertical transverse plane. (572.135(c)(9))

__14. Maintain angle reference plane at $45^o \pm 0.5^o$ of flexion for 10 seconds. (572.135(c)(10))

__15. As quickly as possible release the force applied to the attachment bracket. (572.135(c)(11))

__16. 3 minutes after the release of the force, measure the reference plane angle. (572.135(c)(11))

__17. Complete the following table:

Torso Flexion Results (572.135(b), 572.135(c)(7), (572.135(c)(9))

Parameter	Specification	Result
Initial ref. plane angle	Angle $\leq 20^o$	
Torso rotation rate	$0.5^o/s \leq$ rate $\leq 1.5^o/s$	
Force at $45^o \pm 0.5^o$	320 N $\leq$ force $\leq$ 390 N	
Final ref. plane angle	Initial ref. plane angle $\pm 8^o$	

_____ _____

Signature Date

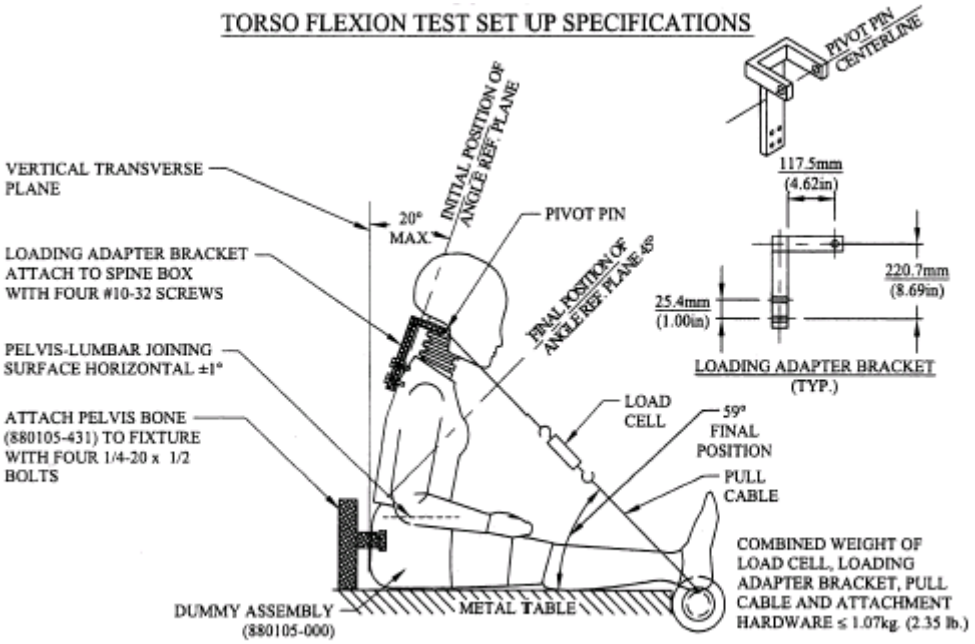
TORSO FLEXION TEST SET UP SPECIFICATIONS
PIVOT PIN CENTERLINE
117.5mm
(4.62in)
220.7mm
(8.69in)
25.4mm
(1.00in)
LOADING ADAPTER BRACKET
(TYP.)
VERTICAL TRANSVERSE PLANE
20° MAX.
INITIAL POSITION OF ANGLE REF. PLANE
PIVOT PIN
LOADING ADAPTER BRACKET ATTACH TO SPINE BOX WITH FOUR #10-32 SCREWS
FINAL POSITION OF ANGLE REF. PLANE 45°
PELVIS-LUMBAR JOINING SURFACE HORIZONTAL ±1°
LOAD CELL
59° FINAL POSITION
ATTACH PELVIS BONE (880105-431) TO FIXTURE WITH FOUR 1/4-20 x 1/2 BOLTS
PULL CABLE
COMBINED WEIGHT OF LOAD CELL, LOADING ADAPTER BRACKET, PULL CABLE AND ATTACHMENT HARDWARE ≤ 1.07kg. (2.35 lb.)
DUMMY ASSEMBLY (880105-000)
METAL TABLE

FIGURE 13B

DATA SHEET B8
LEFT KNEE IMPACT TEST (572.136) (5th Female)

Dummy Serial Number _____ Test Date _____

Technician _____

__Pretest calibration
__Post test calibration verification

Test attempt no. ____ (when successive knee impact tests are necessary)

__1. It has been at least 30 minutes since the last knee impact test. (572.137(q))
__ N/A, ONLY one knee impact test performed
__2. The test fixture conforms to the specifications in Figure 14B.
__3. The knee assembly (880105-528L), lower leg structural replacement (880105-603), lower leg flesh (880105-601), ankle assembly (880105-660), foot assembly (880105-650), and femur load transducer (SA572-S14) (may use the load cell structural replacement (78051-319)) were used. (572.136(b)(1))
__4. The knee assembly soaked at a temperature between 18.9°C (66ºF) and 25.6°C (78ºF) and at a relative humidity from 10% to 70% for a period of at least four (4) hours prior to this test. (572.136(c)(1))
Record the maximum temperature _____
Record the minimum temperature _____
Record the maximum humidity _____
Record the minimum humidity _____
__5. Mount the test specimen and secure it to the rigid test fixture. (572.136(c)(2))
__6. No parts of the foot or tibia contact any exterior surface. (572.136(c)(2))
__7. Align the test probe so that throughout its stroke and at contact with the knee it is within 2 degrees of horizontal and collinear with the longitudinal centerline of the femur. (572.136(c)(3))
__8. The probe is guided so there is no significant lateral, vertical or rotational movement during the impact with the knee. (572.136(c)(4))
__9. The data acquisition system, including transducers, must conform to the requirements of SAE Recommended Practice J211/1 MAR95 (572.136(m)) Class 600.
__10. Contact the knee with the test probe at a speed between 2.07 m/s and 2.13 m/s. (572.136(c)(5)) Neither the suspension hardware, suspension cables, nor other attachments to the probe, including the velocity vane, make contact with the dummy. (572.136(c)(6))

__11. Complete the following table:

Knee Impact Results (572.136(b)(1) and 572.136(c)(5))

Parameter	Specification	Result
Probe speed	2.07 m/s ≤ speed ≤ 2.13 m/s	
Peak resistance force*	3450 N ≤ force ≤ 4060 N	

*Force = impactor mass x deceleration (572.136(b)(2))

__12. Plots of acceleration versus time and force versus time follow this sheet.

_____ _____

Signature Date

DATA SHEET B9
RIGHT KNEE IMPACT TEST (572.136) (5th Female)

Dummy Serial Number _____ Test Date _____

Technician _____

__Pretest calibration
__Post test calibration verification

Test attempt no. ____ (when successive knee impact tests are necessary)

__1. It has been at least 30 minutes since the last knee impact test. (572.137(q))
__ N/A, ONLY one knee impact test performed
__2. The test fixture conforms to the specifications in Figure 14B.
__3. The knee assembly (880105-528R), lower leg structural replacement (880105-603), lower leg flesh (880105-601), ankle assembly (880105-660), foot assembly (880105-651), and femur load transducer (SA572-S14) (may use the load cell structural replacement (78051-319)) were used. (572.136(b)(1))
__4. The knee assembly soaked at a temperature between 18.9°C (66ºF) and 25.6°C (78ºF) and at a relative humidity from 10% to 70% for a period of at least four (4) hours prior to this test. (572.136(c)(1))
Record the maximum temperature _____
Record the minimum temperature _____
Record the maximum humidity _____
Record the minimum humidity _____
__5. Mount the test specimen and secure it to the rigid test fixture. (572.136(c)(2))
__6. No parts of the foot or tibia contact any exterior surface. (572.136(c)(2))
__7. Align the test probe so that throughout its stroke and at contact with the knee it is within 2 degrees of horizontal and collinear with the longitudinal centerline of the femur. (572.136(c)(3))
__8. The probe is guided so there is no significant lateral, vertical or rotational movement during the impact with the knee. (572.136(c)(4))
__9. The data acquisition system, including transducers, must conform to the requirements of SAE Recommended Practice J211/1 MAR95 (572.136(m)) Class 600.
__10. Contact the knee with the test probe at a speed between 2.07 m/s and 2.13 m/s. (572.136(c)(5)) Neither the suspension hardware, suspension cables, nor other attachments to the probe, including the velocity vane, make contact with the dummy. (572.136(c)(6))

__11. Complete the following table:

Knee Impact Results (572.136(b)(1) and 572.136(c)(5))

Parameter	Specification	Result
Probe speed	2.07 m/s ≤ speed ≤ 2.13 m/s	
Peak resistance force*	3450 N ≤ force ≤ 4060 N	

*Force = impactor mass x deceleration (572.136(b)(2))

__12. Plots of acceleration versus time and force versus time follow this sheet.

_____ _____

Signature Date

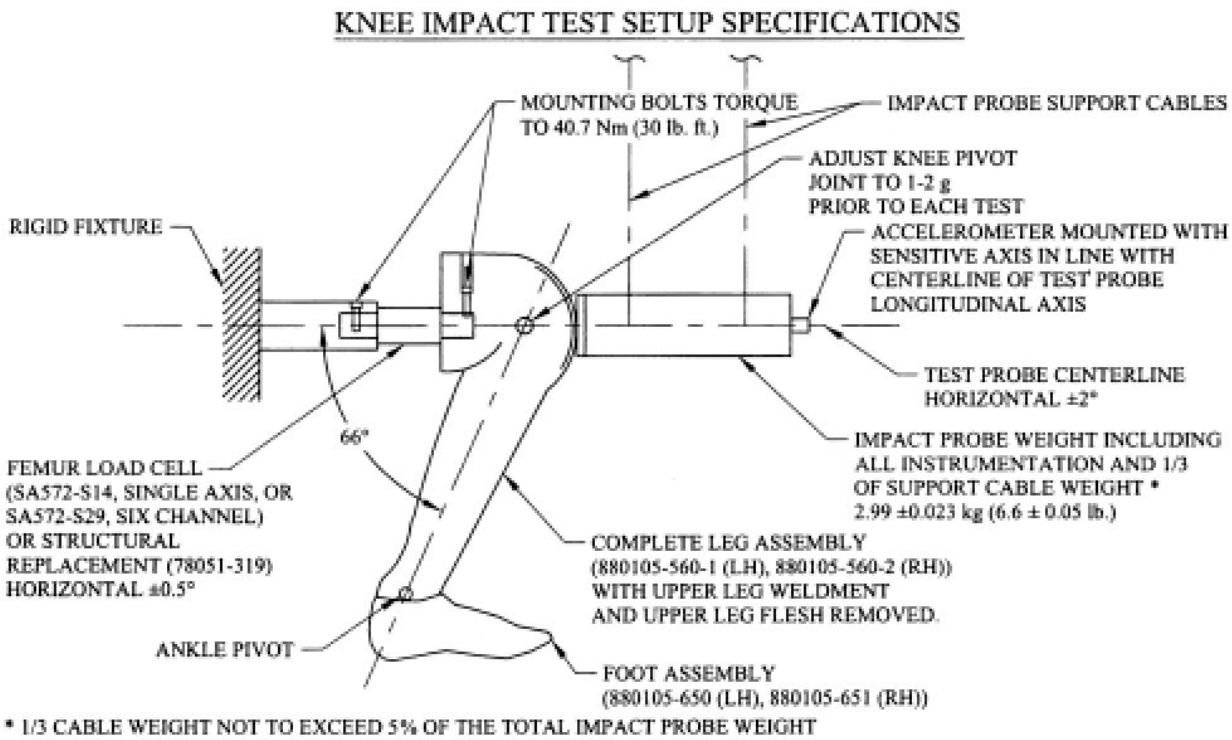

Probe specifications:

1. Rigid metallic construction, concentric about is longitudinal axis.
2. A mass of 2.99 ± 0.23 kg (6.6 ± 0.05 lbs). 1/3 of the weight of the suspension cables and their attachments to the impact probe must be included in the calculation of mass, and such components may not exceed 5 percent of the total weight of the test probe.
3. Minimum mass moment of inertia of 209 kg-cm^2 (0.177 lbs-in-sec^2) in yaw and pitch about the center of gravity.
4. The impacting end of the probe is perpendicular to and concentric with the longitudinal axis. It must have a flat, continuous, and non-deformable face with diameter of 76.2 ± 0.2mm (3.0 ± 0.01 in) and a maximum edge radius of 7.6 to 12.7 mm (0.3 to 0.5 in).
5. The impactor is a cylinder with a diameter of 76.2-76.4 mm (3.0-3.1 in) and it is at least 12.5 mm (0.5 in) long.
6. The probe's end opposite to the impact face must have provisions for mounting of an accelerometer with its sensitive axis collinear with the longitudinal axis of the probe.
7. The impact probe shall have a free air resonant frequency of not less than 1000 Hz.

FIGURE 14B

DATA SHEET B10
PART 572 INSTRUMENTATION CALIBRATION INFORMATION

I.D. NO.	MANUFACTURER	MODEL NO.	SERIAL NO.	DATE OF LAST CALIBRATION	DATE OF NEXT CALIBRATION
DUMMY INSTRUMENTATION					
HEAD ACCELEROMETERS					
(1) LONGITUDINAL					
(2) LATERAL					
(3) VERTICAL					
NECK TRANSDUCER					
CHEST ACCELEROMETERS					
(1) LONGITUDINAL					
(2) LATERAL					
(3) VERTICAL					
CHEST POTENTIOMETER					
FEMUR LOAD CELLS					
(1) RIGHT FEMUR					
(2) LEFT FEMUR					
LABORATORY INSTRUMENTATION					
NECK PENDULUM ACCELEROMETER					
THORAX PENDULUM ACCELEROMETER					
KNEE PENDULUM ACCELEROMETER					
NECK ROTATION TRANSDUCER 1 (OPTIONAL)					
NECK ROTATION TRANSDUCER 2 (OPTIONAL)					

LABORATORY TECHNICIAN: _____

APPENDIX C

PART 572N (6-YEAR OLD) DUMMY
PERFORMANCE CALIBRATION TEST PROCEDURE

APPENDIX C
PART 572, SUBPART N DUMMY PERFORMANCE CALIBRATION TEST PROCEDURE

1. PURPOSE AND APPLICATION 1
2. GENERAL REQUIREMENTS 1
3. SECURITY 1
4. GOOD HOUSEKEEPING 2
5. TEST SCHEDULING AND MONITORING 2
6. TEST DATA DISPOSITION 2
7. GOVERNMENT FURNISHED PROPERTY (GFP) 3
8. CALIBRATION AND TEST INSTRUMENTATION 3
9. PHOTOGRAPHIC DOCUMENTATION 4
10. DEFINITIONS 4
11. PRETEST REQUIREMENTS 5
    11.1 TRANSDUCER REQUIREMENTS 5
    11.2 OTHER TRANSDUCER CONDITIONS 6
    11.3 THORAX IMPACTOR PROBE (572.127(a)) 6
    11.4 KNEE IMPACTOR PROBE (572.127(b)) 7
    11.5 GENERAL TEST CONDITIONS 10
12. CALIBRATION TEST EXECUTION 10
13. POST TEST REQUIREMENTS 10
14. REPORTS 10
    14.1 APPARENT NONCONFORMANCE 10
    14.2 CALIBRATION DOCUMENTATION 11
15. DATA SHEETS 12
    DATA SHEET C1 12
    DATA SHEET C2 14
    DATA SHEET C3 21
    DATA SHEET C4 24
    DATA SHEET C5 26
    DATA SHEET C6 31
    DATA SHEET C7 36
    DATA SHEET C8 39
    DATA SHEET C9 41
    DATA SHEET C10 44

1. PURPOSE AND APPLICATION

The purpose of this laboratory procedure is to provide dummy users (independent testing laboratories under contract with the Office of Crashworthiness Standards) with standard test procedures for performing receiving-inspection and performance calibration tests on the Part 572, Subpart N dummy so that repetitive and correlative test results can be obtained. The following tests have been developed to establish a uniform calibration procedure for all users as the means of verifying the performance of the dummy.

A. EXTERNAL DIMENSIONS (drawing 127-0000 sheet 5 of 6, & PADI)

B. HEAD DROP TEST (572.122)

C. NECK FLEXION TEST (572.123(b)(1))

D. NECK EXTENSION TEST 572.123(b)(2)

E. THORAX IMPACT TEST ((572.124)

F. TORSO FLEXION (572.125)

G. KNEE IMPACT TESTS (572.126)

This laboratory procedure for the calibration of Part 572, Subpart N dummies must be used by National Highway Traffic Safety Administration (NHTSA) contract laboratories performing NCAP testing for the Office of Crashworthiness Standards (OCWS).

2. GENERAL REQUIREMENTS

The Code of Federal Regulations (49CFR), Parts 571 and 572, was amended to adopt the Hybrid III, 6-Year-Old Child Dummy as the means of determining a vehicle's conformance to the performance requirements of FMVSS 208. Each Part 572, Subpart N dummy used in an NCAP test must meet the specifications and performance criteria of Part 572 before and after each vehicle crash test in order to be an acceptable test tool.

The Part 572, Subpart N Hybrid III, 6-Year-Old Child Dummy consists of components and assemblies specified in the drawing and specifications package which is available from Reprographics Technologies, 9000 Virginia Manor Road, Beltsville, MD 20705, telephone - (301) 419-5070.

3. SECURITY

All NHTSA Part 572, Subpart N test dummies delivered to the contract laboratory as Government Furnished Property (GFP) will be stored in a safe and secure area such as a dummy calibration laboratory. The contractor is financially responsible for any acts of theft and/or vandalism which occur during the storage of GFP. Any security problems shall be reported by telephone to the Industrial Property Manager (IPM), Office of Contracts and Procurement, within two working days after the incident. A letter containing specific details of the security problem will be sent to the IPM (with copy to the COTR) within 48 hours.

The contractor is responsible for maintaining the NHTSA test dummies in good working order, and shall protect and segregate the data that evolves from conducting Part 572, Subpart N dummy calibration tests before and after each vehicle crash usage.

No Information concerning the Part 572, Subpart N dummy calibration data shall be released to anyone except the COTR, unless specifically authorized by the COTR or the COTR's Branch or Division Chief.

NOTE: No individuals, other than contractor personnel directly involved in the dummy calibration test program, shall be allowed to witness dummy calibration tests unless specifically authorized by the COTR.

4. GOOD HOUSEKEEPING

Contractors shall maintain the entire dummy calibration laboratory, test fixtures, and instrumentation in a neat, clean, and painted condition with test instruments arranged in an orderly manner consistent with good test laboratory housekeeping practices.

5. TEST SCHEDULING AND MONITORING

The Part 572, Subpart N dummies are being calibrated as test tools to be used in NCAP vehicle crash tests. The schedule for these performance calibration tests must be correlated with that of the vehicle tests. In addition, all testing shall be coordinated to allow monitoring by the COTR.

6. TEST DATA DISPOSITION

The contractor shall make all dummy calibration data available to the COTR for review and analysis as required. All calibration test data for each particular Part 572, Subpart N dummy will be sent to the COTR with each test report.

All backup data sheets, strip charts, recordings, plots, technicians’ notes, etc. shall be either sent to the COTR or destroyed at the conclusion of each delivery order, purchase order, etc.

7. GOVERNMENT FURNISHED PROPERTY (GFP)

Part 572, Subpart N test dummies will be furnished to the contract laboratory by the OCWS. The dummies shall be stored in an upright sitting position with the weight supported by the internal structure of the pelvises. The dummies' heads shall be held upright by using a strap around the chest or the base of the neck so that the neck is not supporting the weight of the dummy. These dummies shall be stored in a secured room that is kept between 55ºF and 85ºF. The contractor will check dummy components for damage after each crash test and complete a dummy damage checklist (as part of the NCAP procedure), which will be included with the dummy calibration, if requested. The COTR will be kept informed of the dummies' condition so that replacement parts can be provided. The dummies will be calibrated by the contractor according to the schedule indicated in the NCAP test procedure.

8. CALIBRATION AND TEST INSTRUMENTATION

Before the contractor initiates the dummy performance calibration test program, a test instrumentation calibration system must be implemented and maintained in accordance with established calibration practices. The calibration system shall be set up and maintained as follows:

A. Standards for calibrating the measuring and test equipment shall be stored and used under appropriate environmental conditions to assure their accuracy and stability.

B. All measuring instruments and standards shall be calibrated by the contractor, or a commercial facility, against a higher order standard at periodic intervals not exceeding 12 months for instruments and 12 months for calibration standards. Records, showing the calibration traceability to the National Institute of Standards and Technology (NIST), shall be maintained for all measuring and test equipment.

C. All measuring and test equipment and measuring standards shall be labeled with the following information:

1. Date of calibration

2. Date of next scheduled calibration

3. Name of the technician who calibrated the equipment

D. The contractor shall provide a written calibration procedure that includes, as a minimum, the following information for all measurement and test equipment:

1. Type of equipment, manufacturer, model number, etc.

2. Measurement range

3. Accuracy

4. Calibration interval

5. Type of standard used to calibrate the equipment (calibration traceability of the standard must be evident)

6. The actual procedures and forms used to perform calibrations.

E. The contractor shall keep records of calibrations for all test instrumentation in a manner that assures the maintenance of established calibration schedules. All such records shall be readily available for inspection when requested by the COTR. The calibration system will need the written acceptance of the COTR before testing begins.

F. Test equipment shall receive a calibration check immediately prior to and after each test. This check shall be recorded by the test technician(s) and submitted with the final report.

G. Anthropomorphic test devices shall be calibrated as indicated in NCAP test procedure. These calibrations shall be submitted with the final report.

9. PHOTOGRAPHIC DOCUMENTATION

Provide still photographs (color prints properly focused for clear images, no more than two (2) per 8.5”x11” sheet) of post test damage resulting from the vehicle crash test.

10. DEFINITIONS

PADI: Procedures for Assembly, Disassembly, and Inspection

11. PRETEST REQUIREMENTS

11.1 TRANSDUCER REQUIREMENTS

The contractor shall provide and install the following instrumentation to the GFP dummies (excluding the chest deflection transducer).

A. HEAD – The head accelerometers shall have dimensions, response characteristics and sensitive mass locations specified in drawing SA572-S4 and be mounted in the head as shown in drawing 127-0000 sheet 3. (572.127(c))

Three accelerometers shall be mounted in the head cavity to measure orthogonal accelerations (Ax, Ay, Az) at the center of gravity (CG) of the head assembly.

B. NECK – The upper neck force transducer shall have the dimensions, response characteristics, and sensitive axis locations specified in drawing SA572-S11 and shall be mounted in the head neck assembly as shown in drawing 127-0000, sheet 3. (572.127(d))

C. CHEST – The chest accelerometers shall have the dimensions, response characteristics, and sensitive mass locations specified in drawing SA572-S4 and be mounted in the torso assembly in triaxial configuration at T4 as shown in drawing 127-0000 sheet 3. The chest accelerometers are not required for dummy calibration testing but are required for NCAP testing. (572.126(e))

The chest deflection transducer shall have the dimensions and response characteristics specified in drawing SA572-S50 and be mounted to the upper torso assembly as shown in drawing 127-0000 sheet 3. (572.137(f))

D. LEGS -- The single axis femur force transducer shall have the dimensions, response characteristics, and sensitive axis locations specified in drawing SA572-S10 and be mounted in the leg as shown in drawing 127-0000 sheet 3. The femur transducers are not required for calibration of the dummy but are required for FMVSS 208 testing. (572.137(j))

E. TEST FIXTURE – The neck pendulum, thorax and knee probe accelerometers shall have the dimensions and characteristics of drawing SA572-S4.

11.2 OTHER TRANSDUCER CONDITIONS

A. TRANSDUCER MOUNTS – The mountings for sensing devices shall have no resonance frequency less than 3 times the frequency range of the applicable channel class. (572.127(m))

B. TRANSDUCER SIGN CONVENTION - The sign convention for outputs of transducers mounted within the dummy that measure head and chest accelerations, chest deflection and femur loads are located in Figure 1C. For other transducers see SAE J1733DEC94. (572.127(l))

C. TRANSDUCER OUTPUT FILTERING - The outputs of acceleration and force-sensing devices installed in the dummy and in the test apparatus specified by this part are recorded with individual data channels. Each data channel will be comprised of a sensor, signal conditioner, data acquisition device, and all interconnecting cables, and must conform to the requirements of SAE Recommended Practice J211/1 MAR95, "Instrumentation for Impact Test," with channel classes as follows: (572.127(k))

1. Head acceleration	Class 1000 (572.127(k)(1))
2. Neck force	Class 1000 (572.127(k)(2)(i))
3. Neck pendulum acceleration	Class 180 (572.127(k)(2)(iii))
4. Neck moment transducers	Class 600 (572.127(k)(2)(ii))
5. Thorax and thorax pendulum acceleration	Class 180 (572.127(k)(3)(ii))
6. Sternum deflection	Class 600 (572.127(k)(3)(iii))
7. Knee pendulum acceleration	Class 600
8. Femur force	Class 600 (572.127(k)(6))
9. Torso flexion	Class 60

All filter classes should be of the "phaseless" type to be compatible with the "time" dependent test parameters.

11.3 THORAX IMPACTOR PROBE (572.127(a))

A. The test probe for thoracic impacts shall be of rigid metallic construction, concentric about its longitudinal axis.
B. It shall have a mass of 2.86 ± 0.02 kg (6.3 ± 0.05 lbs). 1/3 of the weight of the suspension cables and any attachments to the impact probe must be included in the calculation of mass, and such components may not exceed 5 percent of the total weight of the test probe.
C. It shall have a minimum mass moment of inertia of 160 kg-cm^2 (0.141 lbs-in-sec^2) in yaw and pitch about the center of gravity.
D. The impacting end of the probe is perpendicular to and concentric with the longitudinal axis. It must have a flat, continuous, and non-deformable face with

diameter of 101.6 ± 0.25 mm (4.00 ± 0.01 in) and an edge radius of 7.6-12.7 mm (0.3-0.5 in).

E. The impactor is a cylinder with a diameter of 101-103 mm (4.0-4.1 in) and it is at least 12.5 mm (0.5 in) long.
F. The probe's end opposite to the impact face must have provisions for mounting of an accelerometer with its sensitive axis collinear with the longitudinal axis of the probe.
G. The impact probe shall have a free air resonant frequency of not less than 1000 Hz in the direction of the longitudinal direction of the impactor..

11.4 KNEE IMPACTOR PROBE (572.127(b))

A. The test probe for knee impacts shall be of rigid metallic construction, concentric in shape and symmetric about is longitudinal axis.
B. It shall have a mass of 0.82 ± 0.02 kg (1.8 ± 0.05 lbs). 1/3 of the weight of the suspension cables and any attachments to the impact probe must be included in the calculation of mass, and such components may not exceed 5 percent of the total weight of the test probe.
C. It shall have a minimum mass moment of inertia of 34 kg-cm^2 (0.03 lbs-in-sec^2) in yaw and pitch about the center of gravity.
D. The impacting end of the probe is perpendicular to and concentric with the longitudinal axis. It must have a flat, continuous, and non-deformable face with a diameter of 76.2 ± 0.2 mm (3.00 ± 0.01 in) and a maximum edge radius of 7.6-12.7 mm (0.3-0.5 in).
E. The impactor is a cylinder with a diameter of 76-77 mm (3.0-3.1 in) and it is at least 12.5 mm (0.5 in) long.
F. The probe's end opposite to the impact face must have provisions for mounting of an accelerometer with its sensitive axis collinear with the longitudinal axis of the probe.
G. The impact probe shall have a free air resonant frequency of not less than 1000 Hz in the direction of the longitudinal direction of the impactor.

SIGN CONVENTION FOR PART 572 TEST DUMMIES

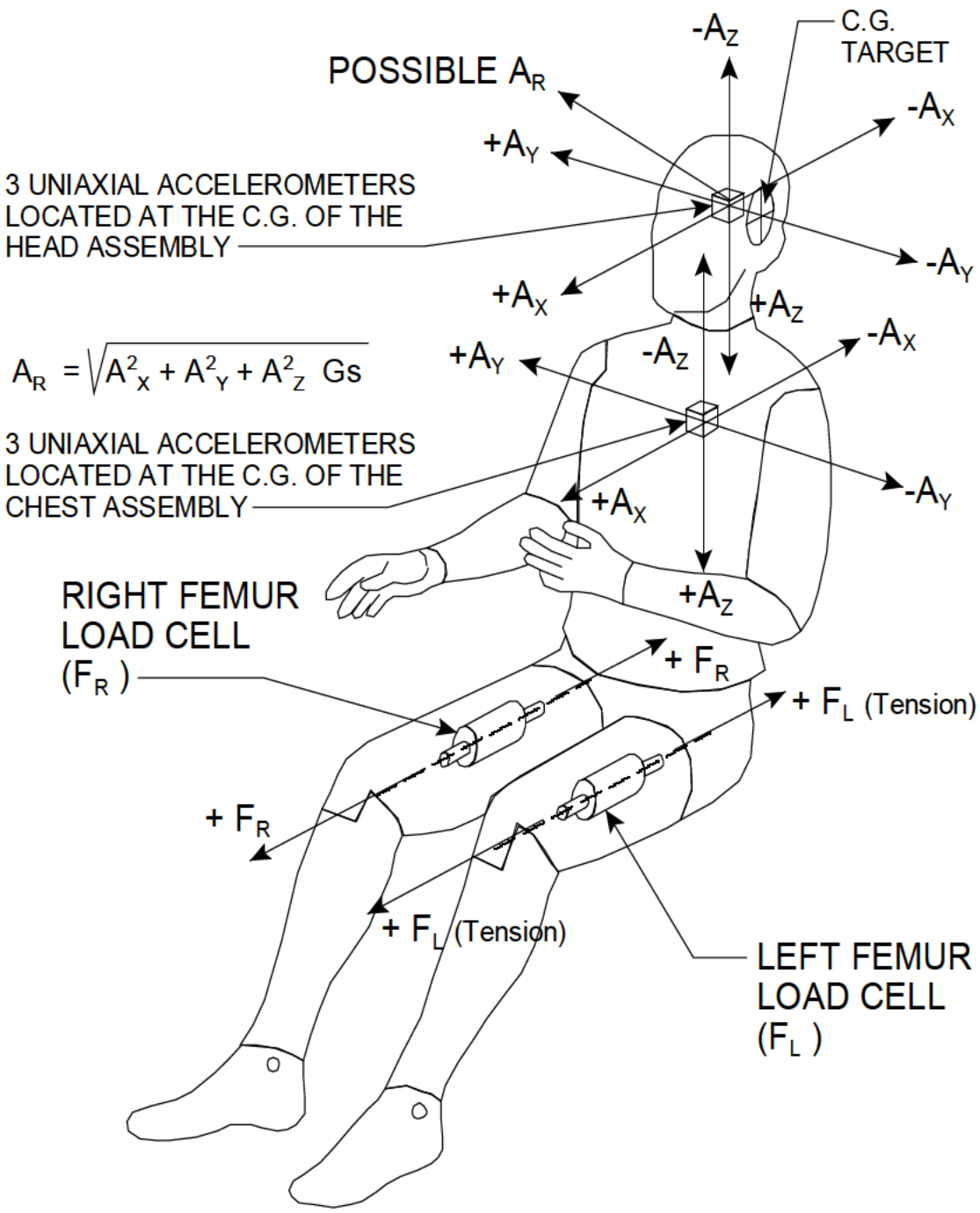

FIGURE 1C

TABLE 1C

SIGN CONVENTION FOR HYBRID III TRANSDUCER OUTPUTS	
BODY SEGMENT — MEASURED FORCE	**POSITIVE OUTPUT DIRECTION**
NECK FX SHEAR FY SHEAR FZ AXIAL MX MOMENT (ROLL) MY MOMENT (PITCH) MZ MOMENT (YAW)	 HEAD REARWARD OR CHEST FORWARD HEAD LEFTWARD, CHEST RIGHTWARD HEAD UPWARD, CHEST DOWNWARD LEFT EAR TOWARD LEFT SHOULDER CHIN TOWARD STERNUM CHIN TOWARD LEFT SHOULDER
FEMUR FX SHEAR FY SHEAR FZ AXIAL MX MOMENT (ROLL) MY MOMENT (PITCH) MZ MOMENT (YAW)	 KNEE UPWARD, UPPER FEMUR DOWNWARD KNEE RIGHTWARD, UPPER FEMUR LEFTWARD KNEE FORWARD (TENSION), PELVIS REARWARD KNEE LEFTWARD, HOLD UPPER FEMUR IN PLACE KNEE UPWARD, HOLD UPPER FEMUR IN PLACE KNEE ROTATED CCW WHEN FACING FRONT OF DUMMY
KNEE CLEVIS - FZ AXIAL	TIBIA DOWNWARD (TENSION), FEMUR UPWARD
UPPER TIBIA MX MOMENT MY MOMENT	 ANKLE LEFTWARD, HOLD KNEE IN PLACE ANKLE FORWARD, BOTTOM OF KNEE CLEVIS REARWARD
LOWER TIBIA FX SHEAR FY SHEAR FZ AXIAL MX MOMENT MY MOMENT	 ANKLE FORWARD, KNEE REARWARD ANKLE RIGHTWARD, KNEE LEFTWARD ANKLE DOWNWARD (TENSION), KNEE UPWARD ANKLE LEFTWARD, HOLD KNEE IN PLACE ANKLE FORWARD, BOTTOM OF KNEE CLEVIS REARWARD
CHEST DISPLACEMENT	CHEST COMPRESSED - NEGATIVE
KNEE SHEAR DISPLACEMENT	PUSH ON FRONT OF TIBIA - NEGATIVE

NOTE: DIRECTIONS ARE DEFINED IN RELATION TO A SEATED DUMMY

11.5 GENERAL TEST CONDITIONS

A. Surfaces of dummy components are not painted unless otherwise specified. (572.127(p))

B. Dummy performance tests of the same component, segment, assembly, or fully assembled dummy are separated in time by a period of not less than 30 minutes unless otherwise specified. (572.127(o))

C. Except for neck assembly and thorax assembly testing, the dummy performance tests are conducted at any temperature from 18.9°C (66ºF) to 25.6°C (78ºF) and at any relative humidity from 10% to 70% after exposure of the dummy to these conditions for a period of not less than 4 hours. For the neck assembly and thorax assembly, the temperature range is 20.6°C (69ºF) to 22.2°C (72ºF)

D. Dummy limb joints are set at 1 G, barely restraining the weight of the limb when it is extended horizontally. The force required to move a limb segment does not exceed 2 Gs throughout the range of limb motion. (572.127(n))

E. Dummies will be clothed for the thorax calibration tests with a cotton stretch above-the-elbow sleeved shirt and above-the-knee pants. (572.124(c)(2))

12. CALIBRATION TEST EXECUTION

Complete the Data Sheets in section 15.

13. POST TEST REQUIREMENTS

The contractor shall verify all instrumentation and check data sheets and photographs. Make sure data is recorded in all data blocks on every performance calibration test data sheet.

14. REPORTS

14.1 APPARENT NONCONFORMANCE

During a calibration verification, any indication of apparent nonconformance to the requirements of Regulation P572 shall be communicated by telephone to the COTR within 24 hours with written notification mailed within 48 hours (Saturdays and Sundays excluded). Written notification shall be submitted with a copy of the particular test data sheet(s) and preliminary data plot(s).

In the event of an apparent nonconformance, a calibration check of some critically sensitive test equipment and instrumentation may be required for verification of accuracy. The necessity for the calibration shall be at the COTR's discretion and shall be performed without additional costs to the OCWS.

14.2 CALIBRATION DOCUMENTATION

14.2.1 COPIES

Copies of the data sheets containing the calibration data for each Part 572, Subpart N dummy used in the vehicle test shall be submitted with the final NCAP test report for the vehicle.

Contractors are required to PROOF READ all Final Test Reports before submittal to the COTR. The OCWS will not act as a report quality control office for contractors. Reports containing a significant number of errors will be returned to the contractor for correction, and a "hold" will be placed on invoice payment for the particular test.

15. DATA SHEETS

DATA SHEET C1

DUMMY DAMAGE CHECKLIST (6-YEAR-OLD)

Dummy Serial Number _____ Test Date _____

Technician _____

This check sheet is completed as part of the calibration verification.

__ Perform general cleaning.

Dummy Item	***Inspect for***	***Comments***	***Damaged***	***OK***
Outer skin	Gashes, rips, cracks			
Head	Ballast secure			
	General appearance			
Neck	Broken or cracked rubber			
	Upper neck bracket firmly attached to the lower neck bracket			
	Looseness at the condyle joint			
	Nodding blocks cracked or out of position			
Spine	Broken or cracks in rubber.			
Ribs	Broken or bent ribs			
	Broken or bent rib supports			
	Damping material separated or cracked			
	Rubber bumpers in place			
Chest Displacement Assembly	Bent shaft			
	Slider arm riding in track			
Abdomen	Proper positioning			
Transducer leads	Torn cables			

Dummy Item	***Inspect for***	***Comments***	***Damaged***	***OK***
Accelerometer Mountings	Head mounting secure			
	Chest mounting secure			
Knees	Skin condition			
	Insert (do not remove)			
	Casting			
Limbs	Normal movement and adjustment			
Knee Sliders	Wires intact			
	Rubber returned to “at rest” position			
Pelvis	Broken			
Other				

If upon visual examination, damage is apparent in any of these areas, the appropriate engineer or engineering technician is to be consulted for a decision on repair or replacement of parts.

Repair or Replacement approved by:

_____ _____

Signature Date

Describe the repair or replacement of parts:

Checked by

_____ _____

Signature Date

DATA SHEET C2
EXTERNAL MEASUREMENTS (6-YEAR-OLD)
(See the PADI)

Dummy Serial Number _____ Test Date _____

Technician _____

__Pretest calibration
__Post test calibration verification

__1. Remove the dummy's chest jacket and the abdominal insert.
__2. Seat the dummy on a flat, rigid, smooth, clean, dry, horizontal surface as shown in Figure 3C and 4C. The seating surface is at least 215.9 mm (8.5 in) wide and 330.2 mm (13 in) in depth with a vertical section at least 215.9 mm (8.5 in) wide and 635 mm (25 in) high attached to the rear of the seating fixture. The dummy's midsagittal plane is vertical and centered on the test surface.
__3. Remove the four ¼-20 x 7/8 SHCS that attach the lumbar spine bracket to the pelvis. Torque the spine cable to 0.22 ± .02 NM (2.0 ± 0.2 in-lbs).

NOTE: At this point the thorax is to be inspected for damage. The thorax displacement transducer may be removed for calibration if required (pretest calibration only). Extreme caution is to be used so as not to damage the instrumentation cables.

__4. Reassemble the lumbar spine bracket to the pelvis.
__5. Secure the dummy to the test fixture so that the rear surfaces of the upper thorax and the buttock are tangent to the rear vertical surface of the fixture. (or as near tangent as possible). The dummy's midsagittal plane should be vertical.
__6. Position the dummy's H-point so it is 68.6 ± 5.1 mm (2.7 ± 0.2 in) above the horizontal seating surface and 94.0 ± 5.1 mm (3.7 ± 0.2 in) forward of the rear vertical surface of the fixture. The H-point is located 34.5 mm (1.36 in) forward and 48.7 mm (1.92 in) downward from the center pelvic angle reference hole.
__7. Extend the dummy's neck so that the plane perpendicular to the skull to skullcap interface is level both fore-and-aft and side-to-side, within 0.5 degrees. (The vertical mating surface between the skull and skull cap will be vertical.) The rear surface of the skullcap should be 20.3 ± 2.5 mm (0.8 ± 0.1 in) from the vertical surface of the test fixture. A strap or bungee cord may be placed around the forehead of the dummy to stabilize the head in this position.
__8. Position the upper and lower legs parallel to the midsagittal plane so the knee and ankle pivots centerlines are parallel, forming a 90° angle between the tibia and femur.
__9. Position the feet parallel to the dummy's midsagittal plane with the bottoms horizontal and parallel to the seating surface.
__10. Position the upper arms downward vertically so the centerlines of the shoulder yoke and elbow pivots are parallel.

__11. Position the lower arms horizontally so the centerline of the elbow and wrist pivot are parallel.
__12. Record the dimensions listed in following table, except for dimension Y and Z (reference figure 2C).
__13. Install the abdominal insert and chest jacket. Reposition the dummy on the test fixture. The head need not be level as previously specified.
__14. Mark the locations AA, and BB, and record the dimensions Y, Z, as specified in following table and figure 2C.

_____ _____
Signature Date

HYBRID III, PART 572, SUBPART N EXTERNAL DIMENSIONS				
DIMENSION	DESCRIPTION	DETAILS	ASSEMBLY DIMENSION (mm)	ACTUAL MEASUREMENT
A	TOTAL SITTING HEIGHT	Seat surface to highest point on top of the head.	622.3 - 647.7	
B	SHOULDER PIVOT HEIGHT	Centerline of shoulder pivot bolt to the seat surface.	348.0 - 363.2	
C	H-POINT HEIGHT	Reference	63.5 - 73.7	
D	H-POINT LOCATION FROM BACKLINE	Reference	88.9 - 99.1	
E	SHOULDER PIVOT FROM BACKLINE	Center of the shoulder clevis to the rear vertical surface of the fixture.	53.3 - 63.5	
F	THIGH CLEARANCE	Measured at the highest point on the upper femur segment.	88.9 - 104.1	
G	BACK OF ELBOW TO WRIST PIVOT	back of the elbow flesh to the wrist pivot in line with the elbow and wrist pivots	182.9 - 198.1	
H	HEAD BACK TO BACKLINE	Back of Skull cap skin to seat rear vertical surface (Reference)	17.8 - 22.8	
I	SHOULDER TO- ELBOW LENGTH	Measure from the highest point on top of the broad upper surface of clavicle link below the collar ot the lowest part of the flesh of the elbow in line with the elbow pivot bolt.	215.9 - 231.1	
J	ELBOW REST HEIGHT	Measure from the flesh below the elbow pivot bolt to the seat surface.	157.4 - 177.8	
K	BUTTOCK TO KNEE LENGTH	The forward most part of the knee flesh to the rear vertical surface of the fixture.	370.8 - 391.2	
L	POPLITEAL HEIGHT	Seat surface to the horizontal plane at the bottom of the feet.	269.2 - 289.6	
M	KNEE PIVOT HEIGHT	Centerline of knee pivot bolt to the horizontal plane of the bottom of the feet.	307.4 - 322.6	

HYBRID III, SUBPART N EXTERNAL DIMENSIONS, continued

DIMENSION	DESCRIPTION	DETAILS	ASSEMBLY DIMENSION (mm)	ACTUAL MEASUREMENT
N	BUTTOCK POPLITEAL LENGTH	The rearmost surface of the lower leg to the same point on the rear surface of the buttocks used for dim. “K”.	320.0 - 340.4	
O	CHEST DEPTH WITHOUT JACKET	Measured 330.2 ± 5.1 mm above seat surface	129.6 - 144.8	
P	FOOT LENGTH	Tip of toe to rear of heal	170.2 - 185.4	
Q	STATURE	(THEORETICAL) (Q = A - C - D + R + M)	1099.9 - 1181.1	N/A
R	BUTTOCK TO KNEE PIVOT LENGTH	The rear surface of the buttocks to the knee pivot bolt	342.9 - 363.3	
S	HEAD BREADTH	The widest part of the head	137.1 - 147.3	
T	HEAD DEPTH	Back of the head to the forehead	167.6 - 177.8	
U	HIP BREADTH	The widest part of the hips	208.3 - 223.5	
V	SHOULDER BREADTH	Outside shoulder edges, in line with the shoulder pivot bolts	259.1 - 274.3	
W	FOOT BREADTH	The widest part of the foot	62.3 - 77.5	
X	HEAD CIRCUMFERENCE	Measured at the point as in dim. “T”	510.5 - 530.9	
Y	CHEST CIRCUMFERENCE (WITH CHEST JACKET)	Measured 3330.2 ± 5.1 mm above seat surface	596.9 - 622.3	
Z	WAIST CIRCUMFERENCE (with chest jacket and abdominal insert)	Measured 158.8 ± 5.1 mm above seat surface	558.8 - 584.2	
AA	REFERENCE LOCATION FOR MEASUREMENT OF CHEST CIRCUMFERENCE	Reference	325.1 - 335.3	
BB	REFERENCE LOCATION FOR MEASUREMENT OF WAIST CIRCUMFERENCE	Reference	153.7 - 163.9	

EXTERNAL DIMENSION SPECIFICATIONS

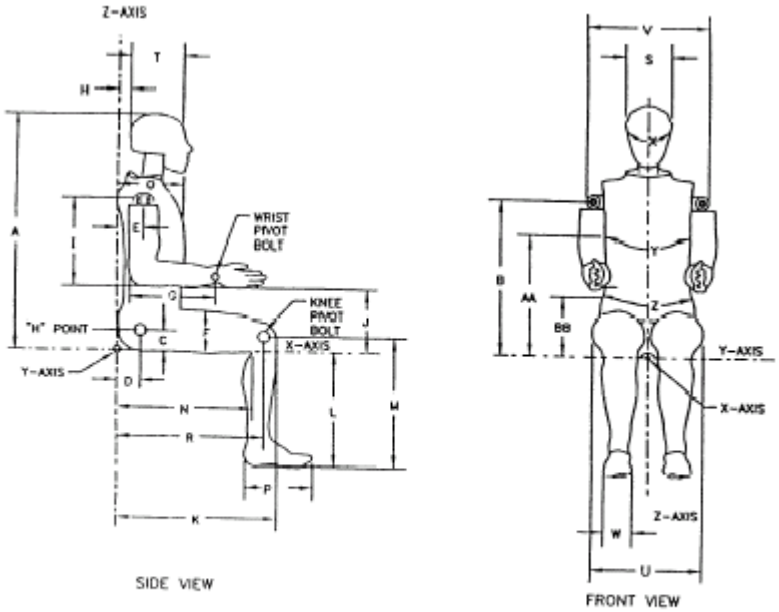

Notes:
Q = A - C -D + R + M

FIGURE 2C

EXTERNAL DIMENSIONS TEST SETUP

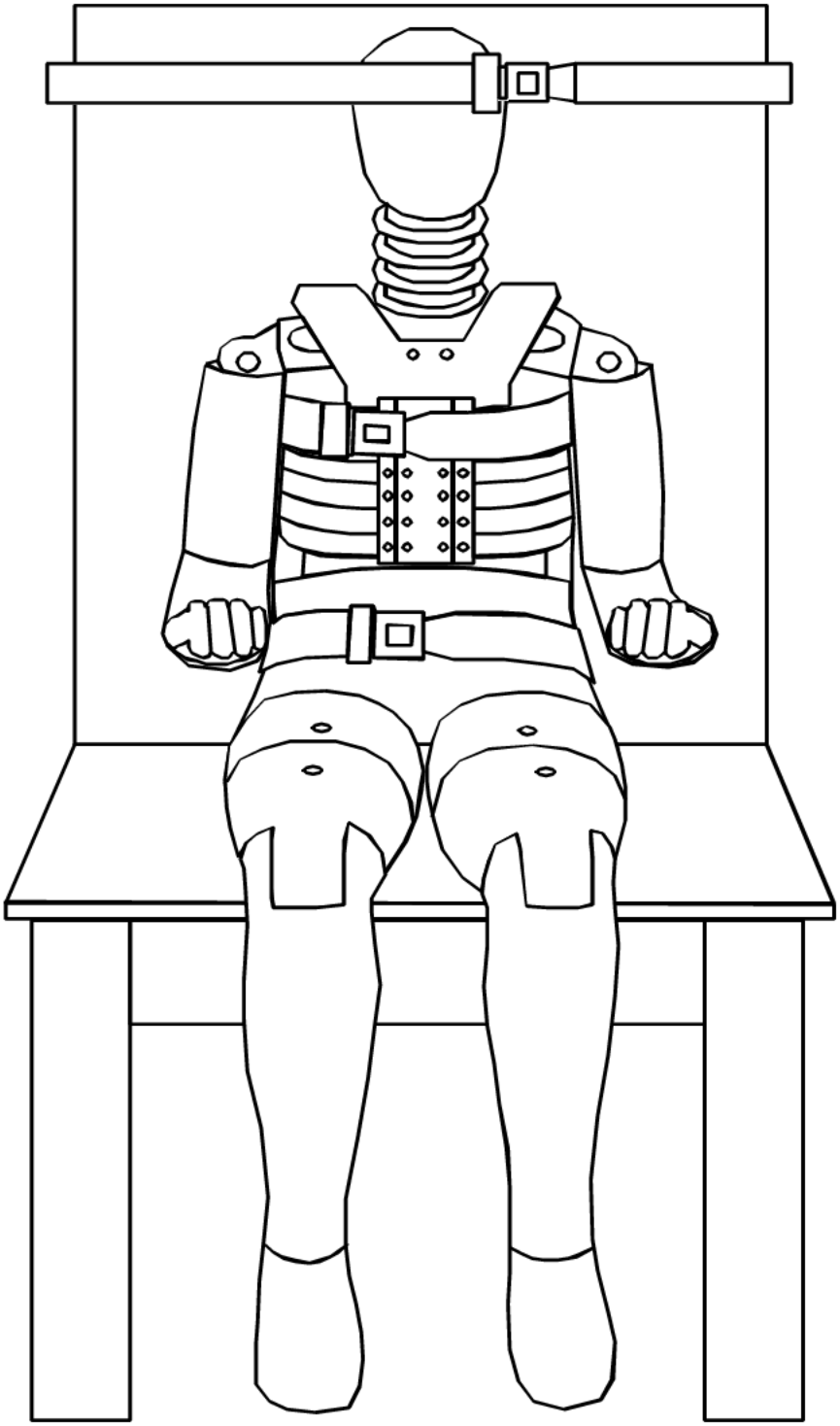

FIGURE 3C

EXTERNAL DIMENSIONS TEST SETUP

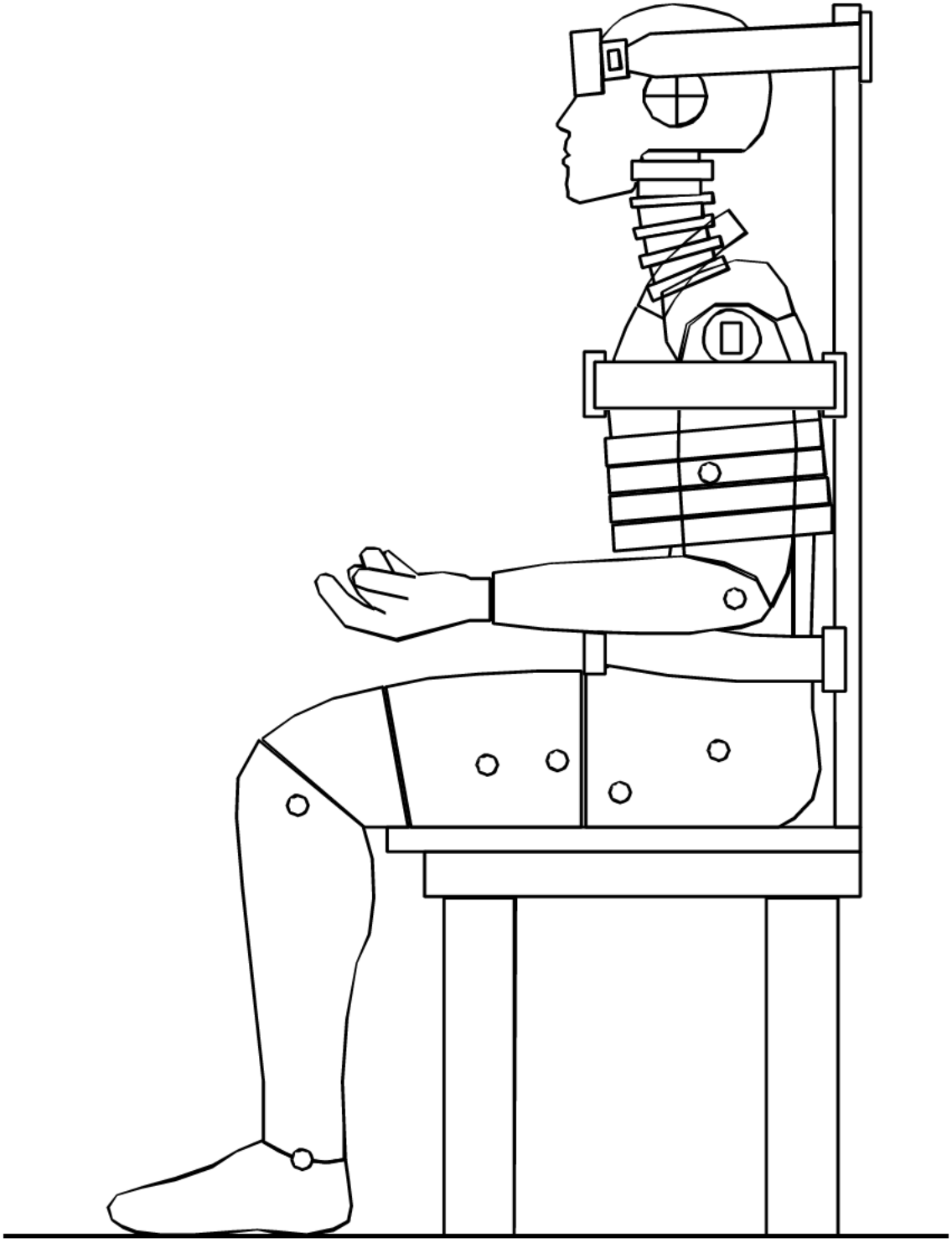

FIGURE 4C

DATA SHEET C3
HEAD DROP TEST (572.122) (6-YEAR-OLD)

Dummy Serial Number _____ Test Date _____

Technician _____

__Pretest calibration
__Post test calibration verification

Test attempt no. ____ (when successive head drops are necessary)

__1. It has been at least 2 hours since the last head drop. (572.122(c)(5))
__ N/A, ONLY one head drop performed
__2. The head assembly consists of the complete head (127-1000), a six-axis neck transducer (SA572-S11) or its structural replacement (78051-383X), a head to neck pivot pin (78051-339), and three (3) accelerometers (SA572-S4). (572.122(a))
__3. Torque the skull cap screws (10-32 x 1/2 SHCS) to 10.2 Nm.
__4. Accelerometers and their respective mounts are smooth and clean.
__5. The head accelerometer mounting plate screws ((10-24 x 3/8 SHCS) are torqued to 9.0 Nm.
__6. The data acquisition system, including transducers, conforms to the requirements of SAE Recommended Practice J211/1 MAR95. (572.126(m))
__7. The head assembly soaked at a temperature between 18.9^{o}C (66ºF) and 25.6^{o}C (78ºF) and at a relative humidity from 10% to 70% for a period of at least four (4) hours prior to a test. (572.122(c)(1))
Record the maximum temperature _____
Record the minimum temperature _____
Record the maximum humidity _____
Record the minimum humidity _____
__8. Visually inspect the head skin for cracks, cuts, abrasions, etc. Repair or replace the head skin if the damaged area is more than superficial.

Note: If the damage resulted from the vehicle crash test in which the dummy was an occupant, the damaged area is to be documented with photography and the post test calibration verification testing completed before any replacement or repairs are made.

Record findings and actions: _____
_____
_____
_____
_____

__9. Clean the impact surface of the skin and the impact surface of the fixture with isopropyl alcohol, trichloroethane or equivalent prior to the test. (572.122(c)(2))

__10. Suspend and orient the head assembly as shown in Figure 5C. The lowest point on the forehead is 376.0 ± 1.0 mm (14.8±0.04 inch) from the impact surface. (572.122(c)(3))
Record the actual distance _____

NOTE: The masses of the suspension device and the accelerometer cables are to be kept as lightweight as possible to minimize their effect on the test results.

__11. The 1.57 mm (0.062 inch) diameter holes located on either side of the dummy's head are equidistance within 2 mm from the impact surface. A typical test setup is shown in Figure 5C. (572.122(c)(3))
Record the right side distance_____
Record the left side distance _____

__12. The impact surface is clean and dry and has a micro finish in the range of 203.2×10^{-6} mm (8 micro inches) to 2032.0×10^{-6} mm (80 micro inches) (RMS). (572.122(c)(4))
Record actual micro finish _____

__13. The impact surface is rigidly supported. (572.122(c)(4))

__14. The impact surface is a flat horizontal steel plate 50.8 mm (2 inches) thick and 610 mm (24 inches) square. (572.122(c)(4))
Record thickness _____
Record width _____
Record length _____

__15. Drop the head assembly from a height of 376.0 ± 1.0 mm (14.8 inches ± 0.04 inches) by a means that ensures a smooth, instant release onto the impact surface. (572.122(b) & (572.122(c)(4))

__16. Complete the following table using channel class 1000 data. (572.122(b)):

Parameter	Specification	Result
Peak resultant acceleration	245 g ≤ x ≤ 300 g	
Resultant versus time history curve	Unimodal	
Oscillations after the main pulse	Less than 10% of the peak resultant acceleration	
Lateral acceleration	y-axis acceleration ≤ 15 g	

__17. Plots of the x, y, z, and resultant acceleration data follow this sheet.

_____ _____
Signature Date

HEAD DROP TEST SET-UP SPECIFICATIONS

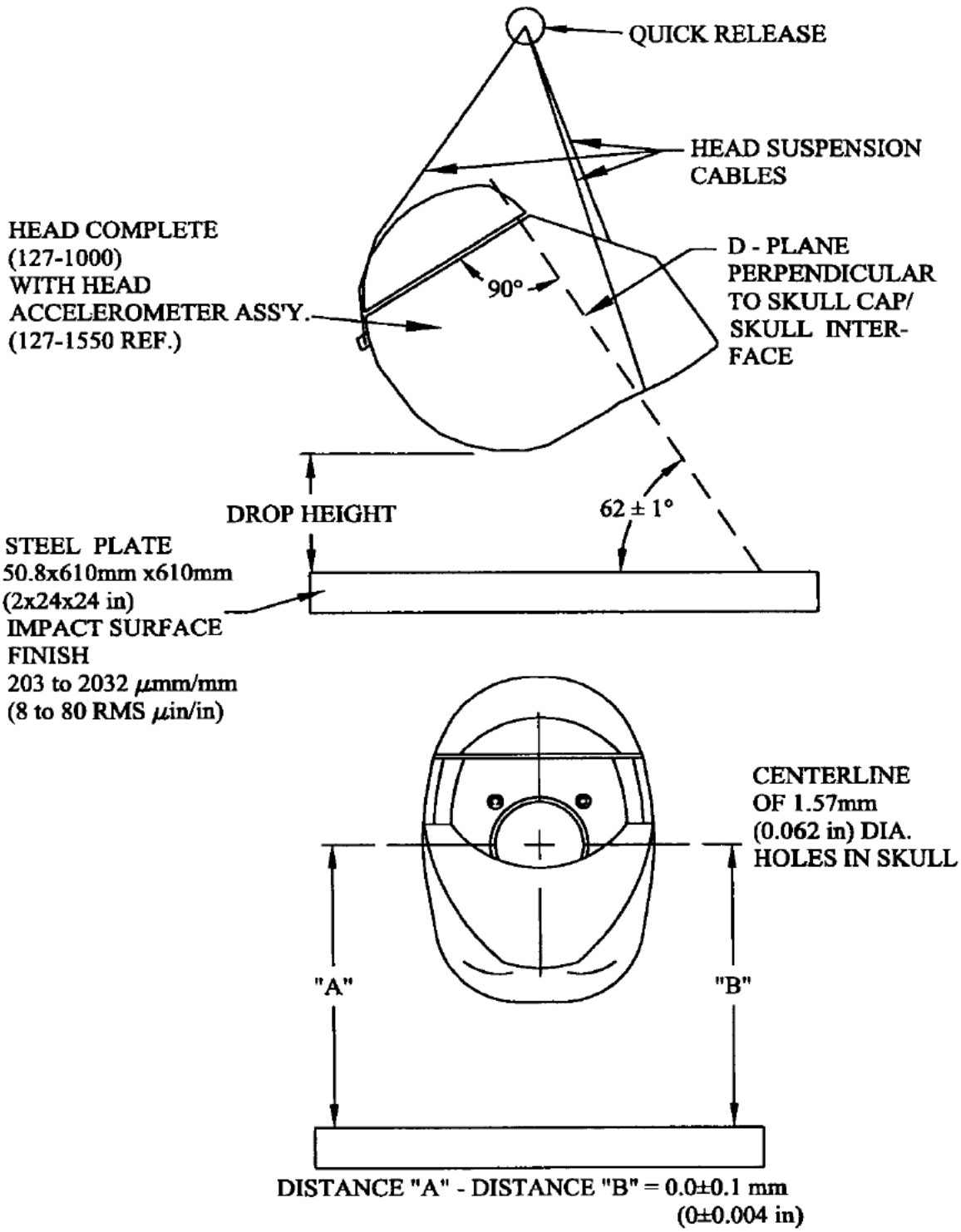

FIGURE 5C

DATA SHEET C4
NECK FLEXION TEST (572.123) (6-YEAR-OLD)

Dummy Serial Number _____ Test Date _____

Technician _____

__Pretest calibration
__Post test calibration verification

Test attempt no. ____ (when successive flexion tests are necessary)

__1. It has been at least 30 minutes since the last neck test. (572.127(o))
__ N/A, ONLY one neck test performed

__2. The components required for the neck tests include the head assembly (127-1000), neck (127-1015), pivot pin (78051-339), bib simulator (TE127-1025), neck bracket assembly (127-8221), six axis neck transducer (SA572-S11), neck mounting adaptor (TE-2208-001) and three accelerometers (SA572-S4) installed in the head assembly as specified in S572.122. Data from the accelerometers are not required. (572.123(b))

__3. The assembly soaked at a temperature between 20.6^{o}C (69°F) and 22.2^{o}C (72°F) and at a relative humidity from 10% to 70% for a period of at least four (4) hours prior to a test. (572.123(c)(1))
Record the maximum temperature _____
Record the minimum temperature _____
Record the maximum humidity _____
Record the minimum humidity _____

__4. Visually inspect neck assembly for cracks, cuts and separation of the rubber from the metal segments. Note: If the damage resulted from the vehicle crash test in which the dummy was an occupant, the damaged area is to be documented with photography and the post test calibration verification testing completed before any replacement or repairs are made.
Record findings and actions: _____
_____
_____
_____
_____

__5. Inspect the nodding blocks (127-1020, 127-1021) for splits or deformation. Inspect the Neck Cable (127-1016) for deformation. Inspect the mounting plate insert (910420-048) and the nylon shoulder bushing (9001373) and replace if they are torn or worn. When replacement is necessary, ONLY replace during pre-test calibration.
Record findings and actions: _____
_____
_____

__6, Torque the jam nut (9000341) on the neck cable (127-1016) to 0.23 ± 0.02 Nm (2.0 ± 0.2 in-lb). (572.123(c)(2)

__7. The data acquisition system, including transducers, conforms to the requirements of SAE Recommended Practice J211/1 MAR95. (572.127(k))

__8. The test fixture pendulum conforms to the specifications in Figure 6C. (572.123(c)(3))

__9. The head-neck assembly is mounted on the pendulum so the midsagittal plane of the head is vertical and coincides with the plane of motion of the pendulum longitudinal centerline as shown in Figure 7C for the flexion test. (572.123(c)(3))

__10. With the pendulum resting against the honeycomb material, the neck bracket was adjusted until the longitudinal centerline of the pendulum was perpendicular ± 1 degree to plane "D" on the dummy's head.

__11. Release the pendulum and allow it to fall freely from a height to achieve an impact speed of 4.83 m/s to 5.07 m/s as measured at the center of the pendulum accelerometer. (572.123(c)(4)(i))

__12. Complete the following table:

Neck Flexion Test Results (572.123(b)(1) & (572.123(c)(4)(i & ii)

Parameter		Specification	Result
Pendulum impact speed		4.83 m/s ≤ speed ≤ 5.07 m/s	
Pendulum ΔV with respect to impact speed	@ 10ms	1.2 m/s ≤ ΔV ≤ 1.6 m/s	
	@ 20 ms	2.4 m/s ≤ ΔV ≤ 3.4 m/s	
	@30ms	3.8 m/s ≤ ΔV ≤ 5.0 m/s	
Plane D Rotation		Peak moment* 27 Nm ≤ moment ≤ 33 Nm during the following rotation range 74° ≤ angle ≤ 92°	____Nm @ ___degrees
Positive Moment Decay** (Flexion)		Time to decay to 5 Nm 103 ms ≤ time ≤ 123 ms	

*Moment about the occipital condyle = M_y – (0.01778 m x F_x) (572.123(b)(1)(iii))

My = Moment in Nm measured by the transducer

Fx = Force, in N measured by the transducer

**Time zero is defined as the time of initial contact between the pendulum striker plate and the honeycomb material. (572.123(b)(3)

__14. Plots of acceleration, velocity, y-axis moment, and x-axis force and y-axis moment about the occipital condyle follow this sheet.

_____ _____

Signature Date

DATA SHEET C5
NECK EXTENSION TEST (572.123) (6-YEAR-OLD)

Dummy Serial Number _____ Test Date _____

Technician _____

__Pretest calibration
__Post test calibration verification

Test attempt no. ____ (when successive extension tests are necessary)

__1. It has been at least 30 minutes since the last neck test. (572.127(o))
__ N/A, ONLY one neck test performed

__2. The components required for the neck tests include the head assembly (127-1000), neck (127-1015), pivot pin (78051-339), bib simulator (TE127-1025), neck bracket assembly (127-8221), six axis neck transducer (SA572-S11), neck mounting adaptor (TE-2208-001) and three accelerometers (SA572-S4) installed in the head assembly as specified in S572.122. Data from the accelerometers are not required. (572.123(b))

__3. The assembly soaked at a temperature between 20.6°C (69°F) and 22.2°C (72°F) and at a relative humidity from 10% to 70% for a period of at least four (4) hours prior to a test. (572.123(c)(1))
Record the maximum temperature _____
Record the minimum temperature _____
Record the maximum humidity _____
Record the minimum humidity _____

__4. Visually inspect neck assembly for cracks, cuts and separation of the rubber from the metal segments. Note: If the damage resulted from the vehicle crash test in which the dummy was an occupant, the damaged area is to be documented with photography and the post test calibration verification testing completed before any replacement or repairs are made.
Record findings and actions: _____
_____
_____
_____
_____

__5. Inspect the nodding blocks (127-1020, 127-1021) for splits or deformation. Inspect the Neck Cable (127-1016) for deformation. Inspect the mounting plate insert (910420-048) and the nylon shoulder bushing (9001373) and replace if they are torn or worn. When replacement is necessary, ONLY replace during pre-test calibration.
Record findings and actions: _____
_____
_____

__6, Torque the jam nut (9000341) on the neck cable (127-1016) to 0.23 ± 0.02 Nm (2.0 ± 0.2 in-lb). (572.123(c)(2)

__7. The data acquisition system, including transducers, conforms to the requirements of SAE Recommended Practice J211/1 MAR95. (572.127(k))

__8. The test fixture pendulum conforms to the specifications in Figure 6C. (572.123(c)(3))

__9. The head-neck assembly is mounted on the pendulum so the midsagittal plane of the head is vertical and coincides with the plane of motion of the pendulum longitudinal centerline as shown in Figure 8C for the extension test. (572.123(c)(3))

__10. With the pendulum resting against the honeycomb material, the neck bracket was adjusted until the longitudinal centerline of the pendulum was perpendicular ± 1 degree to plane "D" on the dummy's head.

__11. Release the pendulum and allow it to fall freely from a height to achieve an impact speed of 4.18 m/s to 4.42 m/s as measured at the center of the pendulum accelerometer. (572.123(c)(4))

__12. Complete the following table:

Neck Extension Test Results (572.123(b)(2) & (572.123(c)(4)(i & ii)

Parameter		Specification	Result
Pendulum impact speed		4.18 m/s ≤ speed ≤ 4.42 m/s	
Pendulum ΔV with respect to impact speed	@ 10ms	1.0 m/s ≤ ΔV ≤ 1.4 m/s	
	@ 20 ms	2.2 m/s ≤ ΔV ≤ 3.0 m/s	
	@30ms	3.2 m/s ≤ ΔV ≤ 4.2 m/s	
Plane D Rotation		Peak moment* -24 Nm ≤ moment ≤ -19 Nm during the following rotation range 85° ≤ angle ≤ 103°	____Nm @ ___degrees
Negative Moment Decay** (Extension)		Time to decay to -5 Nm 123 ms ≤ time ≤ 147 ms	

*Moment about the occipital condyle = M_y – (0.01778 m x F_x) (572.123(b)(2)(iii)

My = Moment in Nm measured by the transducer

Fx = Force, in N measured by the transducer

**Time zero is defined as the time of initial contact between the pendulum striker plate and the honeycomb material. (572.123(b)(3)

__14 Plots of acceleration, velocity, y-axis moment, and x-axis force and y-axis moment about the occipital condyle follow this sheet.

_____ _____

Signature Date

PENDULUM SPECIFICATIONS

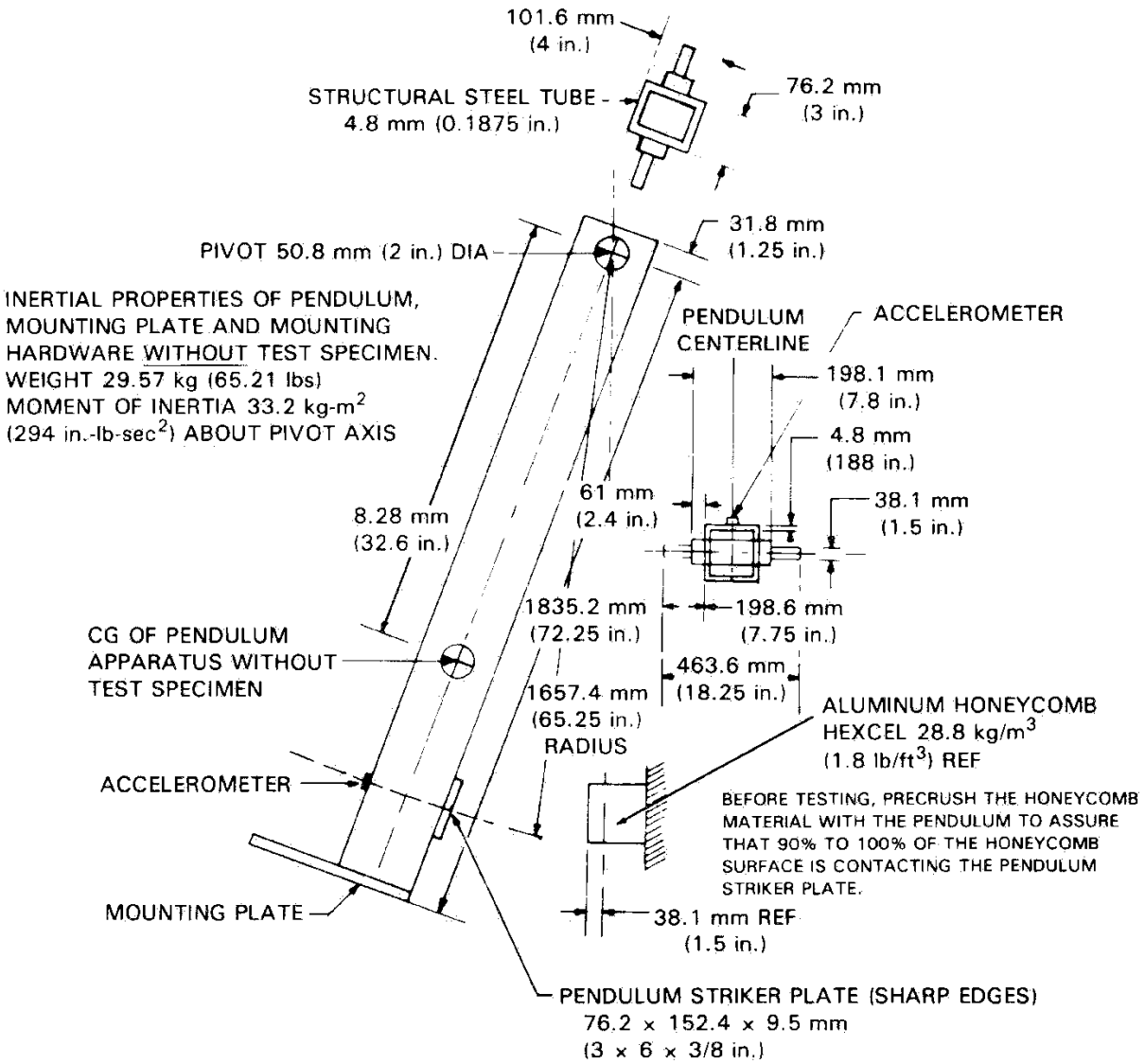

FIGURE 6C

NECK FLEXION TEST SET-UP SPECIFICATIONS

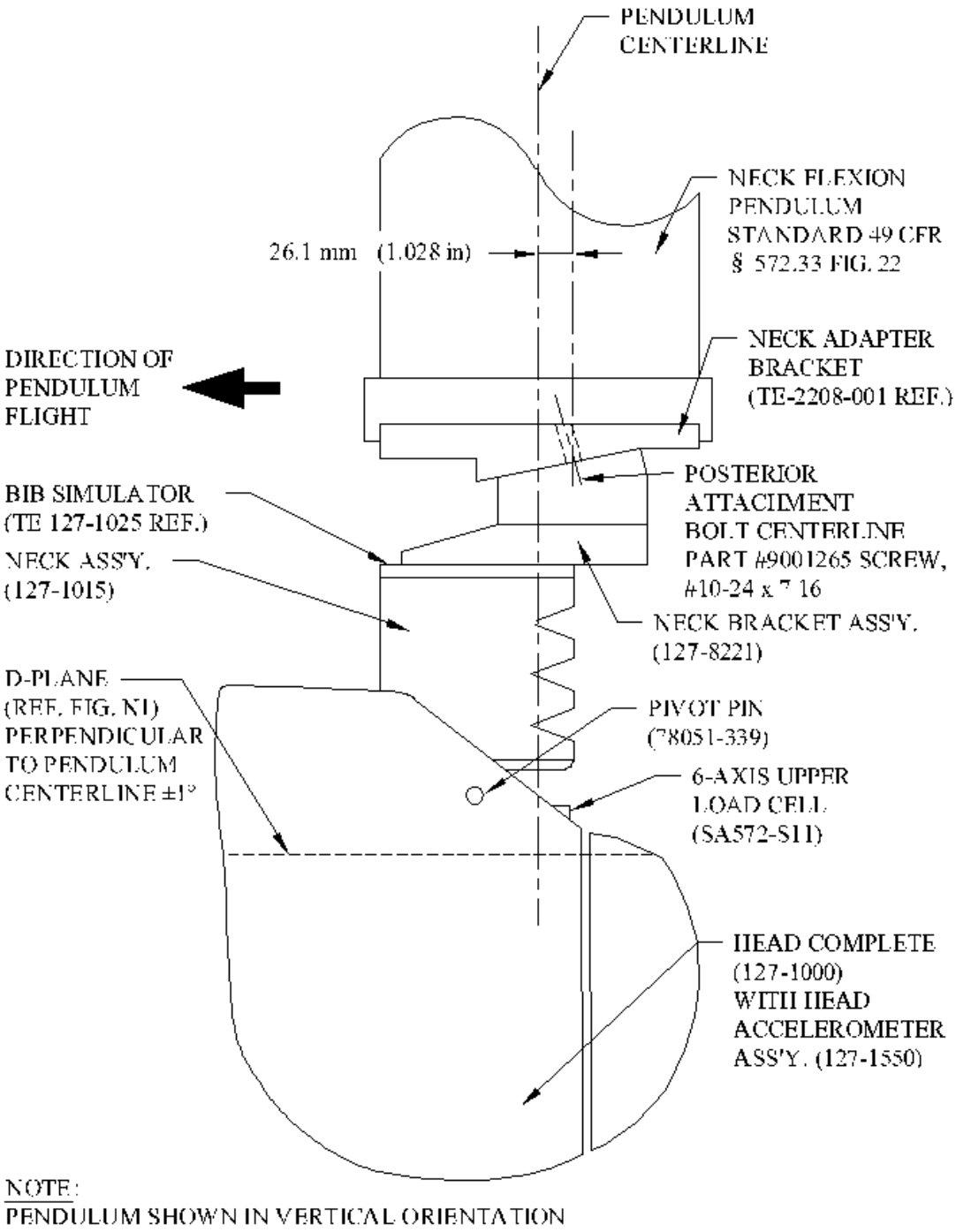

NOTE:
PENDULUM SHOWN IN VERTICAL ORIENTATION

FIGURE 7C

NECK EXTENSION TEST SET-UP SPECIFICATIONS

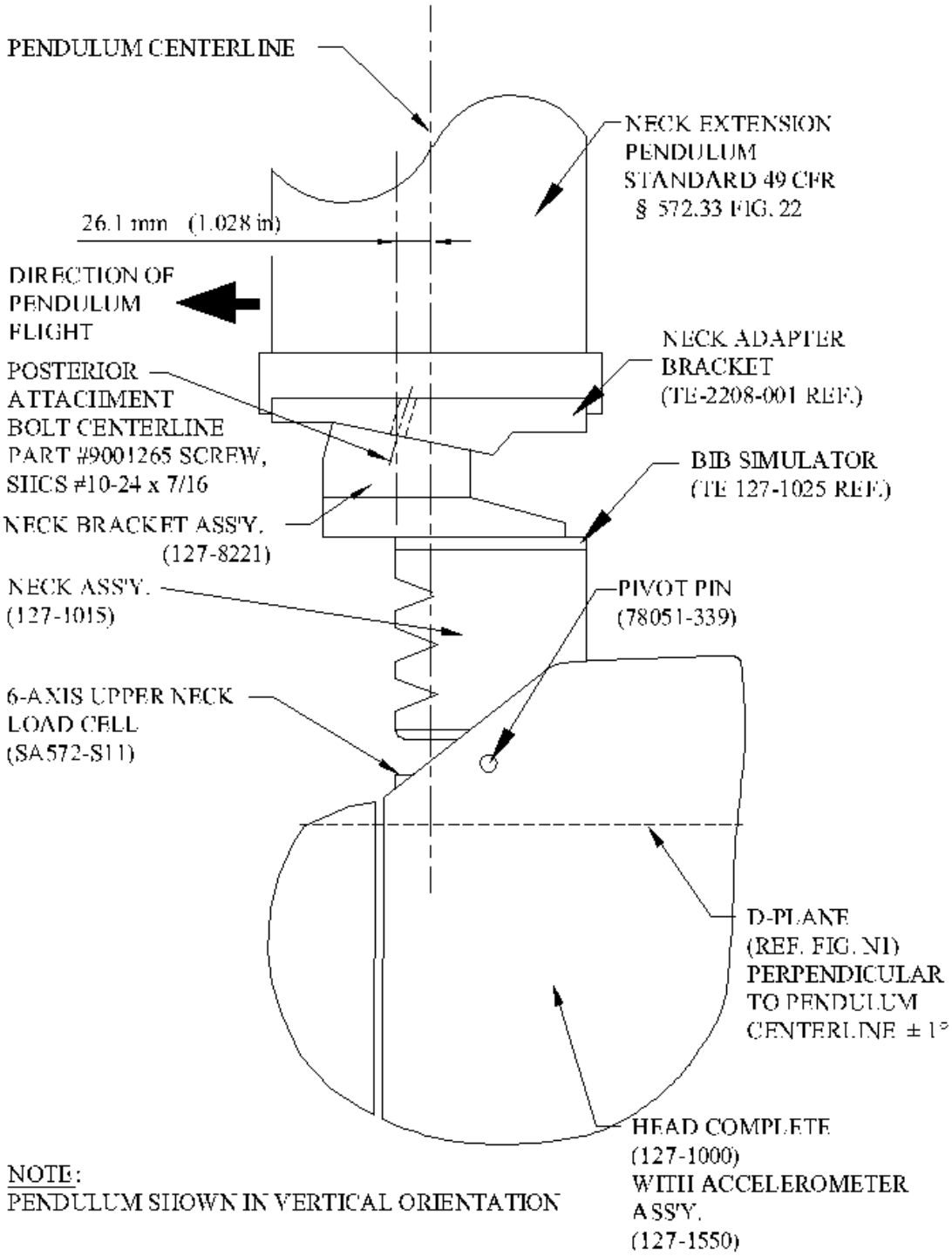

NOTE:
PENDULUM SHOWN IN VERTICAL ORIENTATION

FIGURE 8C

DATA SHEET C6
THORAX IMPACT TEST (572.134) (6-YEAR-OLD)

Dummy Serial Number _____ Test Date _____

Technician _____

__Pretest calibration
__Post test calibration verification

Test attempt no. ____ (when successive thorax impact tests are necessary)

__1. It has been at least 30 minutes since the last thorax impact test. (572.127(o))
__ N/A, ONLY one thorax impact test performed
__2. The test fixture conforms to the specifications in Figure 11C.
__3. The complete assembled dummy (127-0000) is used (572.124(b)).
__4. The dummy assembly soaked at a temperature between 20.6°C (69ºF) and 22.2°C (72ºF) and at a relative humidity from 10% to 70% for a period of at least four (4) hours prior to this test. (572.134(c)(1))
Record the maximum temperature _____
Record the minimum temperature _____
Record the maximum humidity _____
Record the minimum humidity _____
__5. Remove the chest skin and visually inspect the thorax assembly for cracks, cuts, abrasions, etc. Particular attention should be given to the rib damping material, chest displacement transducer assembly and the rear rib supports. Inspect for rib deformation using the chest depth gage. If any damage is noted repair and/or replace the damaged components unless the damage resulted from the vehicle crash test in which the dummy was an occupant in which case the damage must be documented and post test calibration verification testing completed before any repairs or replacements are made.
__ - No damage
__ - Damage from crash test, no repairs or replacement because this is a post test calibration verification. Record damage _____
_____
__ - The following repairs or replacement was performed. Record
_____
_____
__6. The dummy is dressed in a size 4 pair of long pants having a weight of less than 0.090 kg (0.2 lb) with the legs cut off sufficiently above the knee to allow the knee target to be visible. (572.124(c)(2))
__7. Seat the dummy, (chest skin still removed) without back support on the test fixture surface as shown in Figure 9C. The surface must be long enough to support the pelvis and outstretched legs. (572.124(c)(2))
__8. Level the ribs both longitudinally and laterally ± 0.5º and adjust the pelvis angle to 8º ± 2º. The angle may be measured at the pelvis lumbar joining surface.

__9. The midsagittal plane of the dummy is vertical within ± 1º. (572.124(c)(3))

__10. The longitudinal centerline of the test probe is centered within ±2.5 mm of the midsagittal plane of the dummy and is 12.7 mm ± 1mm below the horizontal peripheral centerline of the No. 3 rib and is within 0.5º of a horizontal line in the dummy's midsagittal plane. (572.124(c)(3))

__11. Record locations such as the rear surfaces of the thoracic spine and the lower neck bracket reference with respect to locations such as the rear surfaces of the thoracic spine and the lower neck bracket. These reference measurements are necessary to ensure the dummy is in the same position after the chest skin is installed. The reference locations must be accessible after installation of the chest skin. It may be necessary to leave the chest skin zipper unfastened until the references are checked and fasten it just prior to the test.

__12. Install the chest skin and reposition the dummy as described in the preceding paragraph using the reference measurements recorded.

__13. The dummy is dressed in a tight-fitting size 5 short sleeve shirt. (572.124(c)(2))

__14. Place the arm assemblies horizontal ± 2º and parallel to the midsagittal plane. The arms are held in place by tightening the adjustment nut which holds the arm yoke to the clavicle assembly.

__15. The data acquisition system, including transducers, must conform to the requirements of SAE Recommended Practice J211/1 MAR95 (572.127(k))

__16. Impact the anterior surface of the thorax with the test probe so the longitudinal centerline of the probe is within 2º of a horizontal line in the dummy's midsagittal plane at the moment of impact. (572.124(c)(4)) The velocity of the test probe at the time of impact is 6.71 m/s ± 0.12m/s. (572.124(b)) The probe is guided so there is no significant lateral, vertical or rotational movement during the impact. (572.124(c)(5) Neither the suspension hardware, suspension cables, nor other attachments to the probe, including the velocity vane, make contact with the dummy. (572.124(c)(6)

__17. Complete the following table:

Thorax Impact Results (572.124(b) and 572.124(b)(1)&(2)

Parameter*	Specification	Result
Test Probe Speed	6.59 m/s ≤ speed ≤ 6.83 m/s	
Chest Compression	38.0 mm ≤ compression ≤ 46.0 mm	
Peak force** between 38.0 and 46.0 mm chest compression	1150N ≤ peak force ≤ 1380N	
Peak force** between 12.5 and 38.0 mm chest compression	Peak force ≤ 1500 N	
Internal Hysteresis***	65% ≤ hysteresis ≤ 85%	

*Time zero is defined as the time of initial contact between the test probe and the chest skin.
**Force = impactor mass x acceleration

***Area under loading curve minus the area under the unloading curve divided by the area under the loading curve. (Figure 10C)

__18. Plots of chest compression, acceleration, force, force versus deflection follow this sheet.

_____ _____
Signature Date

THORAX IMPACT TEST SET-UP SPECIFICATIONS

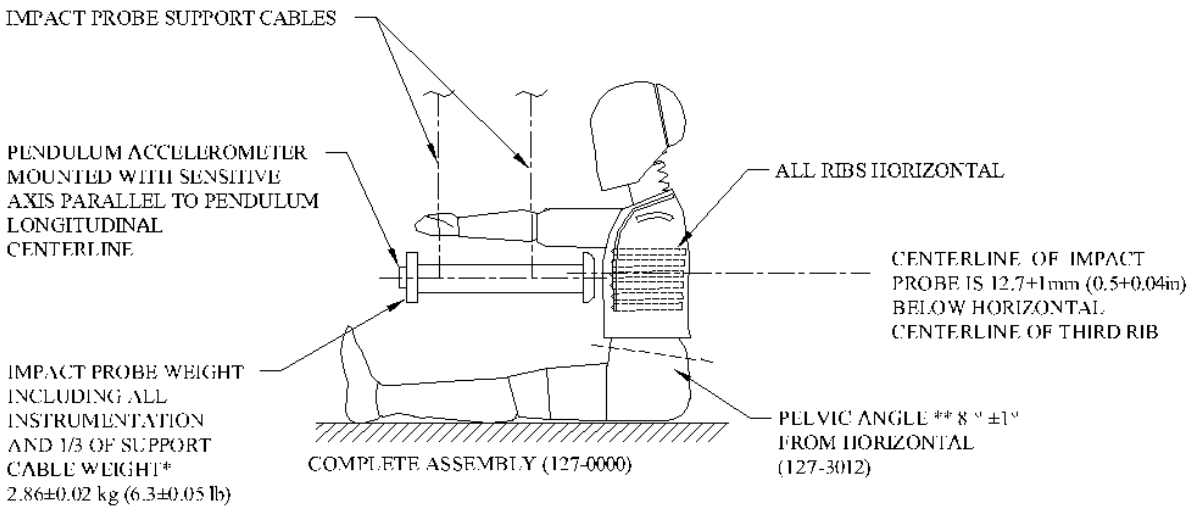

* 1/3 CABLE WEIGHT NOT TO EXCEED 5 % OF THE TOTAL IMPACT PROBE WEIGHT
** PELVIS LUMBAR JOINING SURFACE

Probe specifications:

1. Rigid metallic construction, concentric about its longitudinal axis.
2. A mass of 2.86 ± 0.02 kg (6.3 ± 0.05 lbs). 1/3 of the weight of the suspension cables and any attachments to the impact probe are included in the calculation of mass, and such components may not exceed 5 percent of the total weight of the test probe.
3. Minimum mass moment of inertia of 160 kg-cm^2 (0.141 lbs-in-sec^2) in yaw and pitch about the center of gravity.
4. The impacting end of the probe is perpendicular to and concentric with the longitudinal axis. It has a flat, continuous, and non-deformable face with diameter of 101.6 ± 0.25 mm (4.00 ± 0.01 in) and a edge radius of 7.6-12.7 mm (0.3-0.5 in).
5. The impactor is a cylinder with a diameter of 101-103 mm (4.0-4.1 in) and it is at least 12.5 mm (0.5 in) long.
6. The probe's end opposite to the impact face must have provisions for mounting of an accelerometer with its sensitive axis collinear with the longitudinal axis of the probe.
7. The impact probe shall have a free air resonant frequency of not less than 1000 Hz in the direction of the longitudinal direction of the impactor.

FIGURE 9C

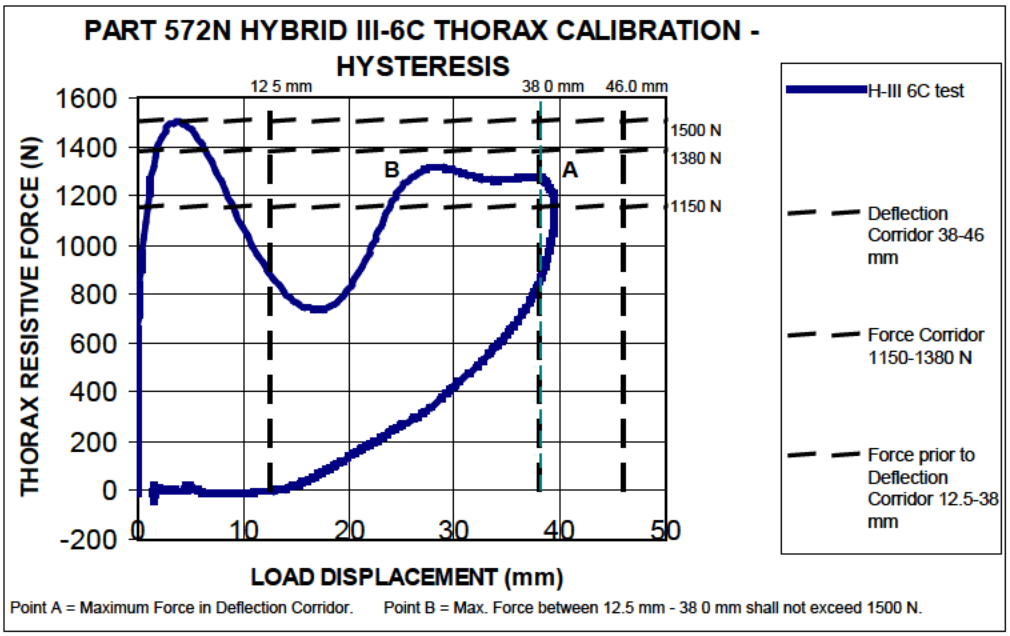
PART 572N HYBRID III-6C THORAX CALIBRATION - HYSTERESIS
12 5 mm
38 0 mm
46.0 mm
1500 N
1380 N
1150 N
B
A
THORAX RESISTIVE FORCE (N)
1600
1400
1200
1000
800
600
400
200
0
-200
0
10
20
30
40
50
LOAD DISPLACEMENT (mm)
H-III 6C test
Deflection Corridor 38-46 mm
Force Corridor 1150-1380 N
Force prior to Deflection Corridor 12.5-38 mm
Point A = Maximum Force in Deflection Corridor.
Point B = Max. Force between 12.5 mm - 38 0 mm shall not exceed 1500 N.

FIGURE 10C

DATA SHEET C7
TORSO FLEXION TEST (572.125) (6-YEAR-OLD)

Dummy Serial Number _____ Test Date _____

Technician _____

__Pretest calibration
__Post test calibration verification

Test attempt no. ____ (when successive torso flexion tests are necessary)

__1. It has been at least 30 minutes since the last torso flexion test. (572.127(o))
__ N/A, ONLY one torso flexion test performed
__2. The test fixture conforms to the specifications in Figure 11C.
__3. The complete assembled dummy (127-0000) is used (572.125(c)(2)).
__ with legs below the femurs.
__ without legs below the femurs.
__4. The dummy assembly soaked at a temperature between 18.9^{o}C (66ºF) and 25.6^{o}C (78ºF) and at a relative humidity from 10% to 70% for a period of at least four (4) hours prior to this test. (572.135(c)(1))
Record the maximum temperature _____
Record the minimum temperature _____
Record the maximum humidity _____
Record the minimum humidity _____
__5. Secure the pelvis to the fixture at the pelvis instrument cavity rear face by threading four ¼x20x½ inch cap screws into the available threaded attachment holes. Tighten the mountings so that the test material is rigidly affixed to the test fixture and the pelvic lumbar joining surface is horizontal. (572.125(c)(3))
__6. Attach the loading adapter bracket to the spine of the dummy as shown in Figure 11C**.** (572.125(c)(6))
__7. Flex the dummy forward and back 3 times such that the angle reference plane moves between 0° and 30° with respect to the vertical transverse plane. (572.125(c)(4))
__8. Support the dummy such that the angle reference plane is at or near 0° (vertical with respect to the vertical transverse plane). Wait at least 30 minutes before continuing. (572.125(c)(4))
__10. Remove all external support that was implemented in 9 above. (572.125(c)(5))
__11. Measure the initial orientation angle of the torso reference plane of the seated, unsupported dummy. (572.135(c)(5))
Record reference plane angle (max. allowed 22°)_____
__12. Attach the pull cable and the load cell. (572.125(c)(6))
__13. Apply a tension force in the midsagittal plane to the pull cable at any upper torso deflection rate between 0.5^{o} and 1.5^{o} per second, until the angle reference plane is at 45° ± 0.5^{o} of flexion relative to the vertical transverse plane. (572.125(c)(7))
__14. Maintain angle reference plane at 45° ± 0.5^{o} of flexion for 10 seconds. (572.125(c)(8))
__15. As quickly as possible release the force applied to the attachment bracket. (572.125(c)(9))

__16. 3 minutes after the release of the force, measure the reference plane angle. (572.125(c)(9))

__17. Complete the following table:

Torso Flexion Results (572.125(b), 572.125(c)(7), (572.125(c)(8))

Parameter	Specification	Result
Initial ref. plane angle	Angle ≤ 22°	
Torso rotation rate	0.5^o/s ≤ rate ≤ 1.5^o/s	
Force at 45° ±0.5^o	147 N ≤ force ≤ 200 N	
Final ref. plane angle	Initial ref. plane angle ±8°	

_____ _____

Signature Date

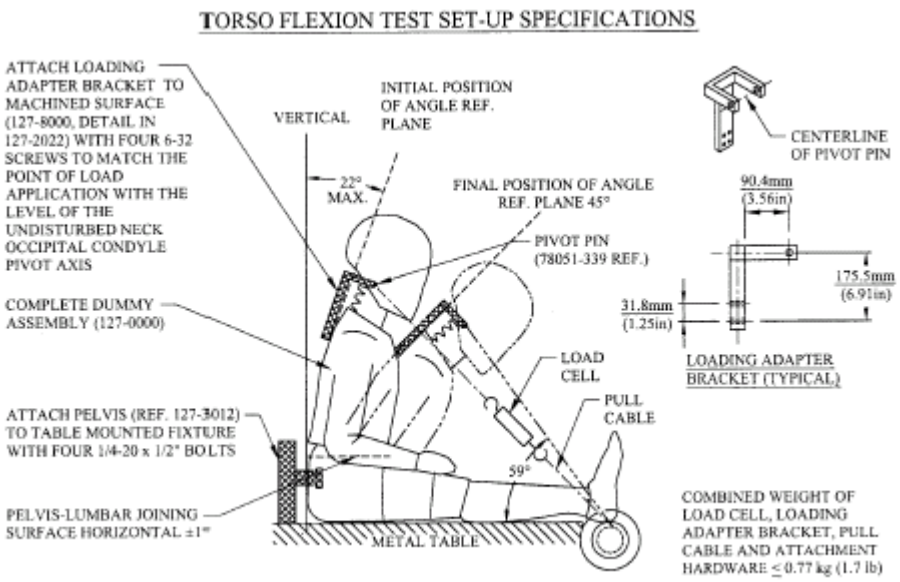
TORSO FLEXION TEST SET-UP SPECIFICATIONS
ATTACH LOADING ADAPTER BRACKET TO MACHINED SURFACE (127-8000, DETAIL IN 127-2022) WITH FOUR 6-32 SCREWS TO MATCH THE POINT OF LOAD APPLICATION WITH THE LEVEL OF THE UNDISTURBED NECK OCCIPITAL CONDYLE PIVOT AXIS
VERTICAL
INITIAL POSITION OF ANGLE REF. PLANE
22° MAX.
FINAL POSITION OF ANGLE REF. PLANE 45°
PIVOT PIN (78051-339 REF.)
COMPLETE DUMMY ASSEMBLY (127-0000)
LOAD CELL
PULL CABLE
ATTACH PELVIS (REF. 127-3012) TO TABLE MOUNTED FIXTURE WITH FOUR 1/4-20 x 1/2" BOLTS
59°
PELVIS-LUMBAR JOINING SURFACE HORIZONTAL ±1°
METAL TABLE
CENTERLINE OF PIVOT PIN
90.4mm (3.56in)
175.5mm (6.91in)
31.8mm (1.25in)
LOADING ADAPTER BRACKET (TYPICAL)
COMBINED WEIGHT OF LOAD CELL, LOADING ADAPTER BRACKET, PULL CABLE AND ATTACHMENT HARDWARE ≤ 0.77 kg (1.7 lb)

FIGURE 11C

DATA SHEET C8
LEFT KNEE IMPACT TEST (572.126) (6-YEAR-OLD)

Dummy Serial Number _____ Test Date _____

Technician _____

__Pretest calibration
__Post test calibration verification

Test attempt no. ____ (when successive knee impact tests are necessary)

__1. It has been at least 30 minutes since the last knee impact test. (572.127(o))
__ N/A, ONLY one knee impact test performed
__2. The test fixture conforms to the specifications in Figure 12C.
__3. The knee assembly consisting of the knee machined (127-4013), knee flesh (127-4011), lower leg (127-4014), foot assembly (127-4030-1), and femur load transducer (SA572-S10) (may use the load cell structural replacement (127-4007)) were used. (572.126(b))
__4. The knee assembly soaked at a temperature between 18.9^{o}C (66ºF) and 25.6^{o}C (78ºF) and at a relative humidity from 10% to 70% for a period of at least four (4) hours prior to this test. (572.126(c)(1))
Record the maximum temperature _____
Record the minimum temperature _____
Record the maximum humidity _____
Record the minimum humidity _____
__5. Mount the test specimen and secure it to the rigid test fixture. (572.126(c)(2))
__6. No parts of the foot or tibia contact any exterior surface. (572.126(c)(2))
__7. Align the test probe so that throughout its stroke and at contact with the knee it is within 2 degrees of horizontal and collinear with the longitudinal centerline of the femur. (572.126(c)(3))
__8. The probe is guided so there is no significant lateral, vertical or rotational movement during the impact with the knee. (572.136(c)(4))
__9. The data acquisition system, including transducers, must conform to the requirements of SAE Recommended Practice J211/1 MAR95 (572.136(m)) Class 600.
__10. Contact the knee with the test probe at a speed between 2.07 m/s and 2.13 m/s. (572.126(c)(5)) Neither the suspension hardware, suspension cables, nor other attachments to the probe, including the velocity vane, make contact with the dummy. (572.126(c)(6)

__11. Complete the following table:

Knee Impact Results (572.126(b)(1) and 572.126(c)(5))

Parameter	Specification	Result
Probe speed	2.07 m/s ≤ speed ≤ 2.13 m/s	
Peak resistance force*	2000 N ≤ force ≤ 3000 N	

*Force = impactor mass x deceleration (572.126(b)

__12. Plots of acceleration versus time and force versus time follow this sheet.

_____ _____

Signature Date

DATA SHEET C9
RIGHT KNEE IMPACT TEST (572.126) (6-YEAR-OLD)

Dummy Serial Number _____ Test Date _____

Technician _____

__Pretest calibration
__Post test calibration verification

Test attempt no. ____ (when successive knee impact tests are necessary)

1. It has been at least 30 minutes since the last knee impact test. (572.127(o))
   __ N/A, ONLY one knee impact test performed
__2. The test fixture conforms to the specifications in Figure 12C.
__3. The knee assembly consisting of the knee machined (127-4013), knee flesh (127-4011), lower leg (127-4014), foot assembly (127-4030-2), and femur load transducer (SA572-S10) (may use the load cell structural replacement (127-4007)) were used. (572.126(b))
__4. The knee assembly soaked at a temperature between 18.9^{o}C (66ºF) and 25.6^{o}C (78ºF) and at a relative humidity from 10% to 70% for a period of at least four (4) hours prior to this test. (572.126(c)(1))
   Record the maximum temperature _____
   Record the minimum temperature _____
   Record the maximum humidity _____
   Record the minimum humidity _____
__5. Mount the test specimen and secure it to the rigid test fixture. (572.126(c)(2))
__6. No parts of the foot or tibia contact any exterior surface. (572.126(c)(2))
__7. Align the test probe so that throughout its stroke and at contact with the knee it is within 2 degrees of horizontal and collinear with the longitudinal centerline of the femur. (572.126(c)(3))
__8. The probe is guided so there is no significant lateral, vertical or rotational movement during the impact with the knee. (572.136(c)(4))
__9. The data acquisition system, including transducers, must conform to the requirements of SAE Recommended Practice J211/1 MAR95 (572.136(m)) Class 600.
__10. Contact the knee with the test probe at a speed between 2.07 m/s and 2.13 m/s. (572.126(c)(5)) Neither the suspension hardware, suspension cables, nor other attachments to the probe, including the velocity vane, make contact with the dummy. (572.126(c)(6)

__11. Complete the following table:

Knee Impact Results (572.126(b)(1) and 572.126(c)(5))

Parameter	Specification	Result
Probe speed	2.07 m/s ≤ speed ≤ 2.13 m/s	
Peak resistance force*	2000 N ≤ force ≤ 3000 N	

*Force = impactor mass x deceleration (572.126(b)

__12. Plots of acceleration versus time and force versus time follow this sheet.

_____ _____

Signature Date

KNEE IMPACT TEST SET-UP SPECIFICATIONS

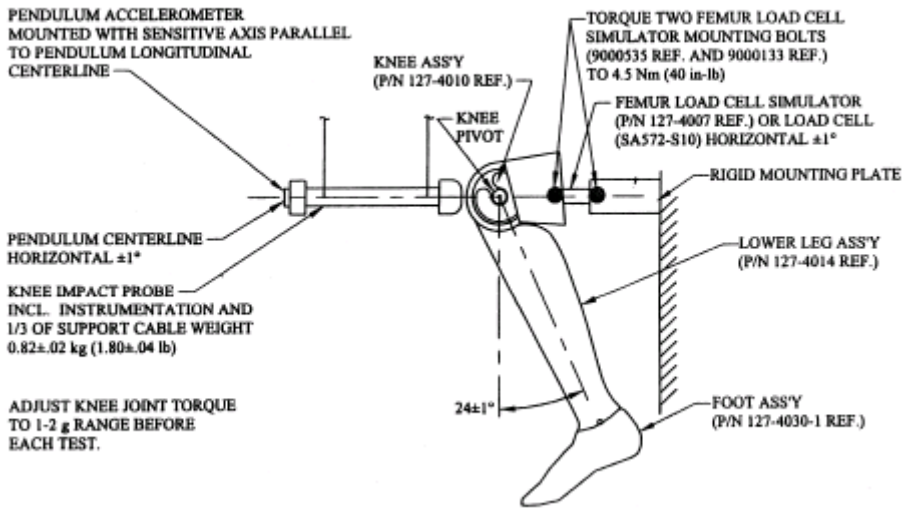

Probe specifications (572.127(b)):

1. Rigid metallic construction, concentric in shape and symmetric about is longitudinal axis.
2. A mass of 0.82 ± 0.02 kg (1.8 ± 0.05 lbs). 1/3 of the weight of the suspension cables and any attachments to the impact probe must be included in the calculation of mass, and such components may not exceed 5 percent of the total weight of the test probe.
3. Minimum mass moment of inertia of 34 kg-cm^2 (0.03 lbs-in-sec^2) in yaw and pitch about the center of gravity.
4. The impacting end of the probe is perpendicular to and concentric with the longitudinal axis. It must have a flat, continuous, and non-deformable face with diameter of 76.2 ± 0.2 mm (3.00 ± 0.01 in) and an edge radius of 7.6-12.7 mm (0.3-0.5 in).
5. The impactor is a cylinder with a diameter of 76-77 mm (3.0-3.1 in) and it is at least 12.5 mm (0.5 in) long.
6. The probe's end opposite to the impact face must have provisions for mounting of an accelerometer with its sensitive axis collinear with the longitudinal axis of the probe.
7. The impact probe shall have a free air resonant frequency of not less than 1000 Hz in the direction of the longitudinal direction of the impactor.

FIGURE 12C

DATA SHEET C10

PART 572 INSTRUMENTATION CALIBRATION INFORMATION

I.D. NO.	MANUFACTURER	MODEL NO.	SERIAL NO.	DATE OF LAST CALIBRATION	DATE OF NEXT CALIBRATION
DUMMY INSTRUMENTATION					
HEAD ACCELEROMETERS					
(1) LONGITUDINAL					
(2) LATERAL					
(3) VERTICAL					
NECK TRANSDUCER					
CHEST ACCELEROMETERS					
(1) LONGITUDINAL					
(2) LATERAL					
(3) VERTICAL					
CHEST POTENTIOMETER					
FEMUR LOAD CELLS					
(1) RIGHT FEMUR					
(2) LEFT FEMUR					
LABORATORY INSTRUMENTATION					
NECK PENDULUM ACCELEROMETER					
THORAX PENDULUM ACCELEROMETER					
KNEE PENDULUM ACCELEROMETER					
NECK ROTATION TRANSDUCER 1 (OPTIONAL)					
NECK ROTATION TRANSDUCER 2 (OPTIONAL)					

LABORATORY TECHNICIAN: _____

APPENDIX D

PART 572P (3-YEAR OLD) DUMMY PERFORMANCE CALIBRATION TEST PROCEDURE

APPENDIX D
PART 572, SUBPART P DUMMY PERFORMANCE CALIBRATION TEST PROCEDURE

1. PURPOSE AND APPLICATION 1
2. GENERAL REQUIREMENTS 1
3. SECURITY 1
4. GOOD HOUSEKEEPING 2
5. TEST SCHEDULING AND MONITORING 2
6. TEST DATA DISPOSITION 2
7. GOVERNMENT FURNISHED PROPERTY (GFP) 2
8. CALIBRATION AND TEST INSTRUMENTATION 5
9. PHOTOGRAPHIC DOCUMENTATION 6
10. DEFINITIONS 6
11. PRETEST REQUIREMENTS 6
    11.1 TRANSDUCER REQUIREMENTS 6
    11.2 OTHER TRANSDUCER CONDITIONS 7
    11.3 THORAX IMPACTOR PROBE (572.146(a)) 8
    SIGN CONVENTION FOR PART 572 TEST DUMMIES 9
    11.4 GENERAL TEST CONDITIONS 11
12. CALIBRATION TEST EXECUTION 11
13. POST TEST REQUIREMENTS 11
    14.1 APPARENT NONCONFORMANCE 11
    14.2 FINAL PERFORMANCE CALIBRATION REPORTS 12
15. DATA SHEETS 13
    DATA SHEET D1 13
    DATA SHEET D2 15
    DATA SHEET D3 21
    DATA SHEET D4 24
    DATA SHEET D5 26
    DATA SHEET D6 31
    DATA SHEET D7 36
    DATA SHEET D8 39

1. PURPOSE AND APPLICATION

The purpose of this laboratory procedure is to provide dummy users (independent testing laboratories under contract with the Office of Crashworthiness Standards) with standard test procedures for performing receiving-inspection and performance calibration tests on the Part 572, Subpart P dummy so that repetitive and correlative test results can be obtained. The following tests have been developed to establish a uniform calibration procedure for all users as the means of verifying the performance of the dummy.

A. EXTERNAL DIMENSIONS (PADI)

B. HEAD DROP TEST (572.142)

C. NECK FLEXION TEST (572.143(b)(1))

D. NECK EXTENSION TEST 572.143(b)(2)

E. THORAX IMPACT TEST ((572.144)

F. TORSO FLEXION (572.145)

National Highway Traffic Safety Administration (NHTSA) contract laboratories performing NCAP testing for the Office of Crashworthiness Standards (OCWS) must use this laboratory procedure for the calibration of Part 572, Subpart P dummies.

2. GENERAL REQUIREMENTS

The Code of Federal Regulations (49CFR), Parts 571 and 572, was amended to adopt the Hybrid III, 3-Year-Old Child Dummy as the means of determining a vehicle's conformance to the performance requirements of NCAP. Each Part 572, Subpart P dummy used in an NCAP test must meet the specifications and performance criteria of Part 572 before and after each vehicle crash test in order to be an acceptable NCAP test tool.

The Part 572, Subpart P Hybrid III, 3-Year-Old Child Dummy consists of components and assemblies specified in the drawing and specifications package which is available from Reprographics Technologies, 9000 Virginia Manor, Beltsville, MD 20705, telephone - (301) 419-5070.

3. SECURITY

All NHTSA Part 572, Subpart P test dummies delivered to the contract laboratory as Government Furnished Property (GFP) will be stored in a safe and secure area such as a dummy calibration laboratory. The contractor is financially responsible for any acts of theft and/or vandalism that occur during the storage of GFP. Any security problems shall be reported by telephone to the Industrial Property Manager (IPM), Office of Contracts and Procurement, within two working days after the incident. A letter containing specific details of the security problem will be sent to the IPM (with copy to the COTR) within 48 hours.

The contractor is responsible for maintaining the NHTSA test dummies in good working order, and shall protect and segregate the data that evolves from conducting Part 572, Subpart P dummy calibration tests before and after each vehicle crash test.

No Information concerning the Part 572, Subpart P dummy calibration data shall be released to anyone except the COTR, unless specifically authorized by the COTR or the COTR's Branch or Division Chief.

NOTE: No individuals, other than contractor personnel directly involved in the dummy calibration test program, shall be allowed to witness dummy calibration tests unless specifically authorized by the COTR.

4. GOOD HOUSEKEEPING

Contractors shall maintain the entire dummy calibration laboratory, test fixtures, and instrumentation in a neat, clean, and painted condition with test instruments arranged in an orderly manner consistent with good test laboratory housekeeping practices.

5. TEST SCHEDULING AND MONITORING

The Part 572, Subpart P dummies are being calibrated as test tools to be used in NCAP vehicle crash tests. The schedule for these performance calibration tests must be correlated with that of the vehicle tests. All testing shall be coordinated to allow monitoring by the COTR.

6. TEST DATA DISPOSITION

The contractor shall make all dummy calibration data available to the COTR for review and analysis as required. All calibration test data for each particular Part 572, Subpart P dummy will be sent to the COTR with each test report.

All backup data sheets, strip charts, recordings, plots, technicians' notes, etc. shall be either sent to the COTR or destroyed at the conclusion of each delivery order, purchase order, etc.

7. GOVERNMENT FURNISHED PROPERTY (GFP)

Part 572, Subpart P test dummies will be furnished to the contract laboratory by the OCWS. The dummies shall be stored in a hanging position using the bracket and positioning shown in the following drawings.

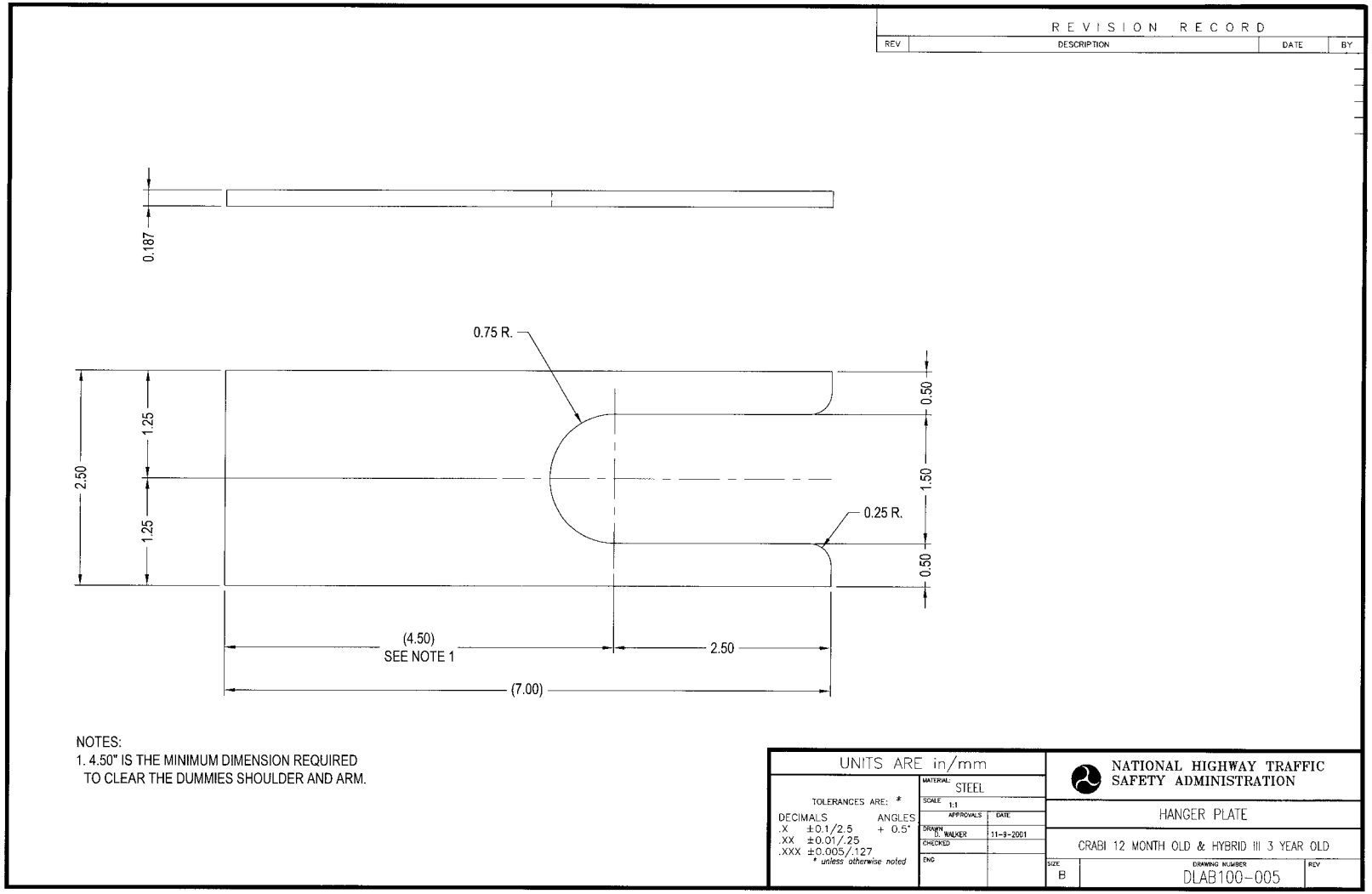
REVISION RECORD
REV
DESCRIPTION
DATE
BY
0.187
0.75 R.
0.25 R.
2.50
1.25
1.25
0.50
1.50
0.50
(4.50)
SEE NOTE 1
2.50
(7.00)
NOTES:
1. 4.50" IS THE MINIMUM DIMENSION REQUIRED
TO CLEAR THE DUMMIES SHOULDER AND ARM.
UNITS ARE in/mm
TOLERANCES ARE: *
DECIMALS
.X ±0.1/2.5
.XX ±0.01/.25
.XXX ±0.005/.127
ANGLES
± 0.5°
* unless otherwise noted
MATERIAL: STEEL
SCALE 1:1
APPROVALS
DATE
DRAWN D. WALKER
11-9-2001
CHECKED
ENG
NATIONAL HIGHWAY TRAFFIC
SAFETY ADMINISTRATION
HANGER PLATE
CRABI 12 MONTH OLD & HYBRID III 3 YEAR OLD
SIZE B
DRAWING NUMBER
DLAB100-005
REV

FIGURE 1D

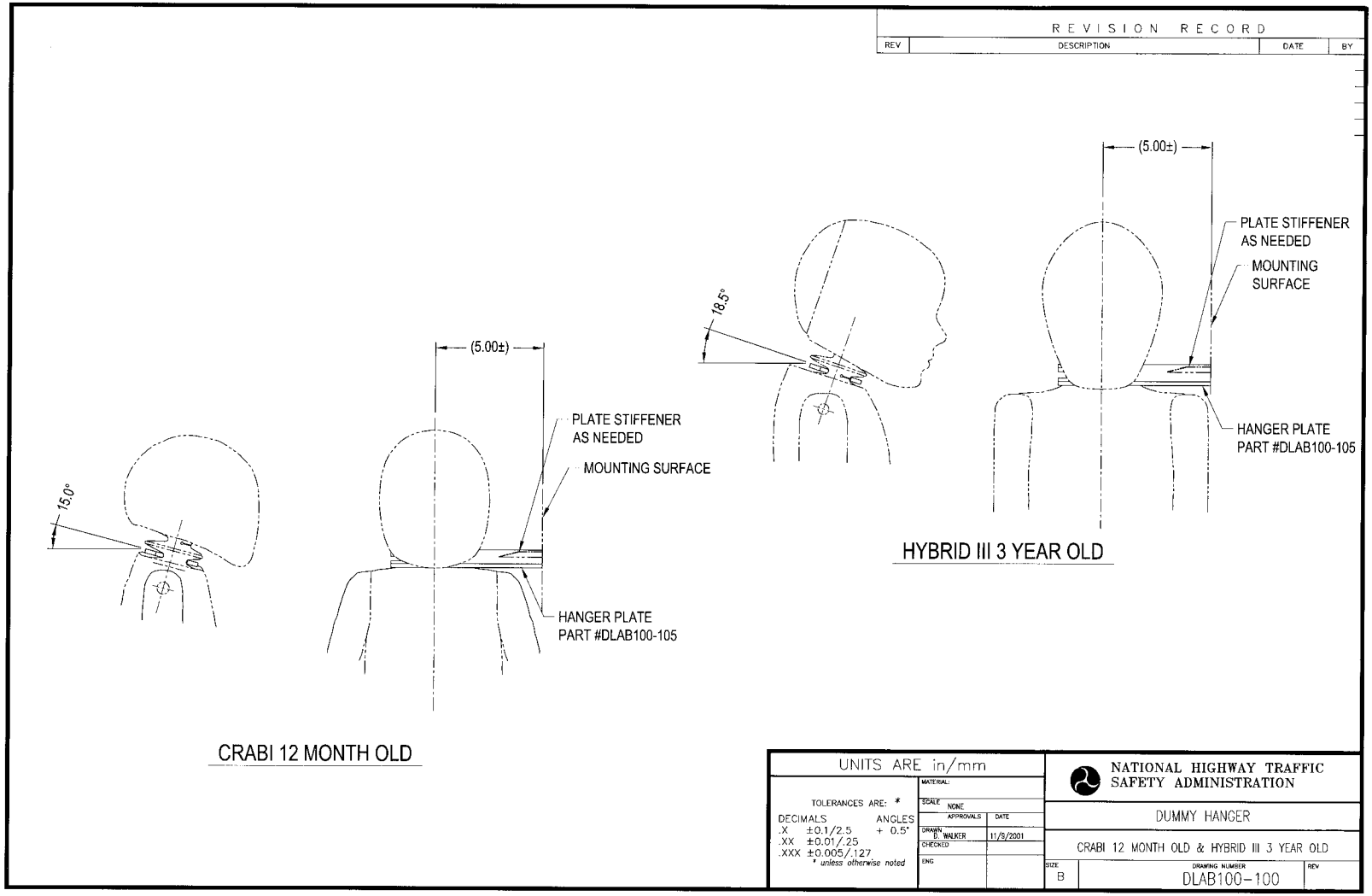
REVISION RECORD
REV
DESCRIPTION
DATE
BY
(5.00±)
PLATE STIFFENER AS NEEDED
MOUNTING SURFACE
HANGER PLATE PART #DLAB100-105
18.5°
HYBRID III 3 YEAR OLD
15.0°
CRABI 12 MONTH OLD
UNITS ARE in/mm
TOLERANCES ARE: *
DECIMALS
.X ±0.1/2.5
.XX ±0.01/.25
.XXX ±0.005/.127
ANGLES
± 0.5°
* unless otherwise noted
MATERIAL:
SCALE NONE
APPROVALS
DATE
DRAWN D. WALKER
11/9/2001
CHECKED
ENG
NATIONAL HIGHWAY TRAFFIC SAFETY ADMINISTRATION
DUMMY HANGER
CRABI 12 MONTH OLD & HYBRID III 3 YEAR OLD
SIZE B
DRAWING NUMBER DLAB100-100
REV

FIGURE 2D

These dummies shall be stored in a secured room that is kept between 55ºF and 85ºF. The contractor will check dummy components for damage after each NCAP test and complete a dummy damage checklist that will be included with the final test report. The contractor will check dummy components for damage after each crash test and complete a dummy damage checklist (as part of the NCAP procedure), which will be included with the dummy calibration, if requested. The COTR will be kept informed of the dummies' condition so that replacement parts can be provided. The dummies will be calibrated by the contractor according to the schedule indicated in the NCAP test procedure.

8. CALIBRATION AND TEST INSTRUMENTATION

Before the contractor initiates the dummy performance calibration test program, a test instrumentation calibration system must be implemented and maintained in accordance with established calibration practices. The calibration system shall be set up and maintained as follows:

A. Standards for calibrating the measuring and test equipment shall be stored and used under appropriate environmental conditions to assure their accuracy and stability.

B. All measuring instruments and standards shall be calibrated by the contractor, or a commercial facility, against a higher order standard at periodic intervals not exceeding 12 months for instruments and 12 months for calibration standards. Records, showing the calibration traceability to the National Institute of Standards and Technology (NIST), shall be maintained for all measuring and test equipment.

C. All measuring and test equipment and measuring standards shall be labeled with the following information:

1. Date of calibration

2. Date of next scheduled calibration

3. Name of the technician who calibrated the equipment

D. The contractor shall provide a written calibration procedure that includes, as a minimum, the following information for all measurement and test equipment:

1. Type of equipment, manufacturer, model number, etc.

2. Measurement range

3. Accuracy

4. Calibration interval

5. Type of standard used to calibrate the equipment (calibration traceability of the standard must be evident)

6. The actual procedures and forms used to perform calibrations.

E. The contractor shall keep records of calibrations for all test instrumentation in a manner that assures the maintenance of established calibration schedules. All such records shall be readily available for inspection when requested by the COTR. The calibration system will need the written acceptance of the COTR before testing begins.

F. Test equipment shall receive a calibration check immediately prior to and after each test. This check shall be recorded by the test technician(s) and submitted with the final report.

G. Anthropomorphic test devices shall be calibrated as indicated in NCAP test procedure. These calibrations shall be submitted with the final report.

9. PHOTOGRAPHIC DOCUMENTATION

Provide still photographs (color prints properly focused for clear images, no more than two (2) per 8.5”x11” sheet) of post test damage resulting from the vehicle crash test.

10. DEFINITIONS

PADI: Procedures for Assembly, Disassembly, and Inspection

11. PRETEST REQUIREMENTS

11.1 TRANSDUCER REQUIREMENTS

The contractor shall provide and install the following instrumentation to the GFP dummies (excluding the chest deflection transducer).

A. HEAD – The head accelerometers shall have dimensions, response characteristics and sensitive mass locations specified in drawing SA572-S4 and be mounted in the head as shown in drawing 210-0000. (572.146(b))

Three accelerometers shall be mounted in the head cavity to measure orthogonal accelerations (Ax, Ay, Az) at the center of gravity (CG) of the head assembly.

B. NECK – The upper neck force transducer shall have the dimensions, response characteristics, and sensitive axis locations specified in drawing SA572-S19 and shall be mounted at the upper neck transducer location as shown in drawing 210-0000. (572.146(c))

C. CHEST – The chest accelerometers shall have the dimensions, response characteristics, and sensitive mass locations specified in drawing SA572-S4 and be mounted in the torso assembly in triaxial configuration at the T4 location as shown drawing 210-0000. The chest accelerometers are not required for dummy calibration testing but are required for NCAP testing. (572.146(e))

The chest deflection potentiometer shall have the dimensions and response characteristics specified in drawing SA572-S50 and be mounted in the torso assembly as shown in drawing 210-0000. (572.146(f))

D. TEST FIXTURE – The neck pendulum, thorax and knee probe accelerometers shall have the dimensions and characteristics of drawing SA572-S4.

11.2 OTHER TRANSDUCER CONDITIONS

A. TRANSDUCER MOUNTS – The mountings for sensing devices shall have no resonance frequency less than 3 times the frequency range of the applicable channel class. (572.146(n))

B. TRANSDUCER SIGN CONVENTION - The sign convention for outputs of transducers mounted within the dummy that measure head and chest accelerations, chest deflection and neck loads are located in Figure 3D. For other transducers see SAE J1733DEC94. (572.146(m))

C. TRANSDUCER OUTPUT FILTERING - The outputs of acceleration and force-sensing devices installed in the dummy and in the test apparatus specified by this part are recorded with individual data channels. Each data channel will be comprised of a sensor, signal conditioner, data acquisition device, and all interconnecting cables, and must conform to the requirements of SAE Recommended Practice J211/1 MAR95, "Instrumentation for Impact Test," with channel classes as follows: (572.146(l))

1. Head acceleration	Class 1000	(572.146(l)(1))
2. Neck force	Class 1000	(572.146(l)(2)(i))
3. Neck pendulum acceleration	Class 180	(572.146(l)(2)(iii))
4. Neck moment	Class 600	(572.146(l)(2)(ii))
5. Neck potentiometer	Class 60	(572.146(l)(2)(iv))
6. Thorax spine acceleration	Class 180	(572.146(l)(3)(ii))
7. Thorax pendulum acceleration	Class 180	(572.146(l)(3)(ii))
8. Sternum deflection	Class 600	(572.146(l)(3)(iii))
9. Lumbar torso flexion	Class 60	(572.146(l)(4)(iii))

All filter classes should be of the "phaseless" type to be compatible with the "time" dependent test parameters.

11.3 THORAX IMPACTOR PROBE (572.146(a))

A. The test probe for thoracic impacts shall be of rigid metallic construction, concentric in shape and symmetric about is longitudinal axis.

B. It shall have a mass of 1.70 ± 0.01 kg (3.75 ± 0.02 lbs). 1/3 of the weight of the suspension cables and their attachments to the impact probe must be included in the calculation of mass, and such components may not exceed 5 percent of the total weight of the test probe.

C. It shall have a minimum mass moment of inertia of 283 kg-cm^2 (0.25 lbs-in-sec^2) in yaw and pitch about the center of gravity.

D. The impacting end of the probe is perpendicular to and concentric with the longitudinal axis. It must have a flat, continuous, and non-deformable face with a diameter of 50.8 ± 0.2 mm (2.00 ± 0.01 in) and a maximum edge radius of 12.7 mm (0.5 in).

E. The impactor is a cylinder with a diameter of 53.3 mm (2.1 in) and it is at least 25.4 mm (1.0 in) long.

F. The probe's end opposite to the impact face must have provisions for mounting of an accelerometer with its sensitive axis collinear with the longitudinal axis of the probe.

G. The impact probe shall have a free air resonant frequency of not less than 1000 Hz in the direction of the longitudinal direction of the impactor.

SIGN CONVENTION FOR PART 572 TEST DUMMIES

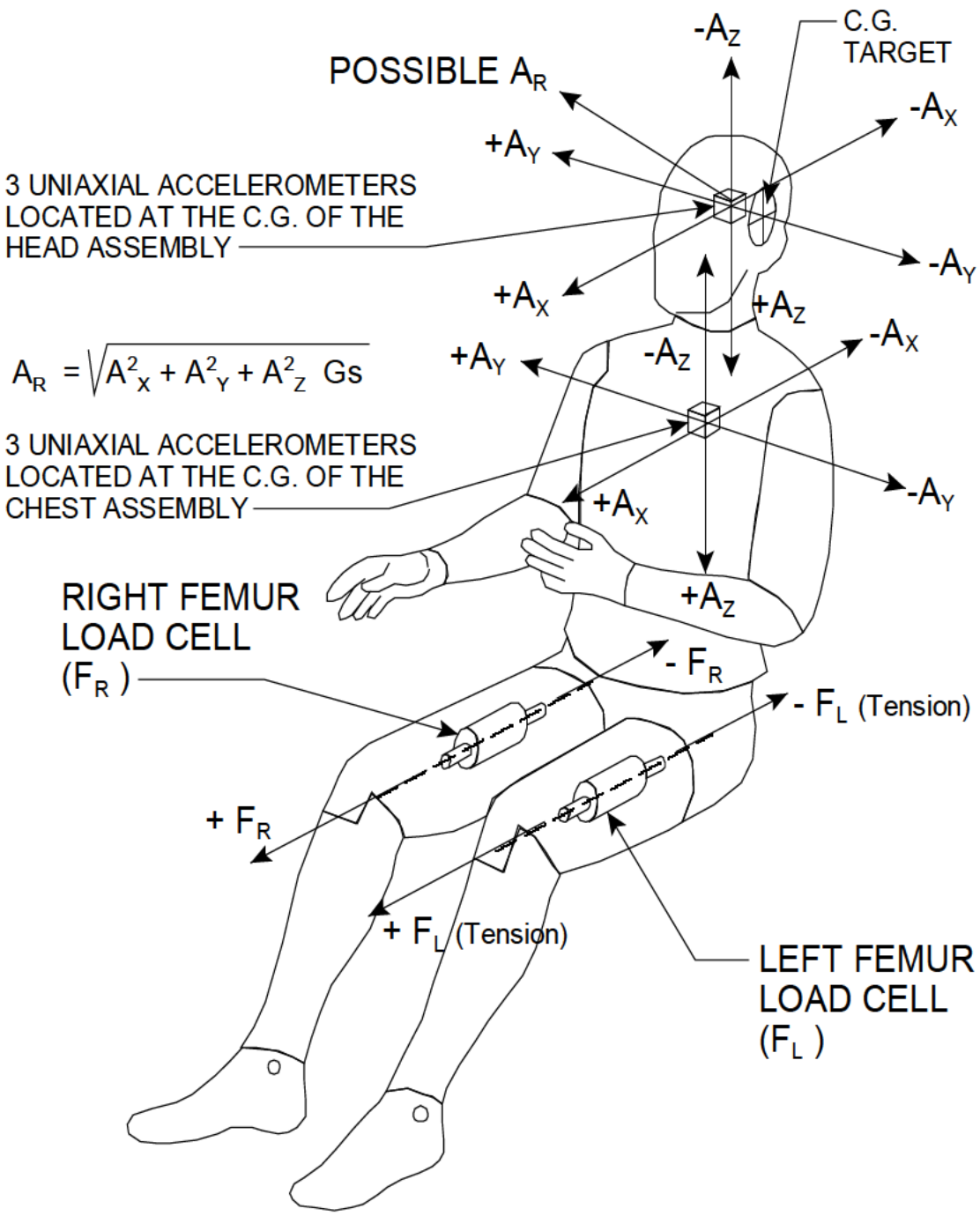

FIGURE 3D

TABLE 1D

SIGN CONVENTION FOR HYBRID III TRANSDUCER OUTPUTS	
BODY SEGMENT — MEASURED FORCE	**POSITIVE OUTPUT DIRECTION**
NECK FX SHEAR FY SHEAR FZ AXIAL MX MOMENT (ROLL) MY MOMENT (PITCH) MZ MOMENT (YAW)	 HEAD REARWARD OR CHEST FORWARD HEAD LEFTWARD, CHEST RIGHTWARD HEAD UPWARD, CHEST DOWNWARD LEFT EAR TOWARD LEFT SHOULDER CHIN TOWARD STERNUM CHIN TOWARD LEFT SHOULDER
FEMUR FX SHEAR FY SHEAR FZ AXIAL MX MOMENT (ROLL) MY MOMENT (PITCH) MZ MOMENT (YAW)	KNEE UPWARD, UPPER FEMUR DOWNWARD KNEE RIGHTWARD, UPPER FEMUR LEFTWARD KNEE FORWARD (TENSION), PELVIS REARWARD KNEE LEFTWARD, HOLD UPPER FEMUR IN PLACE KNEE UPWARD, HOLD UPPER FEMUR IN PLACE KNEE ROTATED CCW WHEN FACING FRONT OF DUMMY
KNEE CLEVIS - FZ AXIAL	TIBIA DOWNWARD (TENSION), FEMUR UPWARD
UPPER TIBIA MX MOMENT MY MOMENT	ANKLE LEFTWARD, HOLD KNEE IN PLACE ANKLE FORWARD, BOTTOM OF KNEE CLEVIS REARWARD
LOWER TIBIA FX SHEAR FY SHEAR FZ AXIAL MX MOMENT MY MOMENT	ANKLE FORWARD, KNEE REARWARD ANKLE RIGHTWARD, KNEE LEFTWARD ANKLE DOWNWARD (TENSION), KNEE UPWARD ANKLE LEFTWARD, HOLD KNEE IN PLACE ANKLE FORWARD, BOTTOM OF KNEE CLEVIS REARWARD
CHEST DISPLACEMENT	CHEST COMPRESSED - NEGATIVE
KNEE SHEAR DISPLACEMENT	PUSH ON FRONT OF TIBIA - NEGATIVE

NOTE: DIRECTIONS ARE DEFINED IN RELATION TO A SEATED DUMMY

11.4 GENERAL TEST CONDITIONS

A. Surfaces of dummy components are not painted unless otherwise specified. (572.146(q))

B. Dummy performance tests of the same component, segment, assembly, or fully assembled dummy are separated in time by a period of not less than 30 minutes unless otherwise specified. (572.146(p))

C. Except for neck assembly and thorax assembly testing, the dummy performance tests are conducted at any temperature from 18.9°C (66ºF) to 25.6°C (78ºF) and at any relative humidity from 10% to 70% after exposure of the dummy to these conditions for a period of not less than 4 hours. For the neck assembly and thorax assembly, the temperature range is 20.6°C (69ºF) to 22.2°C (72ºF).

D. Dummy limb joints are set at 1 G, barely restraining the weight of the limb when it is extended horizontally. The force required to move a limb segment does not exceed 2 Gs throughout the range of limb motion. (572.146(o))

E. Dummies will be clothed for the thorax calibration tests with a form fitting cotton-polyester-based tight-fitting long-sleeved shirt and ankle length pants. The total weight of the shirt and pants shall not exceed 0.25 kg (0.55 lb). (572.144(c)(1))

12. CALIBRATION TEST EXECUTION

Complete the Data Sheets in section 15.

13. POST TEST REQUIREMENTS

The contractor shall verify all instrumentation and check data sheets and photographs. Make sure data is recorded in all data blocks on every performance calibration test data sheet.

14. REPORTS

14.1 APPARENT NONCONFORMANCE

During calibration verification, any indication of apparent nonconformance to the requirements of Regulation P572 shall be communicated by telephone to the COTR within 24 hours with written notification mailed within 48 hours (Saturdays and Sundays excluded). Written notification shall be submitted with a copy of the particular test data sheet(s) and preliminary data plot(s).

In the event of an apparent nonconformance, a calibration check of some critically sensitive test equipment and instrumentation may be required for verification of accuracy.

The necessity for the calibration shall be at the COTR's discretion and shall be performed without additional costs to the OCWS.

14.2 FINAL PERFORMANCE CALIBRATION REPORTS

14.2.1 COPIES

Copies of the data sheets containing the calibration verification data for each Part 572, Subpart P dummy used in the NCAP test shall be submitted with the final test report for the vehicle.

Contractors are required to PROOF READ all Final Test Reports before submittal to the COTR. The OCWS will not act as a report quality control office for contractors. Reports containing a significant number of errors will be returned to the contractor for correction, and a "hold" will be placed on invoice payment for the particular test.

15. DATA SHEETS

DATA SHEET D1

DUMMY DAMAGE CHECKLIST (3 YEAR-OLD)

Dummy Serial Number _____ Test Date _____

Technician _____

This check sheet is completed as part of the calibration verification.

__Perform general cleaning.

Dummy Item	***Inspect for***	***Comments***	***Damaged***	***OK***
Outer skin	Gashes, rips, cracks			
Head	Ballast secure			
	General appearance			
Neck	Broken or cracked rubber			
	Upper neck bracket firmly attached to the lower neck bracket			
	Looseness at the condyle joint			
	Nodding blocks cracked or out of position			
Spine	Broken or cracks in rubber.			
Ribs	Broken or bent ribs			
	Broken or bent rib supports			
	Damping material separated or cracked			
	Rubber bumpers in place			
Chest Displacement Assembly	Bent shaft			
	Slider arm riding in track			
Transducer leads	Torn cables			

Dummy Item	***Inspect for***	***Comments***	***Damaged***	***OK***
Accelerometer Mountings	Head mounting secure			
	Chest mounting secure			
Knees	Skin condition			
	Insert (do not remove)			
	Casting			
Limbs	Normal movement and adjustment			
Knee Sliders	Wires intact			
	Rubber returned to “at rest” position			
Pelvis	Broken			
Other				

If upon visual examination, damage is apparent in any of these areas, the appropriate engineer or engineering technician is to be consulted for a decision on repair or replacement of parts.

Repair or Replacement approved by:

_____ _____

Signature Date

Describe the repair or replacement of parts:

Checked by

_____ _____

Signature Date

DATA SHEET D2
EXTERNAL MEASUREMENTS (3 YEAR-OLD)
(See the PADI)

Dummy Serial Number _____ Test Date _____

Technician _____

__Pretest calibration
__Post test calibration verification

__1. Seat the dummy on a flat, rigid, smooth, clean, dry, horizontal surface as shown in Figure 5D and 6D. The seating surface is at least 406 mm (16 in) wide and 221 mm (8 11/16 in) in depth with a vertical section at least 406 mm (16 in) wide and 610 mm (24 in) high attached to the rear of the seating fixture. The dummy's midsagittal plane is vertical and centered on the test surface.
__2. Secure the dummy to the test fixture so that the upper torso and buttocks are against the rear surface.
__3. Position the dummy's H-point so it is 39.4 ± 5.1 mm (1.55 ± 0.2 in) above the horizontal seating surface and 62.0 ± 5.1 mm) (2.44 ± 0.2 in) forward of the rear vertical surface of the fixture.
__4. Extend the dummy's neck so that the base of the skull is level both fore-and-aft and side-to-side, within 0.5 degrees. The rearmost surface of the head should be 53.3 ± 5.1 mm (2.1 ± 0.2 in) from the vertical surface of the test fixture. A strap or bungee cord may be placed around the forehead of the dummy to stabilize the head in this position.
__5. Position the upper and lower legs parallel to the midsagittal plane so the centerline between the knee pivot and the ankle pivot is parallel to the rear vertical surface of the fixture.
__6. Position the feet parallel to the dummy's midsagittal plane with the bottoms horizontal and parallel to the seating surface.
__7. Position the upper arms downward vertically so the centerline between the shoulders and elbow pivots is parallel to the rear vertical surface of the fixture.
__8. Position the lower arms horizontally so the centerline of the lower arm-hand is parallel to the seat surface.
__9. Record the dimensions listed in following table, except for dimension Q, X, Y and Z (reference figure 4D).
__10. Mark the locations AA, and BB, and record the dimensions Y, Z, as specified in the following table and figure 4D. Measure and record dimensions Q and X.

_____ _____
Signature Date

HYBRID III, PART 572, SUBPART O EXTERNAL DIMENSIONS				
DIMENSION	DESCRIPTION	DETAILS	ASSEMBLY DIMENSION (mm)	ACTUAL MEASUREMENT
A	TOTAL SITTING HEIGHT	Seat surface to highest point on top of the head.	538.5-553.7	
B	SHOULDER PIVOT HEIGHT	Centerline of shoulder pivot bolt to the seat surface.	307.4-322.6	
C	H-POINT HEIGHT	Reference	34.3-44.5	
D	H-POINT LOCATION FROM BACKLINE	Reference	56.9-67.1	
E	SHOULDER PIVOT FROM BACKLINE	Center of the shoulder pivot bolt to the fixture's rear vertical surface.	60.9-71.1	
F	THIGH CLEARANCE	Fixture's seat surface to hightest point on the upper leg segment	81.0-91.2	
G	BACK OF ELBOW TO WRIST PIVOT	Back of the elbow flesh to the finger tip, in line with the elbow and wrist centerlines	247.4-262.6	
H	HEAD BACK TO BACKLINE	Rearmost surface of the head to the fixture's rear vertical surface (Reference)	48.2-58.4	
I	SHOULDER TO- ELBOW LENGTH	Measure from the highest point on top of the shoulder to the lowest part of the flesh on the elbow in line with the shoulder and elbow pivot bolts.	185.4-200.6	
J	ELBOW REST HEIGHT	Measure from the flesh below the elbow pivot bolt to the seat surface.	133.6-148.8	
K	BUTTOCK TO KNEE LENGTH	The forward most part of the knee flesh to the fixture's rear vertical surface, in line with the knee and hip pivots.	284.8-300	
L	POPLITEAL HEIGHT	Seat surface to the horizontal plane of the bottom of the feet.	218.5-233.7	
M	KNEE PIVOT HEIGHT	Centerline of knee pivot bolt to the horizontal plane of the bottom of the feet.	241.6-256.8	
N	BUTTOCK POPLITEAL LENGTH	The most forward portion of the crevice between the upper and lower legs behind the knee to the fixture's rear verical surface.	218.0-233.2	
HYBRID III, SUBPART P EXTERNAL DIMENSIONS, continued				

DIMENSION	DESCRIPTION	DETAILS	ASSEMBLY DIMENSION (mm)	ACTUAL MEASUREMENT
O	CHEST DEPTH WITH JACKET	Measured 254.0 ± 5.1 mm above seat surface	138.5-153.7	
P	FOOT LENGTH	Tip of toe to rear of heal	137.6-147.8	
Q	STATURE	Lay the dummy out on a flat surface with the rear surfaces of the head, upper torso, buttocks and heels touching the surface and with the bottom of the feet perpendicular to that surface. Measure the distance from the bottom of the feet to the top of the head.	932.2-957.6	N/A
R	BUTTOCK TO KNEE PIVOT LENGTH	Knee pivot bolt to the fixture's rear vertical surface.	251.4-261.6	
S	HEAD BREADTH	Distance across the widest of the head at its widest point	128.3-143.5	
T	HEAD DEPTH	Distance from the forward most surface of the head to the rearmost surface of the head, in line with the midsgittal plane.	167.4-182.6	
U	HIP BREADTH	Distance across the width of the hip at the widest point of the jacket	200.7-215.9	
V	SHOULDER BREADTH	Distance between the outside edges of the shoulder flesh, in line with the shoulder pivot bolts	236.5-251.7	
W	FOOT BREADTH	The widest part of the foot	53.6-63.8	
X	HEAD CIRCUMFERENCE	At the largest location	500.4-515.6	
Y	CHEST CIRCUMFERENCE WITH JACKET	Distance around chest at reference location AA, with jacket on.	527.1-552.5	
Z	WAIST CIRCUMFERENCE	Distance around chest at reference location BB, with jacket on.	527.1-552.5	
AA	REFERENCE LOCATION FOR DIMENSION Y	Reference: 254.0 ± 5.1 MM above the seat surface	248.9-259.1	
BB	REFERENCE LOCATION FOR DIMENSION Z	Reference: 165.1 ± 5.1 MM above seat surface	160.0-170.2	

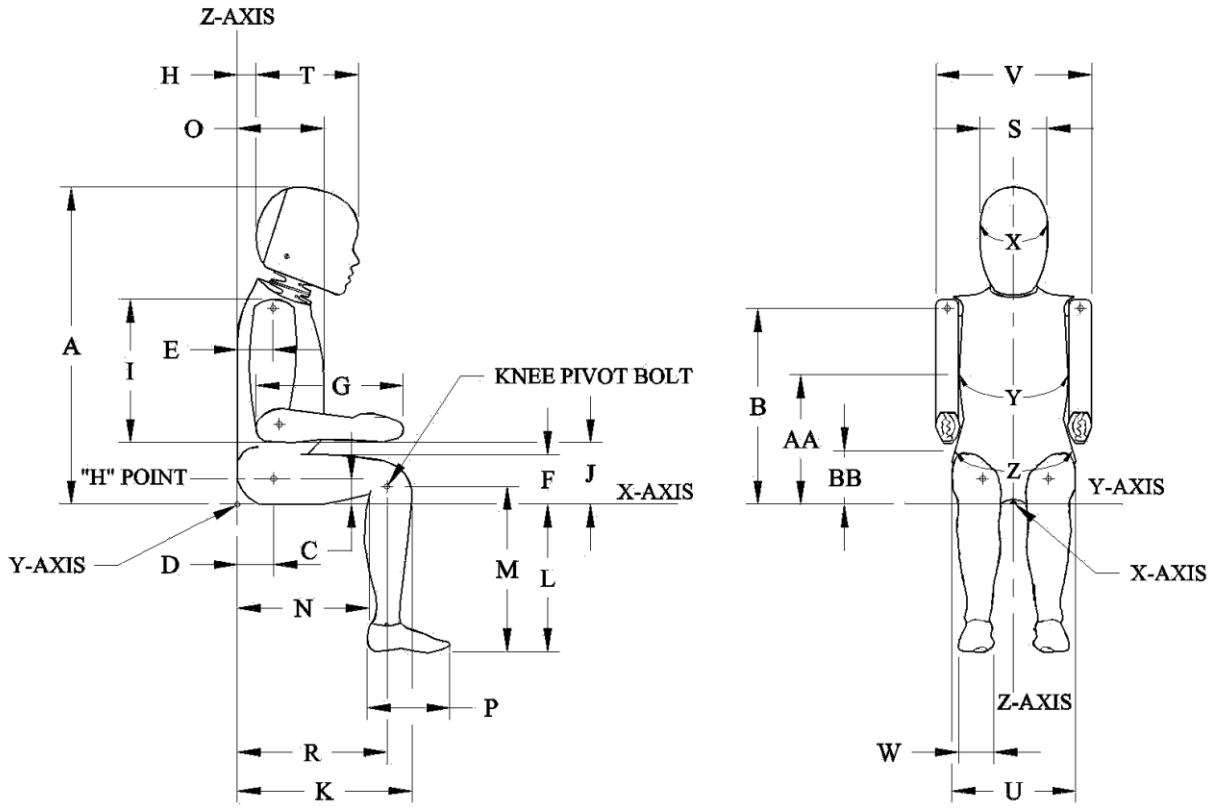

EXTERNAL DIMENSION MEASUREMENT DESIGNATIONS
FIGURE 4D

EXTERNAL DIMENSIONS TEST SETUP

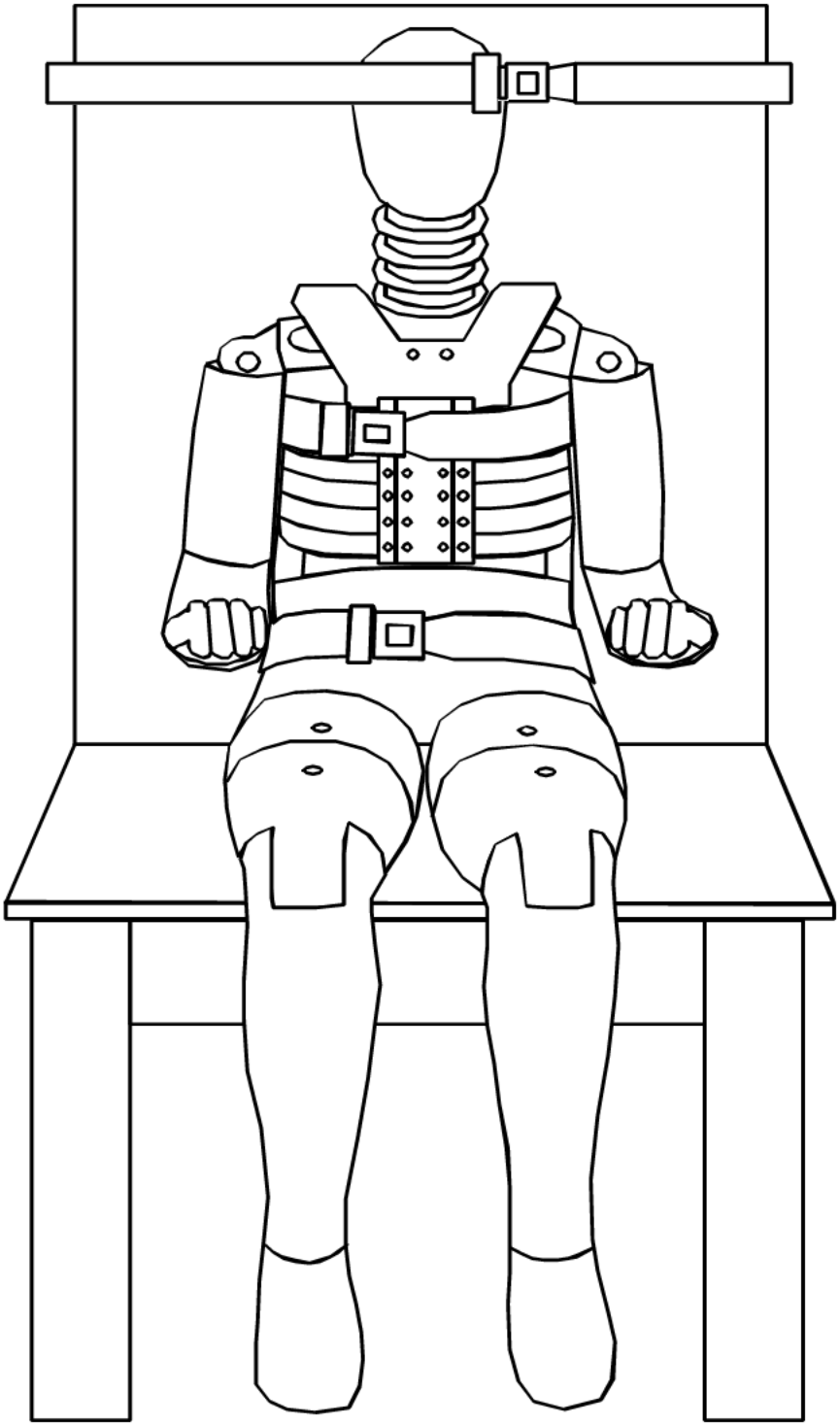

FIGURE 5B

EXTERNAL DIMENSIONS TEST SETUP

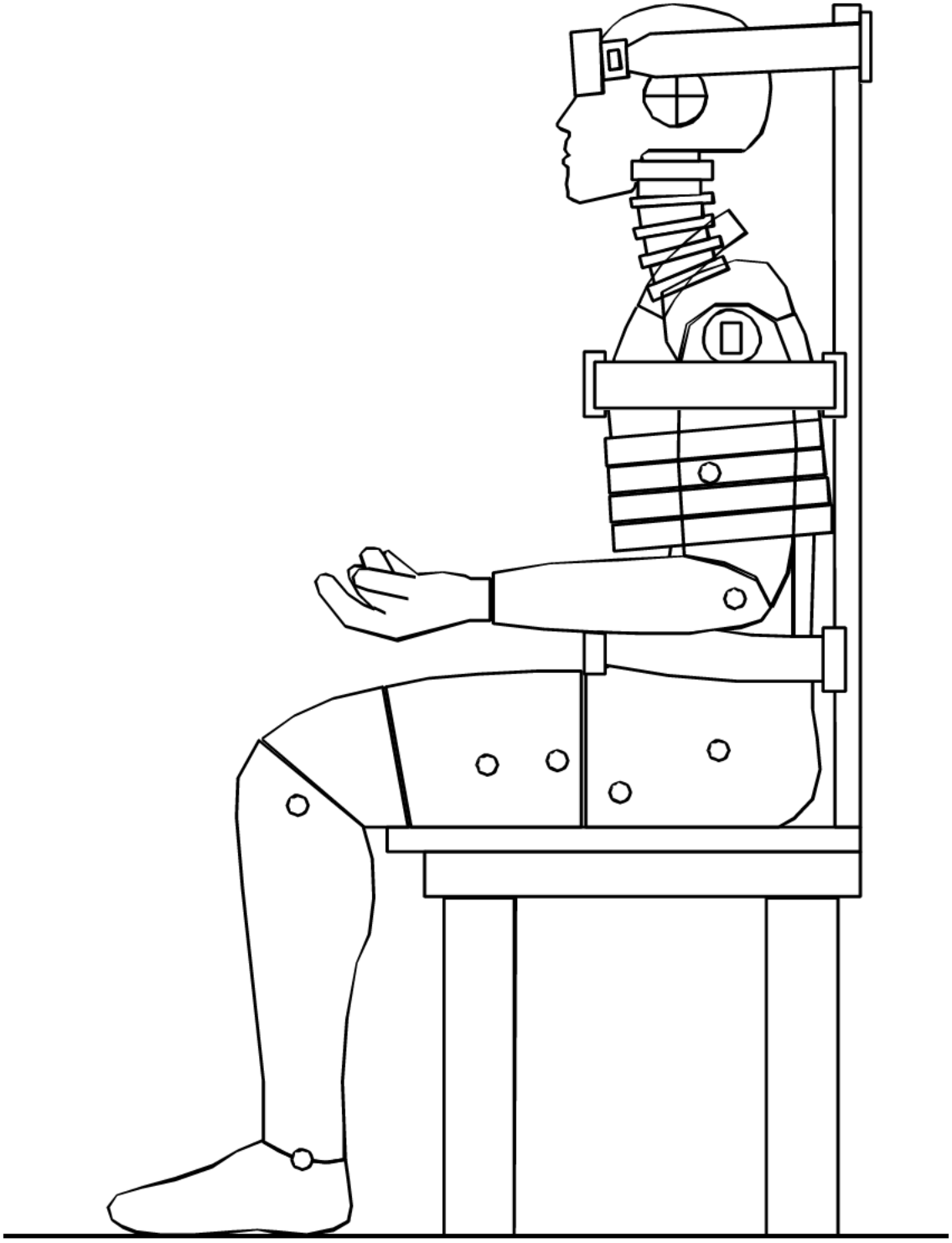

FIGURE 6D

DATA SHEET D3
HEAD DROP TEST (572.142) (3 YEAR-OLD)

Dummy Serial Number _____ Test Date _____

Technician _____

__Pretest calibration
__Post test calibration verification

Test attempt no. ____ (when successive head drops are necessary)

__1. It has been at least 2 hours since the last head drop. (572.142(c)(5))
__ N/A, ONLY one head drop performed

__2. The head assembly consists of the head (210-1000), adaptor plate (ATD 6259), accelerometer mounting block (SA572-S80) structural replacement of ½ mass of the neck load transducer (TE-107-001), head mounting washer (ATD 6262) one ½-20x1" flat head cap screw (9000150), and three (3) accelerometers (SA572-S4). (572.142(a))

__4. Accelerometers and their respective mounts are smooth and clean.

__5. The head accelerometer mounting plate screws ((10-32 x 5/8 SHCS) are torqued to 10.2 Nm.

__6. The data acquisition system, including transducers, conforms to the requirements of SAE Recommended Practice J211/1 MAR95. (572.146(l))

__7. The head assembly soaked at a temperature between 18.9°C (66ºF) and 25.6°C (78ºF) and at a relative humidity from 10% to 70% for a period of at least four (4) hours prior to a test. (572.142(c)(1))
Record the maximum temperature _____
Record the minimum temperature _____
Record the maximum humidity _____
Record the minimum humidity _____

__8. Visually inspect the head skin for cracks, cuts, abrasions, etc. Repair or replace the head skin if the damaged area is more than superficial. Note: If the damage resulted from the vehicle test in which the dummy was an occupant, the damaged area is to be documented with photography and the post test calibration verification testing completed before any replacement or repairs are made.
Record findings and actions: _____
_____
_____
_____
_____

__9. Clean the impact surface of the skin and the impact surface of the fixture with isopropyl alcohol, trichloroethane or equivalent prior to the test. (572.142(c)(2))

__10. Suspend and orient the head assembly as shown in Figure 7D. The lowest point on the forehead is 376.0 ± 1.0 mm (14.8±0.04 inch) from the impact surface. (572.142(c)(3))
Record the actual distance _____

NOTE: The masses of the suspension device and the accelerometer cables are to be kept as lightweight as possible to minimize their effect on the test results.

__11. The 3.3 mm (0.13 inch) diameter holes located on either side of the dummy's head are equidistant within 2 mm from the impact surface. (572.142(c)(3))
Record the right side distance_____
Record the left side distance _____

__12. The impact surface is clean and dry and has a microfinish in the range of 203.2×10^{-6} mm (8 micro inches) to 2032.0×10^{-6} mm (80 micro inches) (RMS). (572.142(c)(4))
Record actual microfinish _____

__14. The impact surface is a flat horizontal steel plate 50.8 mm (2 inches) thick and 610 mm (24 inches) square. (572.142(c)(4))
Record thickness _____
Record width _____
Record length _____

__15. Drop the head assembly from a height of 376.0 ± 1.0 mm (14.8 inches ± 0.04 inches) by a means that ensures a smooth, instant release onto the impact surface. (572.142(b) & (572.142(c)(4))

__16. Complete the following table. (572.142(b)):

Parameter	Specification	Result
Peak resultant acceleration	250 g ≤ x ≤ 280 g	
Resultant versus time history curve	Unimodal	
Oscillations after the main pulse	Less than 10% of the peak resultant acceleration	
Lateral acceleration	y-axis acceleration ≤ 15 g	

__17. Plots of the x, y, z, and resultant acceleration data follow this sheet.

_____ _____
Signature Date

HEAD DROP TEST SET-UP SPECIFICATIONS

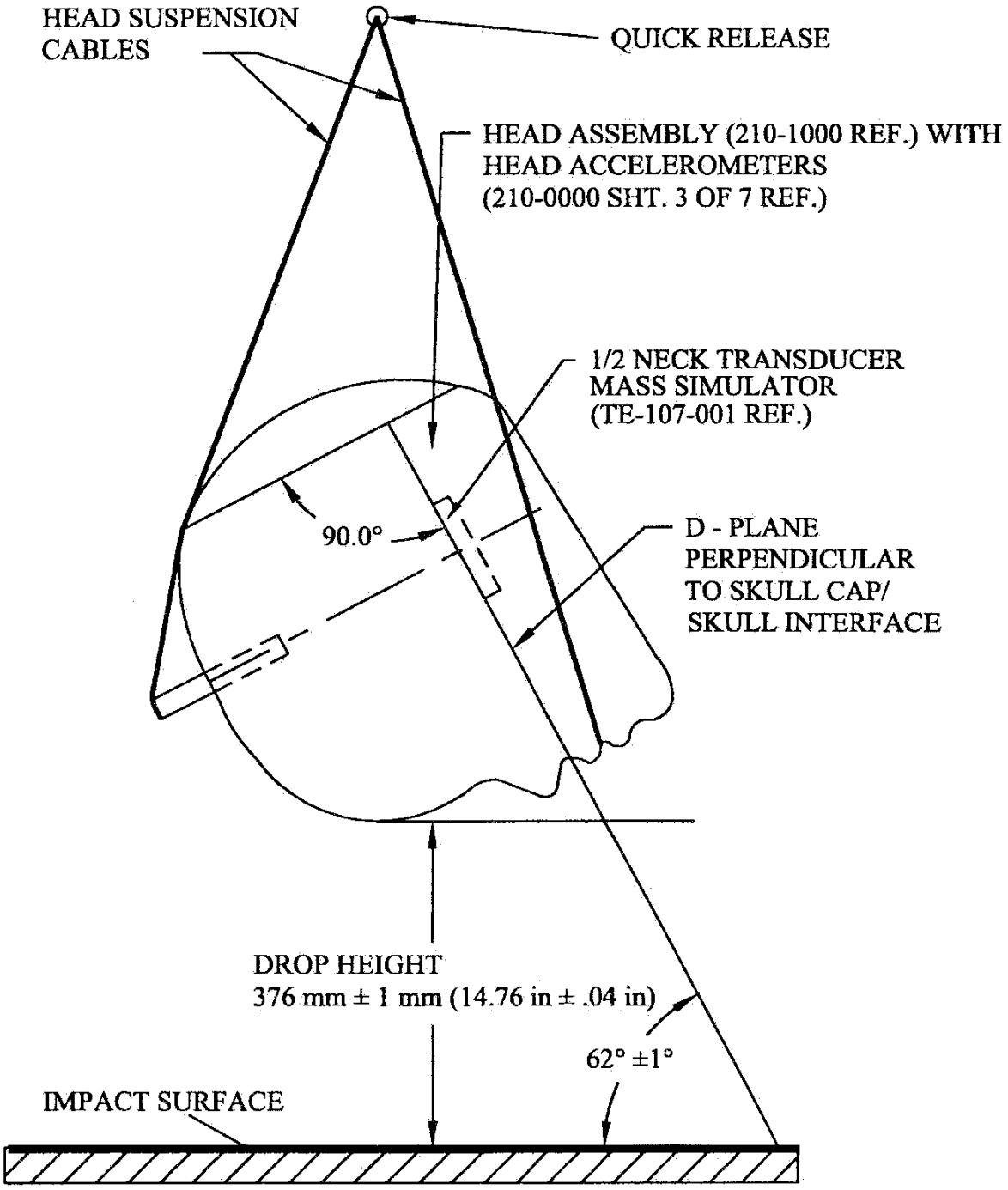

FIGURE 7D

DATA SHEET D4
NECK FLEXION TEST (572.143) (3 YEAR-OLD)

Dummy Serial Number _____ Test Date _____

Technician _____

__Pretest calibration
__Post test calibration verification

Test attempt no. ____ (when successive flexion tests are necessary)

__1. It has been at least 30 minutes since the last neck test. (572.146(p))
__ N/A, this is the first neck test performed

__2. The components required for the neck tests include the neck molding assembly (210-2015), neck cable (210-2040), nylon shoulder bushing (9001373), upper mount plate insert (910420-048), bib simulator (TE-208-050), urethane washer (210-2050), neck mounting plate (TE-250-021), two jam nuts (9001336), load moment transducer (SA572-S19) and headform (TE-208-000). (572.143(a))

__3. The assembly soaked at a temperature between 20.6^{o}C (69ºF) and 22.2^{o}C (72ºF) and at a relative humidity from 10% to 70% for a period of at least four (4) hours prior to a test. (572.143(c)(1))
Record the maximum temperature _____
Record the minimum temperature _____
Record the maximum humidity _____
Record the minimum humidity _____

__4. Visually inspect neck assembly for cracks, cuts and separation of the rubber from the metal segments. Note: If the damage resulted from the vehicle crash test, the damaged area is to be documented with photography and the post test calibration verification testing completed before any replacement or repairs are made.
Record findings and actions: _____
_____
_____
_____
_____

__6, Torque the jam nut (9001336) on the neck cable (210-2040) between 0.2 Nm and 0.3 Nm. (572.143(c)(2)

__7. The data acquisition system, including transducers, conforms to the requirements of SAE Recommended Practice J211/1 MAR95. (572.146(l))

__8. The test fixture pendulum conforms to the specifications in Figure 8D.

__9. The head-neck assembly is mounted on the pendulum so the midsagittal plane of the headform is vertical and coincides with the plane of motion of the pendulum as shown in Figure 9D for the flexion test. (572.143(c)(3))

__10. Install the transducers or other devices for measuring the "D" plane rotation with respect to the pendulum longitudinal centerline. Note: Plane "D" is the top horizontal surface of

the neck load cell. These measurement devices should be designed to minimize their influence upon the performance of the head-neck assembly.

__11. Plane D is perpendicular ± 1 degree to the centerline of the pendulum.

__12. Set the instrumentation so that the moment and rotation are defined to be zero when the longitudinal centerline of the neck and pendulum are parallel. (572.143(b)(1)(iii))

__13. Release the pendulum and allow it to fall freely from a height to achieve an impact speed of 5.4 m/s to 5.6 m/s as measured at the center of the pendulum accelerometer. (572.143(c)(4))

__14. Complete the following table:

Neck Flexion Test Results (572.143(b)(1) & (572.143(c)(4)(ii)

Parameter		Specification	Result
Pendulum impact speed		5.4 m/s ≤ speed ≤ 5.6 m/s	
Pendulum ΔV with respect to impact speed	@ 10ms	2.0 m/s ≤ ΔV ≤ 2.7 m/s	
	@ 15 ms	3.0 m/s ≤ ΔV ≤ 4.0 m/s	
	@ 20ms	4.0 m/s ≤ ΔV ≤ 5.1 m/s	
Plane D Rotation		Peak moment* 42 Nm ≤ moment ≤ 53 Nm during the following rotation range 70° ≤ angle ≤ 82°	____Nm @ ___degrees
Positive Moment Decay** (Flexion)		Time to decay to 10 Nm 60 ms ≤ time ≤ 80ms	

*The moment is a direct reading from the load cell

**Time zero is defined as the time of initial contact between the pendulum striker plate and the honeycomb material. (572.143(c)(4)(iii))

__15. Plots of pendulum acceleration, pendulum velocity, neck y-axis moment, and neck rotation about the y-axis follow this sheet.

_____ _____

Signature Date

DATA SHEET D5
NECK EXTENSION TEST (572.133) (3 YEAR-OLD)

Dummy Serial Number _____ Test Date _____

Technician _____

__Pretest calibration
__Post test calibration verification

Test attempt no. ____ (when successive extension tests are necessary)

__1. It has been at least 30 minutes since the last neck test. (572.146(p))
__ N/A, this is the first neck test performed

__2. The components required for the neck tests include the neck molding assembly (210-2015), neck cable (210-2040), nylon shoulder bushing (9001373), upper mount plate insert (910420-048), bib simulator (TE-208-050), urethane washer (210-2050), neck mounting plate (TE-250-021), two jam nuts (9001336), load moment transducer (SA572-S19) and headform (TE-208-000). (572.143(a))

__3. The assembly soaked at a temperature between 20.6^{o}C (69ºF) and 22.2^{o}C (72ºF) and at a relative humidity from 10% to 70% for a period of at least four (4) hours prior to a test. (572.143(c)(1))
Record the maximum temperature _____
Record the minimum temperature _____
Record the maximum humidity _____
Record the minimum humidity _____

__4. Visually inspect neck assembly for cracks, cuts and separation of the rubber from the metal segments. Note: If the damage resulted from the vehicle crash test, the damaged area is to be documented with photography and the post test calibration verification testing completed before any replacement or repairs are made.
Record findings and actions: _____
_____
_____
_____
_____

__6, Torque the jam nut (9001336) on the neck cable (210-2040) between 0.2 Nm and 0.3 Nm. (572.143(c)(2)

__7. The data acquisition system, including transducers, conforms to the requirements of SAE Recommended Practice J211/1 MAR95. (572.146(l))

__8. The test fixture pendulum conforms to the specifications in Figure 8D.

__9. The head-neck assembly is mounted on the pendulum so the midsagittal plane of the headform is vertical and coincides with the plane of motion of the pendulum as shown in Figure 10D for the extension test. (572.143(c)(3))

__10. Install the transducers or other devices for measuring the "D" plane rotation with respect to the pendulum longitudinal centerline. Note: Plane "D" is the top horizontal surface of

the neck load cell. These measurement devices should be designed to minimize their influence upon the performance of the head-neck assembly.

__11. Plane D is perpendicular ± 1 degree to the centerline of the pendulum.

__12. Set the instrumentation so that the moment and rotation are defined to be zero when the longitudinal centerline of the neck and pendulum are parallel. (572.143(b)(2)(iii))

__13. Release the pendulum and allow it to fall freely from a height to achieve an impact speed of 3.55 m/s to 3.75 m/s as measured at the center of the pendulum accelerometer. (572.143(c)(4))

__14. Complete the following table:

Neck Extension Test Results (572.143(b)(2) & (572.143(c)(4)(ii)

Parameter		Specification	Result
Pendulum impact speed		3.55 m/s ≤ speed ≤ 3.75 m/s	
Pendulum ΔV with respect to impact speed	@ 6 ms	1.0 m/s ≤ ΔV ≤ 1.4 m/s	
	@ 10 ms	1.9 m/s ≤ ΔV ≤ 2.5 m/s	
	@ 14 ms	2.8 m/s ≤ ΔV ≤ 3.5 m/s	
Plane D Rotation		Peak moment* -53.3 Nm ≤ moment ≤ -43.7 Nm during the following rotation range 83≤ angle ≤ 93	____Nm @ ___degrees
Negative Moment Decay** (Extension)		Time to decay to -10 Nm 60 ms ≤ time ≤ 80ms	

*The moment is a direct reading from the load cell

**Time zero is defined as the time of initial contact between the pendulum striker plate and the honeycomb material. (572.143(c)(4)(iii))

__15. Plots of pendulum acceleration, pendulum velocity, neck y-axis moment, and neck rotation about the y-axis follow this sheet.

_____ _____

Signature Date

PENDULUM SPECIFICATIONS

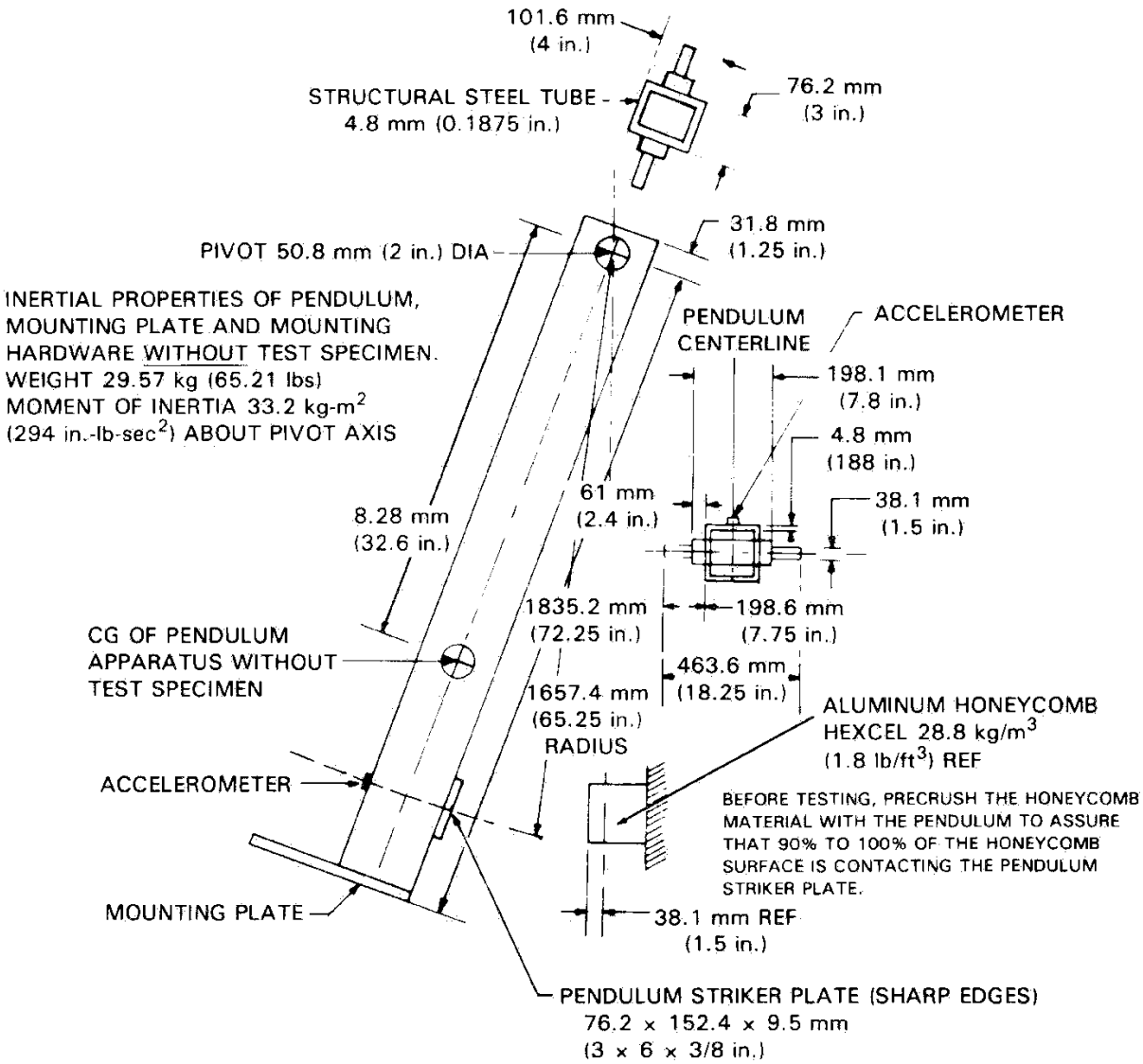

FIGURE 8D

NECK FLEXION TEST SET-UP SPECIFICATIONS

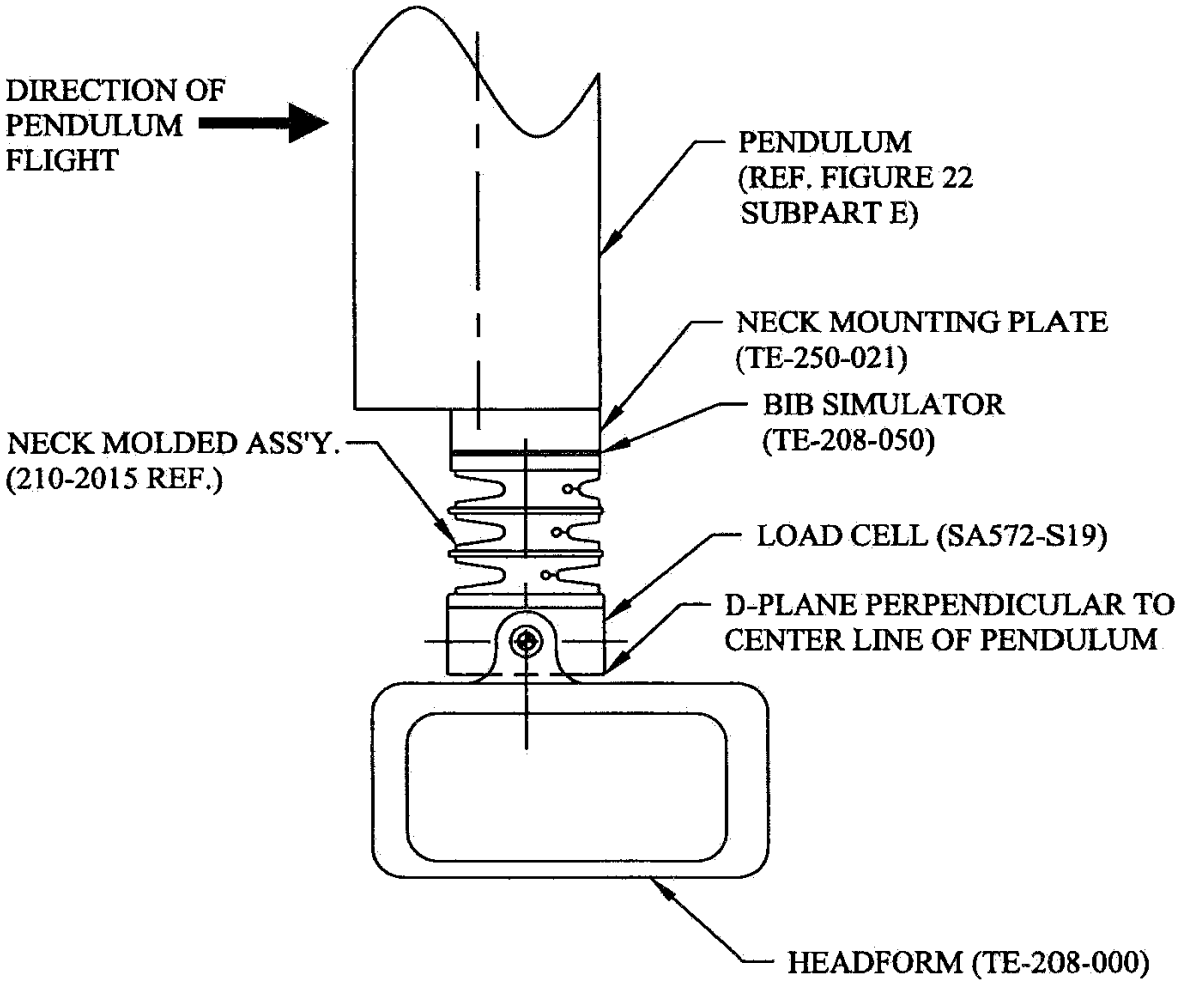

NOTE: MOUNT NECK AT LEADING EDGE OF PENDULUM TO AVOID INTERFERENCE WITH HEADFORM MOTION. PENDULUM SHOWN IN VERTICAL ORIENTATION.

FIGURE 9D

NECK EXTENSION TEST SET-UP SPECIFICATIONS

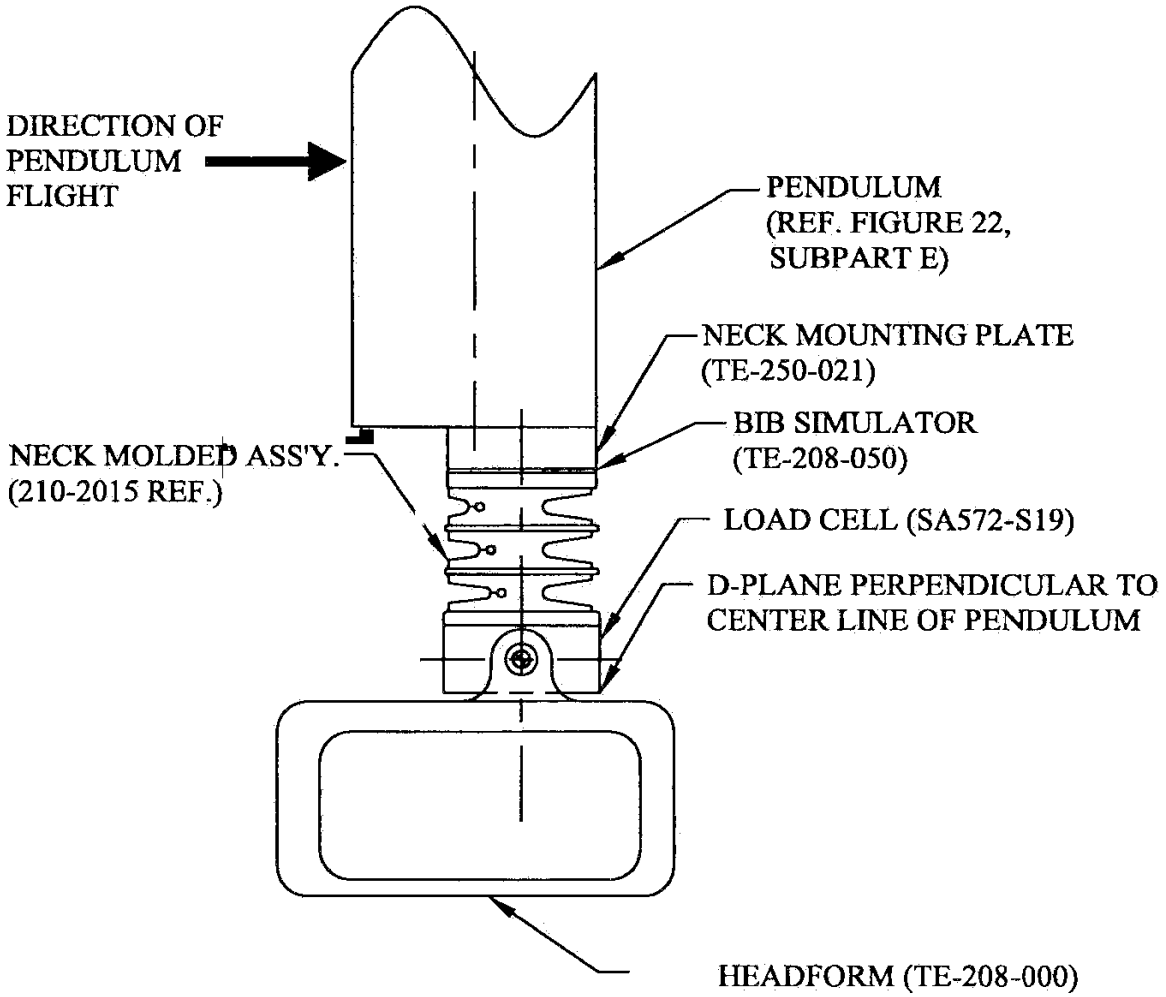

NOTE: MOUNT NECK AT LEADING EDGE OF PENDULUM TO AVOID INTERFERENCE WITH HEADFORM MOTION.
PENDULUM SHOWN IN VERTICAL ORIENTATION.

FIGURE 10D

DATA SHEET D6
THORAX IMPACT TEST (572.144) (3 YEAR-OLD)

Dummy Serial Number _____ Test Date _____

Technician _____

__Pretest calibration
__Post test calibration verification

Test attempt no. ____ (when successive thorax impact tests are necessary)

__1. It has been at least 30 minutes since the last thorax impact test. (572.146(p))
__ N/A, ONLY one thorax impact test performed
__2. The test fixture conforms to the specifications in Figure 11D.
__3. The complete assembled dummy (210-0000) is used (572.144(b)) and is dressed in cotton-polyester-based tight-fitting long sleeved shirt and ankle length pants. The weight of the shirt and pants shall not exceed 0.25 kg. (572.144(c)(1))
__4. The dummy assembly soaked at a temperature between 20.6°C (69ºF) and 22.2°C (72ºF) and at a relative humidity from 10% to 70% for a period of at least four (4) hours prior to this test. (572.144(c)(2))
Record the maximum temperature _____
Record the minimum temperature _____
Record the maximum humidity _____
Record the minimum humidity _____
__5. Remove the arms.
__6. Unzip the 3 zippers and fold down the chest jacket. Visually inspect the thorax assembly for cracks, cuts, abrasions, etc. Particular attention should be given to the rib damping material, chest displacement transducer assembly and the rear rib supports. Inspect for rib deformation using the chest depth gage. If any damage is noted repair and/or replace the damaged components unless the damage resulted from the vehicle crash test in which the dummy was an occupant in which case the damage must be documented and post test calibration verification testing completed before any repairs or replacements are made.
__ - No damage
__ - Damage from crash test, no repairs or replacement because this is a post test calibration verification. Record damage _____
_____
__ - The following repairs or replacement was performed. Record _____
_____
_____
__7. Seat the dummy, without back and arm supports on the test fixture surface as shown in Figure 11D. The surface must be long enough to support the pelvis and outstretched legs. (572.144(c)(3))
__8. Level the middle rib both longitudinally and laterally ± 0.5º. (572.144(c)(3))
__9. The midsagittal plane of the dummy is vertical within ± 1º. (572.144(c)(3))

__10. The longitudinal centerline of the test probe is centered within ±2.5 mm of the midsagittal plane of the dummy and is centered on the center of the No. 2 rib within ± 2.5 mm within ±0.5º of a horizontal line in the dummy's midsagittal plane. (572.144(c)(4))

__11. Record locations such as the rear surfaces of the thoracic spine and the lower neck bracket reference with respect to the laboratory coordinate system. These reference measurements are necessary to ensure the dummy is in the same position after the chest skin is rolled up and zipped, and the arms installed. The reference locations must be accessible after the chest skin is rolled up and the arms installed. It will be necessary to leave the chest skin zipper unfastened until the references are checked and then fasten it just prior to the test.

__12. Install the chest skin and arms, and reposition the dummy using the reference measurements recorded.

__13. Place the upper arms parallel to the torso. Place the lower arms horizontal and forward and parallel to the midsagittal plane. (572.144(c)(3))

__14. The data acquisition system, including transducers, must conform to the requirements of SAE Recommended Practice J211/1 MAR95 (572.146(l)).

__15. Impact the anterior surface of the thorax with the test probe so the longitudinal centerline of the probe is within 2º of a horizontal line in the dummy's midsagittal plane at the moment of impact. (572.144(c)(5)) The velocity of the test probe at the time of impact is between 5.9 m/s and 6.1 m/s. (572.144(b)) The probe is guided so there is no significant lateral, vertical or rotational movement during the impact. (572.144(c)(6) Neither the suspension hardware, suspension cables, nor other attachments to the probe, including the velocity vane, make contact with the dummy. (572.144(c)(7)

__16. Complete the following table:

Thorax Impact Results (572.144(b)(1)&(2)

Parameter*	Specification	Result
Test Probe Speed	5.9 m/s ≤ speed ≤ 6.1 m/s	
Chest Compression	32 mm ≤ compression ≤ 38 mm	
Peak force** between 32 and 38 mm chest compression	680 N ≤ peak force ≤ 810 N	
Peak force** between 12.5 and 32.0 mm chest compression	Peak force ≤ 910 N	
Internal Hysteresis***	65% ≤ hysteresis ≤ 85%	

*Time zero is defined as the time of initial contact between the test probe and the chest skin.
**Force = impactor mass x acceleration (572.144(b)(3))
***Area under loading curve minus the area under the unloading curve divided by the area under the loading curve. (Figure 12D)

__17. Plots of chest compression, pendulum acceleration, pendulum force, and force versus deflection follow this sheet.

_____ _____
Signature Date

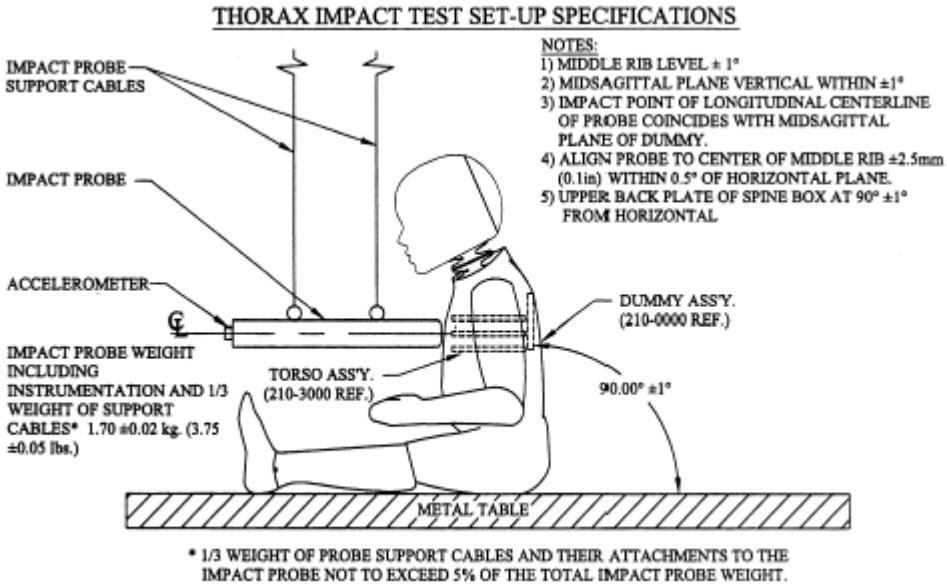

Probe specifications:

1. Rigid metallic construction, concentric its longitudinal axis.
2. A mass of 1.7 ± 0.02 kg (3.75 ± 0.05 lbs). 1/3 of the weight of the suspension cables and their attachments to the impact probe are included in the calculation of mass, and such components may not exceed 5 percent of the total weight of the test probe.
3. Minimum mass moment of inertia of 164 kg-cm^2 (0.145 lbs-in-sec^2) in yaw and pitch about the center of gravity.
4. The impacting end of the probe is perpendicular to and concentric with the longitudinal axis. It has a flat, continuous, and non-deformable face with diameter of 50.8 ± 0.2 mm (2.00 ± 0.01 in) and a maximum edge radius of 7.6-12.7 mm (0.3-0.5 in).
5. The impactor is a cylinder with a diameter of 53.3 mm (2.1 in) and it is at least 25.4 mm (1.0 in) long.
6. The probe's end opposite to the impact face must have provisions for mounting of an accelerometer with its sensitive axis collinear with the longitudinal axis of the probe.
7. The impact probe shall have a free air resonant frequency of not less than 1000 Hz in the direction of the longitudinal direction of the impactor.

FIGURE 11D

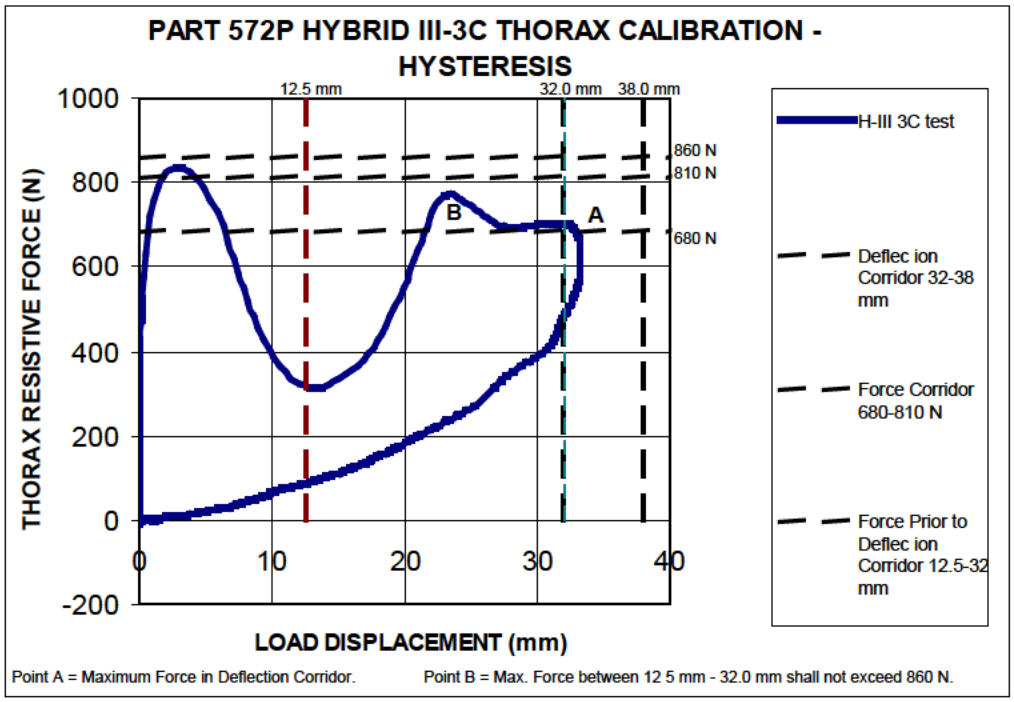
PART 572P HYBRID III-3C THORAX CALIBRATION - HYSTERESIS
12.5 mm
32.0 mm
38.0 mm
860 N
810 N
680 N
B
A
1000
800
600
400
200
0
-200
0
10
20
30
40
THORAX RESISTIVE FORCE (N)
LOAD DISPLACEMENT (mm)
H-III 3C test
Deflec ion Corridor 32-38 mm
Force Corridor 680-810 N
Force Prior to Deflec ion Corridor 12.5-32 mm
Point A = Maximum Force in Deflection Corridor.
Point B = Max. Force between 12 5 mm - 32.0 mm shall not exceed 860 N.

FIGURE 12D

DATA SHEET D7
TORSO FLEXION TEST (572.145) (3 YEAR-OLD)

Dummy Serial Number _____ Test Date _____

Technician _____

__Pretest calibration
__Post test calibration verification

Test attempt no. ____ (when successive torso flexion tests are necessary)

__1. It has been at least 30 minutes since the last torso flexion test. (572.146(p))
__ N/A, ONLY torso flexion test performed
__2. The test fixture conforms to the specifications in Figure 13D.
__3. The complete assembled dummy (210-0000) is used with or without the lower legs. (572.145(c)(2)).
__ with legs below the femurs.
__ without legs below the femurs.
__4. The dummy assembly soaked at a temperature between 18.9^{o}C (66ºF) and 25.6^{o}C (78ºF) and at a relative humidity from 10% to 70% for a period of at least four (4) hours prior to this test. (572.145(c)(1))
Record the maximum temperature _____
Record the minimum temperature _____
Record the maximum humidity _____
Record the minimum humidity _____
__5. Unzip the torso jacket and remove the lumbar load transducer or its structural replacement from the dummy. Attach the rigid pelvis attachment fixture to the lumbar spine. (572.145(c)(2)(i)&(ii))
__5. Secure the fixture to the table so that the pelvis-lumbar joining surface is horizontal within ±1° and the buttocks and upper legs of the seated dummy are in contact with the test surface. (572.145(c)(2)(iii))
__6. Attach the loading adapter bracket to the upper part of the torso as shown in Figure 13D and zip up the torso jacket**.** (572.145(c)(2)(iv))
__7. Place the upper arms parallel to the torso and the lower arms extended horizontally and forward, parallel to the midsagittal plane. (572.145(c)(2)(v))
__8. Flex the dummy forward and back 3 times such that the angle of the torso reference plane moves between 0° and 30° ± 2°. The torso reference plane is defined by the transverse plane tangent to the posterior surface of the upper backplate of the spine box weldment (210-8020). (572.145(c)(3)(i))
__9. Remove all externally applied flexion forces and support the dummy such that the torso reference plane is at or near 0°. Wait at least 30 minutes before continuing. (572.135(c)(3)(ii))
__10. Remove all external support that was implemented in 9 above and wait 2 minutes. (572.145(c)(4))

__11. Measure the initial orientation angle of the upper torso reference plane of the seated, unsupported dummy. (572.145(c)(4))
Record reference plane angle (max. allowed 15°)_____

__12. Attach the pull cable and the load cell while maintaining the initial torso orientation. (572.145(c)(5))

__13. Apply a tension force in the midsagittal plane to the pull cable at any upper torso deflection rate between 0.5^o and 1.5^o per second, until the torso reference plane reaches $45^o \pm 0.5^o$ of flexion relative to the vertical transverse plane. (572.145(c)(5))

__14. Maintain angle reference plane at $45^o \pm 0.5^o$ of flexion for 10 seconds and record the highest applied force during this period. (572.145(c)(6))

__15. As quickly as possible release the force applied to the attachment bracket. (572.145(c)(8))

__16. 3 to 4 minutes after the release of the force, measure the angle reference plane. (572.145(c)(8))

__17. Complete the following table:

Torso Flexion Results (572.145(b)(1)&(2), 572.145(c)(4), (572.145(c)(5))

Parameter	Specification	Result
Initial ref. plane angle	Angle $\leq 15^o$	
Torso rotation rate	$0.5^o/s \leq$ rate $\leq 1.5^o/s$	
Force at $45^o \pm 0.5^o$	130 N $\leq$ force $\leq$ 180 N	
Final ref. plane angle	Initial ref. plane angle $\pm 10^o$	

__18. A plot of the force versus time follows this sheet.

_____ _____
Signature Date

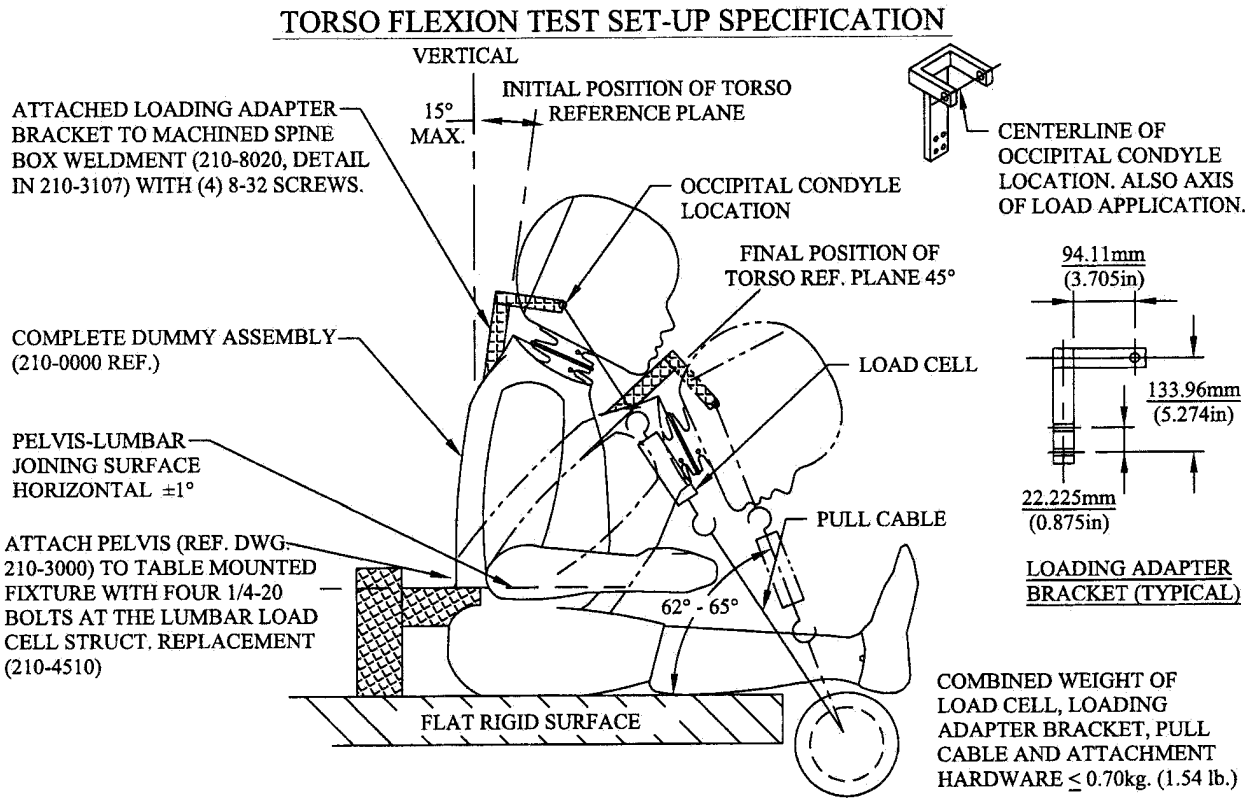
TORSO FLEXION TEST SET-UP SPECIFICATION
VERTICAL
15° MAX.
INITIAL POSITION OF TORSO REFERENCE PLANE
ATTACHED LOADING ADAPTER BRACKET TO MACHINED SPINE BOX WELDMENT (210-8020, DETAIL IN 210-3107) WITH (4) 8-32 SCREWS.
OCCIPITAL CONDYLE LOCATION
CENTERLINE OF OCCIPITAL CONDYLE LOCATION. ALSO AXIS OF LOAD APPLICATION.
FINAL POSITION OF TORSO REF. PLANE 45°
94.11mm (3.705in)
COMPLETE DUMMY ASSEMBLY (210-0000 REF.)
LOAD CELL
133.96mm (5.274in)
PELVIS-LUMBAR JOINING SURFACE HORIZONTAL ±1°
22.225mm (0.875in)
PULL CABLE
ATTACH PELVIS (REF. DWG. 210-3000) TO TABLE MOUNTED FIXTURE WITH FOUR 1/4-20 BOLTS AT THE LUMBAR LOAD CELL STRUCT. REPLACEMENT (210-4510)
LOADING ADAPTER BRACKET (TYPICAL)
62° - 65°
COMBINED WEIGHT OF LOAD CELL, LOADING ADAPTER BRACKET, PULL CABLE AND ATTACHMENT HARDWARE ≤ 0.70kg. (1.54 lb.)
FLAT RIGID SURFACE

FIGURE 13D

DATA SHEET D8

PART 572 INSTRUMENTATION CALIBRATION INFORMATION

I.D. NO.	MANUFACTURER	MODEL NO.	SERIAL NO.	DATE OF LAST CALIBRATION	DATE OF NEXT CALIBRATION
DUMMY INSTRUMENTATION					
HEAD ACCELEROMETERS					
(1) LONGITUDINAL					
(2) LATERAL					
(3) VERTICAL					
NECK TRANSDUCER					
CHEST ACCELEROMETERS					
(1) LONGITUDINAL					
(2) LATERAL					
(3) VERTICAL					
CHEST POTENTIOMETER					
FEMUR LOAD CELLS					
(1) RIGHT FEMUR					
(2) LEFT FEMUR					
LABORATORY INSTRUMENTATION					
NECK PENDULUM ACCELEROMETER					
THORAX PENDULUM ACCELEROMETER					
KNEE PENDULUM ACCELEROMETER					
NECK ROTATION TRANSDUCER 1 (OPTIONAL)					
NECK ROTATION TRANSDUCER 2 (OPTIONAL)					

LABORATORY TECHNICIAN: _____

APPENDIX E

PART 572R (12-MONTH-OLD) DUMMY
PERFORMANCE CALIBRATION TEST PROCEDURE

APPENDIX E
PART 572, SUBPART R DUMMY PERFORMANCE CALIBRATION TEST PROCEDURE

1. PURPOSE AND APPLICATION 1
2. GENERAL REQUIREMENTS 1
3. SECURITY 1
4. GOOD HOUSEKEEPING 2
5. TEST SCHEDULING AND MONITORING 2
6. TEST DATA DISPOSITION 2
7. GOVERNMENT FURNISHED PROPERTY (GFP) 2
8. CALIBRATION AND TEST INSTRUMENTATION 5
9. PHOTOGRAPHIC DOCUMENTATION 6
10. DEFINITIONS 6
11. PRETEST REQUIREMENTS 6
    11.1 TRANSDUCER REQUIREMENTS 6
    11.2 OTHER TRANSDUCER CONDITIONS 7
    11.3 THORAX IMPACTOR PROBE (572.155(a)) 7
    11.4 GENERAL TEST CONDITIONS 11
12. CALIBRATION TEST EXECUTION 11
13. POST TEST REQUIREMENTS 11
14. REPORTS 11
    14.1 APPARENT NONCONFORMANCE 11
    14.2 FINAL PERFORMANCE CALIBRATION REPORTS 12
15. DATA SHEETS 13
    DATA SHEET E1 13
    DATA SHEET E2 15
    DATA SHEET E3 20
    DATA SHEET E4 23
    DATA SHEET E5 26
    DATA SHEET E6 28
    DATA SHEET E7 33
    DATA SHEET E8 36

1. PURPOSE AND APPLICATION

The purpose of this laboratory procedure is to provide dummy users (independent testing laboratories under contract with the Office of Crashworthiness Standards) with standard test procedures for performing receiving-inspection and performance calibration tests on the Part 572, Subpart R dummy so that repetitive and correlative test results can be obtained. The following tests have been developed to establish a uniform calibration procedure for all users as the means of verifying the performance of the dummy.

A. EXTERNAL DIMENSIONS (PADI)

B. HEAD DROP TEST (572.152)

C. NECK FLEXION TEST (572.153(b)(1))

D. NECK EXTENSION TEST 572.153(b)(2)

E. THORAX IMPACT TEST ((572.154)

National Highway Traffic Safety Administration (NHTSA) contract laboratories performing NCAP testing for the Office of Crashworthiness Standards (OCWS) must use this laboratory procedure for the calibration of Part 572, Subpart R dummies.

2. GENERAL REQUIREMENTS

The Code of Federal Regulations (49CFR), Parts 571 and 572, was amended to adopt the Hybrid III, CRABI 12-Month-Old Dummy as the means of determining a vehicle's conformance to the performance requirements of FMVSS 208. Each Part 572, Subpart R dummy used in an NCAP test must meet the specifications and performance criteria of Part 572 before and after each vehicle crash test in order to be an acceptable test tool.

The Part 572, Subpart R Hybrid III, CRABI 12-Month-Old Dummy consists of components and assemblies specified in the drawing and specifications package which is available from Reprographics Technologies, 9000 Virginia Manor, Beltsville, MD 20705,
telephone - (301) 419-5070.

3. SECURITY

All NHTSA Part 572, Subpart R test dummies delivered to the contract laboratory as Government Furnished Property (GFP) will be stored in a safe and secure area such as a dummy calibration laboratory. The contractor is financially responsible for any acts of theft and/or vandalism that occur during the storage of GFP. Any security problems shall be reported by telephone to the Industrial Property Manager (IPM), Office of Contracts and Procurement, within two working days after the incident. A letter containing specific details of the security problem will be sent to the IPM (with copy to the COTR) within 48 hours.

The contractor is responsible for maintaining the NHTSA test dummies in good working order, and shall protect and segregate the data that evolves from conducting Part 572, Subpart R dummy calibration tests before and after each vehicle test usage.

No Information concerning the Part 572, Subpart R dummy calibration data shall be released to anyone except the COTR, unless specifically authorized by the COTR or the COTR's Branch or Division Chief.

NOTE: No Individuals, other than contractor personnel directly involved in the dummy calibration test program, shall be allowed to witness dummy calibration tests unless specifically authorized by the COTR.

4. GOOD HOUSEKEEPING

Contractors shall maintain the entire dummy calibration laboratory, test fixtures, and instrumentation in a neat, clean, and painted condition with test instruments arranged in an orderly manner consistent with good test laboratory housekeeping practices.

5. TEST SCHEDULING AND MONITORING

The Part 572, Subpart R dummies are being calibrated as test tools to be used in NCAP vehicle crash tests. The schedule for these performance calibration tests must be correlated with that of the vehicle tests. All testing shall be coordinated to allow monitoring by the COTR.

6. TEST DATA DISPOSITION

The contractor shall make all dummy calibration data available to the COTR for review and analysis as required. All calibration test data for each particular Part 572, Subpart R dummy will be sent to the COTR with each test report.

All backup data sheets, strip charts, recordings, plots, technicians’ notes, etc. shall be either sent to the COTR or destroyed at the conclusion of each delivery order, purchase order, etc.

7. GOVERNMENT FURNISHED PROPERTY (GFP)

Part 572, Subpart R test dummies will be furnished to the contract laboratory by the OCWS. The dummies shall be stored in a hanging position using the bracket and positioning shown in drawings 1E and 2E.

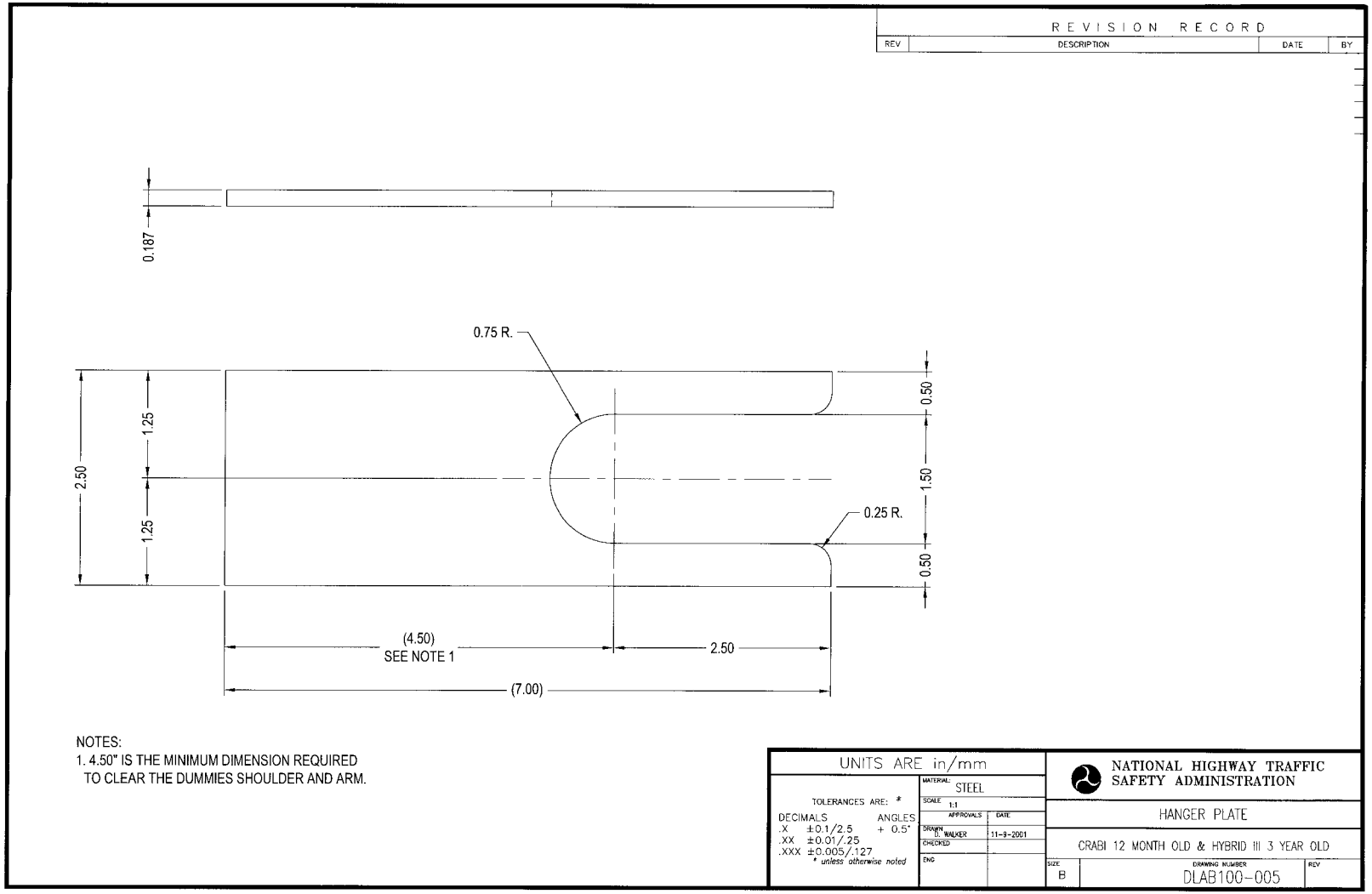
REVISION RECORD
REV
DESCRIPTION
DATE
BY
0.187
0.75 R.
0.25 R.
2.50
1.25
1.25
0.50
1.50
0.50
(4.50)
SEE NOTE 1
2.50
(7.00)
NOTES:
1. 4.50" IS THE MINIMUM DIMENSION REQUIRED
TO CLEAR THE DUMMIES SHOULDER AND ARM.
UNITS ARE in/mm
TOLERANCES ARE: *
DECIMALS
.X ±0.1/2.5
.XX ±0.01/.25
.XXX ±0.005/.127
ANGLES
± 0.5°
* unless otherwise noted
MATERIAL: STEEL
SCALE 1:1
APPROVALS
DATE
DRAWN D. WALKER
11-9-2001
CHECKED
ENG
NATIONAL HIGHWAY TRAFFIC
SAFETY ADMINISTRATION
HANGER PLATE
CRABI 12 MONTH OLD & HYBRID III 3 YEAR OLD
SIZE B
DRAWING NUMBER
DLAB100-005
REV

FIGURE 1E

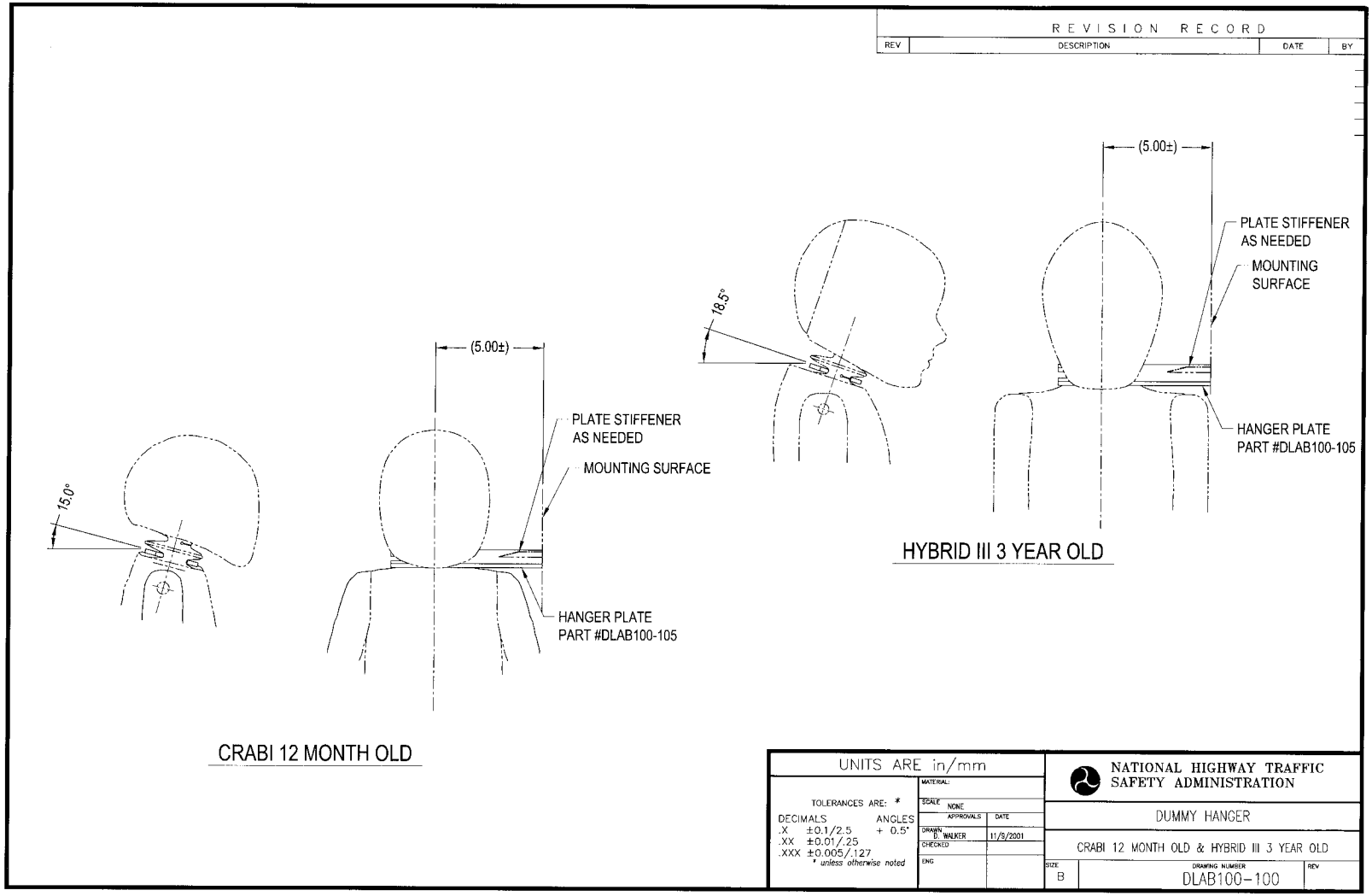
REVISION RECORD
REV
DESCRIPTION
DATE
BY
(5.00±)
PLATE STIFFENER AS NEEDED
MOUNTING SURFACE
HANGER PLATE PART #DLAB100-105
18.5°
HYBRID III 3 YEAR OLD
15.0°
CRABI 12 MONTH OLD
UNITS ARE in/mm
TOLERANCES ARE: *
DECIMALS
.X ±0.1/2.5
.XX ±0.01/.25
.XXX ±0.005/.127
ANGLES
± 0.5°
* unless otherwise noted
MATERIAL:
SCALE NONE
APPROVALS
DATE
DRAWN D. WALKER 11/9/2001
CHECKED
ENG
NATIONAL HIGHWAY TRAFFIC SAFETY ADMINISTRATION
DUMMY HANGER
CRABI 12 MONTH OLD & HYBRID III 3 YEAR OLD
SIZE B
DRAWING NUMBER DLAB100-100
REV

FIGURE 2E

These dummies shall be stored in a secured room that is kept between 55ºF and 85ºF. The contractor will check dummy components for damage after each crash test and complete a dummy damage checklist (as part of the NCAP procedure), which will be included with the dummy calibration, if requested. The COTR will be kept informed of the dummies' condition so that replacement parts can be provided. The dummies will be calibrated by the contractor according to the schedule indicated in the NCAP test procedure.

8. CALIBRATION AND TEST INSTRUMENTATION

Before the contractor initiates the dummy performance calibration test program, a test instrumentation calibration system must be implemented and maintained in accordance with established calibration practices. The calibration system shall be set up and maintained as follows:

A. Standards for calibrating the measuring and test equipment shall be stored and used under appropriate environmental conditions to assure their accuracy and stability.

B. All measuring instruments and standards shall be calibrated by the contractor, or a commercial facility, against a higher order standard at periodic intervals not exceeding 12 months for instruments and 12 months for calibration standards. Records, showing the calibration traceability to the National Institute of Standards and Technology (NIST), shall be maintained for all measuring and test equipment.

C. All measuring and test equipment and measuring standards shall be labeled with the following information:

1. Date of calibration

2. Date of next scheduled calibration

3. Name of the technician who calibrated the equipment

D. The contractor shall provide a written calibration procedure that includes, as a minimum, the following information for all measurement and test equipment:

1. Type of equipment, manufacturer, model number, etc.

2. Measurement range

3. Accuracy

4. Calibration interval

5. Type of standard used to calibrate the equipment (calibration traceability of the standard must be evident)

6. The actual procedures and forms used to perform calibrations.

E. The contractor shall keep records of calibrations for all test instrumentation in a manner that assures the maintenance of established calibration schedules. All such records shall be readily available for inspection when requested by the COTR. The calibration system will need the written acceptance of the COTR before testing begins.

F. Test equipment shall receive a calibration check immediately prior to and after each test. This check shall be recorded by the test technician(s) and submitted with the final report.

G. Anthropomorphic test devices shall be calibrated as indicated in NCAP test procedure. These calibrations shall be submitted with the final report.

9. PHOTOGRAPHIC DOCUMENTATION

Provide still photographs (color prints properly focused for clear images, no more than two (2) per 8.5”x11” sheet) of post test damage resulting from the vehicle crash test.

10. DEFINITIONS

PADI: Procedures for Assembly, Disassembly, and Inspection

11. PRETEST REQUIREMENTS

11.1 TRANSDUCER REQUIREMENTS

The contractor shall provide and install the following instrumentation to the GFP dummies (excluding the chest deflection transducer).

A. HEAD – The head accelerometers shall have dimensions, response characteristics and sensitive mass locations specified in drawing SA572-S4 and be mounted in the head as shown in drawing 921022-000. (572.155(b))

Three accelerometers shall be mounted in the head cavity to measure orthogonal accelerations (Ax, Ay, Az) at the center of gravity (CG) of the head assembly.

B. NECK – The neck force-moment transducer shall have the dimensions, response characteristics, and sensitive axis locations specified in drawing SA572-S23 and shall be mounted as shown in drawing 921022-000. (572.155(c))

C. CHEST – The chest accelerometers shall have the dimensions, response characteristics, and sensitive mass locations specified in drawing SA572-S4 and be mounted in the torso assembly in triaxial configuration at the T4 location as shown drawing 921022-000. The chest accelerometers are not required for dummy calibration testing but are required for NCAP testing. (572.155(e))

D. TEST FIXTURE – The neck pendulum and thorax accelerometers shall have the dimensions and characteristics of drawing SA572-S4.

11.2 OTHER TRANSDUCER CONDITIONS

A. TRANSDUCER MOUNTS – The mountings for sensing devices shall have no resonance frequency less than 3 times the frequency range of the applicable channel class. (572.155(k))

B. TRANSDUCER SIGN CONVENTION - The sign convention for outputs of transducers mounted within the dummy that measure head and chest accelerations, chest deflection and neck loads are located in Figure 3E. For other transducers see SAE J1733DEC94. (572.155(i))

C. TRANSDUCER OUTPUT FILTERING - The outputs of acceleration and force-sensing devices installed in the dummy and in the test apparatus specified by this part are recorded with individual data channels. Each data channel will be comprised of a sensor, signal conditioner, data acquisition device, and all interconnecting cables, and must conform to the requirements of SAE Recommended Practice J211/1 MAR95, "Instrumentation for Impact Test," with channel classes as follows: (572.155(i))

1. Head acceleration	Class 1000	(572.155(i)(1))
2. Neck force	Class 1000	(572.155(i)(2)(i))
3. Neck moment	Class 600	(572.155(i)(2)(ii))
4. Neck pendulum acceleration	Class 180	(572.155(i)(2)(iii))
5. Neck rotation transducers	Class 60	(572.155(i)(2)(iv))
6. Thorax spine acceleration	Class 180	(572.155(i)(3)(ii))
7. Thorax pendulum	Class 180	(572.155(i)(3)(ii))
8. acceleration		

All filter classes should be of the "phaseless" type to be compatible with the "time" dependent test parameters.

11.3 THORAX IMPACTOR PROBE (572.155(a))

A. The test probe for thoracic impacts shall be of rigid metallic construction, concentric about its longitudinal axis.

B. It shall have a mass of 2.86 ± 0.02 kg (6.3 ± 0.05 lbs). 1/3 of the weight of the suspension cables and any attachments to the impact probe must be included in

the calculation of mass, and such components may not exceed 5 percent of the total weight of the test probe.

C. It shall have a minimum mass moment of inertia of 164 kg-cm^2 (0.145 lbs-in-sec^2) in yaw and pitch about the center of gravity.

D. The impacting end of the probe is perpendicular to and concentric with the longitudinal axis. The face has a diameter of 101.6 ± 0.25 mm (4.00 ± 0.01 in), a maximum edge radius of 7.6 to 12.7 mm (0.3 to 0.5 in) and is flat, continuous and non-deformable.

E. A 101-103 mm diameter cylinder surface extends at least 12.5 mm to the rear of the impact face.

F. The probe's end opposite to the impact face must have provisions for mounting of an accelerometer with its sensitive axis collinear with the longitudinal axis of the probe.

G. The impact probe shall have a free air resonant frequency of not less than 1000 Hz measured in line with the longitudinal axis of the impactor.

SIGN CONVENTION FOR PART 572 TEST DUMMIES

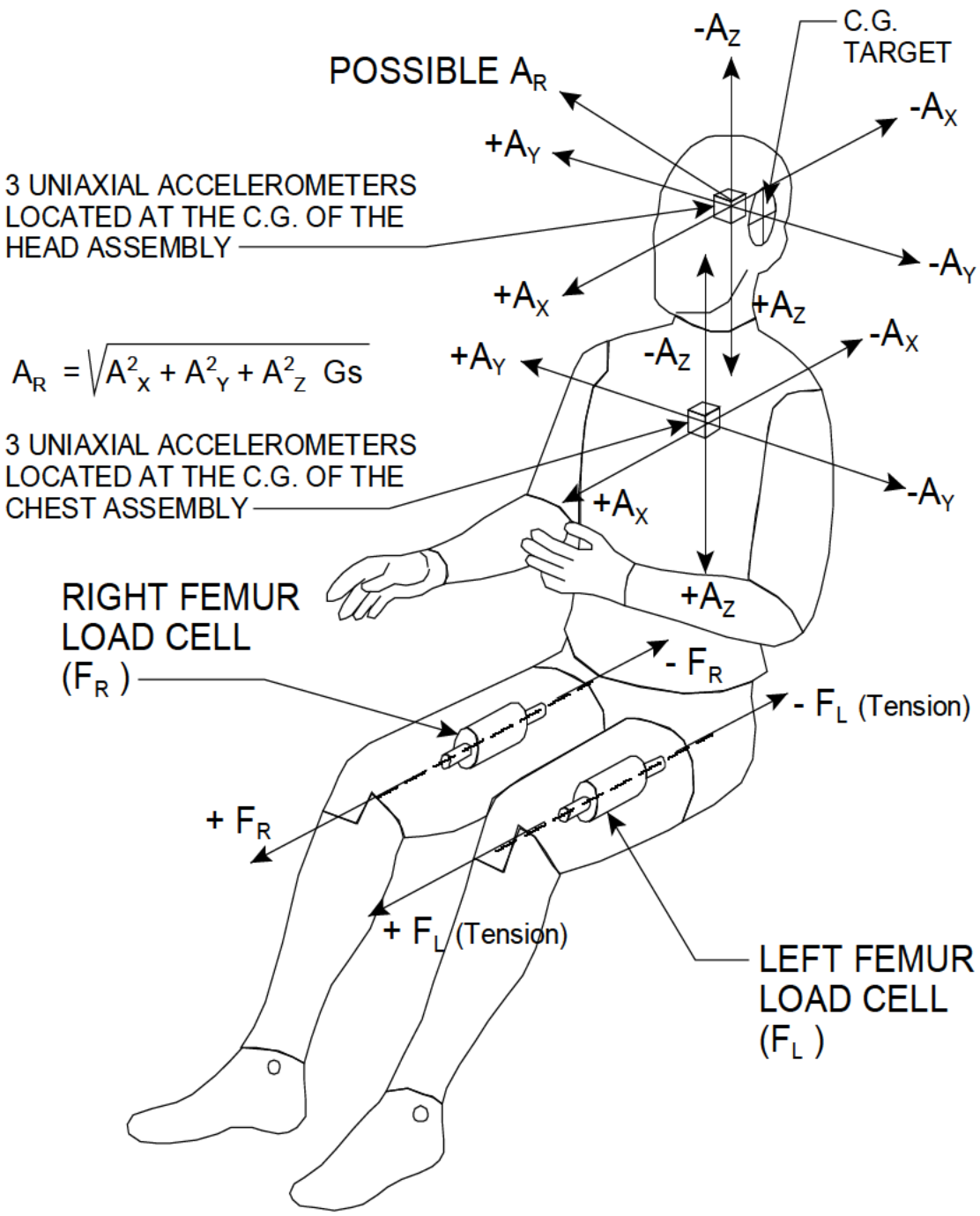

FIGURE 3E

TABLE 1E

SIGN CONVENTION FOR HYBRID III TRANSDUCER OUTPUTS	
BODY SEGMENT — MEASURED FORCE	**POSITIVE OUTPUT DIRECTION**
NECK	
FX SHEAR	HEAD REARWARD OR CHEST FORWARD
FY SHEAR	HEAD LEFTWARD, CHEST RIGHTWARD
FZ AXIAL	HEAD UPWARD, CHEST DOWNWARD
MX MOMENT (ROLL)	LEFT EAR TOWARD LEFT SHOULDER
MY MOMENT (PITCH)	CHIN TOWARD STERNUM
MZ MOMENT (YAW)	CHIN TOWARD LEFT SHOULDER
LEFT SHOULDER	
FX	LEFT ARM/SHOULDER FORWARD, CHEST REARWARD
FZ	LEFT ARM/SHOULDER DOWNWARD, CHEST UPWARD
RIGHT SHOULDER	
FX	RIGHT ARM/SHOULDER FORWARD, CHEST REARWARD
FZ	RIGHT ARM/SHOULDER DOWNWARD, CHEST UPWARD
LUMBAR SPINE	
FX	CHEST REARWARD, PELVIS FORWARD
FY	CHEST LEFTWARD, PELVIS RIGHTWARD
FZ	CHEST UPWARD, PELVIS DOWNWARD
MX MOMENT	LEFT SHOULDER TOWARD LEFT HIP
MY MOMENT	STERNUM TOWARD FRONT OF LEGS
MZ MOMENT	RIGHT SHOULDER FORWARD, LEFT SHOULDER REARWARD
PUBIC	
FX SHEAR	PUBIC REARWARD, CHEST FORWARD
FZ AXIAL	PUBIC UPWARD, CHEST DOWNWARD

NOTE: DIRECTIONS ARE DEFINED IN RELATION TO A SEATED DUMMY

11.4 GENERAL TEST CONDITIONS

A. Surfaces of dummy components are not painted unless otherwise specified. (572.155(n))

B. Dummy performance tests of the same component, segment, assembly, or fully assembled dummy are separated in time by a period of not less than 30 minutes unless otherwise specified. (572.155(m))

C. The dummy head performance tests are conducted at any temperature from 18.9°C (66ºF) to 25.6°C (78ºF) and at any relative humidity from 10% to 70% after exposure of the dummy to these conditions for a period of not less than 4 hours. For the neck-headform assembly and thorax assembly, the temperature range is 20.6°C (69ºF) to 22.2°C (72ºF) and at any relative humidity from 10% to 70% after exposure of the dummy to these conditions for a period of not less than 4 hours.

D. Dummy limb joints are set at 1 G, barely restraining the weight of the limb when it is extended horizontally. The force required to move a limb segment does not exceed 2 Gs throughout the range of limb motion. (572.155(l))

E. Dummies will be clothed for the thorax calibration tests with a form fitting cotton-polyester-based tight-fitting sweat shirt with long sleeves and ankle length pants. The total weight of the shirt and pants shall not exceed 0.25 kg (0.55 lb). (572.154(c)(2))

12. CALIBRATION TEST EXECUTION

Complete the Data Sheets in section 15.

13. POST TEST REQUIREMENTS

The contractor shall verify all instrumentation and check data sheets and photographs. Make sure data is recorded in all data blocks on every performance calibration test data sheet.

14. REPORTS

14.1 APPARENT NONCONFORMANCE

During the a calibration verification, any indication of apparent nonconformance to the requirements of Regulation P572 shall be communicated by telephone to the COTR within 24 hours with written notification mailed within 48 hours (Saturdays and Sundays excluded). Written notification shall be submitted with a copy of the particular test data sheet(s) and preliminary data plot(s).

In the event of an apparent nonconformance, a calibration check of some critically sensitive test equipment and instrumentation may be required for verification of accuracy. The necessity for the calibration shall be at the COTR's discretion and shall be performed without additional costs to the OCWS.

14.2 FINAL PERFORMANCE CALIBRATION REPORTS

14.2.1 COPIES

A report containing the calibration data for each Part 572, Subpart R dummy used in the vehicle crash test shall be submitted with the final NCAP test report for the vehicle.

Contractors are required to PROOF READ all Final Test Reports before submittal to the COTR. The OCWS will not act as a report quality control office for contractors. Reports containing a significant number of errors will be returned to the contractor for correction, and a "hold" will be placed on invoice payment for the particular test.

15. DATA SHEETS

DATA SHEET E1

DUMMY DAMAGE CHECKLIST (12-MONTH-OLD)

Dummy Serial Number _____ Test Date _____

Technician _____

This check sheet is completed as part of the calibration verification.

Indicate NA in the OK column for any components not applicable to this size dummy.

__Perform general cleaning.

Dummy Item	***Inspect for***	***Comments***	***Damaged***	***OK***
Outer skin	Gashes, rips, cracks			
Head	Ballast secure			
	General appearance			
Neck	Broken or cracked rubber			
	Upper neck bracket firmly attached to the lower neck bracket			
	Looseness at the condyle joint			
	Nodding blocks cracked or out of position			
Spine	Broken or cracks in rubber.			
Ribs	Broken or bent ribs			
	Broken or bent rib supports			
	Damping material separated or cracked			
	Rubber bumpers in place			
Chest Displacement Assembly	Bent shaft			
	Slider arm riding in track			
Transducer leads	Torn cables			

Dummy Item	***Inspect for***	***Comments***	***Damaged***	***OK***
Accelerometer Mountings	Head mounting secure			
	Chest mounting secure			
Knees	Skin condition			
	Insert (do not remove)			
	Casting			
Limbs	Normal movement and adjustment			
Knee Sliders	Wires intact			
	Rubber returned to “at rest” position			
Pelvis	Broken			
Other				

If upon visual examination, damage is apparent in any of these areas, the appropriate engineer or engineering technician is to be consulted for a decision on repair or replacement of parts.
Repair or Replacement approved by:

_____ _____
Signature Date

Describe the repair or replacement of parts:

Checked by

_____ _____
Signature Date

DATA SHEET E2
EXTERNAL MEASUREMENTS (12-MONTH-OLD)
(See the PADI, pages 52-55)

Dummy Serial Number _____ Test Date _____

Technician _____

__Pretest calibration
__Post test calibration verification

__1. Seat the dummy on a flat, rigid, smooth, clean, dry, horizontal surface. The seating surface is at least 406 mm (16 in) wide and 221 mm (8 11/16 in) in depth with a vertical section at least 406 mm (16 in) wide and 610 mm (24 in) high attached to the rear of the seating fixture. The dummy's midsagittal plane is vertical and centered on the test surface.
__2. Secure the dummy to the test fixture so that the upper torso and buttocks are tangent to the rear vertical surface of the fixture (as tangent as possible).
__3. Push the dummy's forehead rearward and secure the head (at the forehead) against the seat back surface.
__4. Place the centerlines of the upper arms vertical.
__5. Place the centerlines of the lower arms horizontal.
__6. Position the upper legs so that they are parallel to one another.
__7. Position the lower legs so that they are perpendicular to the upper legs and the bottom of the foot is horizontal.
__8. Record the dimensions listed in following table, except for dimension Q (reference figure 4E).
__9. Place the dummy in supine position on the measurement surface. Place a block that is perpendicular to the table at both the head and feet of the dummy. Position the blocks perpendicular to the midsaggital plane of the dummy. Position the blocks so they are in contact with the head and the heels of the dummy. Measure the distance between the blocks for Q.

_____ _____
Signature Date

HYBRID III, PART 572, SUBPART O EXTERNAL DIMENSIONS				
DIMENSION	DESCRIPTION	DETAILS	ASSEMBLY DIMENSION (mm)	ACTUAL MEASUREMENT
A	TOTAL SITTING HEIGHT	Seat surface to highest point on top of the head with head pulled back to touch vertical surface of fixture.	456-471.2	
B	SHOULDER PIVOT HEIGHT	Centerline of shoulder pivot bolt to the seat surface.	276.6-291.8	
C	HIP PIVOT HEIGHT	Centerline of hip pivot bolt to seat surface	27.9-38.1	
D	HIP PIVOT FROM BACKLINE	Centerline of hip pivot bolt to vertical surface of seat	40.1-50.3	
E	SHOULDER PIVOT FROM BACKLINE	Center of the shoulder pivot bolt to the fixture's rear vertical surface.	50.3-60.5	
F	THIGH CLEARANCE	Fixture's seat surface to highest point on the upper femur segment	63.0-73.2	
G	ELBOW PIVOT TO FINGERTIP	Elbow pivot to the finger tip, in line with the elbow and wrist centerlines	176.6-191.8	
I	SHOULDER PIVOT TO-ELBOW PIVOT	Shoulder pivot bolt to elbow pivot bolt	99.1-114.3	
J	ELBOW REST HEIGHT	Seat surface to bottom of lower arm	150.1-165.3	
K	BUTTOCK TO KNEE LENGTH	The forward most part of the knee flesh to the fixture's rear vertical surface	202.7-217.9	
L	POPLITEAL HEIGHT	Seat surface to the horizontal plane of the bottom of the feet.	138.7-153.9	
M	KNEE PIVOT HEIGHT	Centerline of knee pivot bolt to the horizontal plane of the bottom of the feet.	165.1-180.3	
N	BUTTOCK POPLITEAL LENGTH	The rearmost surface of the lower leg to the same point on the rear surface of buttocks used for dimension K	144.8-160	

HYBRID III, SUBPART R EXTERNAL DIMENSIONS, continued				
DIMENSION	DESCRIPTION	DETAILS	ASSEMBLY DIMENSION (mm)	ACTUAL MEASUREMENT
O	CHEST DEPTH WITH JACKET	Measured 261.6 ± 5.1 mm above seat surface	107.5-122.7	
P	FOOT LENGTH	Tip of toe to rear of heal	92.4-102.6	
Q	STATURE	Place the dummy in supine position on the measurement surface. Place a block that is perpendicular to the table at both the head and feet of the dummy. Position the blocks perpendicular to the midsaggital plane of the dummy. Position the blocks so they are in contact with the head and the heels of the dummy. Measure the distance between the blocks.	727.7-753.1	N/A
R	BUTTOCK TO KNEE PIVOT LENGTH	Knee pivot bolt to the fixture's rear vertical surface.	178.5-188.7	
S	HEAD BREADTH	Distance across the head at its widest point	124.4-134.6	
T	HEAD DEPTH	Distance from the forward most surface of the head to the rearmost surface of the head, in line with the midsgittal plane.	149.9-165.1	
U	HIP BREADTH	Distance across the width of the hip at the widest point of the jacket	158.5-173.7	
V	SHOULDER BREADTH	Distance between the outside edges of the shoulder flesh, in line with the shoulder pivot bolts	200.7-215.9	
W	FOOT BREADTH	The widest part of the foot	39.1-49.3	
Y	CHEST CIRCUMFERENCE WITH JACKET	Distance around chest at reference location AA, with jacket on. Measured 261.6 ± 5.1 mm above the seat surface.	452.4-477.8	
Z	WAIST CIRCUMFERENCE	Distance around waist at reference location BB, with jacket on. Measured 111.8 ± 5.1 mm above the seat surface.	447-472.4	
AA	REFERENCE LOCATION FOR DIMENSION Y & O	Reference: 261.6 ± 5.1 mm above the seat surface	256.5-266.7	

HYBRID III, SUBPART R EXTERNAL DIMENSIONS, continued				
DIMENSION	DESCRIPTION	DETAILS	ASSEMBLY DIMENSION (mm)	ACTUAL MEASUREMENT
BB	REFERENCE LOCATION FOR DIMENSION Z	Reference: 111.8 ± 5.1 mm above seat surface	106.7-116.9	
CC	SHOULDER HEIGHT	Top of arm to seat surface	299.7-314.9	
DD	CHIN HEIGHT	Bottom of chin to seat surface	289.6-304.8	

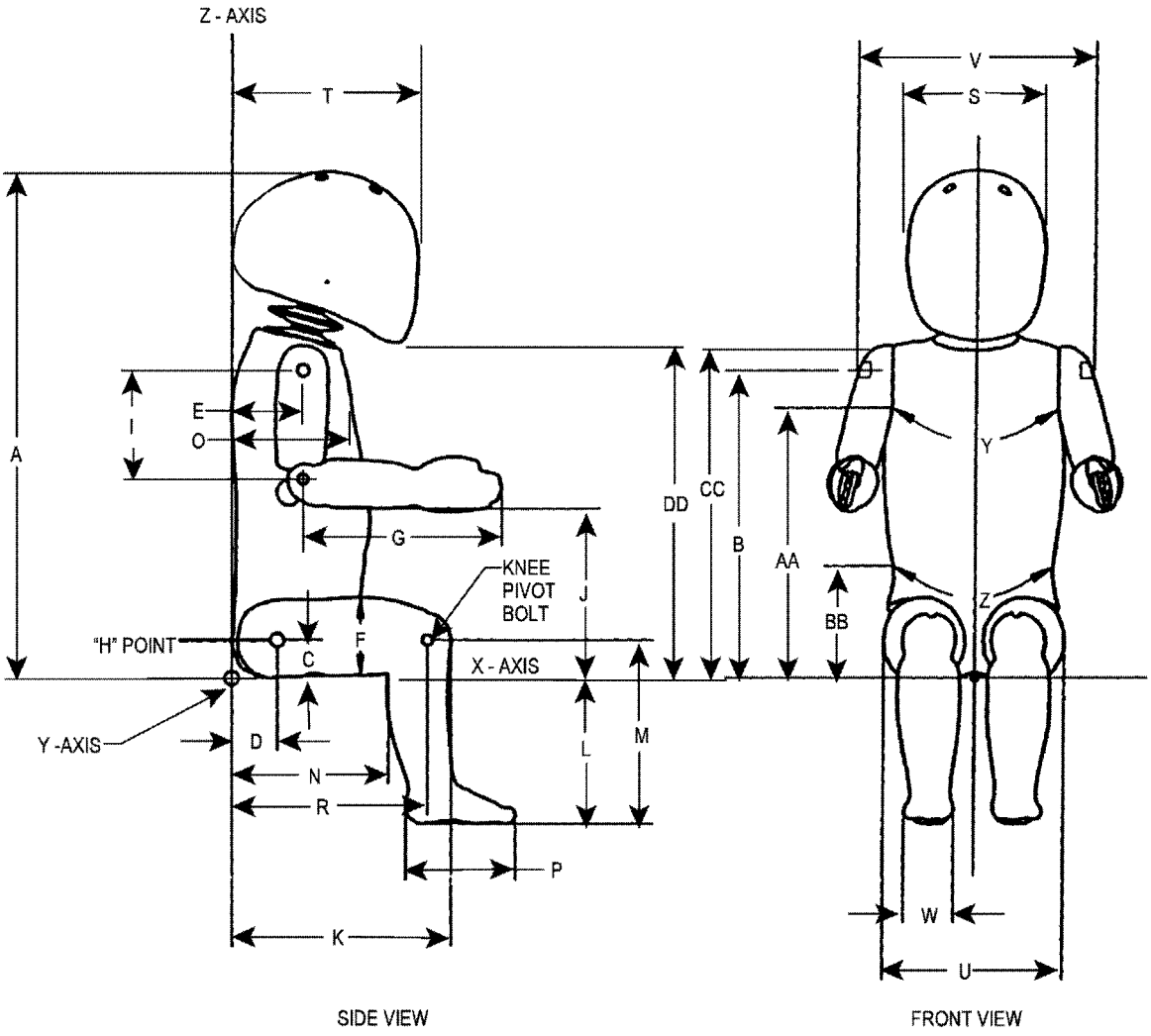
Z - AXIS
T
V
S
A
I
E
O
G
KNEE
PIVOT
BOLT
J
DD
CC
B
AA
BB
Y
Z
"H" POINT
C
F
X - AXIS
Y -AXIS
D
N
R
L
M
P
K
W
U
SIDE VIEW
FRONT VIEW

FIGURE 4E

DATA SHEET E3
FRONTAL HEAD DROP TEST (572.152) (12-MONTH-OLD)

Dummy Serial Number _____ Test Date _____

Technician _____

__Pretest calibration
__Post test calibration verification

Test attempt no. ____ (when successive head drops are necessary)

__1. It has been at least 2 hours since the last frontal head drop and at least 30 minutes since the last rear head drop. (572.152(c)(5))
__ N/A, ONLY one head drop performed

__2. The head assembly consists of the head (921022-001), triaxial accelerometer mounting block (SA572-S80), and three (3) accelerometers (SA572-S4). (572.152(a))

__3. Accelerometers and their respective mounts are smooth and clean.

__4. The data acquisition system, including transducers, conforms to the requirements of SAE Recommended Practice J211/1 MAR95. (572.155(i))

__5. The head assembly soaked at a temperature between 18.9^{o}C (66°F) and 25.6^{o}C (78°F) and at a relative humidity from 10% to 70% for a period of at least four (4) hours prior to a test. (572.152(c)(1))
Record the maximum temperature _____
Record the minimum temperature _____
Record the maximum humidity _____
Record the minimum humidity _____

__6. Visually inspect the head skin for cracks, cuts, abrasions, etc. Repair or replace the head if the damaged area is more than superficial. Note: If the damage resulted from the vehicle crash test in which the dummy was an occupant, the damaged area is to be documented with photography and the post test calibration verification testing completed before any replacement or repairs are made.
Record findings and actions: _____
_____
_____
_____
_____

__7. Clean the impact surface of the skin and the impact surface of the fixture with isopropyl alcohol, trichloroethane or equivalent prior to the test. (572.152(c)(2))

__8. Suspend and orient the head assembly as shown in Figure 5E. The lowest point on the forehead is 376.0 ± 1.0 mm (14.8±0.04 inch) from the impact surface. (572.152(c)(3)(i))
Record the actual distance _____

NOTE: The masses of the suspension device and the accelerometer cables are to be kept as lightweight as possible to minimize their effect on the test results.

__9. The 3.3 mm (0.13 inch) diameter holes located on either side of the dummy's head are equidistant within 2 mm from the impact surface. (572.152(c)(3)(i))
Record the right side distance_____
Record the left side distance _____

__10. The angle between the lower surface plane of the neck transducer mass simulator (910420-003) and the plane of the impact surface is 45 ± 1 degrees. (572.152(c)(3)(i))
Record the angle _____

__11. The impact surface is clean and dry and has a micro finish in the range of 203.2×10^{-6} mm (8 micro inches) to 2032.0×10^{-6} mm (80 micro inches) (RMS). (572.152(c)(4))
Record actual micro finish _____

__12. The impact surface is a flat horizontal steel plate 50.8 mm (2 inches) thick and 610 mm (24 inches) square. (572.152(c)(4))
Record thickness _____
Record width _____
Record length _____

__13. Drop the head assembly from a height of 376.0 ± 1.0 mm (14.8 inches ± 0.04 inches) by a means that ensures a smooth, instant release onto the impact surface. (572.152(b) & (572.152(c)(4))

__14. Complete the following table. (572.152(b)):

Parameter	Specification	Result
Peak resultant acceleration	100 g ≤ x ≤ 120 g	
Resultant versus time history curve	Unimodal	
Oscillations after the main pulse	Less than 17% of the peak resultant acceleration	
Lateral acceleration	y-axis acceleration ≤ ±15 g	

__15. Plots of the x, y, z, and resultant acceleration data follow this sheet.

_____ _____
Signature Date

FRONTAL HEAD DROP TEST SET-UP SPECIFICATIONS

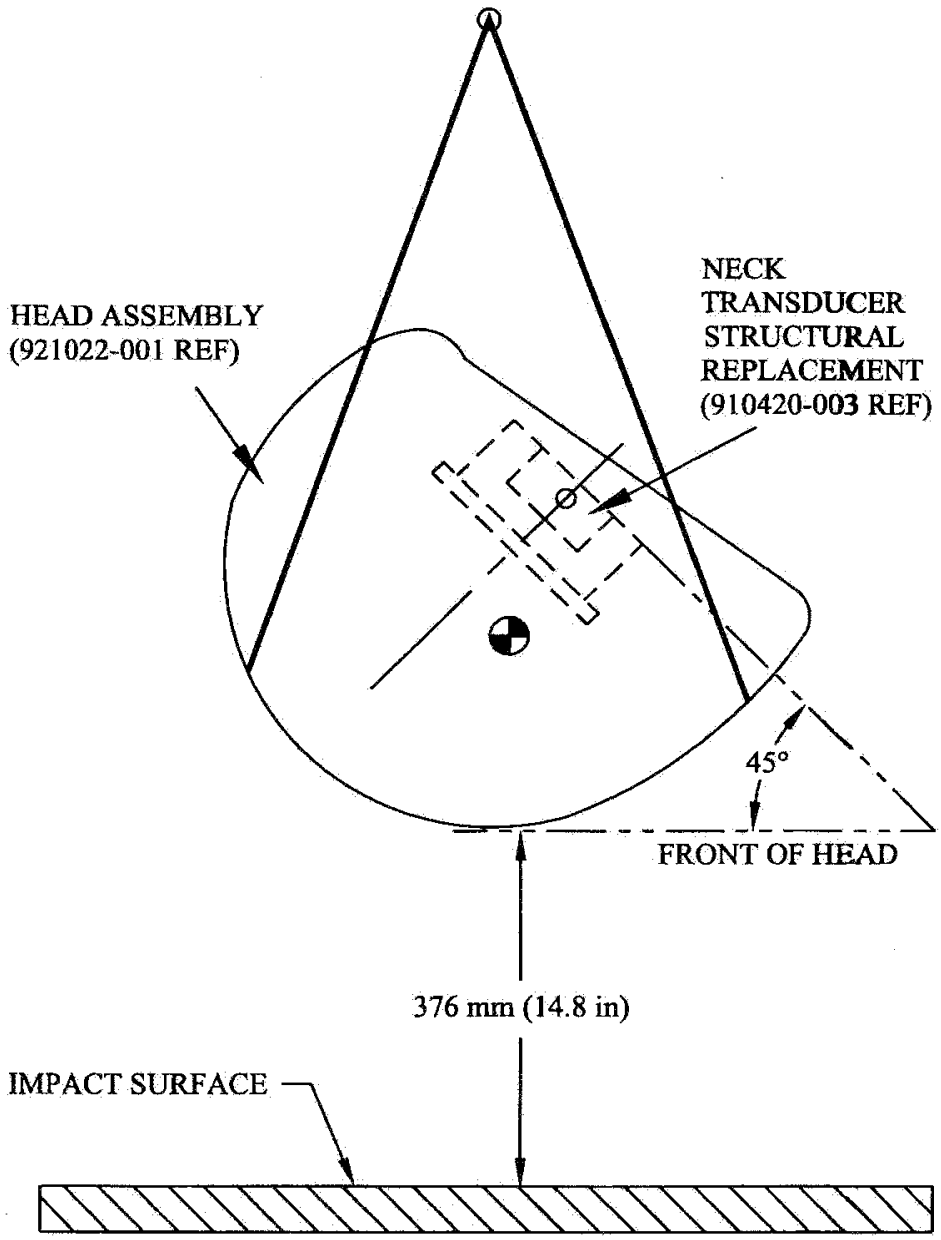

FIGURE 5E

DATA SHEET E4
REAR HEAD DROP TEST (572.152) (12-MONTH-OLD)

Dummy Serial Number _____ Test Date _____

Technician _____

__Pretest calibration
__Post test calibration verification

Test attempt no. ____ (when successive head drops are necessary)

__1. It has been at least 2 hours since the last rear head drop and at least 30 minutes since the last frontal head drop. (572.152(c)(5))
__ N/A, ONLY one head drop performed

__2. The head assembly consists of the head (921022-001), triaxial accelerometer mounting block (SA572-S80), and three (3) accelerometers (SA572-S4). (572.152(a))

__3. Accelerometers and their respective mounts are smooth and clean.

__4. The data acquisition system, including transducers, conforms to the requirements of SAE Recommended Practice J211/1 MAR95. (572.155(i))

__5. The head assembly soaked at a temperature between 18.9°C (66°F) and 25.6°C (78°F) and at a relative humidity from 10% to 70% for a period of at least four (4) hours prior to a test. (572.152(c)(1))
Record the maximum temperature _____
Record the minimum temperature _____
Record the maximum humidity _____
Record the minimum humidity _____

__6. Visually inspect the head skin for cracks, cuts, abrasions, etc. Repair or replace the head if the damaged area is more than superficial. Note: If the damage resulted from the vehicle crash test in which the dummy was an occupant, the damaged area is to be documented with photography and the post test calibration verification testing completed before any replacement or repairs are made.
Record findings and actions: _____
_____
_____
_____
_____

__7. Clean the impact surface of the skin and the impact surface of the fixture with isopropyl alcohol, trichloroethane or equivalent prior to the test. (572.152(c)(2))

__8. Suspend and orient the head assembly as shown in Figure 6E. The lowest point on the back of the head is 376.0 ± 1.0 mm (14.8±0.04 inch) from the impact surface. (572.152(c)(3)(ii))
Record the actual distance _____

NOTE: The masses of the suspension device and the accelerometer cables are to be kept as lightweight as possible to minimize their effect on the test results.

__9. The 3.3 mm (0.13 inch) diameter holes located on either side of the dummy's head are equidistance within 2 mm from the impact surface. (572.152(c)(3)(ii))
Record the right side distance_____
Record the left side distance _____

__10. The angle between the lower surface plane of the neck transducer mass simulator (910420-003) and the plane of the impact surface is 90 ± 1 degrees. (572.152(c)(3)(ii))
Record the angle _____

__11. The impact surface is clean and dry and has a micro finish in the range of 203.2×10^{-6} mm (8 micro inches) to 2032.0×10^{-6} mm (80 micro inches) (RMS). (572.152(c)(4))
Record actual micro finish _____

__12. The impact surface is a flat horizontal steel plate 50.8 mm (2 inches) thick and 610 mm (24 inches) square. (572.152(c)(4))
Record thickness _____
Record width _____
Record length _____

__13. Drop the head assembly from a height of 376.0 ± 1.0 mm (14.8 inches ± 0.04 inches) by a means that ensures a smooth, instant release onto the impact surface. (572.152(b) & (572.152(c)(4))

__14. Complete the following table. (572.152(b)):

Parameter	Specification	Result
Peak resultant acceleration	55 g ≤ x ≤ 71 g	
Resultant versus time history curve	Unimodal	
Oscillations after the main pulse	Less than 17% of the peak resultant acceleration	
Lateral acceleration	y-axis acceleration ≤ ±15 g	

__15. Plots of the x, y, z, and resultant acceleration data follow this sheet.

_____ _____
Signature Date

REAR HEAD DROP TEST SET-UP SPECIFICATIONS

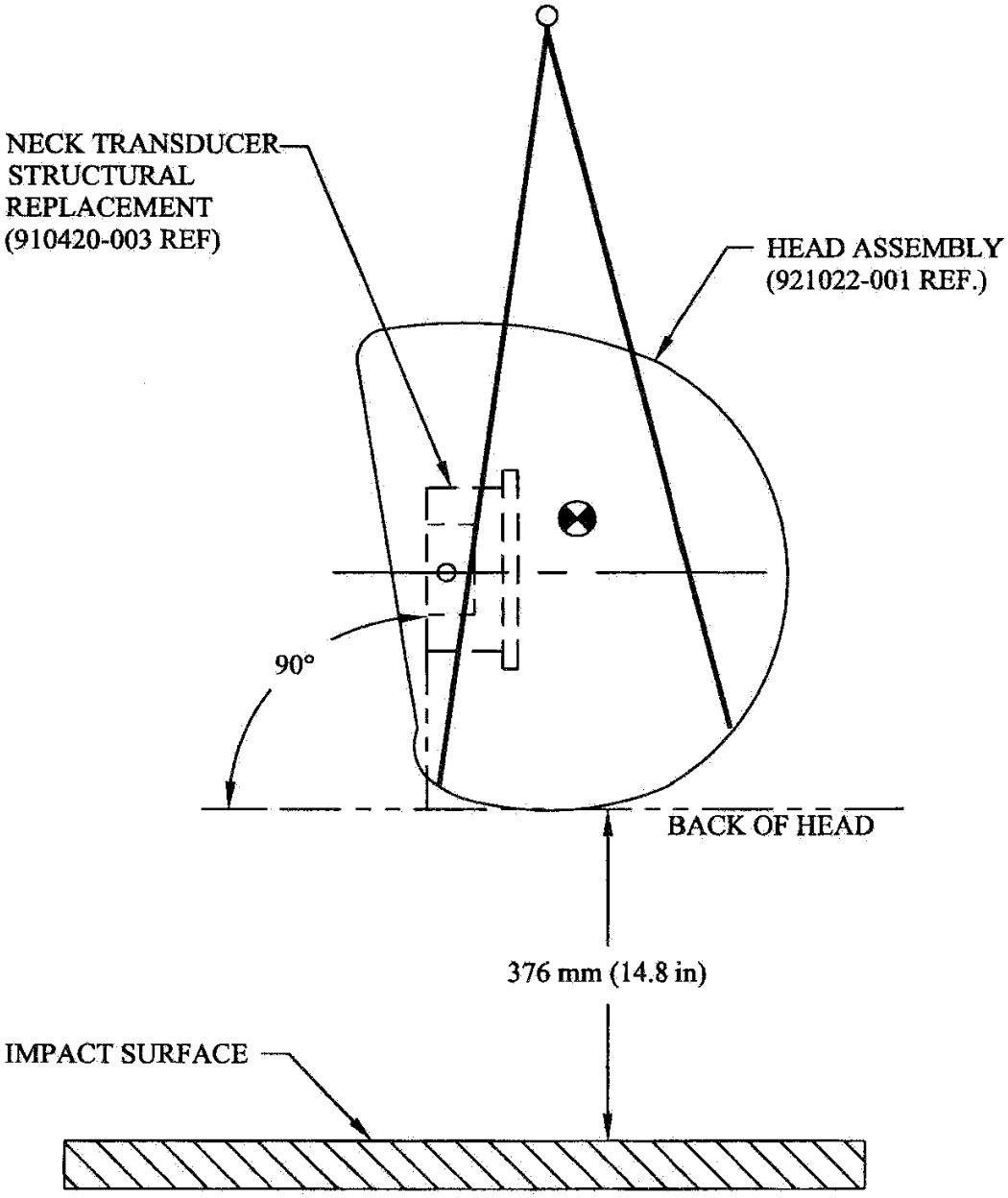

FIGURE 6E

DATA SHEET E5
NECK FLEXION TEST (572.153) (12-MONTH-OLD)

Dummy Serial Number _____ Test Date _____

Technician _____

__Pretest calibration
__Post test calibration verification

Test attempt no. ____ (when successive flexion tests are necessary)

__1. It has been at least 30 minutes since the last neck test. (572.155(m))
__ N/A, this is the first neck test performed

__2. The components required for the neck tests include the neck assembly (921022-041), and headform (TE-3200-160). (572.153(a))

__3. The assembly soaked at a temperature between 20.6°C (69°F) and 22.2°C (72°F) and at a relative humidity from 10% to 70% for a period of at least four (4) hours prior to a test. (572.153(c)(1))
Record the maximum temperature _____
Record the minimum temperature _____
Record the maximum humidity _____
Record the minimum humidity _____

__4. Visually inspect neck assembly for cracks, cuts and separation of the rubber from the metal segments. Note: If the damage resulted from the vehicle crash test, the damaged area is to be documented with photography and the post test calibration verification testing completed before any replacement or repairs are made.
Record findings and actions: _____
_____
_____
_____
_____

__6, Torque the jam nut (9001336) on the neck cable (ATD-6206) between 0.2 Nm and 0.3 Nm. (572.153(c)(2)

__7. The data acquisition system, including transducers, conforms to the requirements of SAE Recommended Practice J211/1 MAR95. (572.155(i))

__8. The test fixture pendulum conforms to the specifications in Figure 7E.

__9. The head-neck assembly is mounted on the pendulum so the midsagittal plane of the headform is vertical and coincides with the plane of motion of the pendulum as shown in Figure 8E for the flexion test. (572.153(c)(3))

__10. Install the transducers or other devices for measuring the "D" plane rotation with respect to the pendulum longitudinal centerline. Note: Plane "D" is the top horizontal surface of the neck load cell. These measurement devices should be designed to minimize their influence upon the performance of the head-neck assembly and not induce neck torsion. (572.153(c)(3)(ii))

__11. Plane D is perpendicular ± 1 degree to the centerline of the pendulum.

__12. Set the instrumentation so that the moment and rotation are defined to be zero when the longitudinal centerline of the neck and pendulum are parallel. (572.153(c)(3)(i))

__13. Release the pendulum and allow it to fall freely from a height to achieve an impact speed of 5.1 m/s to 5.3 m/s as measured at the center of the pendulum accelerometer at the instant of contact with the honeycomb. (572.153(c)(4))

__14. Complete the following table:

Neck Flexion Test Results (572.143(b)(1) & (572.153(c)(4)(ii)

Parameter		Specification	Result
Pendulum impact speed		5.1 m/s ≤ speed ≤ 5.3 m/s	
Pendulum ΔV with respect to impact speed	@ 10ms	1.6 m/s ≤ ΔV ≤ 2.3 m/s	
	@ 20 ms	3.4 m/s ≤ ΔV ≤ 4.2 m/s	
	@25ms	4.3 m/s ≤ ΔV ≤ 5.2 m/s	
Plane D Rotation		Peak moment* 36 Nm ≤ moment ≤ 45 Nm during the following rotation range 75° ≤ angle ≤ 86°	____Nm @ ___degrees
Positive Moment Decay** (Flexion)		Time to decay to 5Nm 60 ms ≤ time ≤ 80ms	

*Moment about the occipital condyle = M_y – (0.005842 m x F_x) (572.153(b)(1)(iii)

My = Moment in Nm measured by the transducer

Fx = Force, in N measured by the transducer

**Time zero is defined as the time of initial contact between the pendulum striker plate and the honeycomb material. (572.153(c)(4)(i))

__15. Plots of pendulum acceleration, pendulum velocity, neck y-axis moment, and neck rotation about the y-axis follow this sheet.

_____ _____

Signature Date

DATA SHEET E6
NECK EXTENSION TEST (572.153) (12-MONTH-OLD)

Dummy Serial Number _____ Test Date _____

Technician _____

__Pretest calibration
__Post test calibration verification

Test attempt no. ____ (when successive flexion tests are necessary)

__1. It has been at least 30 minutes since the last neck test. (572.155(m))
__ N/A, this is the first neck test performed

__2. The components required for the neck tests include the neck assembly (921022-041), and headform (TE-3200-160). (572.153(a))

__3. The assembly soaked at a temperature between 20.6°C (69°F) and 22.2°C (72°F) and at a relative humidity from 10% to 70% for a period of at least four (4) hours prior to a test. (572.153(c)(1))
Record the maximum temperature _____
Record the minimum temperature _____
Record the maximum humidity _____
Record the minimum humidity _____

__4. Visually inspect neck assembly for cracks, cuts and separation of the rubber from the metal segments. Note: If the damage resulted from the vehicle crash test, the damaged area is to be documented with photography and the post test calibration verification testing completed before any replacement or repairs are made.
Record findings and actions: _____
_____
_____
_____
_____

__6, Torque the jam nut (9001336) on the neck cable (ATD-6206) between 0.2 Nm and 0.3 Nm. (572.153(c)(2)

__7. The data acquisition system, including transducers, conforms to the requirements of SAE Recommended Practice J211/1 MAR95. (572.155(i))

__8. The test fixture pendulum conforms to the specifications in Figure 7E.

__9. The head-neck assembly is mounted on the pendulum so the midsagittal plane of the headform is vertical and coincides with the plane of motion of the pendulum as shown in Figure 9E for the flexion test. (572.153(c)(3))

__10. Install the transducers or other devices for measuring the "D" plane rotation with respect to the pendulum longitudinal centerline. Note: Plane "D" is the top horizontal surface of the neck load cell. These measurement devices should be designed to minimize their influence upon the performance of the head-neck assembly and not induce neck torsion. (572.153(c)(3)(ii))

__11. Plane D is perpendicular ± 1 degree to the centerline of the pendulum.

__12. Set the instrumentation so that the moment and rotation are defined to be zero when the longitudinal centerline of the neck and pendulum are parallel. (572.153(c)(3)(i))

__13. Release the pendulum and allow it to fall freely from a height to achieve an impact speed of 2.4 m/s to 2.6 m/s as measured at the center of the pendulum accelerometer at the instant of contact with the honeycomb. (572.153(c)(4))

__14. Complete the following table:

Neck Extension Results (572.143(b)(1) & (572.153(c)(4)(ii)

Parameter		Specification	Result
Pendulum impact speed		2.4 m/s ≤ speed ≤ 2.6 m/s	
Pendulum ΔV with respect to impact speed	@ 6 ms	0.8 m/s ≤ ΔV ≤ 1.2 m/s	
	@ 10 ms	1.5 m/s ≤ ΔV ≤ 2.1 m/s	
	@ 14 ms	2.2 m/s ≤ ΔV ≤ 2.9 m/s	
Plane D Rotation		Peak moment* -12 Nm ≤ moment ≤ -23 Nm during the following rotation range 80° ≤ angle ≤ 92°	____Nm @ ___degrees
Negative Moment Decay** (Extension)		Time to decay to -5Nm 76 ms ≤ time ≤ 90ms	

*Moment about the occipital condyle = M_y – (0.005842 m x F_x) (572.153(b)(2)(iii)

My = Moment in Nm measured by the transducer

Fx = Force, in N measured by the transducer

**Time zero is defined as the time of initial contact between the pendulum striker plate and the honeycomb material. (572.153(c)(4)(i))

__15. Plots of pendulum acceleration, pendulum velocity, neck y-axis moment, and neck rotation about the y-axis follow this sheet.

_____ _____

Signature Date

PENDULUM SPECIFICATIONS

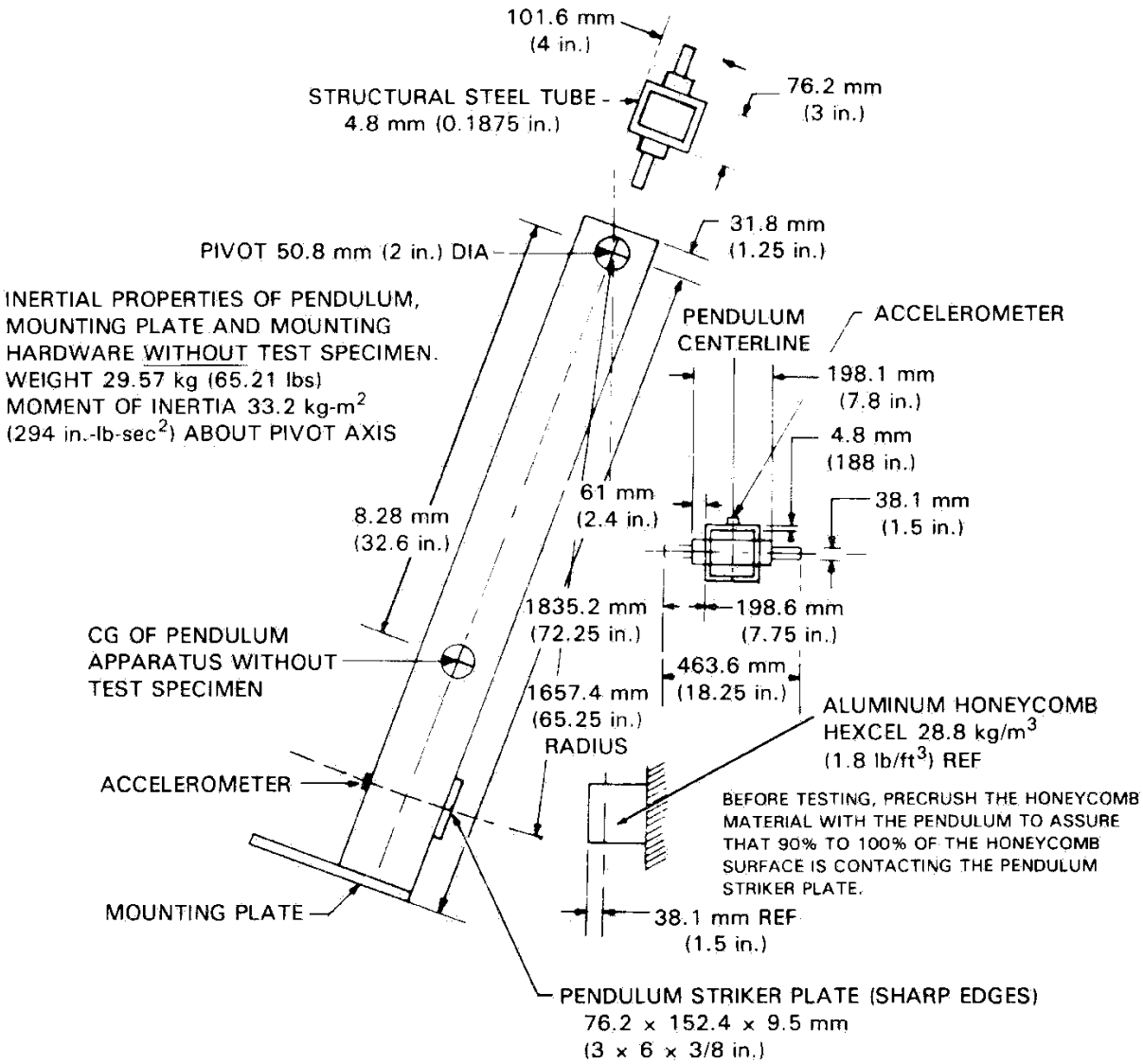

FIGURE 7E

NECK FLEXION TEST SET-UP SPECIFICATIONS

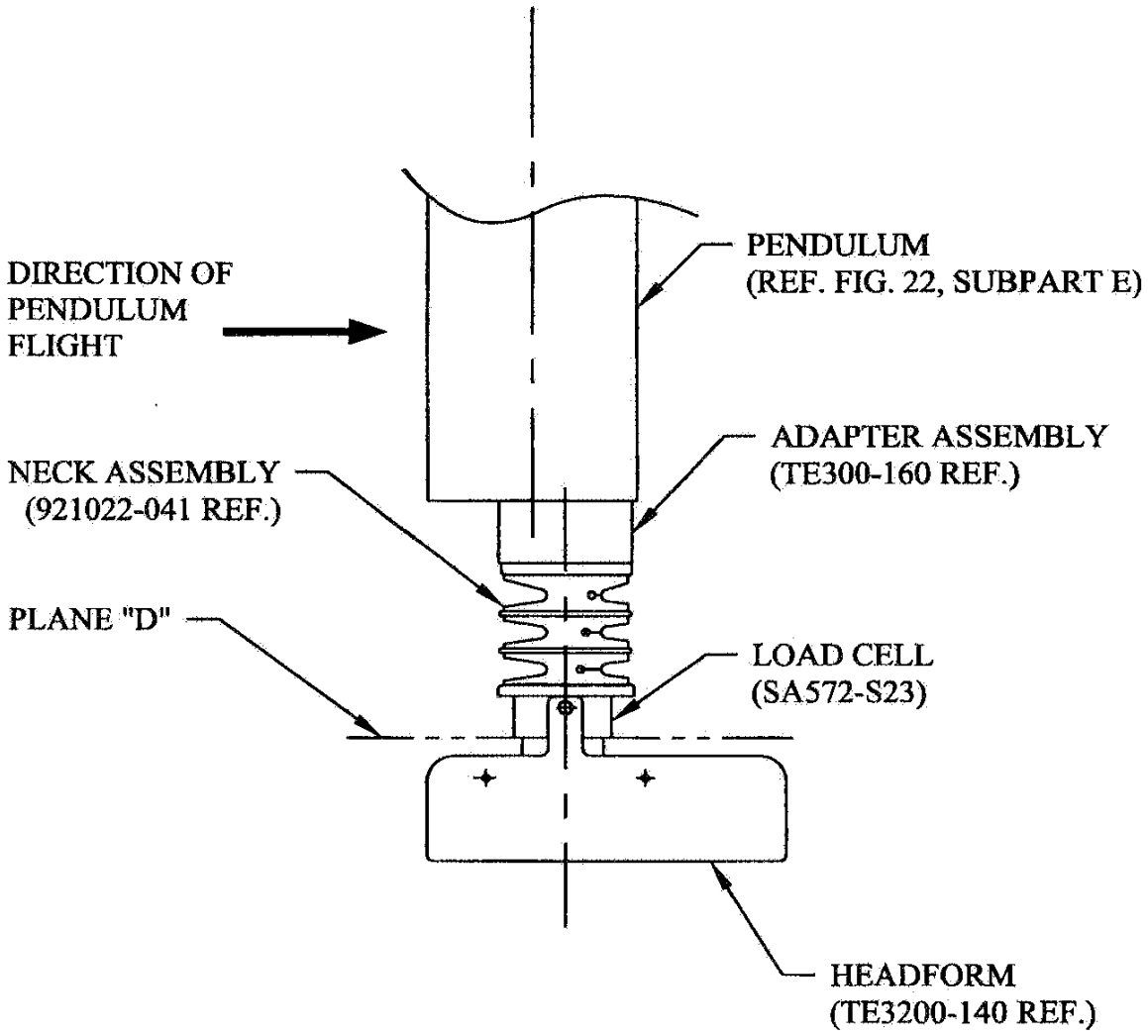

NOTE: MOUNT NECK AT LEADING EDGE OF PENDULUM TO AVOID INTERFERENCE.

FIGURE 8E

NECK EXTENSION TEST SET-UP SPECIFICATIONS

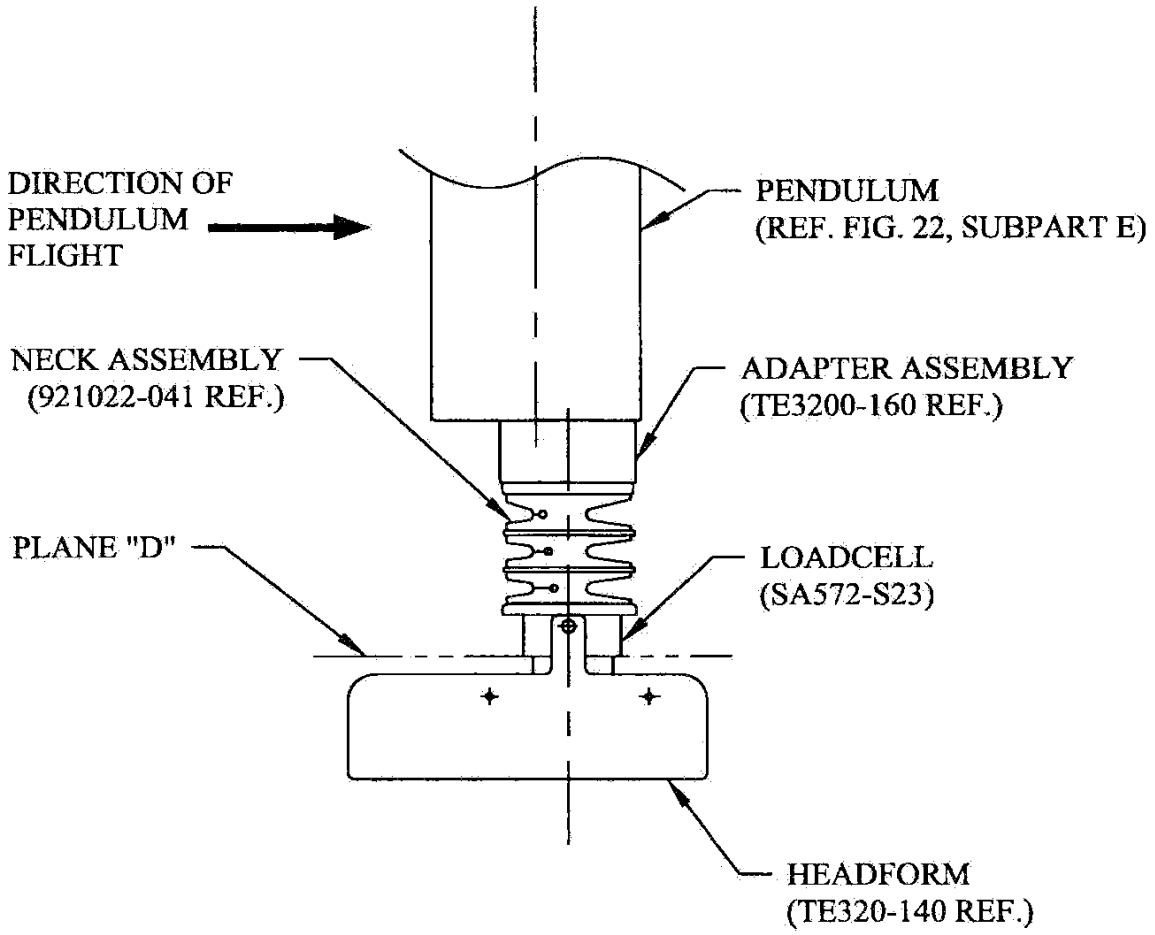

NOTE: MOUNT NECK AT LEADING EDGE OF PENDULUM TO AVOID INTERFERENCE.

FIGURE 9E

DATA SHEET E7
THORAX IMPACT TEST (572.154) (12-MONTH-OLD)

Dummy Serial Number _____ Test Date _____

Technician _____

__Pretest calibration
__Post test calibration verification

Test attempt no. ____ (when successive thorax impact tests are necessary)

__1. It has been at least 30 minutes since the last thorax impact test. (572.155(m))
__ N/A, ONLY one thorax impact test performed
__2. The test fixture conforms to the specifications in Figure 10E.
__3. The complete assembled dummy (921022-000) is used (572.154(b)) and is dressed in cotton-polyester-based tight-fitting long-sleeved sweat shirt and ankle length pants. The weight of the shirt and pants shall not exceed 0.25 kg. (572.154(c)(2))
__4. The dummy assembly soaked at a temperature between 20.6°C (69ºF) and 22.2°C (72ºF) and at a relative humidity from 10% to 70% for a period of at least four (4) hours prior to this test. (572.154(c)(1))
Record the maximum temperature _____
Record the minimum temperature _____
Record the maximum humidity _____
Record the minimum humidity _____
__5. Seat the dummy, without back support on the test fixture surface as shown in Figure 10E. The legs are extended forward, parallel to the midsagittal plane. The surface must be long enough to support the pelvis and outstretched legs. (572.154(c)(3))
__6. The midsagittal plane of the dummy is vertical within ± 1º. (572.154(c)(3))
__7. The posterior surface of the upper spine box is 90º ± 1º from the horizontal. Shim material may be used under the upper legs to maintain the dummy's specified spine box surface alignment. (572.154(c)(3))
__8. Place the upper arms parallel to the torso. Place the lower arms 0º to 5º forward of vertical. (572.154(c)(3))
__9. The longitudinal centerline of the test probe is centered within ±2.5 mm of the midsagittal plane, 196 ± 2.5 mm vertically from the plane of the seating surface and is within ±0.5º of a horizontal line in the dummy's midsagittal plane. (572.154(c)(4))
__10. The data acquisition system, including transducers, must conform to the requirements of SAE Recommended Practice J211/1 MAR95 (572.146(l)).
__11. Impact the anterior surface of the thorax with the test probe so the longitudinal centerline of the probe is within 2º of a horizontal line in the dummy's midsagittal plane at the moment of impact. (572.154(c)(5)) The velocity of the test probe at the time of impact is between 4.9 m/s and 5.1 m/s. (572.154(b)) The probe is guided so there is no significant lateral, vertical or rotational movement during the impact. (572.154(c)(6) Neither the suspension hardware, suspension cables, nor other attachments to the probe, including the velocity vane, make contact with the dummy. (572.154(c)(7)

__12. Complete the following table:

Thorax Impact Results (572.154(b))

Parameter*	Specification	Result
Test Probe Speed	4.9 m/s ≤ speed ≤ 5.1 m/s	
Peak force**	1514 N ≤ peak force ≤ 1796 N	

*Time zero is defined as the time of initial contact between the test probe and the chest skin.
**Force = impactor mass x acceleration (572.144(b)(3))

__13. Plots of pendulum acceleration, and pendulum force, follow this sheet.

_____ _____
Signature Date

THORAX IMPACT TEST SET-UP SPECIFICATIONS

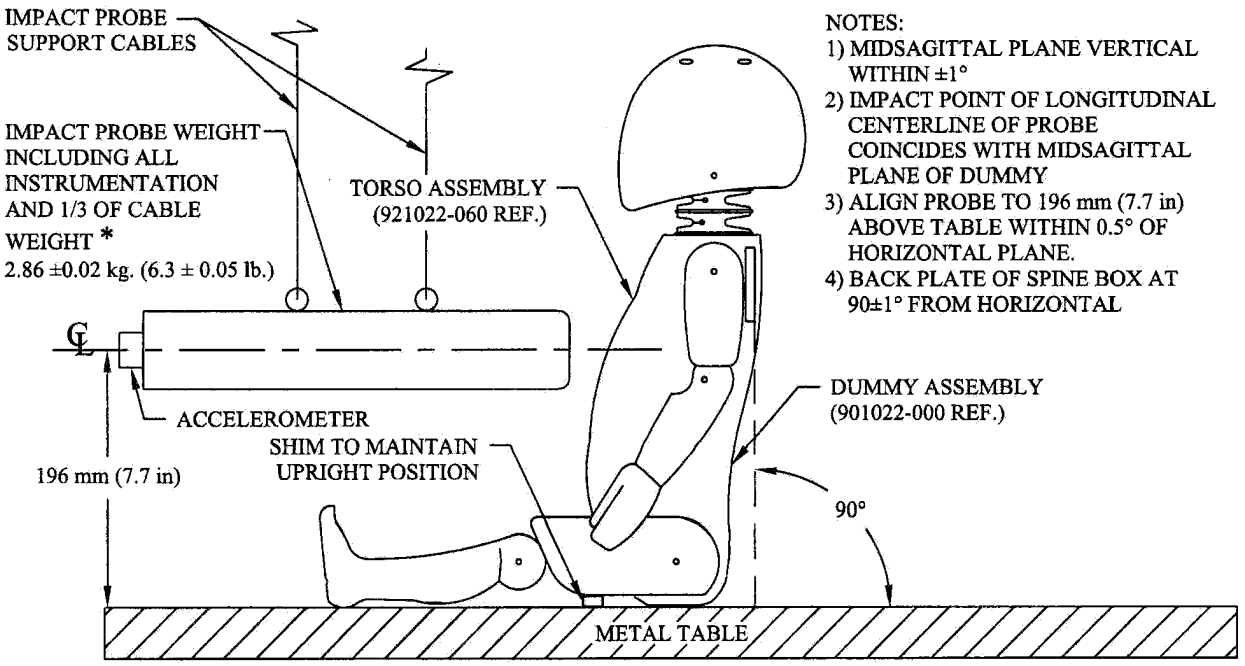

* 1/3 OF CABLE WEIGHT NOT TO EXCEED 5% OF THE TOTAL IMPACT PROBE WEIGHT.

Probe specifications:

1. Rigid metallic construction and concentric about its longitudinal axis.
2. A mass of 2.86 ± 0.02 kg (6.3 ± 0.05 lbs). 1/3 of the weight of the suspension cables and their attachments to the impact probe are included in the calculation of mass, and such components may not exceed 5 percent of the total weight of the test probe.
3. Minimum mass moment of inertia of 164 kg-cm^2 (0.145 lbs-in-sec^2) in yaw and pitch about the center of gravity.
4. The impacting end of the probe is perpendicular to and concentric with the longitudinal axis. It has a flat, continuous, and non-deformable face with diameter of 101.6 ± 0.25 mm (4.00 ± 0.01 in) and a edge radius of 7.6 to 12.7 mm (0.3 to 0.5 in.).
5. A 101-103 mm (4.0-4.1 in) diameter cylinder surface extends at least 12.5 mm to the rear of the impact face.
6. The probe's end opposite to the impact face must have provisions for mounting of an accelerometer with its sensitive axis collinear with the longitudinal axis of the probe.
7. The impact probe shall have a free air resonant frequency of not less than 1000 Hz in line with the longitudinal axis of the impactor.

FIGURE 10E

DATA SHEET E8

PART 572 INSTRUMENTATION CALIBRATION INFORMATION

I.D. NO.	MANUFACTURER	MODEL NO.	SERIAL NO.	DATE OF LAST CALIBRATION	DATE OF NEXT CALIBRATION
DUMMY INSTRUMENTATION					
HEAD ACCELEROMETERS					
(1) LONGITUDINAL					
(2) LATERAL					
(3) VERTICAL					
NECK TRANSDUCER					
CHEST ACCELEROMETERS					
(1) LONGITUDINAL					
(2) LATERAL					
(3) VERTICAL					
CHEST POTENTIOMETER					
FEMUR LOAD CELLS					
(1) RIGHT FEMUR					
(2) LEFT FEMUR					
LABORATORY INSTRUMENTATION					
NECK PENDULUM ACCELEROMETER					
THORAX PENDULUM ACCELEROMETER					
KNEE PENDULUM ACCELEROMETER					
NECK ROTATION TRANSDUCER 1 (OPTIONAL)					
NECK ROTATION TRANSDUCER 2 (OPTIONAL)					

LABORATORY TECHNICIAN: _____

APPENDIX F

DRIVER AND PASSENGER DUMMY SEATING
& POSITIONING PROCEDURES

DATA SHEET 1
Seating and Dummy Positioning Procedures for the 50th Male Driver Dummy
(Part 572, Subpart E, all section references refer to FMVSS No. 208)

__1. Position the seat's adjustable lumbar supports so that the lumbar support is in its lowest, retracted or deflated adjustment position. (S8.1.3)
__N/A – No lumbar adjustment

__2. Position any adjustable parts of the seat that provide additional support so that they are in the lowest or most open adjustment position. (S16.2.10.2)
__ N/A – No additional support adjustment

__3. Use all the seat controls that have any affect on the fore-aft movement of the seat to move the seat cushion to the rearmost position. **Mark** this position. (8/31/95 legal interp to Hogan and Hartson)

__4. Use all the seat controls that have any affect on the fore-aft movement of the seat to move the seat cushion to the foremost position. **Mark** this position. (8/31/95 legal interp to Hogan and Hartson)

__5. **Mark** each fore-aft position so that there is a visual indication when the seat is at a particular position. For manual seats, **mark** each detent. For power seats, **mark** only the rearmost, middle, and foremost positions. Label three of the positions with the following: F for foremost, M for mid-position (if there is no mid-position, label the closest adjustment position to the rear of the mid-point), and R for rearmost. Determine the mid fore-aft seat position based on the foremost and rearmost positions determined in items 3 and 4. (8/31/95 legal interp to Hogan and Hartson)

__6. Move the seat to the mid position.

__7. While maintaining the mid position, move the seat to its lowest position. **Mark** the height position. For seats with adjustable seat cushions, use the manufacturer's recommended seat cushion angle for determining the lowest height position.
__N/A- No cushion angle adjustment
Manufacturers seat cushion angle _____
Tested seat cushion angle _____

__8. Visually **mark** the seat back angle, if adjustable, at the manufacturer's nominal design riding position for a **50th percentile adult male** in the manner specified by the manufacturer.
__ N/A – No seat back angle adjustment
Manufacturer's design seat back angle _____
Tested seat back angle _____

__9. Is the seat a bucket seat?
__Yes, go to 10 and skip 11
__No, go to 11 and skip 10

__10. Bucket seats:
Locate and **mark** the longitudinal centerline of the seat cushion. The intersection of the vertical longitudinal plane that passes through the SgRP and the seat cushion upper surface determines the longitudinal centerline of a bucket seat cushion. (S10.4.1.2 and S16.3.1.10)

__11. Bench seats:
Locate and **mark** the longitudinal line on the seat cushion that marks the intersection of the vertical longitudinal plane through the centerline of the steering wheel and the seat cushion upper surface. (S10.4.1.1)

__12. If adjustable, set the head restraint at the full up position. (S8.1.3) If there are adjustments other than vertical, adjust them as recommended by the manufacturer.
__N/A – No head restraint adjustment

__13. Place any adjustable seat belt anchorages at the vehicle manufacturer's nominal design position for a 50th percentile adult male occupant (S8.1.3)
__N/A – No adjustable upper seat belt anchorage
Manufacturer's specified anchorage position. _____
Tested anchorage position _____

__14. Place adjustable pedals in the full forward position.
__N/A – the pedals are not adjustable.

__15. Is the steering wheel adjustable up and down and/or in and out?
__Yes – go to 16
__No – go to 19

__16. Find and **mark** each up and down position. Label three of the positions with the following: H for highest, M for mid-position (if there is no mid-position, label the next lowest adjustment position), and L for lowest.
__N/A – steering wheel is not adjustable up and down

__17. Find and **mark** each in and out position. Label three of the positions with the following: F for foremost, M for mid-position (if there is no mid-position, label the next rearmost adjustment position), and R for rearmost.
__N/A – steering wheel is not adjustable in and out.

__18. Set the steering wheel hub at the geometric center of the full range of driving positions including any telescoping positions.

__19. Place the dummy in the seat such that the midsagittal plane is coincident with the longitudinal seat cushion markings as determined in item 10 or 11 and the upper torso rests against the seat back. (S10.4.1.1 & S10.4.1.2)

__20. Rest the thighs on the seat cushion. (S10.5)

__21. Position the H-point of the dummy within 0.5 inch of the vertical dimension and 0.5 inch of the horizontal dimension of a point 0.25 inch below the H-point determined using the SAE J826 H-point machine. (S10.4.2.1) Then measure the pelvic angle with respect to the horizontal using the pelvic angle gage. Adjust the dummy position until these three measurements are within the specifications. (S10.4.2.1 and S10.4.2.2)

____horizontal inches from the point 0.25 below the determined H-point (0.5 inch max.) (S10.4.2.1)

____vertical inches from the point 0.25 below the determined H-point (0.5 inch max.) (S10.4.2.1)

____pelvic angle (20º to 25º)

__22. Is the head level within ± 0.5º? (S10.1)

__Yes, go to 23

__No, go to 22.1

__22.1 Adjust the position of the H-point. (S10.1)

__22.2 Is the head level within ± 0.5º? (S10.1)

__Yes, record the following, then go to 23. __No, go to 22.3

____horizontal inches from the point 0.25 below the determined H-point (0.5 inch max.) (S10.4.2.1)

____vertical inches from the point 0.25 below the determined H-point (0.5 inch max.)(S10.4.2.1)

____pelvic angle (20º to 25 º) (S10.4.2.2)

__22.3 Adjust the pelvic angle. (S10.1)

__22.4 Is the head level within ± 0.5 º? (S10.1)

__Yes, record the following, then go to 23. __No, go to 22.5

____horizontal inches from the point 0.25 below the determined H-point (0.5 inch max.) (S10.4.2.1)

____vertical inches from the point 0.25 below the determined H-point (0.5 inch max.) (S10.4.2.1)

____pelvic angle (20º to 25º) (S10.4.2.2)

__22.5 Adjust the neck bracket of the dummy the minimum amount necessary from the nonadjusted “0” setting until the head is level within ± 0.5 º. (S10.1)
Record the following, then go to 23

____horizontal inches from the point 0.25 below the determined H-point (0.5 inch max.) (S10.4.2.1)

____vertical inches from the point 0.25 below the determined H-point (0.5 inch max.) (S10.4.2.1)

____pelvic angle (20º to 25º) (S10.4.2.2)

__23. Set the distance between the outboard knee clevis flange surfaces at 10.6 inches.

__measured distance (10.6 inches) (S10.5)

__24. Can the right foot be placed on the accelerator?

__Yes, go to 24.1 and skip 24.2

__No, go to 24.2

__24.1. To the extent practicable keep the right thigh and the leg in a vertical plane (S10.5) while resting the foot on the undepressed accelerator pedal with the rearmost point of the heel on the floor pan in the plane of the pedal. (S10.6.1.1)

__24.2 Initially set the foot perpendicular to the leg and then place it as far forward as possible in the direction of the pedal centerline with the rearmost point of the heel resting on the floor pan. (S10.6.1.1)

__24.2.1 Move the adjustable pedal to its most rearward position or until the right foot is flat on the pedal, whichever occurs first. (S10.6.1.1)

__N/A – the accelerator pedal is not adjustable

__25. Does the vehicle have a foot rest?

__Yes, go to 25.1

__No, go to 25.2

__25.1 With the left thigh and leg in a vertical plane, place the left foot on the foot rest with the heel resting on the floor pan. (S10.6.1.2)

__25.1.1 Is the left foot elevated above the right foot?

__Yes, go to 25.2 and position the foot off the foot rest

__No, go to 26

__25.2 Check the ONLY one of the following that applies

__The left foot reaches the toeboard without adjusting the foot or leg. To the extent practicable keep the left thigh and the leg in a vertical longitudinal plane (S10.5) and place the foot on the toeboard, skip 25.3 (S10.6.1.2)

__The left foot reaches the toeboard but contacts the brake or clutch pedal and must be rotated to avoid pedal contact. To the extent practicable keep the left thigh and the leg in a vertical longitudinal plane (S10.5) and place the foot on the toeboard. The foot was rotated about the leg to avoid pedal contact, skip 25.3 (S10.6.1.2)

__The left foot reaches the toeboard but contacts the brake or clutch pedal and the foot and leg must be rotated to avoid pedal contact. To the extent practicable keep the left thigh and the leg in a vertical longitudinal plane (S10.5) and place the foot on the toeboard. The foot was rotated about the leg and the leg was rotated outboard about the hip the minimum distance necessary to avoid pedal contact, skip 12.3 (S10.6.1.2)

__N/A – the foot does not reach the toeboard, go to 25.3

__25.3 Check the ONLY one of the following that applies

__The left foot did not contact the brake or clutch pedal. To the extent practicable keep the left thigh and the leg in a vertical longitudinal plane (S10.5). Set the foot perpendicular to the leg and place it as far forward as possible with the heel resting on the floor pan. (S10.6.1.2)

__The left foot did contact the brake or clutch pedal and the foot was rotated to avoid contact. To the extent practicable keep the left thigh and the leg in a vertical longitudinal plane (S10.5). Set the foot perpendicular to the leg and place it as far forward as possible with the heel resting on the floor pan and rotate the foot the minimum amount to avoid pedal contact. (S10.6.1.2)

__The left foot did contact the brake or clutch pedal and the foot was rotated about the leg and the leg was rotated outboard about the hip the minimum distance necessary to

avoid pedal contact. Set the foot perpendicular to the leg and place it as far forward as possible with the heel resting on the floor pan and rotate the foot about the leg and the thigh and leg outboard about the hip the minimum distance necessary to avoid pedal contact. (S10.6.1.2)

__26. Place the right upper arm adjacent to the torso with the centerline as close to a vertical plane as possible. (S10.2.1)

__27. Fasten the seat belt around the dummy.
__27.1 Remove all slack from the lap belt portion. (S10.9)
__27.2 Pull the upper torso webbing out of the retractor and allow it to retract; repeat this four times. (S10.9)
__27.3 Apply a 2 to 4 pound tension load to the lap belt. (S10.9)
____pound load applied
__27.4 Is the belt system equipped with a tension-relieving device?
__Yes, continue
__No, go to 28
__27.5 Introduce the maximum amount of slack into the upper torso belt that is recommended by the vehicle manufacturer in the vehicle owner's manual. (S10.9).

__28. Place the left upper arm adjacent to the torso with the centerline as close to a vertical plane as possible. (S10.2.1)

__29. Place the right hand with the palm in contact with the steering wheel at the rim's horizontal centerline and with the thumb over the steering wheel. (S10.3.1)

__30. Place the left hand with the palm in contact with the steering wheel at the rim's horizontal centerline and with the thumb over the steering wheel. (S10.3.1)

__31. Tape the thumb of each hand to the steering wheel by using masking tape with a width of 0.25 inch. The length of the tape shall only be enough to go around the thumb and steering wheel one time.

DATA SHEET 2
Seating and Dummy Positioning Procedures for the 5th Female Passenger Dummy
(Part 572, Subpart O, all section references refer to FMVSS No. 208)

(Check this item ONLY if it applies to this vehicle.)
__The passenger seat adjustments are controlled by the adjustments made to the driver's seat. Therefore, positioning of the passenger dummy is made simultaneously with the driver dummy. Adjustments made to the seat to position the driver will over ride any adjustments that would normally be made to position the passenger. (S16.2.10.3)

1. Seat Position
__1.1 Position the seat's adjustable lumbar supports so that the lumbar supports are in the lowest, retracted or deflated adjustment positions. (S16.2.10.1, S20.1.9.1, S20.4.1, S22.1.7.1)
__ N/A – No lumbar adjustment
__1.2 Position any adjustable parts of the seat that provide additional support so that they are in the lowest or most open adjustment position. (S16.2.10.2, S20.1.9.2, S20.4.1, S22.1.7.1, S22.4.2.1, S22.4.3.1, S24.4.2.1, S26.2.3, S26.3.1)
__ N/A – No additional support adjustment
__1.3 Position an adjustable leg support system in its rearmost position. (8/27/04 interpretation to Toyota)
__N/A – No adjustable leg support system
__1.4 **Mark** a point (seat cushion reference point) on the side of the seat cushion that is between 150 mm and 250 mm from the front edge of the seat cushion. (S16.3.1.12)
__1.5 Draw a line (seat cushion reference line) through the seat cushion reference point. (S16.3.1.13)
__1.6 Use only the controls that primarily move the seat in the fore-aft direction to move the seat cushion reference point to the rearmost position. (S16.2.10.3.1, S22.1.7.3)
__1.7 If the seat cushion adjusts fore-aft, independent of the seat back, use only the controls that primarily move the seat cushion in the fore-aft direction to move the seat cushion reference point to the rearmost position. (S16.2.10.3.1, S20..1.9.3)
__ N/A – No independent fore-aft seat cushion adjustment
__1.8 Use any part of any control, other than the parts just used for fore-aft positioning, to determine the range of angles of the seat cushion reference line and to set the seat cushion reference line at the mid-angle. (S16.2.10.3.1)
Maximum angle _____
Minimum angle _____
Mid-angle _____
__1.9 If the seat and/or seat cushion height is adjustable, use any part of any control other than the parts which primarily move the seat or seat cushion fore-aft, to put the seat cushion reference point in its lowest position with the seat cushion reference line angle at the mid-angle found in 1.8. (S16.2.10.3.1)
__N/A – No seat height adjustment
__1.10 Use only the controls that primarily move the seat in the fore-aft direction to verify the seat is in the rearmost position.
__1.11 Use only the controls that primarily move the seat in the fore-aft direction to **mark** the

fore-aft seat positions. **Mark** each position so that there is a visual indication when the seat is at a particular position. For manual seats, move the seat forward one detent at a time and **mark** each detent. For power seats, **mark** only the rearmost, middle, and foremost positions. Label three of the positions with the following: F for foremost, M for mid-position (if there is no mid-position, label the closest adjustment position to the rear of the mid-point), and R for rearmost.

__1.12 Use only the controls that primarily move the seat in the fore-aft direction to place the seat in the rearmost position.

__1.13 Use any part of any control, other than the parts which primarily move the seat or seat cushion fore-aft, to find and visually **mark** the maximum, minimum, and middle height of the seat cushion reference point with the seat cushion reference line at the mid-angle determined in 1.8. (S20.1.9.4, S22.1.2, S22.1.7.4, S22.3.1, S22.4.3.1, S24.1.2, S24.3.1, S24.4.3.1, S26.2.3, S26.3.1)

__N/A – No seat height adjustment. Go to 1.18

__1.14 Use only the controls that primarily move the seat and/or seat cushion in the fore-aft direction to place the seat in the mid-fore-aft position.

__1.15 Use any part of any control, other than the parts which primarily move the seat or seat cushion fore-aft, to find and visually **mark** the maximum, minimum, and middle height of the seat cushion reference point with the seat cushion reference line at the mid-angle determined in 1.8. (S20.1.9.4, S22.1.2, S22.1.7.4, S22.3.1, S24.1.2, S24.3.1)

__1.16 Use only the controls that change the seat in the fore-aft direction to place the seat in the foremost position. (S16.2.10.3.2)

__1.17 Use any part of any control, other than the parts which primarily move the seat or seat cushion fore-aft, to find and visually **mark** the maximum, minimum, and middle height of the seat cushion reference point with the seat cushion reference line at the mid-angle determined in 1.8. (S16.2.10.3.3, S20.1.9.4, S22.1.2, S22.1.7.4, S22.3.1, S24.1.2, S24.3.1)

__1.18. Is the seat a bucket seat?

__Yes, go to 1.19 and skip 1.20

__No, go to 1.20 and skip 1.19

__1.19 Bucket seats:

Locate and **mark** for future reference the longitudinal centerline of the seat cushion. The intersection of the vertical longitudinal plane that passes through the SgRP and the seat cushion upper surface determines the longitudinal centerline of a bucket seat cushion. (S16.3.1.10 & S20.1.10)

__1.20 Bench seats:

Locate and **mark** the longitudinal centerline of the passenger seat cushion. The longitudinal centerline is the same distance from the longitudinal centerline of the vehicle as the center of the steering wheel. (S20.2.1.4, S22.2.1.3, S24.2.3, S20.4.4, S22.2.2.1(b), S22.2.2.3(b), S22.2.2.4(a), S22.2.2.5(a), S22.2.2.6(a), S22.2.2.7(a), S24.2.3(a))

Record the distance from the longitudinal centerline of the vehicle to the center of the steering wheel. _____

Record the distance from the longitudinal centerline of the vehicle to the longitudinal centerline of the seat cushion.) _____

2. Head Restraint Position

__N/A Vehicle contains automatic head restraints.

__N/A, there is no head restraint adjustment Go to 3

__2.1 Adjust the head restraint to its lowest position. (S16.2.10.2, S20.1.9.6 S20.4.1, S22.1.7.6, S22.4.2.1, S22.4.3.1, S24.4.3.1, S26.2.3, S26.3.1)

__2.2 All adjustments of the head restraint shall be used to position it full forward. For example, if it rotates, rotate it such that the head restraint extends as far forward as possible. **Mark** the foremost position. (S16.2.10.2 & S16.3.4.4 & S20.1.9.6, S20.4.1, S22.4.2.1, S22.4.3.1, S24.4.3.1, S26.2.3, S26.3.1)

__2.3 Measure the vertical distance from the top most point of the head restraint to the bottom most point. Locate and **mark** a horizontal plane through the midpoint of this distance. (S16.3.4.3)

Vertical height of head restraint ____ mm

Mid-point height ____ mm

__3. Place the SCRP in the full rearward, mid-height position, and mid-seat cushion angle. (S16.3.3.1.1)

__4. Fully recline the seat back. (S16.3.3.1.2)

__ N/A seat back not adjustable.

__5. Place the dummy in the seat with the legs at an angle of 120 degrees to the thighs. The calves should not be touching the seat cushion. (S16.3.3.1.2)

__6. Position the dummy in the seat such that the midsagittal plane is coincident with the longitudinal seat cushion marking that was determined in item 1.19 or 1.20. (S16.3.3.1.3 and S16.3.3.1.4)

__7. Hold down the dummy's thighs and push rearward on the upper torso to maximize the pelvic angle. (S16.3.3.1.5)

__8. Set the angle between the legs and the thighs to 120 degrees. (S16.3.3.1.6)

__9. Set the transverse distance between the centers of the front of the knees at 160 to 170 mm. (6.3 to 6.7 inches). Center the knee separation with respect to the longitudinal seat cushion marking that was determined item 1.19 or 1.20. (S16.3.3.1.6)

Record Knee Separation _____

__10. Push rearward on the dummy's knees until the pelvis contacts the seat back, or the backs of the calves contact the seat cushion, whichever occurs first. (S16.3.3.1.6)

__Pelvis contacted seat back.

__Calves contacted seat cushion.

__11. Gently rock the upper torso ± 5 degrees (approximately 51 mm (2 inches)) side-to-side three times. (S16.3.3.1.7)

__12. If needed, extend the legs until the feet do not contact the floor pan. The thighs should

be resting on the seat cushion. (S16.3.3.1.8)

__13. Use seat controls to line up the seat markings determined during the completion of item 1 to set the foremost fore-aft position, mid-height position and the seat cushion mid-angle. If the dummy contacts the interior move the seat rearward until a maximum clearance of 5 mm (0.2 inches) is achieved or the seat is in the closest detent position that does not cause dummy contact. (S16.3.3.1.8)

__Foremost, mid-height position and the seat cushion mid-angle reached
__Dummy contact. Clearance set at maximum of 5mm
Measured Clearance_____
__Dummy Contact. Seat set at nearest detent position.
Seat position ___ detent positions rearward of foremost (foremost is position zero)

__14. If the seat back is adjustable, rotate the seat back forward while holding the thighs in place. Continue rotating the seat back forward until the transverse instrument platform of the dummy head is level ± 0.5 degrees. If head cannot be leveled using the seat back adjustment, or the seat back is not adjustable, use the lower neck bracket adjustment to level the head. If a level position cannot be achieved, adjust the head as closely as possible to the ± 0.5 degree range. (S16.3.3.1.9 and S16.3.3.1.10)
(Check All That Apply)

__Seat back not adjustable
__Seat back not independent of driver side seat back
__Head Level Achieved. (Check all that apply)
__Head leveled using the adjustable seat back
__Head leveled using the neck bracket.
Head Angle _____ degrees
__Head Level NOT Achieved. (Check all that apply)
__ Head adjusted using the adjustable seat back
__ Head adjusted using the neck bracket.
Head Angle _____ degrees

__15. Verify the pelvis is not interfering with the seat bight. (S16.3.3.1.9)

__No interference
__Pelvis moved forward the minimum amount so that it is not caught in the seat bight.

__16. Verify the dummy abdomen is properly installed. (S16.3.3.1.9)

__Abdomen still seated properly into dummy
__Abdomen was adjusted because it was not seated properly into dummy

__17. Head Angle

__N/A, neither the pelvis nor the abdomen were adjusted.
__17.1 Head still level (Go to 16)
__17.2 Head level adjusted

__Head Level Achieved. (Check all that apply)

__Head leveled using the adjustable seat back
__Head leveled using the neck bracket.
Head Angle _____ degrees

__Head Level NOT Achieved. (Check all that apply)
__Head adjusted using the adjustable seat back
__Head adjusted using the neck bracket.
Head Angle _____ degrees

__18. Measure and set the pelvic angle using the pelvic angle gage TE-2504. The pelvic angle should be 20.0 degrees ± 2.5 degrees. If the pelvic angle cannot be set to the specified range because the head will not be level or because the dummy will have need major repositioning, adjust the pelvis as closely as possible to the angle range, but keep the head level.
__Pelvic angle set to 20.0 degrees ± 2.5 degrees.
__Pelvic angle of 20.0 degrees not achieved, the angular difference was minimized.
__Record the pelvic angle. _____ degrees

__19. Check the dummy for contact with the interior after completing adjustments.
__No contact.
__Dummy in contact with interior.
__Seat moved aft ___ mm from the previous position.
__Seat moved aft ___ detent positions from the previous position.

__20. Verify the transverse instrument platform of the dummy head is level +/- 0.5 degrees. Use the lower neck bracket adjustment to level the head. If a level position cannot be achieved, minimize the angle. (S16.3.3.1.9, S16.3.3.1.10, and S16.3.3.1.11)
__Head Level Achieved
Head Angle _____ degrees
__Head Level NOT Achieved.
Head Angle _____ degrees

__21. Check the dummy to see if additional interior clearance is obtained, allowing the seat to be moved forward. (S16.3.3.1.12)
__N/A Bench Seat
__N/A Seat already at full forward position.
__Clearance unchanged. No adjustments required.
__Additional clearance available
__Seat moved Forward ___ mm from the previous position.
__Seat moved Forward ___ detent positions from the previous position.
__Seat moved Forward, Full Forward position reached.

__22. Passenger foot positioning. (Indicate final position achieved) (S16.3.3.2)
__22.1 Place feet flat on the toe board; OR (S16.3.3.2.1)
__22.2 If the feet cannot be placed flat on the toe board, set the feet perpendicular to the lower leg, and rest the heel as far forward on the floor pan as possible; OR (S16.3.3.2.2)
__22.3 If the heels do not touch the floor pan, set the legs as perpendicular to the thighs as possible and set the feet parallel to the floor pan. (S16.3.3.2.2)

__23. Passenger arm/hand positioning. (S16.3.3.3)
__23.1 Place the dummy's upper arms adjacent to the torso with the arm centerlines as close to a vertical longitudinal plane as possible. (S16.3.3.3.1)
__23.2 Place the palms of the dummy in contact with the outer part of the thighs (S16.3.3.3.2)
__23.3 Place the little fingers in contact with the seat cushion. (S16.3.3.3.3)

__24. Adjustable head restraints (S16.3.4)
__N/A, there is no head restraint adjustment
__24.1 If the head restraint has an automatic adjustment, leave it where the system positions the restraint after the dummy is placed in the seat. (S16.3.4.1) Go to 25.
__24.2 Adjust each head restraint vertically so that the horizontal plane determined in item 2 is aligned with the center of gravity (CG) of the dummy head. (S16.3.4.3)
__24.3 If the above position is not attainable, move the vertical center of the head restraint to the closest detent below the center of the head CG. (S16.3.4.3)
__N/A midpoint position attained in previous step
__Headrest set at nearest detent below the head CG
__24.4 If the head restraint has a fore and aft adjustment, place the restraint in the foremost position or until contact with the head is made, whichever occurs first. (S16.3.4.4)

__25. Manual belt adjustment (for tests conducted with a belted dummy) S16.3.5
__N/A, Unbelted test
__25.1 If an adjustable seat belt D-ring anchorage exists, place it in the manufacturer's design position for a 5th percentile adult female. **This information will be supplied by the COTR.** (S16.3.5.1)
Manufacturer's specified position _____
_____
__25.2 Place the Type 2 manual belt around the test dummy and fasten the latch. (S16.3.5.2)
__25.3 Ensure that the dummy's head remains as level as possible. (S16.3.5.3)
__25.4 Remove all slack from the lap belt. Pull the upper torso webbing out of the retractor and allow it to retract; repeat this operation four times. Apply a 9 N (2 lbf) to 18 N (4 lbf) tension load to the lap belt. If the belt system is equipped with a tension-relieving device, introduce the maximum amount of slack into the upper torso belt that is recommended by the manufacturer. If the belt system is not equipped with a tension-relieving device, allow the excess webbing in the shoulder belt to be retracted by the retractive force of the retractor. (S16.3.5.4)

APPENDIX G
REDUNDANT ACCELEROMETERS –
RECOMMENDED PRACTICE

APPENDIX G
REDUNDANT HEAD, CHEST, AND FEMUR ACCELEROMETERS-
(RECOMMENDED PRACTICE)

The following guideline is intended to serve as an interim measure for use in affixing the redundant accelerometers in the head, chest, and femurs of the Hybrid III dummies. Standard procedures for obtaining redundant data are currently being developed. The contractor is expected to closely follow this guideline until such standard procedures are available. Contact the COTR if difficulty arises in meeting the guideline, or more details are needed.

1. The locations of the primary accelerometers, (head, chest, or femur) as specified in the test procedure, shall not be altered as a result of installing the redundant accelerometer set. In addition, the center of gravity (C.G.) of the head, chest, or femur with the redundant accelerometers installed shall stay within the allowable range as indicated in the Hybrid III specification.

2. The weight increase due to installation of the redundant accelerometers in the head, chest, or femur shall be within the allowable weight variation specified for these body regions in the Hybrid III drawing documentation.

3. To simplify and facilitate the installation, the following recommendations are provided:

A. Use of SAE572-S4 accelerometers and existing mounting fixtures is desirable because of their light weight.

B. Redundant SAE572-S4 accelerometers can be attached directly to the primary one, either head-to-head or back-to-back, and then attach both to one side of the mounting cube.

C. Use of spacers between the primary and redundant accelerometers is recommended for better stability. Spacers shall be made of aluminum due to weight considerations.

4. The injury criterion values (HIC, Chest Clip, and Femur Loads) generated by using the redundant data sets shall not deviate more than ten (10) percent from their respective primary injury criterion values.

APPENDIX H

FOOT INSTRUMENTATION – RECOMMENDED PRACTICE

APPENDIX H

RECOMMEND PRACTICE - HYBRID III FOOT INSTRUMENTATION

The Hybrid III Driver and Passenger feet are instrumented to measure acceleration in the X, Y, and Z axis for both the outboard ankle and toe regions as shown in the following diagrams. A tri-axial cube with SAE572-S4 accelerometers is used. The design is easily adapted to the proposed 45-degree ankle.

Easily Adapted to Proposed 45 degree ankle

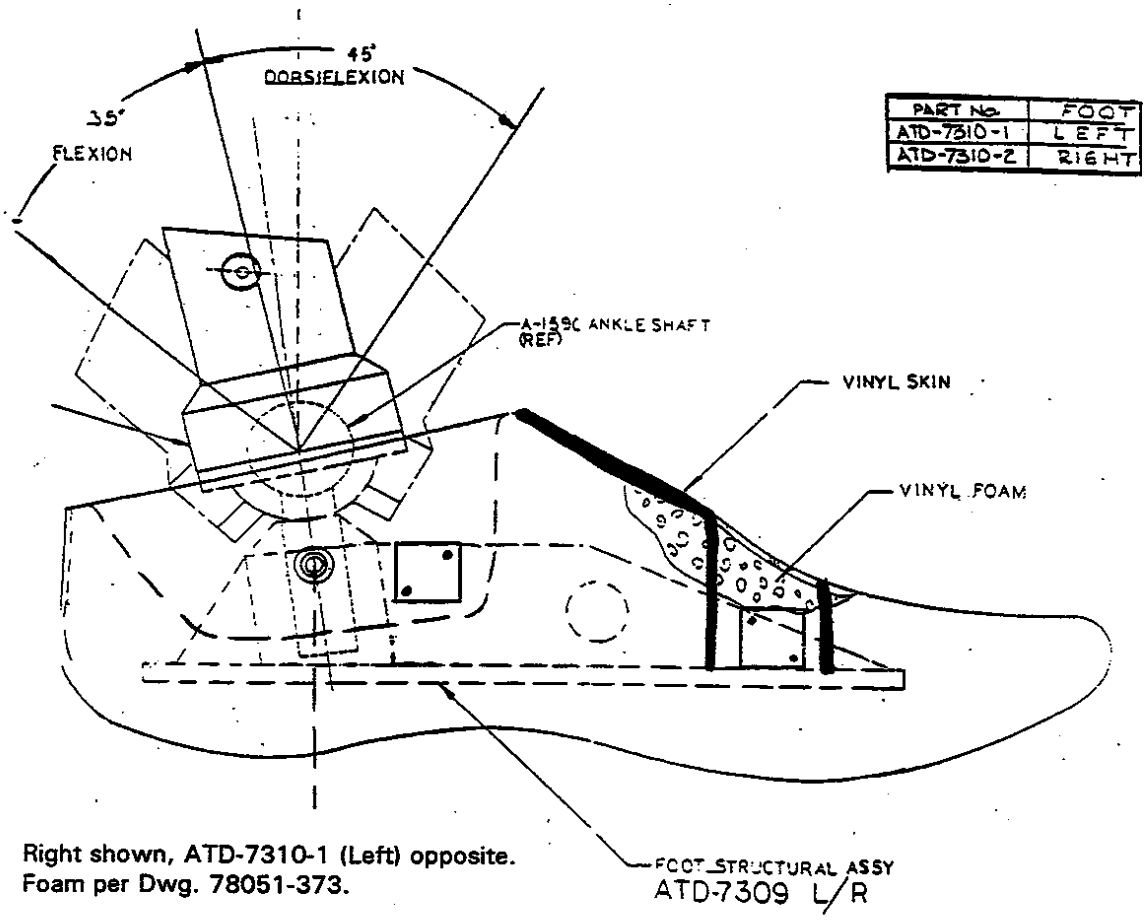

Right shown, ATD-7310-1 (Left) opposite.
Foam per Dwg. 78051-373.

Skin.
Model 78051-284(L) & -285 (R) within ± 0.02 in.

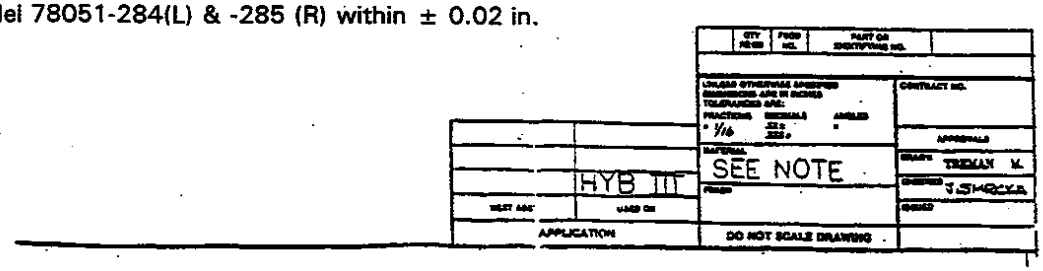

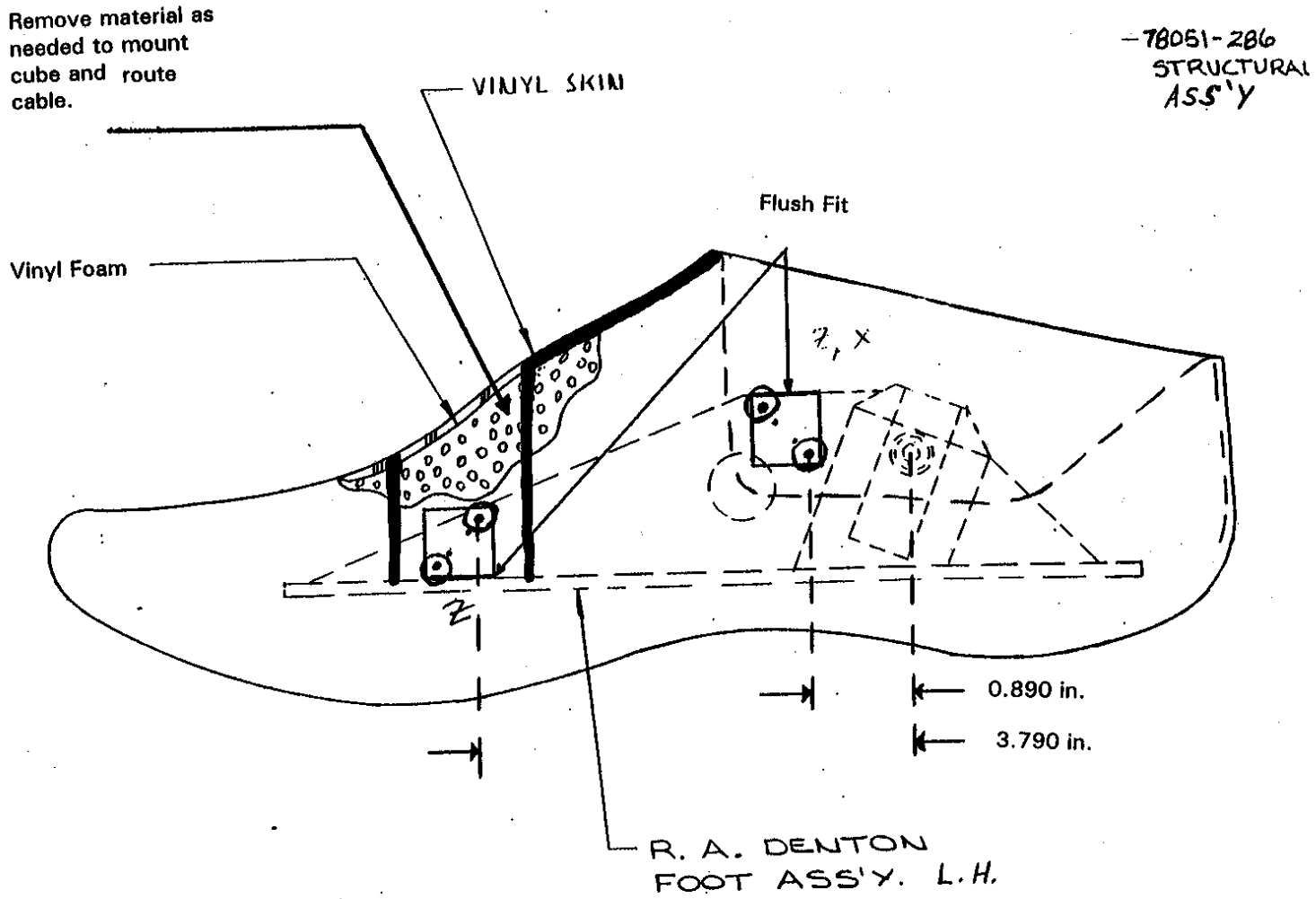
Remove material as needed to mount cube and route cable.
VINYL SKIN
-78051-286 STRUCTURAL ASS'Y
Flush Fit
Vinyl Foam
Z, X
Z
0.890 in.
3.790 in.
R. A. DENTON FOOT ASS'Y. L.H.

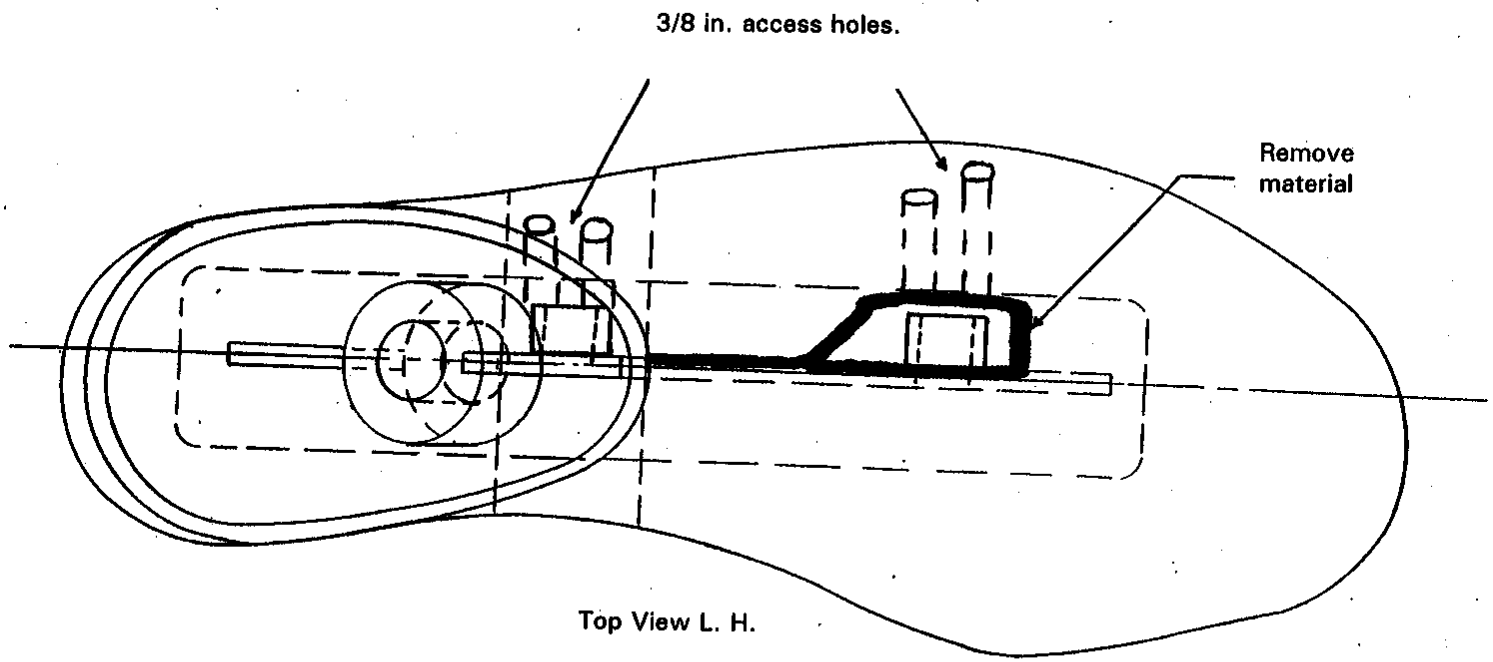

Accelerometer cables are routed on top of the foot and from the ankle to the lower leg.

Foot cube.

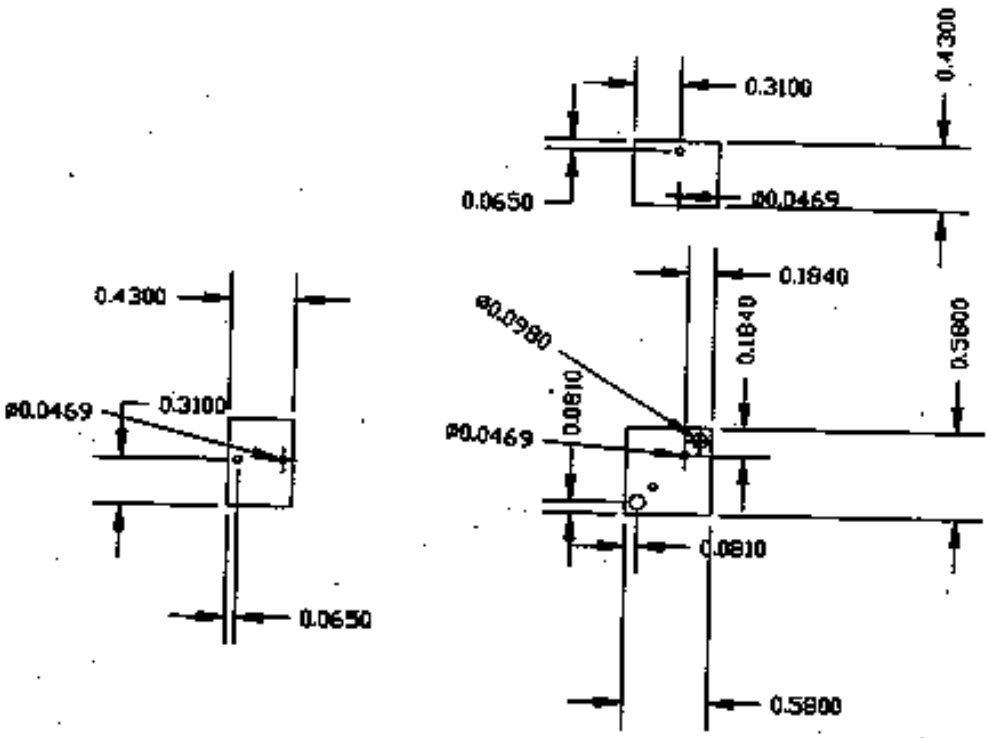

ALL 0.0469 HOLES ARE TAPPED FOR 0-80 SCREWS
ALL DIMENSIONS ARE IN INCHES

APPENDIX I

COMPUTER PROGRAMS

APPENDIX I
COMPUTER PROGRAMS

Computer programs related to signal processing may be obtained from the NHTSA website to generate the specification data files as defined in the guides. Visit http://www-nrd.nhtsa.dot.gov/ and click on "R&D Software." Under "NVS Software Applications," select the latest version of the program desired.

For questions related to this software, contact:

Office of Crashworthiness Standards
DOT / NHTSA
1200 New Jersey Ave, SE
W43-404 / NVS-110
Washington, DC 20590
Telephone No.: (202) 366-1740

APPENDIX J

FMVSS 212, 219 (PARTIAL), 301, AND 305 REQUIREMENTS FOR FRONTAL NCAP

1. PURPOSE

The New Car Assessment Program's Frontal Impact Test Procedure is based upon FMVSS 208. This procedure will allow the Office of Crashworthiness Standards (OCWS) to gain supplemental information on the test vehicle.

All test variables are to be evaluated at NCAP's 35mph (56.3km/h) test vehicle velocity

2. FMVSS 212

A. *GENERAL REQUIREMENTS*

This standard establishes windshield retention requirements for motor vehicles during crashes. Vehicles equipped with passive restraints must retain 50 percent of each side of the windshield on each side of the longitudinal centerline after they are subjected to a 56.3kph (35 mph) frontal barrier impact. Vehicles not equipped with passive restraints must retain not less than 75 percent of the windshield during the 56.3kph (35 mph) frontal barrier impact.

It is the contractor's responsibility to follow the most updated FMVSS 212 test procedure when conducting this assessment as part of NCAP testing. The latest published versions of all FMVSS test procedures may be found at:

http://www.nhtsa.gov/Vehicle+Safety/Test+Procedures

B. *PROCEDURE*

Windshield retention must be checked directly after a frontal barrier impact. Loss of windshield protection can be determined when a piece of paper can pass between the windshield edge and the vehicle body. Photographs of the windshield periphery should be taken before the vehicle is placed in the FMVSS 301 static rollover machine.

3. FMVSS 219 (PARTIAL)

A. *GENERAL REQUIREMENTS*

This standard specifies limits for the displacement of vehicle components into the windshield area during a crash.

It is the contractor's responsibility to follow the most updated FMVSS 219 test procedure when conducting this assessment as part of NCAP testing. The latest published versions of all FMVSS test procedures may be found at:

http://www.nhtsa.gov/Vehicle+Safety/Test+Procedures

	In "Protected Zone"	**Below "Protected Zone"**
Vehicle Component Penetration	Maximum of 0.25 inch into template	Must not penetrate inner surface of windshield

The word "partial" is used since the 219 Styrofoam windshield protected zone template has been eliminated for all NCAP 56.3kph (35mph) frontal impact tests in order that the forward motion of the driver and passenger dummies can be filmed through the vehicle's windshield. However, the lower boundary of the protected zone shall be marked on the windshield glass, which accounts for a partial standard test.

When a passenger car, multipurpose passenger vehicle (MPV), light truck or bus (GVWR of 10,000 pounds or less) traveling longitudinally forward at 35 mph ± 0.5 mph impacts a fixed collision barrier that is perpendicular to the line of travel of the vehicle (PERPENDICULAR FRONTAL IMPACT TEST), no part of the vehicle outside the occupant compartment, except windshield molding and other components designed to be normally in contact with the windshield, shall penetrate the protected zone to a depth of more than 0.25 inch. No such part of the vehicle shall penetrate the inner surface of that portion of the windshield within the Daylight Opening (DLO) below the protected zone.

The protected zone must be checked directly after a frontal barrier impact.

NOTE: **The standard does NOT apply to forward control vehicles, walk-in van-type vehicles, or to open-body-type vehicles with fold-down or removable windshields.**

B. *PROTECTED ZONE LOWER EDGE MARKING PROCEDURE*

The lower edge of the protected zone is determined as follows:

1. Place a 6.5-inch diameter rigid sphere weighing 15 pounds in a position such that it simultaneously contacts the inner surface of the windshield glazing and the surface of the instrument panel, including padding.

2. Draw the locus of points on the inner surface of the windshield contacted by the sphere across the width of the instrument panel. From the outer most contactable points, extend the locus line horizontally to the edges of the glazing material.

NOTE: **Do not scratch glazing as a method of marking the contact between sphere and windshield.**

3. Draw a line on the inner surface of the windshield below and 0.5 inch distant from the locus line.

4. The lower edge of the protected zone is the longitudinal projection onto the outer surface of the windshield on the line determined in item C.

The protected zone is the space enclosed by the following surfaces:

1. The outer surface of windshield in the pre-crash configuration.

2. The focus of points 3 inches outward along perpendiculars drawn to each point on the outer surface of the windshield.

3. The locus of lines forming a 45° angle with the outer surface of the windshield at each point along the top and side edges of the outer surface of the windshield and the lower edge of the protected zone previously determined, in the plane perpendicular to the edge at that point.

4. FMVSS 301

A. GENERAL REQUIREMENTS

This standard specifies requirements for the integrity of motor vehicle fuel systems.

It is the contractor's responsibility to follow the most updated FMVSS 301 test procedure when conducting this assessment as part of NCAP testing. The latest published versions of all FMVSS test procedures may be found at:

http://www.nhtsa.gov/Vehicle+Safety/Test+Procedures

1. Frontal Impact -

TIME	MAX. FLUID SPILLAGE
From impact until vehicle motion ceases	1 ounce by weight
For 5 minute period after vehicle motion ceases	5 ounces by weight
For the next 25 minutes	1 ounce by weight/minute

2. Static Rollover -

TIME	MAX. FLUID SPILLAGE
For 5 minute period from onset of rotation at each 90° position	5 ounces by weight
For 6th minute	1 ounce by weight
For 7th minute (if required)	1 ounce by weight
For 8th minute (if required)	1 ounce by weight

B. *FACILITY AND EQUIPMENT – PRE-TEST REQUIREMENTS (STATIC ROLLOVER MACHINE)*

The rollover machine must be capable of rotating the barrier-impacted test vehicle about its longitudinal axis with the axis kept horizontal, to each successive increment of 90°, 180°, and 270° at a uniform rate, with 90° of rotation taking place in any time interval from 1 to 3 minutes. Leakage will be collected for the 5 minute period from the beginning of rotation plus any additional 1 minute collection periods that are required. Containers for the collection of possible Stoddard solvent spillage and a calibrated stopwatch for timing the fluid collection intervals are required. Containers must be labeled before they are photographed.

C. *FUEL SYSTEM INTEGRITY*

After the vehicle impact, fuel system Stoddard solvent leakage will be collected by hand and documented with a real-time (24-30 fps) motion picture camera and stopwatch. The “tea cup method” involves simply placing a collection vessel beneath the leakage source and timing the intervals of several collected volumes. The collected Stoddard solvent samples can subsequently be measured and spillage rates calculated. If the “tea cup method” is used, the test personnel must be in position to scramble to observation points around the test vehicle at the instant the vehicle comes to rest after the impact event.

NOTE: It is the Contractor’s responsibility to collect any suspect liquids leaking from the vehicle post-test and analyze the contents if necessary.

D. *STATIC ROLLOVER PROCEDURE*

The Contractor must conduct a static rollover test within 30 minutes after the vehicle impact. The Contractor must keep the test vehicle under constant observation for Stoddard solvent leakage during the transition between impact and static rollover testing.

When the test vehicle is rotated in a fixture on its longitudinal axis to each successive increment of 90°, following an impact crash, Stoddard solvent spillage,

from the onset of rotational motion, shall not exceed a total of 5 ounces by weight for the first 5 minutes of testing at each successive 90° increment. For the remaining testing period, at each increment of 90°, solvent spillage during any l-minute interval shall not exceed 1ounce by weight.

E. *STATIC ROLLOVER TEST CONDITIONS*

Within 30 minutes after a vehicle impact, the vehicle is rotated in a test fixture about its longitudinal axis, with the axis kept horizontal, to each successive increment of the following, at a uniform rate, with 90° of rotation taking place in any time interval from 1 to 3 minutes.

1. 90°
2. 180°
3. 270°
4. 360°

After reaching each 90° increment, the vehicle is held in that position for 5 minutes.

The rollover machine must be capable of rotating the barrier impacted test vehicle about its longitudinal axis with the axis kept horizontal, to each successive increment of 90°, 180°, and 270° at a uniform rate. Leakage will be collected for the 5-minute period from the beginning of rotation plus up to three 1-minute collection periods. Containers for the collection of possible Stoddard solvent spillage and a calibrated stopwatch for timing the fluid collection intervals are required. Containers must be labeled before they are photographed.

5. FMVSS 305

A. *GENERAL REQUIREMENTS*

This standard specifies performance requirements for limitation of electrolyte spillage, retention of propulsion batteries, and electrical isolation of the chassis from the high-voltage system during the crash event. This standard applies to vehicles that use electricity as propulsion power.

It is the contractor's responsibility to follow the most updated FMVSS 305 test procedure when conducting this assessment as part of NCAP testing. The latest published versions of all FMVSS test procedures may be found at:

http://www.nhtsa.gov/Vehicle+Safety/Test+Procedures

APPENDIX K

METRIC CONVERSIONS

APPENDIX K
NHTSA PREFERRED PRACTICE FOR METRIC CONVERSIONS

NHTSA is converting to the metric system of measurement. The authority for this conversion is DOT Order1020.1D, which was issued in response to 5164 of the Omnibus Trade and Competitiveness Act of 1988 (PL 100-418) and Executive Order 12770. The agency's plan for conversion was approved by the Secretary of Transportation on October 21, 1991 and were published on April 21, 1992 (57FR77 14619). This preferred practice provides general guidance for the conversion, and includes a listing of the preferred units for the quantities most frequently used by the agency.

GENERAL GUIDELINES

1. Safety levels shall not be decreased as a result of a change to the metric system of units.

2. Due consideration will be given to the effects of conversion on the nation's economy, since the intent of PL 100-418 is to improve the competitive position of United States industry.

3. Harmonization considerations will be taken into account where appropriate. Canadian and UK standards will be used as guides where applicable.

4. Conversion will be done on a case by case basis. “Equivalent” rather than “exact” conversion will be given preference except where there is a clear safety need for an exact conversion. Here equivalent means a close nominal value in contrast to exact which means a precise mathematical conversion.

5. Whenever appropriate, procedures for determining the number of significant figures will follow the practice shown in SAE J916, May 1991. To the extent possible, test procedures developed by NHTSA's Office of Enforcement will be used to determine the implied precision required as part of the significant figure determination.

6. SAE J916, May 1991 will be used as the primary source for conversion factors. NIST Special Publication 811 will be used as a backup source.

PREFERRED UNITS

The following listing shows units preferred for use within NHTSA and the acceptable abbreviation. Most of the units on this list refer to quantities used in mechanical/automotive engineering practice plus some other units normally used by the agency. For quantities used in electrical engineering, heat power engineering, lighting, or quantities not listed, see SAE J916, May 1991.

METRIC CONVERSATION

WHEN MEASURING	THE PREFERRED UNITS ARE
ACCELERATION	
angular	degrees per second squared -preferred radians per second squared -acceptable
general	meters per second squared
vehicle	kilometers per hour per second
of gravity	g (Note: this is not an SI unit)
ANGLE	
general (planer)	degrees (Note: this is not an SI unit)
AREA	
vehicle frontal area	square meters
hose flow area	square centimeters
small land area	square meters
very large land area	square kilometers
DENSITY	
solid or gas	kilometers per cubic meter
liquid	kilometers per liter
ENERGY	
heat	kilojoules
mechanical	joules
FLOW	
mass flow rate	kilometers per second
volume flow rate for liquids	liters per time
volume flow rate for gases	cubic meters per time
FORCE	
general	newton
large forces	kilonewton

WHEN MEASURING	THE PREFERRED UNITS ARE
IMPULSE	
general	newton seconds
LENGTH	
engineering drawings	millimeters
motor vehicle dimension	millimeters or meters
vehicle crash deformations	centimeters
short land distance	meters
long land distance	kilometers
MASS	
small masses	grams
large masses	kilogram
very large masses	metric ton
MOMENTS	
second moment of area	millimeters or centimeters
of force, torque or bending	newton meters
of inertia	gram or kilogram meter square
MOMENTUM	
general	kilograms meters per second
POWER	
general	watts or kilowatts
PRESSURE	
general	kilopascals
STRAIN	
general	micrometers per meter
STRESS	
general	megapascals

WHEN MEASURING	THE PREFERRED UNITS ARE
TEMPERATURE	
general use	degrees celsius
absolute	degrees kelvin
VELOCITY	
angular	degrees per second -preferred radians per second -acceptable
general	meters per second
vehicle	kilometers per hour
VOLUME	
engine displacement	liters
liquids in general	liters
other volumes	cubic meters

APPENDIX L

UPPER NECK LOAD CELL POLARITY CHECK

APPENDIX L

PROCEDURE FOR CHECKING DUMMY UPPER AND LOWER NECK LOAD CELL POLARITY FOR THE HYBRID III 50TH AND 5TH PERCENTILE

Purpose:

The purpose of this procedure is to provide a practical methodology for checking and documenting the recorded polarity of the data channel for each dummy mounted load cell relative to the NHTSA sign convention. Documenting the polarity of channels will serve to increase the confidence that polarities have been correctly determined. The polarities in this document are the same as those of the SAE J211.

SAE J211 Procedure:

The body coordinate system used for reference is attached to the dummy and is x positive pointing forward, y positive pointing to the right, and z positive pointing down.

To check the polarity of the upper and lower neck load cells, the head and chest must be moved in opposite directions to make a measurable force in the neck. Moving the head rearward and the chest forward should result in a positive F_x. Moving the head left and the chest right should result in a positive F_y. Lifting the head upward and the chest downward should result in a positive F_z.

A similar methodology is applied with determining the polarity of the moment measuring load cells. Moving the left ear toward the left shoulder should result in a positive M_x. Moving the chin toward the sternum results in a positive M_y and moving the chin toward the left shoulder will have a positive M_z.

If any of these motions do not result in a positive reading, the polarity needs to be changed to agree with the sign convention. (A sign change in the software may be the simplest solution.)

Dummy Upper Neck and Lower Neck Load Cell Polarity Check

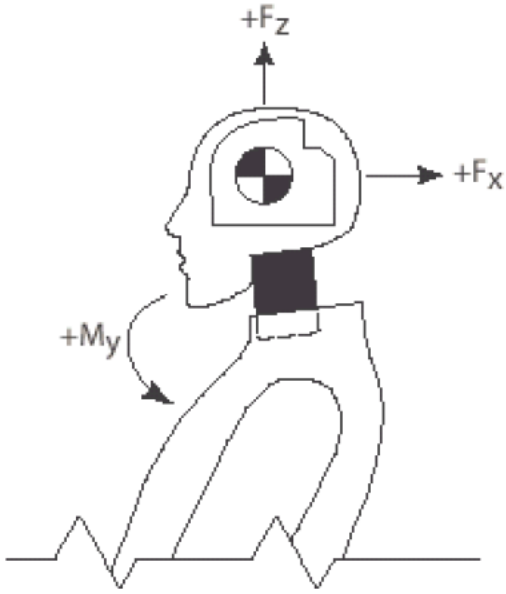

Left Side View

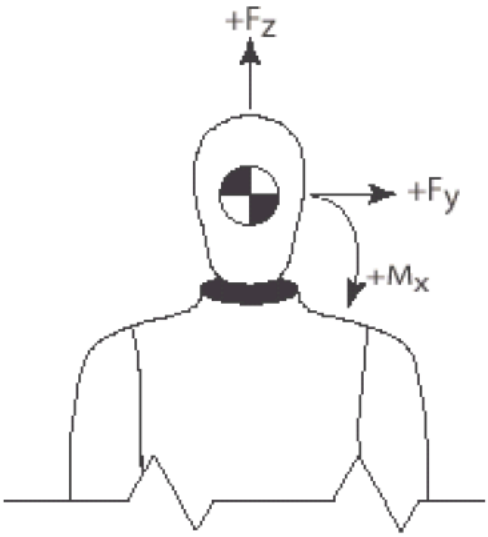

Front View

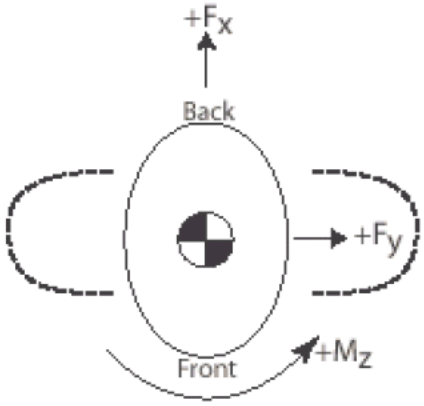

Top View

Polarity Check Data Sheet For Upper and Lower Neck Load Cells									
Dummy Type:_____		Serial No._____				Date:_____			
		Channel Output				Negative Channels to be Reversed in Data Acquisition System			
		Upper Neck		Lower Neck		Upper Neck		Lower Neck	
Load Cell	Motion	+	-	+	-	Y	N	Y	N
Fx	Head Rearward/ Chest Forward								
Fy	Head Left/ Chest Right								
Fz	Head Upward/ Chest Downward								
Mx	Left Ear to Left Shoulder								
My	Chin to Sternum								
Mz	Chin to Left Shoulder								

APPENDIX M

HEAD NINE-ACCELEROMETER ARRAY POLARITY CHECK

APPENDIX M

PROCEDURE FOR CHECKING AND RECORDING DUMMY ACCELEROMETER POLARITY FOR THE HIII 50TH AND 5TH PERCENTILE NINE ACCELEROMETER ARRAY HEAD WITH REDUNDANT C.G. ACCELEROMETERS

Purpose:

The purpose of this procedure is to provide a practical methodology for checking and documenting the recorded polarity of the data channel for each dummy mounted accelerometer relative to the NHTSA sign convention. Documenting the polarity of channels will serve to increase the confidence that polarities have been correctly determined. The polarities in this document are the same as those of the SAE J211 and SAE J1733.

Background:

Standardized coordinate systems and recorded polarities for various transducer outputs defined relative to positive directions of those coordinate systems are defined for crash test dummies, vehicle structures, and laboratory fixtures in the SAE J211 standard. The standardized coordinate system and polarities for data permits comparison of data from different crash test facilities.

There are many ways to influence the polarity of a data channel. NHTSA has required the polarity of any given manufacturer's instrumentation be compatible with and recordable in a J211 channel. The channel by definition includes all the instrumentation from the transducer to the data acquisition system output. The channels therefore include the accelerometers mounted in the dummy connected to a data acquisition system using connectors, wiring, data acquisition software and hardware. The polarity of a data channel for any given dummy may therefore be affected by changing the manufacturer of the accelerometer, positive and negative pins from the accelerometer to the wiring in a connector, the polarity assigned in software, and by changing the way it is mounted in the dummy.

Since there are many ways to influence the polarity of a data channel it is appropriate to document the polarity of the assembled channel just before testing to assure the accelerometer is not exchanged with that of another manufacturer's, and that no changes are made to the way is mounted in the dummy, the connector pin arrangement, and polarity assigned in software before testing.

When a test dummy is delivered for a test and connected to the data acquisition system the polarity of the internal accelerometers can be established using the following approach. The procedure requires the user to think of the data channel as a black box. The procedure requires manipulating the dummy head to determine the polarity of the black box with respect to the sign convention. If the polarity is wrong, then steps must be taken to correct it prior to submitting data to NHTSA, so that data is in accordance with the sign convention. However, it is

recommended to correct and document the channel polarity at the test site so no further modifications to the data are required. If difficulty is experienced in determining the polarity when these procedures are being properly followed it may indicate that the accelerometer has not been mounted in accordance with the dummy instrumentation assembly drawings contained in the appropriate Nine Array Head with Redundant C.G. Accelerometers User's Manual.

SAE J211 Procedure:

The body coordinate system used for reference is attached to the dummy and is x positive pointing forward, y positive pointing to the right, and z positive pointing down. For NHTSA tests the accelerometers referred to are those meeting NHTSA SA572-S4 specifications.

The SAE J1733 explains that for any dummy component oriented in its standard position blows to the back side, left side, and top will produce positive accelerations relative to its +x, +y, and +z directions, respectfully. As an example to document the polarity of the dummy's head x-axis accelerometer data channel in a plot similar to **Figure 1**, apply a blow to the back of the head with a rubber mallet and record the data channel output. The polarity of **Figure 1** dummy channel is positive and no changes are needed to conform to the sign convention. Similarly to document the polarity of the dummy's y and z axis accelerometer data channels, apply a blow to the left side and top of the head with a rubber mallet (never apply the blow directly to an accelerometer mount) and record the data channel output as shown for the y-axis in **Figure 2**.

Analysis of **Figure 2** for the y-axis shows that the polarity of the y-axis accelerometer data channel in the dummy head in this example is negative. Change the polarity to be positive (perhaps the simplest way is to change the sign in the software) to agree with the sign convention and make a new plot to document the change. Following this approach it is possible to document the polarity of each accelerometer data channel in the dummy head.

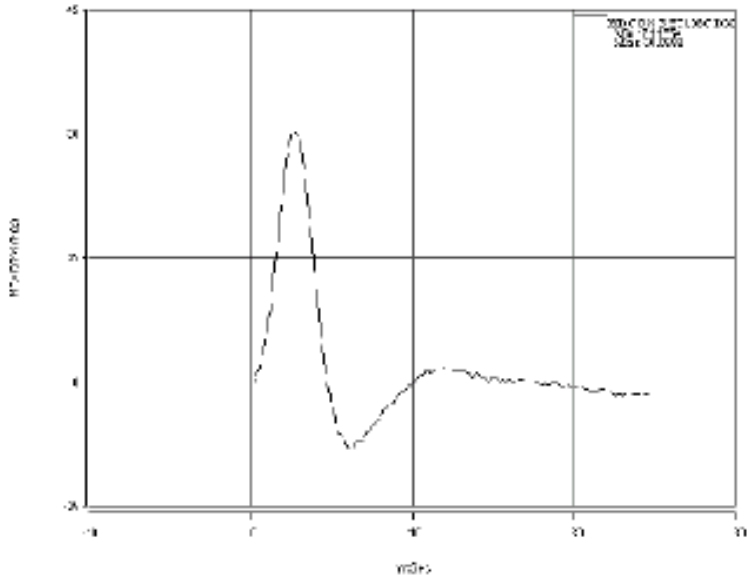

Figure 1 – Response of X Axis Accelerometer Data Channel from blow to rear of head showing desired positive polarity

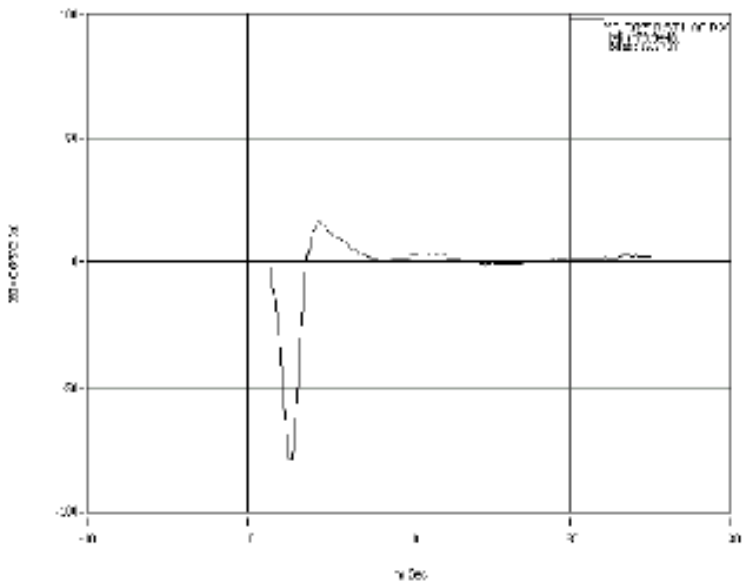

Figure 2 – Response of Y Axis Accelerometer Data Channel from blow to left side of head showing incorrect (negative) polarity

Polarity Check Data Sheet For X - Axis Accelerometers

Dummy Type:_____ **Serial No.**_____ **Date:**_____

Component	Channel Output (g) Orientation: Face Down (FD)	Channel Output (g) Orientation: Face Up (FU)	Orientation of Most Positive Value (FU or FD)	J211 Orientation for Positive Polarity	Negative Channels to be Reversed In Data Acquisition System
Head C.G.				FU	
Head C.G. Redundant NAAH*				FU	
Head Top NAAH*				FU	
Head Left NAAH*				FU	

* NAAH - Indicates Nine Accelerometer Array Head

Polarity Check Data Sheet For Y - Axis Accelerometers

Dummy Type:_____ **Serial No.**_____ **Date:**_____

Component	Channel Output (g) Orientation: Right Shoulder Down (RSD)	Channel Output (g) Orientation: Right Shoulder Up (RSU)	Orientation of Most Positive Value (RSU or RSD)	J211 Orientation for Positive Polarity	Negative Channels to be Reversed In Data Acquisition System
Head C.G.				RSU	
Head C.G. Redundant NAAH*				RSU	
Head Top NAAH*				RSU	
Head Front NAAH*				RSU	

* NAAH - Indicates Nine Accelerometer Array Head

Polarity Check Data Sheet For Z - Axis Accelerometers					
Dummy Type:_____	Serial No._____			Date:_____	
Component	Channel Output (g) Orientation: Upright (U)	Channel Output (g) Orientation: Lean Down (D)	Orientation of Most Positive Value (U or D)	J211 Orientation for Positive Polarity	Negative Channels to be Reversed In Data Acquisition System
Head C.G.				D	
Head C.G. Redundant NAAH*				D	
Head Left NAAH*				D	
Head Front NAAH*				D	

* NAAH - Indicates Nine Accelerometer Array Head

APPENDIX N
TEST DELIVERABLES AND REPORT GUIDELINES

NEW CAR ASSESSMENT PROGRAM REPORT GUIDELINES

TABLE OF CONTENTS

1. TEST DELIVERABLES AND REPORTING REQUIREMENTS 1

1.1 MONTHLY STATUS REPORTS 1
1.2 APPARENT TEST FAILURE 1
1.3. NCAP TEST DELIVERABLES 1

2. SAMPLE TEST REPORT LAYOUT 11

REPORT AREA 1: PURPOSE AND SUMMARY OF TEST 12
REPORT AREA 2: DATA SHEETS 14
REPORT AREA 3: PHOTOGRAPHS 15
REPORT AREA 4: DUMMY RESPONSE DATA TRACES 19
REPORT AREA 5: DUMMY CALIBRATION AND PERFORMANCE VERIFICATION 22
REPORT AREA 6: TEST EQUIPMENT AND INSTRUMENTATION CALIBRATION 22

3. DATA SHEETS 23

DATA SHEET NO. 1 - GENERAL TEST AND VEHICLE PARAMETER DATA 24
DATA SHEET NO. 2 - SEAT ADJUSTMENT, FUEL SYSTEM, AND STEERING WHEEL 28
DATA SHEET NO. 3 - DUMMY LONGITUDINAL CLEARANCE DIMENSIONS 30
DATA SHEET NO. 4 - DUMMY LATERAL CLEARANCE DIMENSIONS 31
DATA SHEET NO. 5 - SEAT BELT POSITIONING DATA 32
DATA SHEET NO. 6 - HIGH-SPEED CAMERA LOCATIONS AND DATA 33
DATA SHEET NO. 7 - VEHICLE ACCELEROMETER DATA 35
DATA SHEET NO. 8 - PHOTOGRAPHIC REFERENCE TARGET LOCATIONS 36
DATA SHEET NO. 9 - LOAD CELL LOCATIONS ON FIXED BARRIER 37
DATA SHEET NO. 10 -TEST VEHICLE SUMMARY OF RESULTS 38
DATA SHEET NO. 11 - POST-TEST OBSERVATIONS 39
DATA SHEET NO. 12 - VEHICLE PROFILE MEASUREMENTS 40
DATA SHEET NO. 13 - ACCIDENT INVESTIGATION DIVISION DATA 42
DATA SHEET NO. 14 - VEHICLE INTRUSION MEASUREMENTS 43
DATA SHEET NO. 15 - SUMMARY OF FMVSS 212, 219 (PARTIAL), AND 301 DATA 45
DATA SHEET NO. 16 - FMVSS 301 STATIC ROLLOVER RESULTS 47
DATA SHEET NO. 17 - DUMMY/VEHICLE TEMPERATURE STABILIZATION 48

4. FORMS 49

FORM NO. 1 - TEST VEHICLE INFORMATION 50
FORM NO. 2 - REPORT OF VEHICLE CONDITION 66
FORM NO. 3 - LABORATORY NOTICE OF TEST FAILURE 68
FORM NO. 4 - MONTHLY VEHICLE STATUS REPORT 69
FORM NO. 5 – SAMPLE QUICKLOOK REPORT 70

1. TEST DELIVERABLES AND REPORTING REQUIREMENTS

1.1 MONTHLY STATUS REPORTS

The contractor shall submit a Monthly Vehicle Status Report to the COTR. The form can be found in **Section 3, Forms**, in this document. The report shall be submitted until all vehicles or items of equipment are disposed of.

1.2 APPARENT TEST FAILURE

An apparent test failure shall be communicated by telephone to the COTR within 24 hours with written notification mailed within 48 hours (Saturday and Sundays excluded). A Laboratory Notice of Test Failure (located in Section 3 of this document) with a copy of the particular NCAP test data sheet(s) and preliminary data plot(s) shall be included. In the event of a test failure, a post-test calibration check of some of the critically sensitive test equipment and instrumentation may be required for verification of accuracy. The necessity for the calibration shall be at the COTR's discretion and shall be performed without additional costs to the Office of Crashworthiness Standards (OCWS).

1.3. NCAP TEST DELIVERABLES

Required deliverables for each test are discussed in this section. A Schedule of Deliverables is also provided at the end of this section

A. QUICKLOOK REPORT

The Quicklook Report is a preliminary summary of the test that should be e-mailed to the OCWS within 24 hours of the impact event. The Quicklook Report should detail all relevant injury criteria, vehicle information, airbag deployment, and evidence of FMVSS 208, FMVSS 212, FMVSS 219, FMVSS 301, and FMVSS 305 (if applicable) compliance, and should include relevant data traces. Also, anything interesting or out of the ordinary should be included in the Quicklook Report in a comments section. A sample Quicklook Report is included as Form 5 in this document.

B. DATA TAPE

Within three (3) working days of the test, the Contractor shall email the NHTSA the test data formatted as specified in the Office of Crashworthiness Research Data Reference Guide -Volume I: Vehicle Tests. Visit http://www-nrd.nhtsa.dot.gov/ and click on "R&D Software." Under "NVS Software Applications, click "ENTRÉE for Windows" and select the latest version of the program.

Data entry software (ENTRÉE) may also be downloaded from the website and used to generate the specification data files as defined in the guides. Visit

http://www-nrd.nhtsa.dot.gov/ and click on "R&D Software." Under "NVS Software Applications," click "ENTRÉE for Windows" and select the latest version of the program.

C. QUICKLOOK PACKAGE

The Quicklook Package is a .zip file that includes all of the information necessary for quality control review. It is uploaded to an FTP site for review by the OCWS. This data is a summary of the test and includes the data tape, all photographs, and all videos, as well as a copy of the Quicklook Report previously e-mailed to the OCWS. The filename for the Quicklook Package should be formatted as follows:

<NHTSANO><Model Year><Make & Model><Body><NCAP>QC.zip

The contractor will also provide website-related material in a folder within this file. The contractor will provide a .jpg image of the vehicle impact appropriate for use on the website. This photo should be a duplicate of photo number 75 in the Frontal NCAP photo list found in **Section 3** of this document. The photo should be labeled as follows:

<Model Year><Make><Model>Frontal Impact Event for web.jpg

It should also be 227 pixels wide by 127 pixels tall, landscape (horizontal) orientation, and of a high image quality.

In this same folder, the contractor will also use Camera No. 1, the Real-Time Left Overall Camera, as described in Section 9 of the main procedure, to provide a web-ready video of the impact event in .wmv format. This film should be labeled as follows:

<Model Year><Make><Model>Frontal Impact Event.wmv

D. FTP WEBSITE

To expedite data transfer between the Contractor and NHTSA, a File Transfer Protocol (FTP) website will be made available to Contractors. The Quicklook Package (see above **Section 1.3, C**) is required to be uploaded via FTP five (5) working days after the test has been completed. The agency will then retrieve the data to begin the quality control process.

(1) ACCESSING THE FTP SITE

The Point of Contact at each test facility will receive an e-mail with the FTP site address and a unique username and password to access the website. A new password will be issued on the 1st of each month. Any FTP client can be used to access and upload data.

(2) LOADING TEST DATA

The Quicklook Package must be placed in organized and labeled folders such that each folder's contents are easily recognizable. Once the data is organized, the Contractor shall provide **ONE** (1) .zip file per test via the FTP website. Upload the .zip file using an FTP client.

To ensure successful transfers, please contact your network administrator and confirm that FTP transfers are permitted. Set your FTP client program to upload in passive (PASV) mode and set the "file exists" action to "skip".

For FTP assistance, please contact the FTP administrator if one has been identified; otherwise, contact the COTR.

E. DRAFT TEST REPORT

Contractors are required to submit to the OCWS via e-mail a draft Final Test Report, an electronic copy in .pdf or .doc form, within two weeks of the test being conducted. The Contractor and the COTR will then be able to discuss the details of both test conduct and report content early in the test program.

F. FINAL TEST REPORT AND DELIVERABLES

Contractors are required to review and proofread all Final Test Reports and related test materials before submittal to the COTR. The OCWS will not act as a report quality control office for Contractors. Reports containing a significant number of errors will be returned to the Contractor for correction, and a hold will be placed on invoice payment for the particular test.

The Contractor shall upload a final version of the associated test data, photos, and videos (high speed and real-time) as a .zip file to the FTP site within two weeks of receiving preliminary test report corrections from the OCWS. The format for its filename should be as follows:

<NHTSANO><Model Year><Make & Model><Body><NCAP>Final.zip

The following is a summary of all NCAP test deliverable requirements:

Crash Test Deliverable	Procedure Section	File Format & Naming Convention	Time Requirement	Submit Via	Submit To
Quicklook Report	12.5, A	.pdf with filename format: <NHTSANO> <ModelYear> <Make&Model> <Body> <NCAP/SINCAP/PINCAP> Quicklook.pdf	One (1) day from test	Email	OCWS
Data Tape	12.5, B	.zip with filename format: <NHTSANO> <Model Year> <Make & Model> <Body> <NCAP/SINCAP/PINCAP> Datatape.zip	Three (3) business days from test	Email	OCWS
Quality Control Package: web photo and video requirements, high speed and real time videos, and photos	12.5, C	.zip with filename format: <NHTSANO> <Model Year> <Make & Model> <Body> <NCAP/SINCAP/PINCAP> QCPackage.zip	Five (5) business days from test	FTP	FTP
Preliminary Test Report	12.5, E	.pdf with filename format: <NHTSANO> <ModelYear> <Make&Model> <Body> <NCAP/SINCAP/PINCAP> DraftReport.pdf	Two (2) weeks from test date	Email/FTP depending on size	OCWS/FTP
Final Deliverables: Final Test Report, photos, and high speed and real time videos	12.5, F	.zip with filename format: <NHTSANO> <Model Year> <Make & Model> <Body> <NCAP/SINCAP/PINCAP> FinalDeliverables.zip	Two (2) weeks after receiving corrections to preliminary test report.	FTP	FTP

G. TEST REPORT REQUIREMENTS

The final test report and associated documentation (including photographs and videos) is relied upon as the chronicle of the NCAP test. The final documentation and data will be released to the public domain after review and acceptance by the COTR. For these reasons, each final report must be a complete document capable of standing by itself.

The contractor should use detailed descriptions of all NCAP test events. Any events that are not directly associated with the NCAP but are of technical interest should also be included. The contractor should include as much detail as possible in the report.

Instructions for the preparation of the first three pages of the final test report are provided below for standardization purposes.

H. FIRST THREE PAGES

1. Front Cover - The information required on the cover is as follows:

a. Final Report Number, such as NCAP-ABC-XX-001

where - -

NCAP	is the test
ABC	are the initials for the laboratory
XX	are the last two digits of the fiscal year of the test program
001	is the test number for that fiscal year (001 for the 1st test conducted in the fiscal year, 002 for the 2nd test, 003for the 3rd test, etc.)

b. Final Report Title and Subtitle, such as

NEW CAR ASSESSMENT PROGRAM (NCAP)
Frontal Barrier Impact Test
****
World Motors Corporation
200X XYZ 4-door sedan
NHTSA No. CX0401

c. Contractor's Name and Address, such as

XYZ TESTING LABORATORIES, INC.
4335 West Dearborn Street
Detroit, Michigan 48090

NOTE: DOT SYMBOL WILL BE PLACED BETWEEN ITEMS (C) AND (D)

d. Date of Final Report completion

e. The words “FINAL REPORT”

f. The sponsoring agency's name and address as follows:

U. S. DEPARTMENT OF TRANSPORTATION
National Highway Traffic Safety Administration
Office of Crashworthiness Standards
1200 New Jersey Ave, SE
Room W43-410
Washington, DC 20590

2. First Page After Front Cover - A disclaimer statement and an acceptance signature block for the COTR shall be provided as follows:

This publication is distributed by the U.S. Department of Transportation, National Highway Traffic Safety Administration, in the interest of information exchange. The opinions, findings and conclusions expressed in this publication are those of the author(s) and not necessarily those of the Department of Transportation or the National Highway Traffic Safety Administration. The United States Government assumes no liability for its contents or use thereof. If trade or manufacturers' names or products are mentioned, it is only because they are considered essential to the object of the publication and should not be construed as an endorsement. The United States Government does not endorse products or manufacturers.

Prepared By: _____
Approved By: _____
Approval Date: _____

FINAL REPORT ACCEPTANCE BY OCWS:

_____
Division Chief, New Car Assessment Program
NHTSA, Office of Crashworthiness Standards

Date: _____

_____
COTR, New Car Assessment Program
NHTSA, Office of Crashworthiness Standards

Date: _____

3. Second Page After Front Cover - A completed Technical Report Documentation Page (***Form DOT F1700.7***) shall be completed for those items that are applicable with the other spaces left blank. Sample data for the applicable block numbers of the title page follows.

Block No. 1 - REPORT NO.

NCAP-ABC-XX-001

Block No. 2 - GOVERNMENT ACCESSION NUMBER

Leave blank

Block No. 3 - RECIPIENT'S CATALOG NUMBER

Leave blank

Block No. 4 - TITLE AND SUBTITLE

Final Report of NEW CAR ASSESSMENT PROGRAM Testing
of a 20XX World XYZ Deluxe 4-door sedan
NHTSA No. CX0401

Block No. 5 - REPORT DATE

March 1, 20XX

Block No. 6 - PERFORMING ORGANIZATION CODE

ABC

Block No. 7 - AUTHOR(S)

John Smith, Project Manager
Bill Doe, Project Engineer

Block No. 8 - PERFORMING ORGANIZATION REPORT NUMBER

ABC-DOT-XXX-001

Block No. 9 - PERFORMING ORGANIZATION NAME AND ADDRESS

ABC Laboratories
405 Main Street
Detroit, Ml 48070

Block No. 10 - WORK UNIT NUMBER

Leave blank

Block No. 11 - CONTRACTOR GRANT NUMBER

DTNH22-0X-D-1 2345

Block No. 12 - SPONSORING AGENCY NAME AND ADDRESS

US Department of Transportation
National Highway Traffic Safety Administration
Office of Crashworthiness Standards
1200 New Jersey Ave SE
Room W43-410
Washington, DC 20590

Block No. 13 - TYPE OF REPORT AND PERIOD COVERED

Final Test Report
Feb. 15 to Mar. 15, 20XX

Block No. 14 - SPONSORING AGENCY CODE

NVS-111

Block No. 15 - SUPPLEMENTARY NOTES

Leave blank

Block No. 16 - ABSTRACT

A 56.3 km/h NCAP Frontal Impact Test was conducted on a 200X XYZ Deluxe 4-door sedan in accordance with the specifications of the Office of Crashworthiness Standards Frontal NCAP Laboratory Test Procedure. This test was conducted to obtain data indicant of FMVSS 208, 212, 219 (partial), 301, and foot well intrusion performance. The test was conducted at the ABC Laboratories facility in Detroit, Michigan, on November 15, 200X.

The impact velocity of the vehicle was 56.1 km/h, and the ambient temperature at the barrier face at the time of impact was 28°C. The target vehicle post-test maximum crush was 351 mm at _____. The test vehicle's performance is as follows:

	Driver ATD			Pass. ATD		
Measurement Description	**Units**	**Threshold**	**Result**	**Units**	**Threshold**	**Result**
Head Injury Criteria (HIC_{15})	N/A	700		N/A	700	
Maximum Chest Compression	mm	63		mm	52	
Nij	n/a	1		n/a	1	
Neck Tension	Newtons	4170		Newtons	2620	
Neck Compression	Newtons	4000		Newtons	2520	
Left Femur Force	Newtons	10008		Newtons	6805	
Right Femur Force	Newtons	10008		Newtons	6805	

Block No. 17 - KEY WORDS

35 mph Frontal Barrier Impact test
New Car Assessment Program (NCAP)

Block No. 18 - DISTRIBUTION STATEMENT

Copies of this report are available from the following:

National Highway Traffic Safety Administration
Technical Information Services Division, NPO-411
1200 New Jersey Ave, SE
Washington, DC 20590
e-mail: tis@nhtsa.dot.gov
FAX: 202-493-2833

Block No. 19 - SECURITY CLASSIFICATION OF REPORT

Unclassified

Block No. 20 - SECURITY CLASSIFICATION OF PAGE

Unclassified

Block No. 21 - NO. OF PAGES

Add appropriate number

Block No. 22 - PRICE

Leave blank

2. SAMPLE TEST REPORT LAYOUT

Draft and final NCAP Test Reports shall have the following layout for standardization purposes:

Section		Page No.
1	Purpose and Summary of the Test	X
2	Occupant and Vehicle Information / Data Sheets	X

Data Sheet No.		Page No.
1	General Test and Vehicle Parameter Data	X
2	Seat Adjustment, Fuel System, and Steering Wheel Data	X
3	Dummy Longitudinal Clearance Dimensions	X
4	Dummy Lateral Clearance Dimensions	X
5	Seat Belt Positioning Data	X
6	High-Speed Camera Locations and Data	X
7	Vehicle Accelerometer Locations	X
8	Photographic Reference Target Locations	X
9	Load Cell Locations on Fixed Barrier	X
10	Test Vehicle Summary of Results	X
11	Post-Test Observations	X
12	Vehicle Profile Measurements	X
13	Accident Investigation Division Data	X
14	Vehicle Intrusion Measurements	X
15	Summary of FMVSS 212, FMVSS 219 (Partial) Data, and 301 Data	X
16	FMVSS 301 Static Rollover Results	X
17	Dummy/Vehicle Temperature Stabilization Chart	X

Appendix		Page No.
A	Photographs	AX
B	Dummy Response Data Traces	BX
C	Dummy Calibration and Performance Verification Data	CX

REPORT AREA 1: PURPOSE AND SUMMARY OF TEST

PURPOSE

This area briefly outlines the purpose for conducting the frontal impact test and states the appropriate test procedure followed during the test. The following is provided as an example:

> *This «Speed» km/h frontal barrier impact test is part of the Vehicle Barrier Impact Testing Program sponsored by the National Highway Traffic Safety Administration (NHTSA) under Contract No. DTNHXX-XX-D-XXXXX. The purpose of this test was to obtain vehicle crashworthiness and occupant restraint system performance data for consumer information purposes.*
>
> *The «Speed» km/h frontal barrier impact test was conducted in accordance with the Office of Crashworthiness Standards Frontal NCAP Laboratory Test Procedure.*

SUMMARY

> *A load cell barrier consisting of 36 load cells was impacted by a «Year» «Make» «Model» «BodyStyle» at a velocity of «Speed» km/h. The test was performed at XXX Engineering on «Date». Pre- and post-test photographs of the vehicle and dummies can be found in Appendix A.*
>
> *One real-time camera and 16 high-speed cameras were used to document the frontal barrier impact event. Camera locations and other pertinent camera information can be found in this report.*
>
> *One Part 572E 50th percentile male anthropomorphic test device (ATD), was placed in the driver seating position and one Part 572O 5th percentile female ATD was placed in the right-front passenger according to dummy placement instructions specified in the Frontal NCAP Laboratory Test Procedure.*

Both ATDs were fully instrumented with head, chest and pelvis tri-axial accelerometers, chest displacement potentiometers, upper neck transducers, right/left femur load cells, and lower leg instrumentation. Seat belt load cells were also on the driver's and passenger's lap and shoulder belts to measure dummy torso and pelvic section loading.

The driver (position 1) ATD (Serial No. «P1SNo») and the right-front passenger (position 2) ATD (Serial No. «P2SNo») were calibrated previous to this test. Certification details, along with instrumentation calibration data, are found in Appendix C of this report.

The «DataCh» channels of data were recorded on an on-board data acquisition system. Appendix B contains the vehicle, load cell barrier and dummy response data traces.

There was 100 percent windshield retention and no intrusion into the protected zone of the windshield during the event. There was no Stoddard solvent leakage after the event or during any phase of the static rollover.

The maximum static crush of the vehicle was «MaxCrush» mm and both the driver and passenger side doors remained closed during the impact event and were operable after the impact.

The driver's visible contact points were as follows: XXXXXX. The passenger's visible contact points were as follows: XXXXXX.

The occupant data is summarized below:

ATD Position	HIC_{15}	N_{ij}	Neck Tension (N)	Neck Compression (N)	3ms Chest Clip (Gs)	Chest Disp. (mm)	Left Femur (N)	Right Femur (N)
Driver (50th Male)								
Passenger								

(5th Female)								

REPORT AREA 2: DATA SHEETS

Data sheets can be found in Section 3 of this Appendix. For purposes of consistency, it is highly suggested that exact replicas of these sheets are inserted into the Final Test Report. The Contractor may expand upon the data sheets if desired; however, the data must be presented in the order listed on page N13 under "SAMPLE TEST REPORT LAYOUT." Any additional inclusions MUST be placed **after** the required sheets.

REPORT AREA 3: PHOTOGRAPHS

The following photographs should be included as Appendix A of the final test report, two photos per page. A vehicle information placard, identifying the test vehicle, test date, and NHTSA number, along with an indication of whether the photo was taken pre-test or post-test, shall clearly appear in each photograph. A time/date stamp on each photo is also highly recommended.

The following photographs shall be labeled as indicated. The text in parenthesis is for clarification purposes only and **need not be included**. If additional photographs are need to satisfy the requirements of report Appendix A, including but not limited to photographs required for FMVSS 305 testing, subsequent photos should be lettered and labeled appropriately.

For example, if the laboratory would like to provide more than one photograph of the dummy cable routing configuration pre-test, the photographs should be labeled as follows:

027 – Pre-test Dummy Cable Routing (required photo)
027a – Pre-test Dummy Cable Routing (additional view)

No. 001 Load Cell Location (photograph of vehicle behind mock load cell wall)

No. 002 Load Cell Wall (photograph of barrier pre-test)

No. 003 Manufacturer's Label (photograph of certification label, include a photograph of the reduced lad carrying capacity as No. 003a, if applicable)

No. 004 Tire Placard (photograph of tire placard)

No. 005 <Model Year><Make><Model> Frontal As Delivered

No. 006 Left Rear 3-4 View, as Received

No. 007 Pre-test Front View of Test Vehicle

No. 008 Post-test Front View of Test Vehicle

No. 009 Pre-test Left View of Test Vehicle (taken with vehicle at barrier)

No. 010 Post-test Left View of Test Vehicle (taken without moving vehicle post-test)

No. 011 Pre-test Right View of Test Vehicle

No. 012 Post-test Right View of Test Vehicle

No. 013 Pre-test Right Front 3-4 View

No. 014 Post-test Right Front 3-4 View

No. 015 Pre-test Left Rear 3-4 View (taken with vehicle at barrier)

No. 016 Post-test Left Rear 3-4 View (taken without moving vehicle post-test)

No. 017 Pre-test Windshield View (looking through windshield at dummies)

No. 018 Post-test Windshield View (looking through windshield at dummies)

No. 019 Pre-test Engine Compartment View

No. 020 Post-test Engine Compartment View

No. 021 Pre-test Fuel Filler Cap View

No. 022 Post-test Fuel Filler Cap View

No. 023 Pre-test Front Underbody View[1]

No. 024 Post-test Front Underbody View[1]

No. 025 Pre-test Rear Underbody View[1]

No. 026 Post-test Rear Underbody View[1]

No. 027 Pre-test Dummy Cable Routing

No. 028 Post-test Dummy Cable Routing

No. 029 Pre-test Driver Dummy Front View (taken through the windshield, directly in front of the driver with the camera parallel to the longitudinal centerline of the vehicle)

No. 030 Post-test Driver Dummy Front View (taken through the windshield, directly in front of the driver with the camera parallel to the longitudinal centerline of the vehicle)

No. 031 Pre-test Driver Dummy Window View (taken through the left window with the camera perpendicular to the longitudinal centerline of the vehicle)

No. 032 Post-test Driver Dummy Window View (taken through the left window with the camera perpendicular to the longitudinal centerline of the vehicle)

No. 033 Pre-test Driver Dummy and Vehicle Interior View (taken with the door open)

No. 034 Post-test Driver Dummy and Vehicle Interior View (taken with the door open)

No. 035 Pre-test Driver’s Seat Fore-Aft Markings (taken with the door open and in such a way that any seat positioning marks may be seen)

No. 036 Post-test Driver’s Seat Fore-Aft Markings (taken with the door open and in such a way that any seat positioning marks may be seen)

No. 037 Pre-Test View of Belt Anchorage for Driver Dummy (This photograph should show the position of the upper belt anchorage. Detent or millimeter markings should be shown and labeled, if applicable.)

No. 038 Post-Test View of Belt Anchorage for Driver Dummy (This photograph should

show the position of the upper belt anchorage. Detent or millimeter markings should be shown and labeled, if applicable.)

No. 039 Pre-test Driver Dummy Feet (taken with the door open)

No. 040 Post-test Driver Dummy Feet (taken with the door open)

No. 041 Pre-test Driver's Side Knee Bolster (without dummy present)

No. 042 Post-test Driver's Side Knee Bolster (without dummy present)

No. 043 Pre-test Driver's Side Floorpan

No. 044 Post-test Driver's Side Floorpan

No. 045 Post-Test Driver Dummy Face

No. 046 Post-test Driver Dummy Contact With Airbag

No. 047 Post-test Driver Dummy Contact With Headrest

No. 048 Pre-test View of the Steering Wheel (do NOT disassemble any parts to take this photograph)

No. 049 Post-test View of the Steering Wheel (do NOT disassemble any parts to take this photograph)

No. 050 Pre-test Passenger Dummy Front View (taken through the windshield, directly in front of the passenger with the camera parallel to the longitudinal centerline of the vehicle)

No. 051 Post-test Passenger Dummy Front View (taken through the windshield, directly in front of the passenger with the camera parallel to the longitudinal centerline of the vehicle)

No. 052 Pre-test Passenger Dummy Window View (taken through the right window with the camera perpendicular to the longitudinal centerline of the vehicle)

No. 053 Post-test Passenger Dummy Window View (taken through the right window with the camera perpendicular to the longitudinal centerline of the vehicle

No. 054 Pre-test Passenger Dummy and Vehicle Interior View (taken with the door open)

No. 055 Post-test Passenger Dummy and Vehicle Interior View (taken with the door open)

No. 056 Pre-test Passenger's Seat Fore-Aft Markings (taken with the door open and in such a way that any seat positioning marks may be seen)

No. 057 Post-test Passenger's Seat Fore-Aft Markings (taken with the door open and in such a way that the seat positioning marks may be seen)

No. 058 Pre-Test View of Belt Anchorage for Passenger Dummy (This photograph should show the position of the upper belt anchorage. Detent or millimeter markings should be shown and labeled, if applicable.)

No. 059 Post-Test View of Belt Anchorage for Passenger Dummy (This photograph should show the position of the upper belt anchorage. Detent or millimeter markings should be shown and labeled, if applicable.)

No. 060 Pre-test Passenger Dummy Feet (taken with the door open)

No. 061 Post-test Passenger Dummy Feet (taken with the door open)

No. 062 Pre-test Passenger's Side Knee Bolster (glove compartment without dummy present)

No. 063 Post-test Passenger's Side Knee Bolster (glove compartment without dummy present)

No. 064 Pre-test Passenger's Side Floorpan

No. 065 Post-test Passenger's Side Floorpan

No. 066 Post-test Passenger Dummy Contact With _____ (as applicable, include and label pictures of all dummy chalk marks transferred to the airbag(s), headrest, vehicle interior, etc.)

No. 067 Photograph of ballast installed in vehicle

No. 068 Post-test Stoddard solvent spillage location view, if required

No. 069 Post-test Speed Trap Read-out

No. 070 Vehicle at 0º on Static Rollover Device

No. 071 Vehicle at 90º on Static Rollover Device

No. 072 Vehicle at 180º on Static Rollover Device

No. 073 Vehicle at 270º on Static Rollover Device

No. 074 Vehicle at 360º on Static Rollover Device

No. 075 <Model Year><Make><Model> Frontal Impact Event

No. 076 Monroney Label Photograph

[1]**NOTE:** *The underbody views should include the following vehicle components: fuel pump, fuel lines, sender unit, fuel tank filler pipe and any other visible fuel system components.*

NOTE: The numbering convention/filenames shown above must be maintained. It is deliberate and intended to keep the photos in a specific order when sorting photos electronically.

REPORT AREA 4: DUMMY RESPONSE DATA TRACES

The following data traces should be included as Appendix B of the Final Test Report:

Fig. No.	List of Data Plots Provided In The Test Report	Page No.
1	Driver Head X Acceleration vs. Time Primary	X
2	Driver Head Y Acceleration vs. Time Primary	X
3	Driver Head Z Acceleration vs. Time Primary	X
4	Driver Head Resultant Acceleration vs. Time Primary	X
5	Driver Chest X Deflection vs. Time	X
6	Driver Chest X Acceleration vs. Time Primary	X
7	Driver Chest Y Acceleration vs. Time Primary	X
8	Driver Chest Z Acceleration vs. Time Primary	X
9	Driver Chest Resultant Acceleration vs. Time Primary	X
10	Driver Upper Neck Force X vs. Time Primary	X
11	Driver Upper Neck Force Z vs. Time Primary	X
12	Driver Upper Neck Moment Y vs. Time Primary	X
13	Driver Nij vs. Time Primary	X
14	Driver Left Femur Force vs. Time	X
15	Driver Right Femur Force vs. Time	X
16	Passenger Head X Acceleration vs. Time Primary	X
17	Passenger Head Y Acceleration vs. Time Primary	X
18	Passenger Head Z Acceleration vs. Time Primary	X
19	Passenger Head Resultant Acceleration vs. Time Primary	X
20	Passenger Chest X Deflection vs. Time	X
21	Passenger Chest X Acceleration vs. Time Primary	X
22	Passenger Chest Y Acceleration vs. Time Primary	X
23	Passenger Chest Z Acceleration vs. Time Primary	X
24	Passenger Chest Resultant Acceleration vs. Time Primary	X
25	Passenger Upper Neck Force X vs. Time Primary	X
26	Passenger Upper Neck Force Z vs. Time Primary	X
27	Passenger Upper Neck Moment Y vs. Time Primary	X

28	Passenger Nij vs. Time Primary	X
29	Passenger Left Femur Force vs. Time	X
30	Passenger Right Femur Force vs. Time	X

The following additional dummy and vehicle response data can be found in the R&D section of the NHTSA website at www.nhtsa.dot.gov

Driver Head X Acceleration Redundant
Driver Head Y Acceleration Redundant
Driver Head Z Acceleration Redundant
Driver Upper Neck Force Y
Driver Upper Neck Moment X
Driver Upper Neck Moment Z
Driver Chest X Acceleration Redundant
Driver Chest Y Acceleration Redundant
Driver Chest Z Acceleration Redundant
Driver Pelvis X
Driver Pelvis Y
Driver Pelvis Z
Driver Left Femur Redundant
Driver Right Femur Redundant
Driver Left Upper Tibia Moment X
Driver Left Upper Tibia Moment Y
Driver Left Upper Tibia Force Z
Driver Left Lower Tibia Moment X
Driver Left Lower Tibia Moment Y
Driver Left Lower Tibia Force Z
Driver Right Upper Tibia Moment X
Driver Right Upper Tibia Moment Y
Driver Right Upper Tibia Force Z
Driver Right Lower Tibia Moment X
Driver Right Lower Tibia Moment Y
Driver Right Lower Tibia Force Z
Driver Left Foot Fore Z
Driver Left Foot Aft X
Driver Left Foot Aft Z
Driver Right Foot Fore Z
Driver Right Foot Aft X
Driver Right Foot Aft Z
Driver Shoulder Belt Force
Driver Lap Belt Force
Passenger Head X Acceleration Redundant
Passenger Head Y Acceleration Redundant
Passenger Head Z Acceleration Redundant
Passenger Upper Neck Force X

Passenger Upper Neck Force Z
Passenger Upper Neck Moment Y
Passenger Chest X Acceleration Redundant
Passenger Chest Y Acceleration Redundant
Passenger Chest Z Acceleration Redundant
Passenger Pelvis X
Passenger Pelvis Y
Passenger Pelvis Z
Passenger Left Femur Redundant
Passenger Right Femur Redundant
Passenger Left Upper Tibia Moment X
Passenger Left Upper Tibia Moment Y
Passenger Left Upper Tibia Force Z
Passenger Left Lower Tibia Moment X
Passenger Left Lower Tibia Moment Y
Passenger Left Lower Tibia Force Z
Passenger Right Upper Tibia Moment X
Passenger Right Upper Tibia Moment Y
Passenger Right Upper Tibia Force Z
Passenger Right Lower Tibia Moment X
Passenger Right Lower Tibia Moment Y
Passenger Right Lower Tibia Force Z
Passenger Left Foot Fore Z
Passenger Left Foot Aft X
Passenger Left Foot Aft Z
Passenger Right Food Fore Z
Passenger Right Foot Aft X
Passenger Right Foot Aft Z
Passenger Shoulder Belt Force
Passenger Lap Belt Force
Left Rear Seat Crossmember X
Left Rear Seat Crossmember Z
Right Rear Seat Crossmember X
Right Rear Seat Crossmember Z
Left Rear Seat Crossmember X Redundant
Right Rear Seat Crossmember X Redundant
Vehicle Engine Top X
Vehicle Engine Bottom X
Load Cell Barrier A1-A9
Load Cell Barrier B1-A9
Load Cell Barrier C1-A9
Load Cell Barrier D1-A9

REPORT AREA 5: DUMMY CALIBRATION AND PERFORMANCE VERIFICATION

Data sheets from Frontal NCAP Laboratory Test Procedure **Appendix A** (Part 572E (50th Male) Dummy Performance Calibration Test Procedure) and **Appendix B** (Part 572O (5th Female) Dummy Performance Calibration Test Procedure) shall be used to document dummy calibration in Appendix C of the final test report. A copy of Appendix C should also be uploaded to the FTP site along with the Quicklook Package.

REPORT AREA 6: TEST EQUIPMENT AND INSTRUMENTATION CALIBRATION

A list of test equipment and instrumentation used during the event, along with calibration data, is not needed for the test report. However, the contractor should be prepared to provide this information should the COTR request it.

3. DATA SHEETS

Data sheets are provided as tools to document test data in the final test report format outlined in the previous section. The Contractor is not restricted from using other tools or expanding the data sheets provided in this section. Nevertheless, for consistency and uniformity in reporting data, the Contractor must present the data in the order outlined in this Section.

DATA SHEET NO. 1 - GENERAL TEST AND VEHICLE PARAMETER DATA

Test Vehicle: _____ NHTSA No.:_____
Test Program: _____ Test Date: _____

TEST VEHICLE INFORMATION

NHTSA No.	
Model Year	
Make	
Model	
Body Style	
VIN	
Body Color	
Odometer Reading (km/mi)	
Engine Displacement (L)	
Type/No. Cylinders	
Engine Placement	
Transmission Type	
Transmission Speeds	
Overdrive	
Final Drive	
Roof Rack	
Sunroof/T-Top	
Running Boards	
Tilt Steering Wheel	
Power Seats	
Anti-Lock Brakes (ABS)	
Automatic Door Locks (ADLs)	

TEST VEHICLE OPTIONS

Traction Control System (TCS)	
Power Steering	
Power Window Auto-Reverse	
Driver Frontal Airbag	
Driver Curtain Airbag	
Driver Head/Torso Airbag	
Driver Torso Airbag	
Driver Torso/Pelvis Airbag	
Driver Pelvis Airbag	
Driver Knee Airbag	
Front Pass. Frontal Airbag	
Front Pass. Curtain Airbag	
Front Pass. Head/Torso Airbag	
Front Pass. Torso Airbag	
Front Pass. Torso/Pelvis Airbag	
Front Pass. Pelvis Airbag	
Front Pass. Knee Airbag	
Driver Pretensioner	
Driver Load Limiter	
Front Pass. Pretensioner	
Front Pass. Load Limiter	
Other	

Does owner's manual provide instructions to turn off automatic door locks? [ ]

DATA FROM CERTIFICATION LABEL

Manufactured By	
Date of Manufacture	

GVWR (kg)	
GAWR Front (kg)	
GAWR Rear (kg)	

VEHICLE SEATING AND WEIGHT CAPACITY

Measured Parameter	Front	Rear	Third	Total
Type of Seats				
Number of Occupants				
Capacity Wt. (VCW) (kg)				
Cargo Wt. (RCLW) (kg)				

DATA SHEET NO. 1 (CONTINUED) - GENERAL TEST AND VEHICLE PARAMETER DATA

Test Vehicle: _____ NHTSA No.:_____
Test Program: _____ Test Date: _____

Collect items circled in red, tire manufacturer, and tire name.

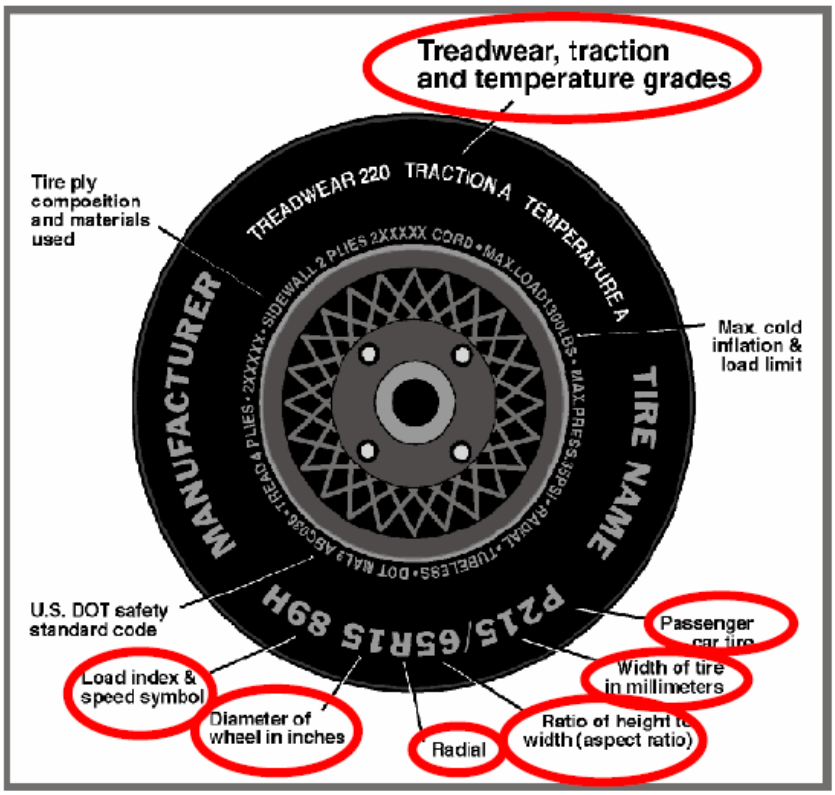

Measured Parameter	Front	Rear
Maximum Tire Pressure (kPa)		
Cold Pressure (kPa)		
Recommended Tire Size		
Tire Size on Vehicle		
Tire Manufacturer		
Tire Model		
Treadwear		
Traction		
Temperature Grades		
Tire Plies Sidewall		
Tire Plies Body		
Load Index/Speed Symbol		
Tire Material		
DOT Safety Code Left		
DOT Safety Code Right		

DATA SHEET NO. 1 (CONTINUED) - GENERAL TEST AND VEHICLE PARAMETER DATA

Test Vehicle: _____ NHTSA No.:_____
Test Program: _____ Test Date: _____

TEST VEHICLE WEIGHTS

	Units	As Delivered (UVW) (Axle)			As Tested (ATW) (Axle)		
		Front	Rear	Total	Front	Rear	Total
Left	kg						
Right	kg						
Ratio	%						
Totals	kg						

TARGET TEST WEIGHT CALCULATION

Measured Parameter	Units	Value
Total Delivered Weight (UVW)	kg	
Weight of 1 P572E ATD & 1 P572O ATD	kg	
Rated Cargo/Luggage Weight (RCLW)	kg	
Calculated Vehicle Target Weight (TVTW)	kg	

TEST VEHICLE ATTITUDES AND CG

	Units	LF	RF	LR	RR	CG (aft of front axle)
As Delivered	mm					
As Tested	mm					
Post Test	mm					

GENERAL TEST VEHICLE DATA

Measurement Description	Units	Value
Total Vehicle Wheel Base	mm	
Total Vehicle Length at Left Side	mm	
Total Vehicle Length at Centerline	mm	
Total Vehicle Length at Right Side	mm	
Weight of Ballast in Cargo Area	kg	
Weight of Vehicle Components Removed	kg	
Amount of Stoddard Solvent in Fuel Tank	L	

LIST OF COMPONENTS REMOVED TO MEET TEST WEIGHT: _____

_____
_____
_____
_____

DATA SHEET NO.1 (CONTINUED) - GENERAL TEST AND VEHICLE PARAMETER DATA

Test Vehicle: _____ NHTSA No.: _____
Test Program: _____ Test Date: _____

TARGET VEHICLE STRUCTURAL MEASUREMENT

	Elements	Pre-Test (mm)
1	Total Length	
2	Total Width	
3	Bumper Top Height	
4	Bumper Bottom Height	
5	Longitudinal Member Top Height	
6	Distance Between Longitudinal Members	
7	Longitudinal Member Width	
8	Engine Top Height	
9	Engine Bottom Height	
10	Engine and Gearbox Width	
11	Front Bumper-Engine Distance	
12	Front Shock Absorber Fixing Height	
13	Bonnet Leading Edge Height	
14	Front Shock Absorber Fixing Width	
15	Front Bumper – Front Axle Distance	
16	Front Axle – A Pillar Distance	
17	A- Pillar – B-Pillar Distance	
18	B-Pillar – Rear Axle Distance	
19	B-Pillar – C-Pillar Distance	
20	Roof Sill Bottom Height	
21	Roof Sill Top Height	
22	Floor Sill Bottom Height	
23	Floor Sill Top Height	

DATA SHEET NO. 2 - SEAT ADJUSTMENT, FUEL SYSTEM, AND STEERING WHEEL

Test Vehicle: _____ NHTSA No.: _____
Test Program: _____ Test Date: _____

NOMINAL DESIGN RIDING POSITION

For adjustable driver and passenger seat backs. Please describe how to position the inclinometer to measure the seat back angle. Include description of the location of the adjustment latch detent, if applicable.

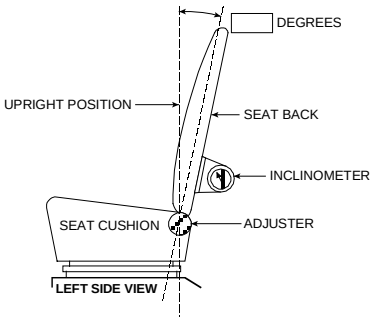

FRONT SEAT ASSEMBLY

	Deg.
Driver seat back angle:	
Passenger seat back angle:	

SEAT FORE/AFT POSITIONS

Describe the method used of determining seat fore/aft positions. _____
_____
_____

	Total Fore/Aft Travel	Placed in Position #
Driver Seat		
Passenger Seat		

SEAT BELT UPPER ANCHORAGE

Describe the method of positioning seat belt upper anchorages. _____
_____
_____

	Total # of Positions	Placed in Position #
Driver Seat		
Passenger Seat		

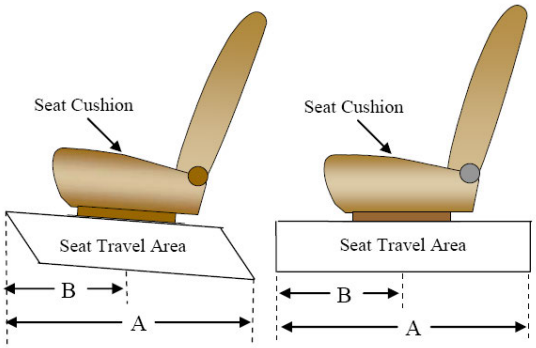

DATA SHEET NO. 2 (CONTINUED) - SEAT ADJUSTMENT, FUEL SYSTEM, AND STEERING WHEEL DATA

Test Vehicle: _____ NHTSA No.: _____
Test Program: _____ Test Date: _____

FUEL TANK CAPACITY

	Liters
Usable Capacity of "Standard Tank"	
Usable Capacity of "Optional Tank"	
92%-94% of Usable Capacity	
Actual Amount of Solvent Used	
1/3 of Usable Capacity	

Describe the fuel system - what type of fuel pump, details about how it operates, etc.

_____
_____
_____
_____
_____

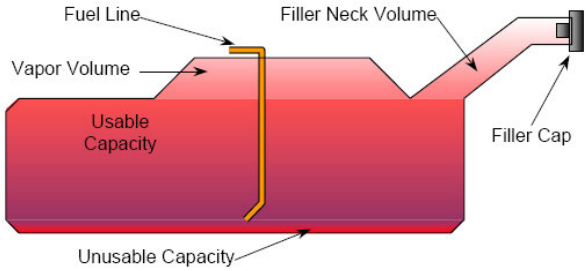

VEHICLE FUEL TANK ASSEMBLY

STEERING COLUMN ADJUSTMENT

Steering wheel and column adjustments are made so that the steering wheel hub is at the geometric center of the locus it describes when moved through its full range of motion. Describe how this measurement was taken.

_____
_____
_____
_____
_____

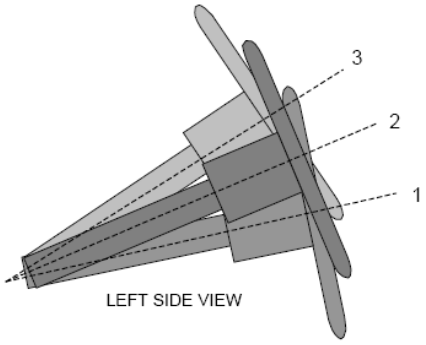

STEERING COLUMN ASSEMBLY

STEERING COLUMN POSITIONS

	Degrees	Fore/Aft Position (mm)
Lowermost position No. 1		
Geometric center position No. 2		
Uppermost position No. 3		
Telescoping Steering Wheel Travel		
Test Position		

DATA SHEET NO. 3 - DUMMY LONGITUDINAL CLEARANCE DIMENSIONS

Test Vehicle: _____ NHTSA No.: _____

Test Program: _ Test Date: _____

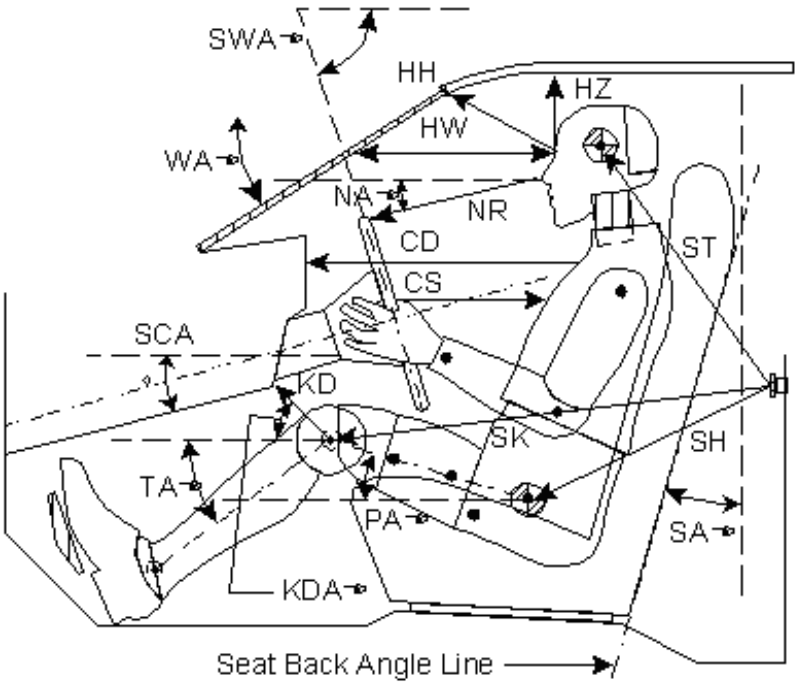

Code	Measurement Description	Driver		Passenger	
		Length (mm)	Angle(°)	Length (mm)	Angle (°)
WAº	Windshield Angle				
SWAº	Steering Wheel Angle				
SCAº	Steering Column Angle				
SAº	Seat Back Angle (on headrest post)				
HZ	Head to Roof (Z)				
HH	Head to Header				
HW	Head to Windshield				
NR	Nose to Rim				
CD	Chest to Dash				
CS	Chest to Steering Hub				
RA	Rim to Abdomen				
KDL	Left Knee to Dash				
KDR	Right Knee to Dash				
PAº	Pelvic Angle				
TAº	Tibia Angle				
SK	Striker to Knee				
ST	Striker to Head				
SH	Striker to H-Point				

DATA SHEET NO. 4 - DUMMY LATERAL CLEARANCE DIMENSIONS

Test Vehicle: _____ NHTSA No.: _____
Test Program: _____ Test Date: _____

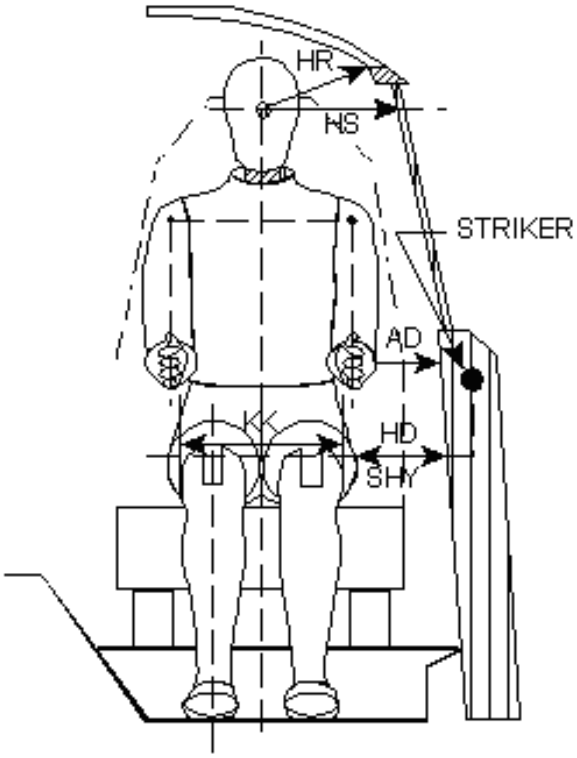

Code	Description	Driver	Passenger
AD	Arm to Door		
HD	H-Point to Door		
HR	Head to Side Header		
HS	Head to Side Window		
KK	Knee to Knee		
SHY	Striker to H-Point (Y Direction)		
AA	Ankle to Ankle		

DATA SHEET NO. 5 - SEAT BELT POSITIONING DATA

Test Vehicle: _____ NHTSA No.: _____
Test Program: _____ Test Date: _____

SEAT BELT POSITIONING DATA

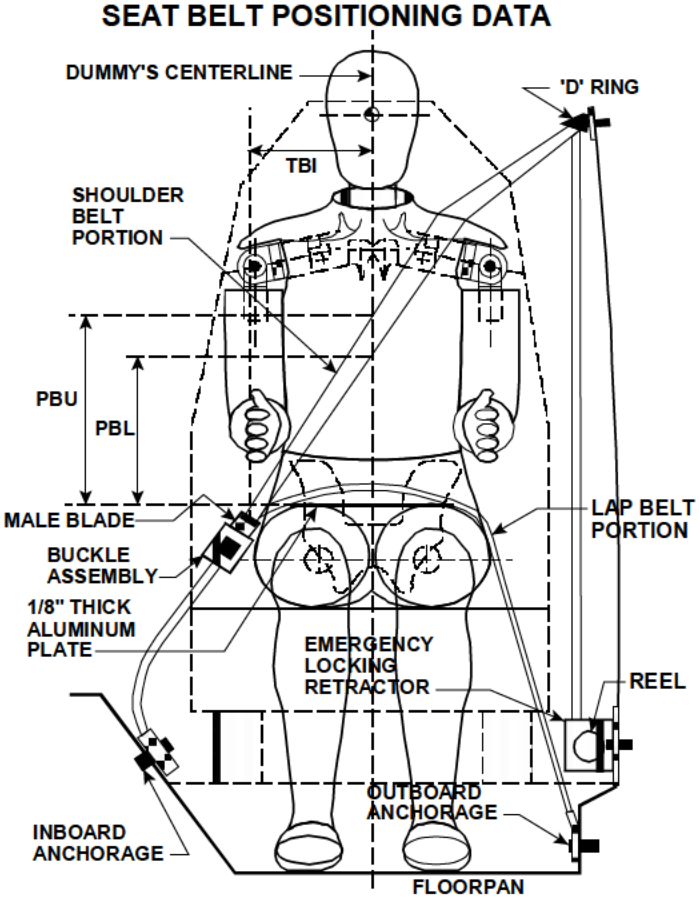

FRONT VIEW OF DUMMY

SEAT BELT POSITIONING MEASUREMENTS

Measurement Description	Units	Driver	Passenger
PBU — Top surface of reference to belt upper edge	mm		
PBL — Top surface of reference to belt lower edge	mm		

BELT LENGTH DATA

Measurement Description	Units	Driver	Passenger
Shoulder belt length as measured on ATD	mm		
Lap Belt Length as measured on ATD	mm		
Remainder of belt on reel	mm		
Total belt length for continuous webbing systems	mm		

DATA SHEET NO. 6 - HIGH-SPEED CAMERA LOCATIONS AND DATA

Test Vehicle: _____ NHTSA No.: _____
Test Program: _____ Test Date: _____

CAMERA POSITIONS FOR FRONTAL IMPACTS

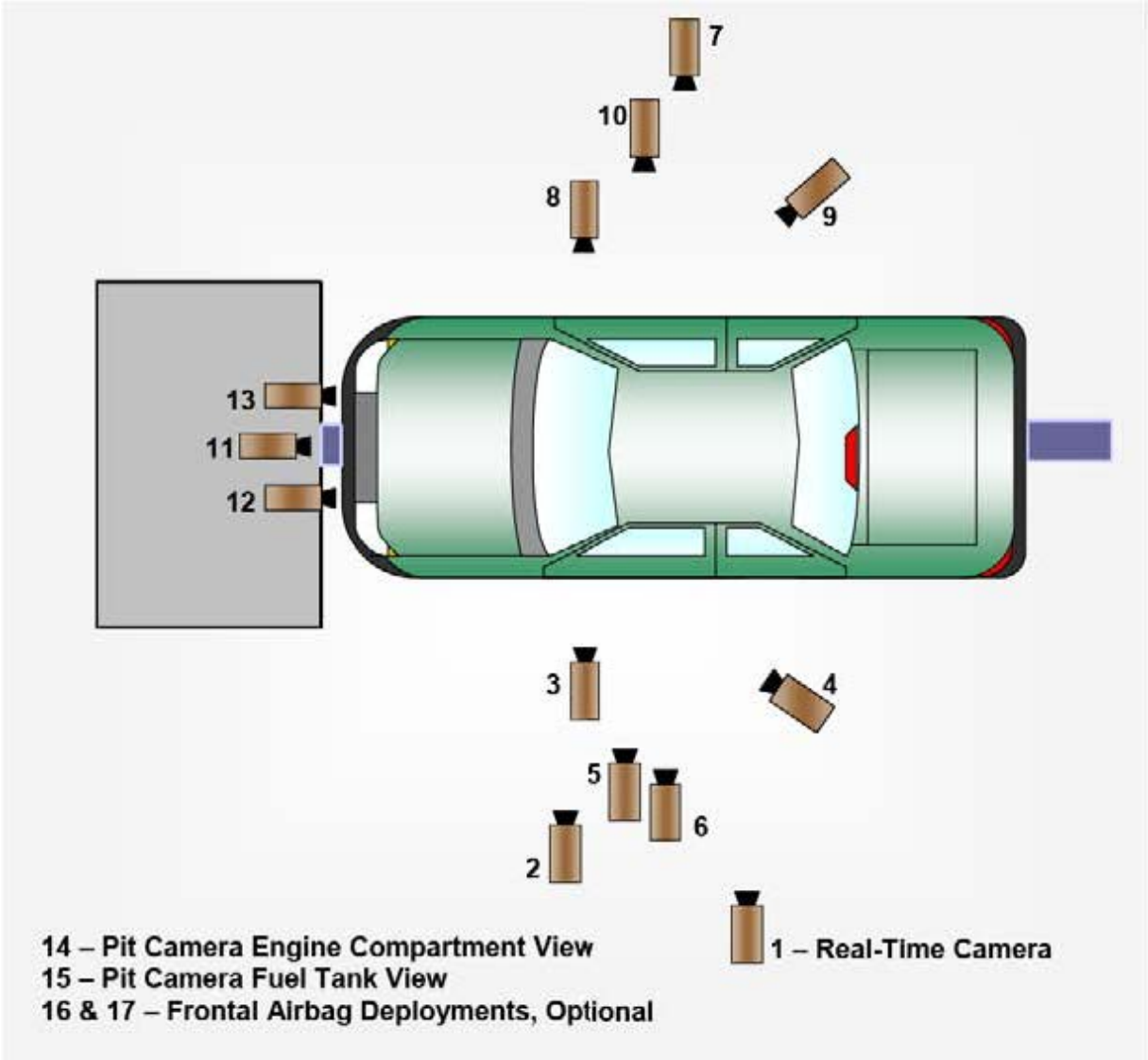

DATA SHEET NO. 6 (CONTINUED) - HIGH-SPEED CAMERA LOCATIONS AND DATA

Test Vehicle: _____ NHTSA No.: _____

Test Program: _____ Test Date: _____

CAMERA LOCATIONS

No.	Camera View	Location (mm)			Lens (mm)	Speed (fps)
		X	Y	Z		
1	Real-Time Left Overall					
2	Driver Close-Up					
3	Left Front Half					
4	Left Angle					
5	Steering Column - Top					
6	Steering Column - Bottom					
7	Right Overall					
8	Passenger Close-Up					
9	Right Angle					
10	Right Front Half					
11	Windshield					
12	Driver Windshield					
13	Passenger Windshield					
14	Pit Front					
15	Pit Rear					
16	Onboard Driver Airbag (Optional)					
17	Onboard Passenger Airbag (Optional)					

* COORDINATES:

+X = forward of impact plane
+Y = right of monorail center
+Z = into ground

DATA SHEET NO. 7 - VEHICLE ACCELEROMETER DATA

Test Vehicle: _____ NHTSA No.: _____
Test Program: _____ Test Date: _____

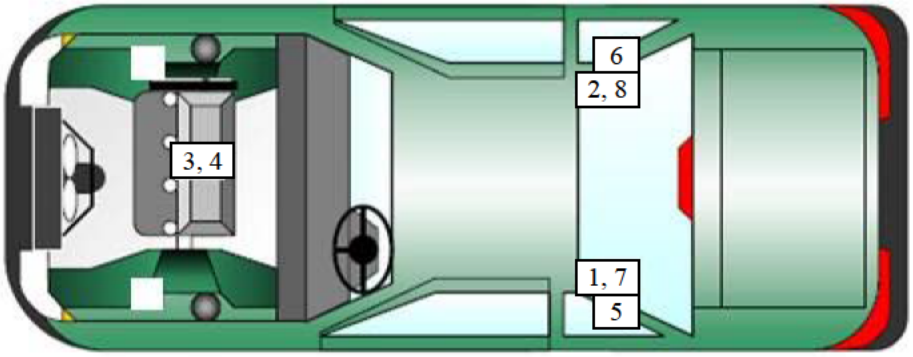

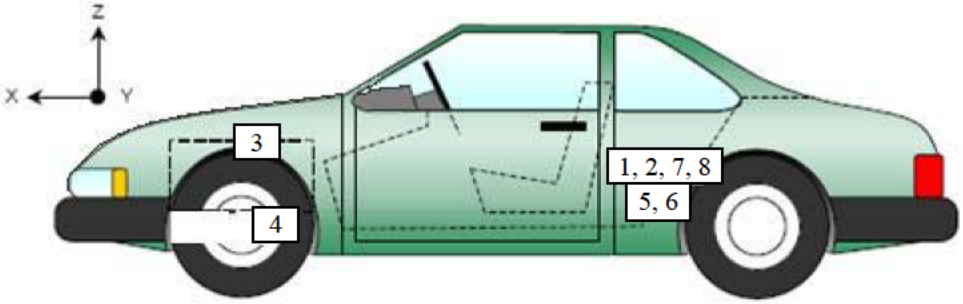

VEHICLE ACCELEROMETER PRE-TEST LOCATIONS

No.	Accelerometer Location	Measurements (mm)		
		X	Y	Z
1	Left Rear Accelerometer - x Direction			
2	Right Rear Accelerometer - x Direction			
3	Engine Top x			
4	Engine Bottom x			
5	Left Rear Accelerometer – z Direction			
6	Right Rear Accelerometer – z Direction			
7	Left Rear Accelerometer – x Direction Redundant			
8	Right Rear Accelerometer- x Direction Redundant			

Reference Points: x – Rear Surface of Vehicle (+ forward)
y – Vehicle Centerline (+ to right)
z – Ground Plane (+ down)

DATA SHEET NO. 8 - PHOTOGRAPHIC REFERENCE TARGET LOCATIONS

Test Vehicle: _____ NHTSA No.: _____
Test Program: _____ Test Date: _____

Item	Value
A	
B	
C	
D	
E	
F	
G	
H	
I	
J	
K	
L	
M	
N	
O	
P	
Q	

All units in millimeters

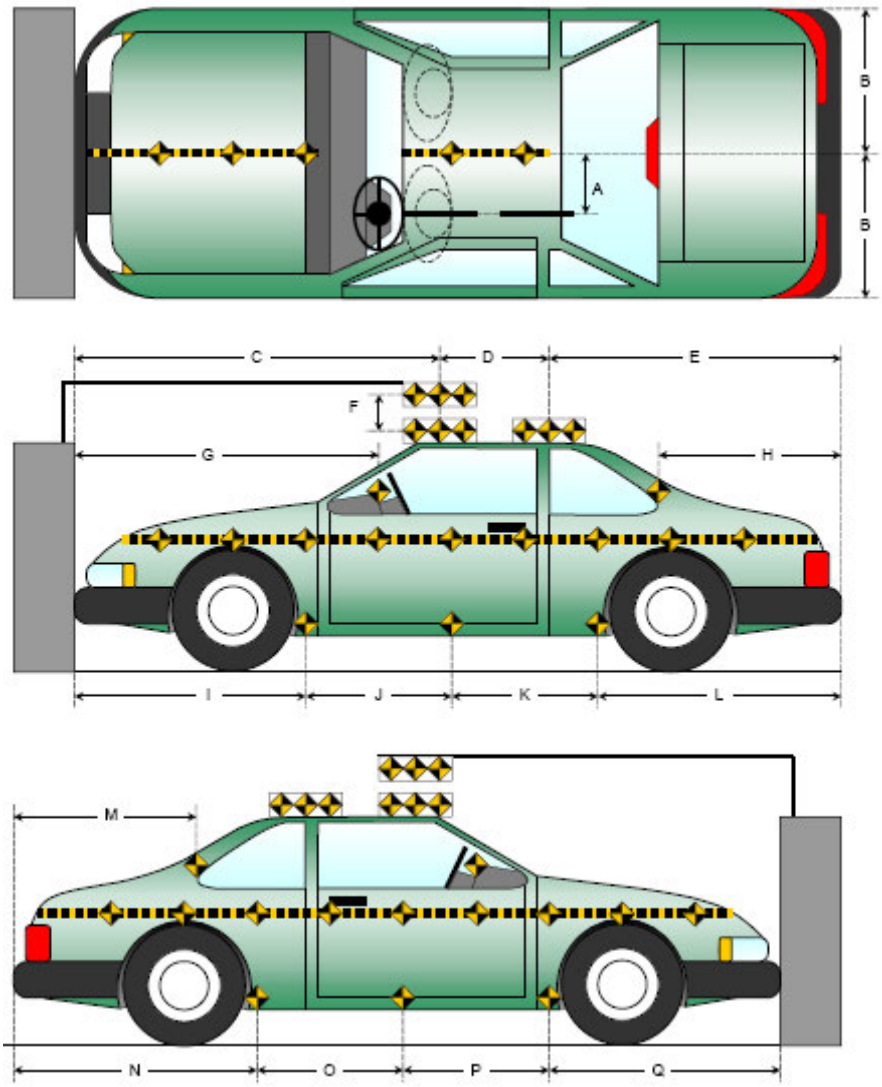

DATA SHEET NO. 9 - LOAD CELL LOCATIONS ON FIXED BARRIER

Test Vehicle: _____ NHTSA No.: _____

Test Program: _____ Test Date: _____

Insert Schematic of Load Cell Barrier as Applicable

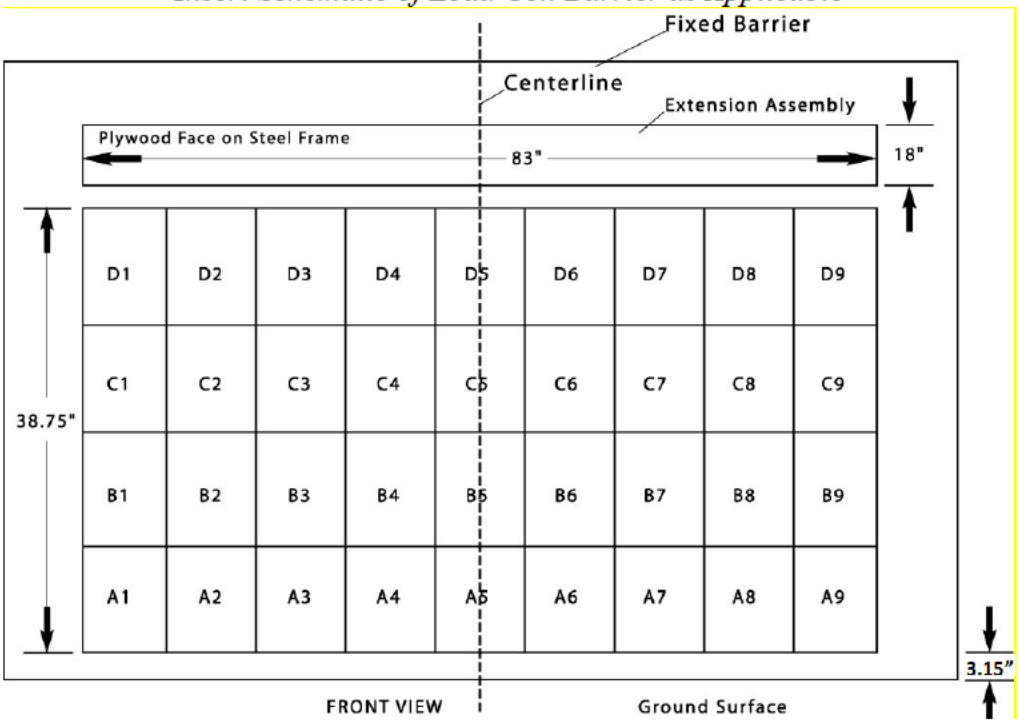

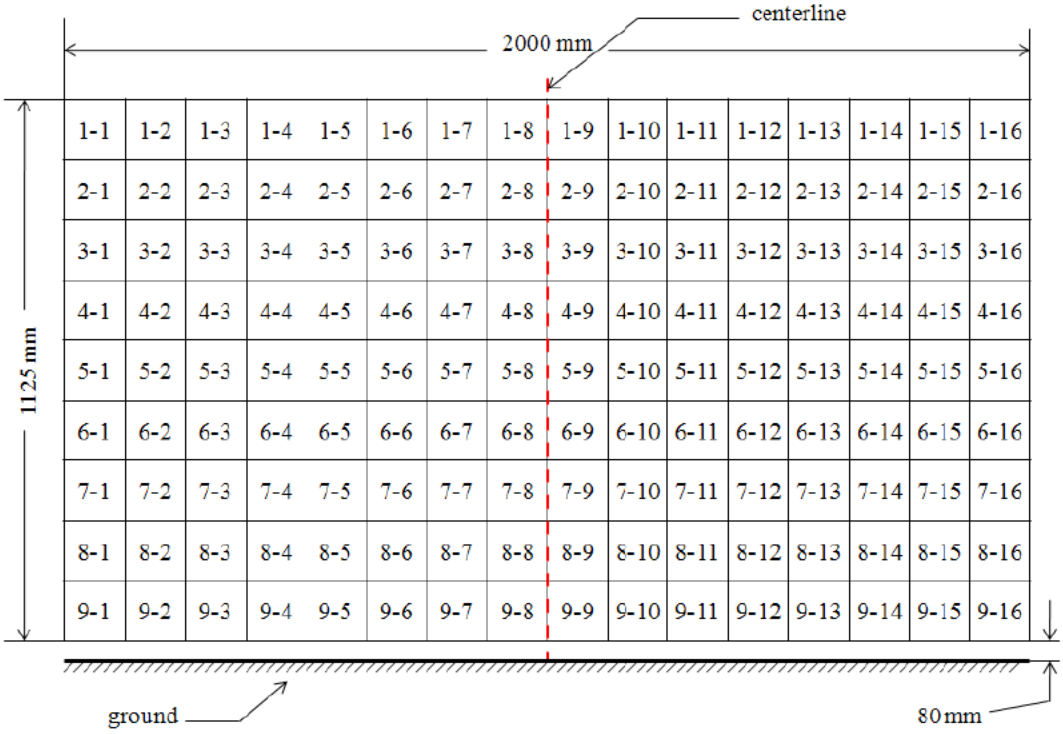

DATA SHEET NO. 10 -TEST VEHICLE SUMMARY OF RESULTS

Test Vehicle: _____ NHTSA No.: _____
Test Program: _____ Test Date: _____

INSTRUMENTATION

Instrumentation	Number of Channels Collected
Driver Dummy Accelerometers	
Passenger Dummy Accelerometers	
Vehicle Structure Accelerometers	
Total	

CAMERA COVERAGE

Type of Camera	Number Used in this Test
High-Speed Vehicle Onboard	
High-Speed Offboard	
Real-Time Panning	
Total	

DATA SHEET NO. 11 - POST-TEST OBSERVATIONS

Test Vehicle: _____ NHTSA No.: _____

Test Program: _____ Test Date: _____

TEST DUMMY INFORMATION AND CONTACT LOCATIONS

Description	Driver	Passenger
Dummy Type/Serial No.		
Head Contact		
Upper Torso Contact		
Lower Torso Contact		
Left Knee Contact		
Right Knee Contact		

DOOR OPENING AND SEAT TRACK INFORMATION

Description	Driver	Passenger
Locked/Unlocked Doors		
Front Door Opening		
Rear Door Opening		
Seat Track Shift (mm)		
Seat Back Failure		

POST-TEST STRUCTURAL OBSERVATIONS

Critical Areas of Performance	Observations and Conclusions
Windshield Damage	
Window Damage	
Other Notable Effects	

VEHICLE REBOUND FROM BARRIER

Measured Parameter	Units	Value
Left Side	mm	
Center	mm	
Right Side	mm	
Average	mm	

SUPPLEMENTAL RESTRAINT SYSTEM INFORMATION

Restraint Type	Driver (Occupant 1)		Passenger (Occupant 2)	
	Installed	Deployed	Installed	Deployed
Front Airbag				
Indicate side airbag type in vehicle				
Indicate side airbag type in vehicle				
Knee Airbag				
Seat Belt Pretensioner				
Seat Belt Load Limiter				
Other				

DATA SHEET NO. 12 - VEHICLE PROFILE MEASUREMENTS

Test Vehicle: _____ NHTSA No.: _____

Test Program: _____ Test Date: _____

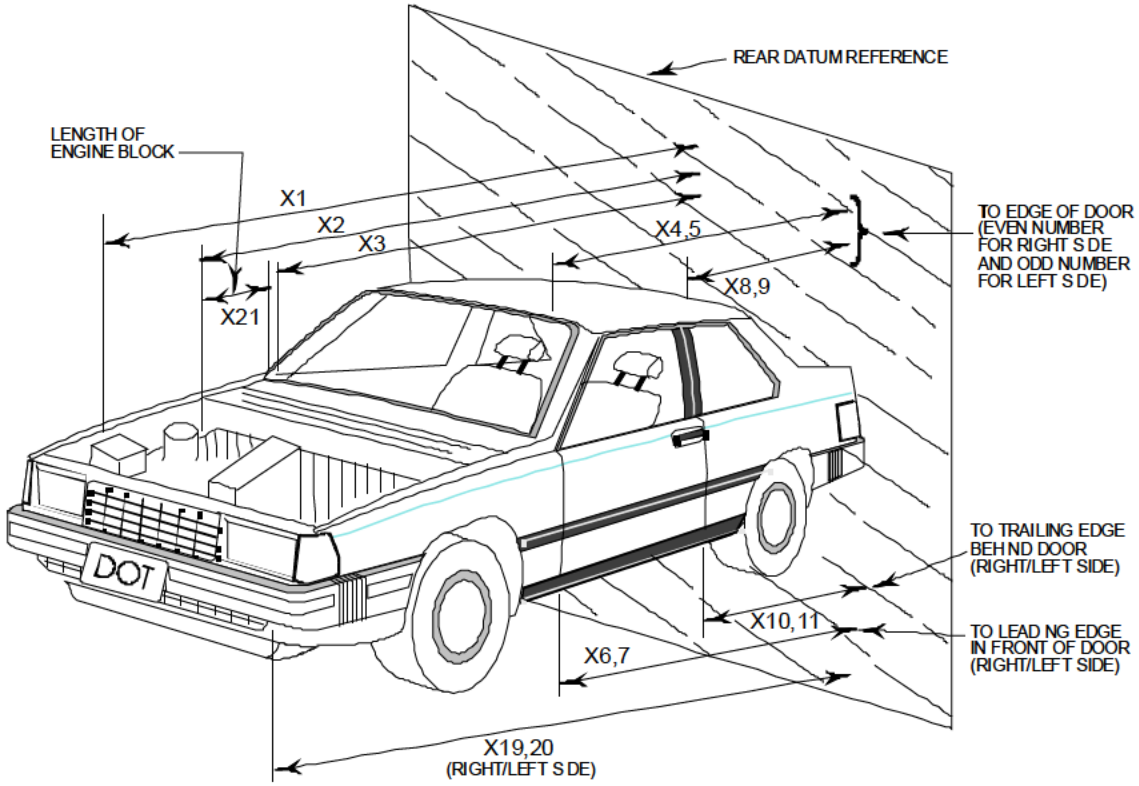

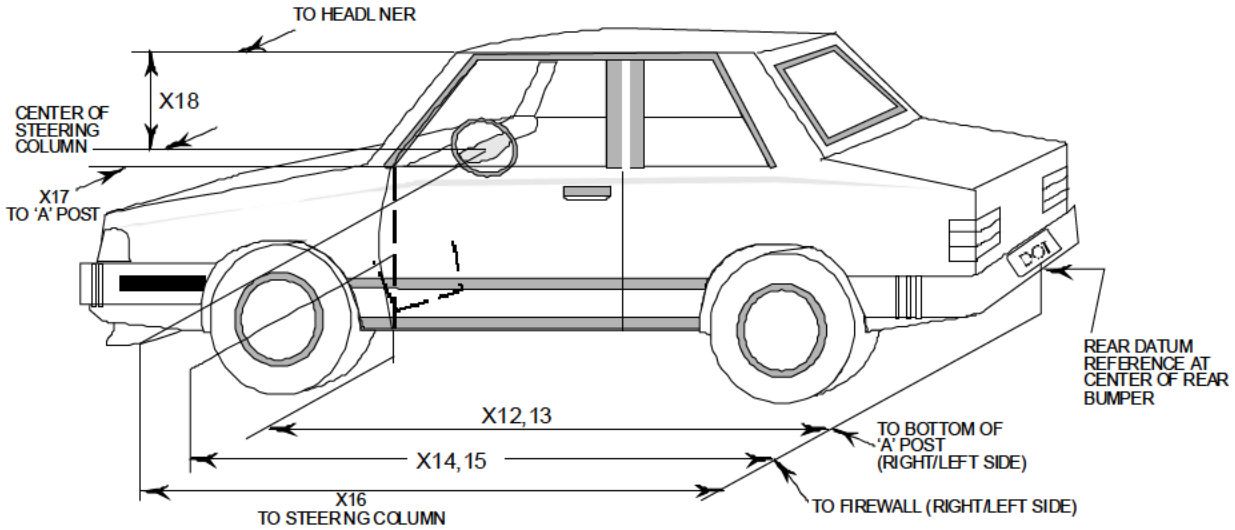

DATA SHEET NO. 12 (CONTINUED) - VEHICLE PROFILE MEASUREMENTS

Test Vehicle: _____ NHTSA No.: _____
Test Program: _____ Test Date: _____

No.	Measurement Description	Pre-Test	Post-Test	Difference
1	Total Length of Vehicle at Centerline			
2	Rear Surface of Vehicle (RSOV) to Front of Engine			
3	RSOV to Firewall			
4	RSOV to Upper Leading Edge of Right Door			
5	RSOV to Upper Leading Edge of Left Door			
6	RSOV to Lower Leading Edge of Right Door			
7	RSOV to Lower Leading Edge of Left Door			
8	RSOV to Upper Trailing Edge of Right Door			
9	RSOV to Upper Trailing Edge of Left Door			
10	RSOV to Lower Trailing Edge of Right Door			
11	RSOV to Lower Trailing Edge of Left Door			
12	RSOV to Bottom of “A” Post of Right Side			
13	RSOV to Bottom of “A” Post of Left Side			
14	RSOV to Firewall, Right Side			
15	RSOV to Firewall, Left Side			
16	RSOV to Steering Column			
17	Center of Steering Column to “A” Post			
18	Center of Steering Column to Headliner			
19	RSOV to Right Side of Front Bumper			
20	RSOV to Left Side of Front Bumper			
21	Length of Engine Block			
RD	RSOV to Right Side of Dash Panel			
CD	RSOV to Center of Dash Panel			
LD	RSOV to Left Side of Dash Panel			

All Dimensions in mm

DATA SHEET NO. 13 - ACCIDENT INVESTIGATION DIVISION DATA

Test Vehicle: _____ NHTSA No.: _____
Test Program: _____ Test Date: _____

VEHICLE INFORMATION

VIN: _____ Wheelbase: _____
Vehicle Size Category: _____ Test Weight (kg): _____

ACCELEROMETER DATA

Accelerometer Locations: _____
Cal. Procedure/Interval: _____
Integration Algorithm: _____
Linearity: _____
Impact Velocity (km/h): _____
Velocity Change (km/h): _____
Time of Separation (ms): _____

CRUSH PROFILE

Collision Deformation Classification: _____
Midpoint of Damage: _____
Damage Region Length (mm): _____
Impact Mode: _____

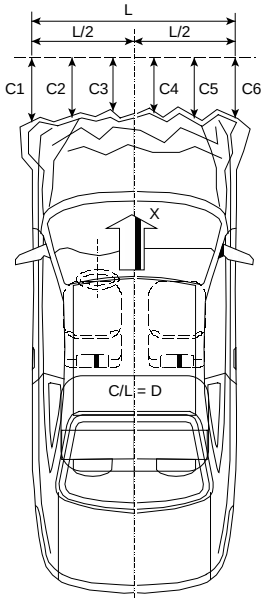

No.	Measurement Description	Units	Pre-Test	Post-Test	Difference
C1	Crush zone 1 at left side	mm			
C2	Crush zone 2 at left side	mm			
C3	Crush zone 3 at left side	mm			
C4	Crush zone 4 at right side	mm			
C5	Crush zone 5 at right side	mm			
C6	Crush zone 6 at right side	mm			
L	C1 to C6	mm			

DATA SHEET NO. 14 - VEHICLE INTRUSION MEASUREMENTS

Test Vehicle: _____ NHTSA No.: _____
Test Program: _____ Test Date: _____

DOOR OPENING WIDTH

Item	Description	Units	Pre-Test	Post-Test	Difference
A	**Left Side Upper**	mm			
B	**Left Side Lower**	mm			
D	**Right Side Upper**	mm			
E	**Right Side Lower**	mm			

WHEELBASE MEASUREMENTS

Item	Description	Units	Pre-Test	Post-Test	Difference
C	**Left Side Wheelbase**	mm			
F	**Right Side Wheelbase**	mm			

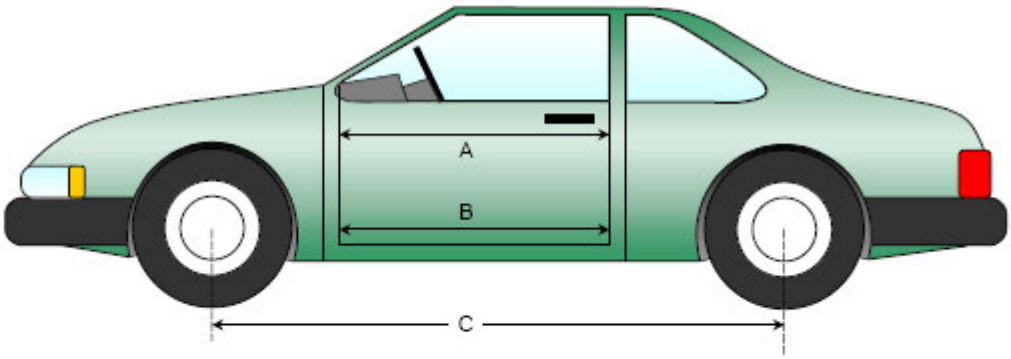

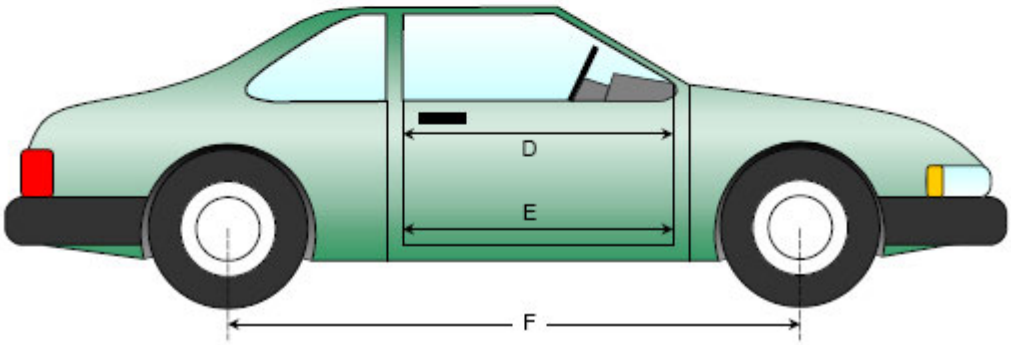

DATA SHEET NO.14 (CONTINUED) - VEHICLE INTRUSION MEASUREMENTS

Test Vehicle: _____ NHTSA No.: _____
Test Program: _____ Test Date: _____

DRIVER COMPARTMENT INTRUSION

Item	Description	Units	Pre-Test	Post-Test	Difference
AB	Door Opening (Inside Window Jam)	mm			
CX	Left Knee Bolster to X	mm			
DX	Right Knee Bolster to X	mm			
EX	Brake Pedal to X	mm			
FX	Foot Rest to X	mm			
GX	Center of Steering Column Wheel Hub to X	mm			

X = Front of Seat Track (Stationary)

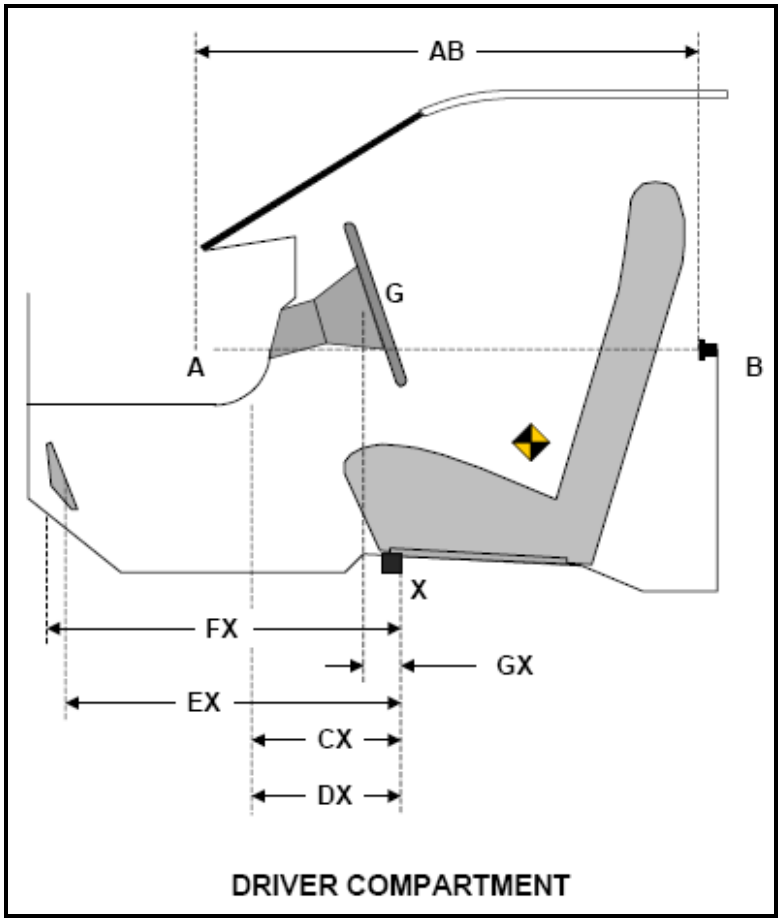

DATA SHEET NO. 15 - SUMMARY OF FMVSS 212, 219 (PARTIAL), AND 301 DATA

Test Vehicle: _____ NHTSA No.: _____
Test Program: _____ Test Date: _____

Please provide windshield mounting details. _____
_____

The standard requires that the post-test retention measurement be a minimum of 75% of the pre-test total periphery measurement for vehicles not equipped with occupant passive restraints and 50% for each side of the windshield for vehicles which are equipped with occupant passive restraints.
Temperature of windshield molding during test: _____

WINDSHIELD PERIPHERY MEASUREMENTS

Measurement	Pre-Test (mm)	Post-Test (mm)	% Retention
Left Side			
Right Side			
Total			

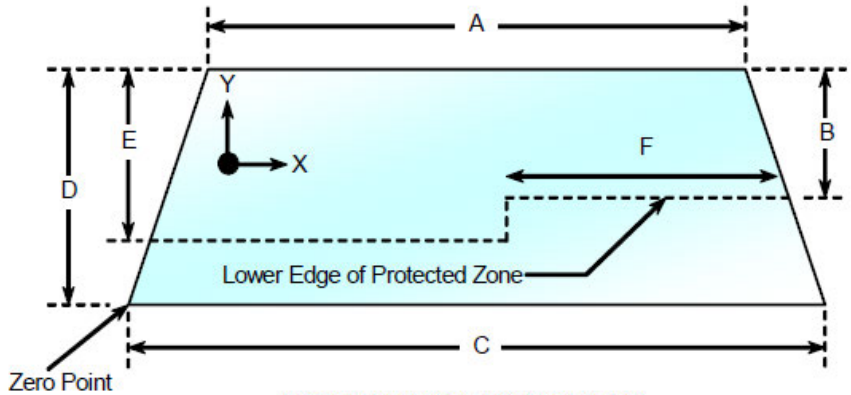

FRONT VIEW OF WINDSHIELD

Item	Units	Value
A	mm	
B	mm	
C	mm	
D	mm	
E	mm	
F	mm	

AREAS OF PROTECTED ZONE FAILURES

A. Provide coordinates of the area that the protected zone was penetrated more than .25 inches by a vehicle component other than one that is normally in contact with the windshield.

X	Y

B. Provide coordinates of the area beneath the protected zone that the inner surface of the windshield was penetrated by a vehicle component.

X	Y

DATA SHEET NO. 15 (CONTINUED) - SUMMARY OF FMVSS 212, 219 (PARTIAL), AND 301 DATA

Test Vehicle: _____ NHTSA No.: _____
Test Program: _____ Test Date: _____

FMVSS 301 FUEL SYSTEM INTEGRITY POST IMPACT DATA

Temperature at Time of Impact: _____ Test Time: _____

Stoddard Solvent Spillage Measurements

A. From impact until vehicle motion ceases: _____ oz.
(maximum allowable = 1 oz.)
B. For the 5-minute period after motion ceases: _____ oz.
(maximum allowable = 5 oz.)
C. For the following 25 minutes: _____ oz.
(maximum allowable = 1 oz./minute)
D. Spillage: _____

DATA SHEET NO. 16 - FMVSS 301 STATIC ROLLOVER RESULTS

Test Vehicle: _____ NHTSA No.: _____

Test Program: _____ Test Date: _____

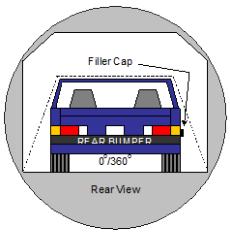

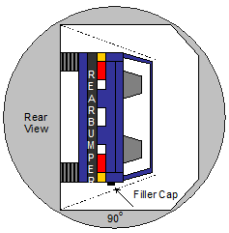

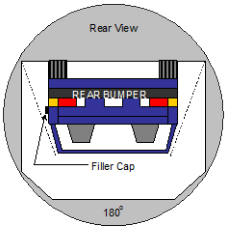

0° TO 90° 90° TO 180°

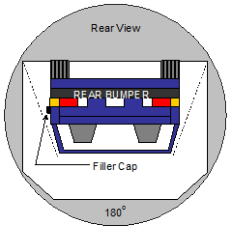

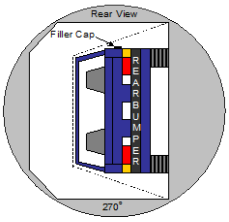

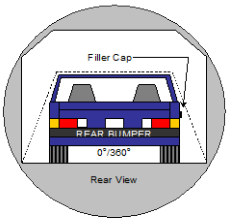

180° TO 270° 270° TO 360°

1. The specified fixture rollover rate for each 90° of rotation is 60 to 180 seconds.
2. The position hold time at each position is 300 seconds (minimum).
3. Details of Stoddard Solvent spillage: _____
   _____
   _____

SOLVENT COLLECTION TIME TABLE IN SECONDS

Test Phase	Rotation Time	Hold Time	Total Time
0° to 90°			
90° to 180°			
180° to 270°			
270° to 360°			

FMVSS 301 SPILLAGE TABLE

Test Phase	First 5 Minutes	Sixth Minute	Seventh Minute	Eighth Minute
0° to 90°				
90° to 180°				
180° to 270°				
270° to 360°				

SOLVENT SPILLAGE LOCATION TABLE

Test Phase	Spillage Location
0° to 90°	
90° to 180°	
180° to 270°	
270° to 360°	

DATA SHEET NO. 17 - DUMMY/VEHICLE TEMPERATURE STABILIZATION

Test Vehicle: _____ NHTSA No.: _____
Test Program: _____ Test Date: _____

Please place the temperature stabilization chart/data in this space.

4. FORMS

Forms, like Data Sheets, are provided as **tools** to use in the exchange of data between the COTR and the Contractor. Forms, unlike Data Sheets, **are not part** of the Final Test Report. The Contractor is not restricted from using other tools or expanding the forms outlined in this section.

A. FORM NO. 1 – Test Vehicle Information

A "Test Vehicle Information" form will be supplied by the COTR to the Contractor before testing preparation. Information on this form is supplied by the automobile manufacturer to aid in the initial test setup and shall be considered as **reference material**. After vehicle preparation is complete, the Test Vehicle Information form shall be discarded.

B. FORM NO. 2 – Vehicle Condition Report

A "Vehicle Condition Report" form must be submitted to the COTR with the copies of the Final Test Report. The first page of the form shall be completed when the test vehicle arrives at the testing laboratory. The second page of the form is completed after the test. The forms shall be **legible** (hand written forms are unacceptable) and **complete** (all information requested is filled out).

C. FORM NO. 3 – Laboratory Notice of Test Failure

A "Laboratory Notice of Test Failure" form will be submitted to the NHTSA COTR to report a test failure. The failure shall be described **thoroughly** in the space provided.

D. FORM NO. 4 – Monthly Vehicle Status Report

A "Monthly Vehicle Status Report" form shall be submitted to the COTR each month until all vehicles have been discarded.

E. FORM NO. 5 - Quicklook Report

A "Quicklook Report" of pertinent test data should be prepared and sent via e-mail to pertinent NHTSA personnel within twenty-four (24) hours of test completion.

FORM NO. 1 - TEST VEHICLE INFORMATION

NCAP Frontal, Side MDB, and Side Pole Tests

Vehicle Model Year and Make: _____

Vehicle Model and Body Style: _____

1. SEAT FORE-AFT POSITION, CUSHION ANGLE, AND HEIGHT

Provide instructions for positioning the driver, front outboard passenger, and rear left passenger seat(s) in their testing positions. Since seat positioning procedures differ between the Frontal NCAP 50th male and the Side NCAP 50th male, two diagrams are provided below to assist in positioning the seat. These diagrams assume that the seat will move forward if the seat cushion is moved upward in height.

SEAT POSITIONING FOR FRONTAL POSITIONING FOR ALL NCAP 50TH PERCENTILE MALE DUMMIES

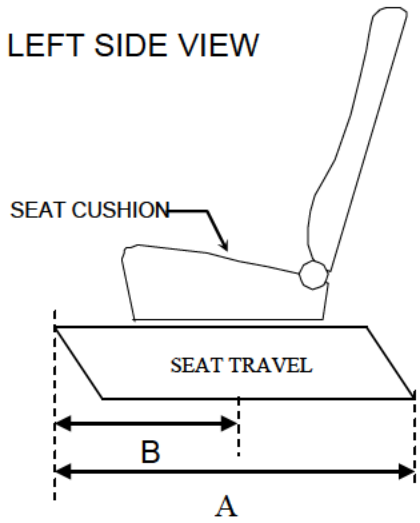

SEAT POSITIONING FOR OTHER NCAP

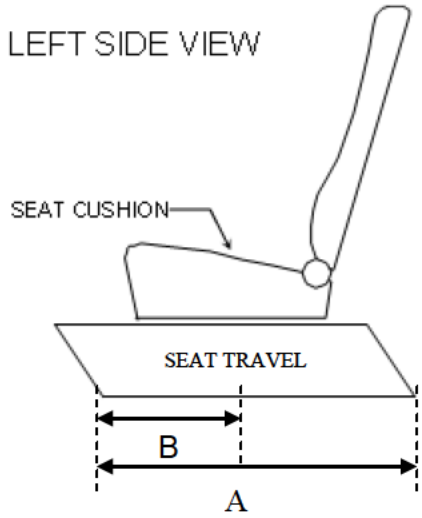

A = Total range of seat travel; B = Mid-track position

For more clarification regarding foremost and rearmost seat positions, please refer to FMVSS 208 S8.1.2 (50th Male Driver), FMVSS 208 S16.2.10.3 (5th Female Front Passenger), FMVSS 214 S8.3.1.3 (50th Male Driver), FMVSS 214 S10.3.2.3 (5th Female Driver), and FMVSS 214 S8.3.3.3 (5th Female Rear Passenger).

1.1 Driver's Seat

1.1A *Seat Fore-Aft Positioning*

Depending on the seat track adjuster type, complete one of the tables below.

Manual Seat Track Adjuster	
Total number of detents:	
Frontal impact test detent* (50th percentile male):	
Side impact test detent* (50th percentile male):	
Side impact test detent* (5th percentile female):	

***** *For manual seat track adjustments, test detent is measured from foremost detent, which is defined as 0.*

Power Seat Track Adjuster	
Complete range of travel as determined for Frontal NCAP (mm):	
Frontal impact test distance from the foremost position (50th percentile male):	
Complete range of travel as determined for Side NCAP (mm):	
Side impact test distance from the foremost position (50th percentile male):	
Side impact test distance from the foremost position (5th percentile female):	

1.1B *Seat Cushion Angle*

If the seat cushion angle is adjustable while maintaining the test fore-aft seat track position, describe the angle used during certification testing and how to measure it. Include any reference points and photographs.

Dummy	Angle Used	Additional Description
Frontal Impact - 50th Male		
Side Impact – 50th Male		
Side Impact – 5th Female		

1.1C *Seat Cushion Height*

If the seat and/or seat cushion height is adjustable at the test fore-aft seat track position and can be adjusted so that the seat cushion angle can be at the angle used in the

certification test, describe the height used during certification testing and how to measure it. Include any reference points and photographs.

Dummy	Height Used	Additional Description
Frontal Impact - 50th Male		
Side Impact – 50th Male		
Side Impact – 5th Female		

1.1D Provide any other instructions for positioning the driver's seat at the required test position(s):

Frontal: _____

_____

Side MDB: _____

_____

Side Pole: _____

_____

1.2 **Front Outboard Passenger Seat** (5th percentile dummy in frontal impact only)

1.2A *Seat Fore-Aft Positioning*

Depending on the seat track adjuster type, complete one of the tables below.

Manual Seat Track Adjuster	
Total number of detents:	
Frontal impact test detent* (5th percentile female):	

***** *For manual seat track adjustments, test detent is measured from foremost detent, which is defined as 0.*

Power Seat Track Adjuster	
Complete range of travel (mm):	
Frontal impact test distance from the foremost position (5th percentile female):	

1.2B *Seat Cushion Angle*

If the seat cushion angle is adjustable while maintaining the test fore-aft seat track position, describe the angle used during certification testing and how to measure it. Include any reference points and photographs.

Dummy	Angle Used	Additional Description
Frontal Impact - 5th Female		

1.2C *Seat Cushion Height*

If the seat and/or seat cushion height is adjustable at the test fore-aft seat track position and can be adjusted so that the seat cushion angle can be at the angle used in the certification test, describe the height used during certification testing and how to measure it. Include any reference points and photographs.

Dummy	Angle Used	Additional Description
Frontal Impact - 5th Female		

1.2D Provide any other instructions for positioning the front passenger seat at the required test position:

Frontal: _____

_____

In addition, please indicate the manufacturer of the 5th percentile dummy used for FMVSS 208 crash test certification: _____

1.3 **Rear Seats** (5th percentile dummy in MDB side impact only)

1.3A *Seat Fore-Aft Positioning*

Depending on the seat track adjuster type, complete one of the tables below.

Manual Seat Track Adjuster	
Total number of detents:	
Side impact test detent* (5th percentile female):	

***** *For manual seat track adjustments, test detent is measured from foremost detent, which is defined as 0.*

Power Seat Track Adjuster	
Complete range of travel (mm):	
Side impact test distance from the foremost position (5th percentile female):	

1.3B *Seat Cushion Angle*

If the seat cushion angle is adjustable while maintaining the test fore-aft seat track position, describe the angle used during certification testing and how to measure it. Include any reference points and photographs.

Dummy	Angle Used	Additional Description
Side Impact - 5th Female		

1.3C *Seat Cushion Height*

If the seat and/or seat cushion height is adjustable at the test fore-aft seat track position and can be adjusted so that the seat cushion angle can be at the angle used in the certification test, describe the height used during certification testing and how to measure it. Include any reference points and photographs.

Dummy	Angle Used	Additional Description
Side Impact - 5th Female		

1.3D Provide any other instructions for positioning the rear seat at the required test position:

Side MDB: _____

_____

2. SEAT BACK ANGLE

2.1 Driver's Seat

With the seat in the test fore-aft seat track position, what is the angle of the seat back when it is in the forward-most locked position?

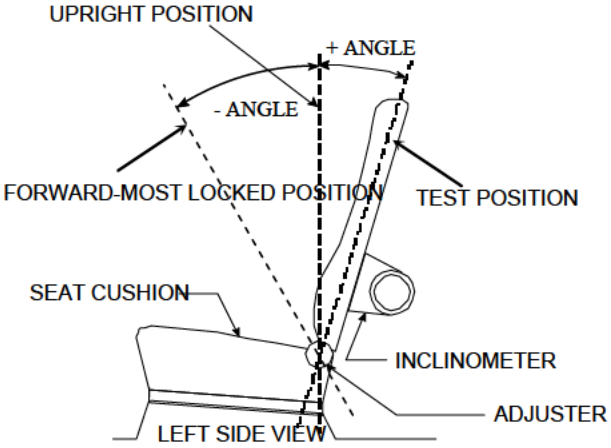

Dummy	Angle
Frontal Impact – 50th Male	
Side Impact – 50th Male	
Side Impact – 5th Female	

With the seat in the test fore-aft seat track position, what is the angle of the seat back when it is set to the **test** position? (Note: For the frontal impact test and the side impact test with the 50th male dummy, the seat back angle will be set to the Nominal Design Position. For the side impact test with the 5th female dummy, the seat back angle will be determined by the related dummy seating procedure.)

Dummy	Angle
Frontal Impact – 50th Male	
Side Impact – 50th Male	
Side Impact – 5th Female	

For the 50th percentile male, is the seat back angle measured with the dummy in the seat?

Frontal: ☐ YES ☐ NO
Side: ☐ YES ☐ NO

Describe any references used for measuring the seat back angle, e.g., door sill. (Include photograph(s).) *If possible, include measurement from bottom front of head rest post to outboard sun visor anchor, or from bottom back of head rest post to middle of rear door striker.*

Frontal: _____

Side MDB: _____

Side Pole: _____

2.2 Front Outboard Passenger Seat (5th percentile female in frontal impact only)

With the seat in the test seat track position, what is the angle of the seat back when it is in the forward-most locked position?

Dummy	Angle
Frontal Impact – 5th Female	

With the seat in the test seat track position, what is the angle of the seat back when it is set to the **test** position? (Note: The seat back angle will be determined by the related dummy seating procedure for the frontal impact test.)

Dummy	Angle
Frontal Impact – 5th Female	

Describe any references used for measuring the seat back angle, e.g., door sill. (Include photograph(s).) *If possible, include measurement from bottom front of head rest post to outboard sun visor anchor, or from bottom back of head rest post to middle of rear door striker.*

Frontal: _____

_____

Side MDB: _____
_____

Side Pole: _____
_____

2.3 **2nd Row Seat** (5th percentile female in side impact only)

With the seat in the test seat track position, what is the angle of the seat back when it is in the forward-most locked position?

Dummy	Angle
Side Impact – 5th Female	

With the seat in the test seat track position, what is the angle of the seat back when it is set to the **test** position? (Note: The seat back angle will be determined by the related dummy seating procedure for the side impact barrier test.)

Dummy	Angle
Side Impact – 5th Female	

Describe any references used for measuring the seat back angle, e.g., door sill. (Include photograph(s).)

_____
_____
_____
_____

2.4 **3rd Row Seat** (side impact only)

The seat should be set to accommodate a 5th percentile female dummy; however this dummy will not be part of the test(s).

With the seat in the test seat track position, what is the angle of the seat back when it is in the forward-most locked position?

Dummy	Angle
Side Impact – 5th Female	

With the seat in the test seat track position, what is the angle of the seat back when it is set to the **test** position? (Note: The seat back angle will be determined by the related dummy seating procedure for the side impact barrier test.)

Dummy	Angle
Side Impact – 5th Female	

Describe any references used for measuring the seat back angle, e.g., door sill. (Include photograph(s).)

_____
_____
_____
_____

3. ADJUSTABLE D-RING SEAT BELT ANCHORAGE POSITION

Nominal Design Position (NDP)

Please complete the following table for adjustable seat belt anchorages.

Dummy	Total Range of Travel (mm)	Dist. from Upper-most Position to NDP (mm)	Total No. of Detents (if applicable)	Detent No. of NDP*
Driver/Front Passenger - 50th Male				
Driver/Front Passenger – 5th Female				
Rear Passenger - 5th Female				

** The detent number of the Nominal Design Position is counted with respect to the upper-most detent, which is defined as 0.*

4. SEAT BELT GUIDES

Is this vehicle equipped with a seat belt guide for any of the following seating positions?

Driver:	☐ YES	☐ NO
Right Front Passenger:	☐ YES	☐ NO
Left Rear Passenger:	☐ YES	☐ NO

If YES for any position, please provide instructions for use:

_____
_____
_____

STEERING COLUMN ASSEMBLY

N58

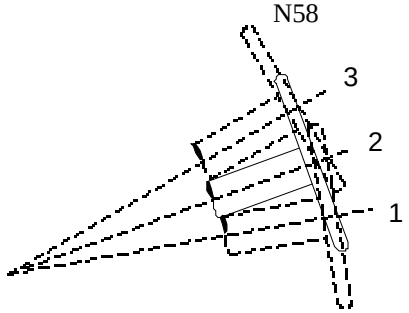

LEFT SIDE VIEW

5. STEERING COLUMN AND WHEEL ADJUSTMENTS

If the steering wheel and /or steering column adjustments are available, provide any specific procedures used to determine the geometric center of the locus the steering wheel hub describes when it is moved through its full range of driving positions.

_____

_____

_____

_____

_____

Angle of the steering wheel with respect to vertical when the steering wheel hub is positioned at the geometric center of the locus it describes when it is moved through its full range of positions:	
Total number of detents:	
Test detent* when the wheel hub is positioned at the geometric center of the locus it describes when it is moved through its full range of positions:	

** Test detent is taken with respect to the upper-most detent, which is defined as 0.*

6. SEATING REFERENCE POINT (SgRP)

Please give the location of the Seating Reference Point (SgRP) for each vehicle seating position.

Seating Position	Coordinates (mm)		
	X(+ forward)	Y(+ right)	Z (+ down)
Left Front (Driver)			
Right Front (Front Passenger)			
Left Second Row (Rear Passenger)			

Describe any references used for measuring the SgRP, e.g., center of the front door striker. (Include photograph(s).)

_____

_____

_____

_____

_____

7. DUMMY MEASUREMENTS FOR THE 50TH MALE AND 5TH FEMALE

See the attached instructions and diagram and provide measurements for the following seat configurations:

	HH	NR	CS	KDL/KDR	SH	SHY	HS
Driver (Manual Seat)							
Driver (Power Seat)							
Passenger (Manual Seat)							
Passenger (Power Seat)							
2nd Row Occupant (Side only)							

8. FUEL TANK CAPACITY DATA

"Usable capacity" of standard equipment fuel tank (gal):	
"Usable capacity" of optional equipment fuel tank (gal):	
Capacity used when certification testing to requirements of FMVSS No. 301 (gal):	

VEHICLE FUEL TANK ASSEMBLY

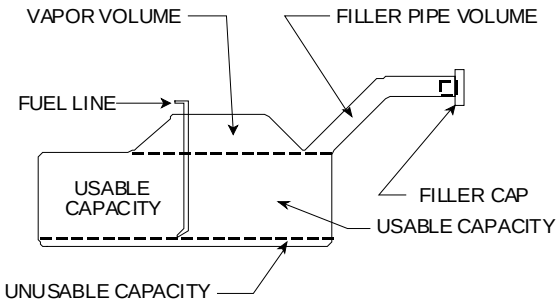

Operational instructions:

_____

_____

_____

Suggested methods for draining:

_____

_____

_____

Is the vehicle equipped with an electric fuel pump?

☐ YES ☐ NO

If YES, does the pump normally operate when the vehicle's electrical system is activated?

☐ YES ☐ NO

If YES, explain the vehicle operating conditions under which the fuel pump will pump fuel:

_____

_____
_____
_____

Provide a drawing (or description) that shows the undercarriage view and/or location of the fuel tank.

_____
_____

9. DEACTIVATION OF SIDE AIRBAGS

If this vehicle has side airbags, will they deploy in a Frontal NCAP test?

☐ YES ☐ NO

IF YES, please be prepared to disable the side airbags on test day in the event that NCAP requests they be deactivated for the Frontal test. If a representative will not be present, be sure to provide the laboratory with detailed instructions prior to test day.

If this vehicle has side airbags, will the side airbags on the non-struck side deploy in a Side MDB test?

☐ YES ☐ NO

IF YES, please be prepared to disable the non-struck side airbags on test day. If a representative will not be present, be sure to provide the laboratory with detailed instructions prior to test day.

If this vehicle has side airbags, will the side airbags on the non-struck side deploy in a Side Pole test?

☐ YES ☐ NO

IF YES, please be prepared to disable the side airbags on the non-struck side on test day. If a representative will not be present, be sure to provide the laboratory with detailed instructions prior to test day.

10. OCCUPANT CLASSIFICATION SYSTEMS

Are all related airbags activated when a 5th percentile female or 50th percentile male dummy is in the seat? (Please choose YES or NO for each.)

Frontal:	☐ YES	☐ NO
Side MDB:	☐ YES	☐ NO
Side Pole:	☐ YES	☐ NO

If NO, please provide system bypass information.

Frontal: _____

_____

_____

Side MDB: _____

_____

_____

Side Pole: _____

_____

_____

11. SHOULDER BELT LOAD CELL POSITIONING (Frontal NCAP)

Can a shoulder belt load cell be mounted on the seat belts?

☐ YES ☐ NO

If YES, please provide the following:

Distance from the Driver's side D-ring to the load cell centerline (mm):	
Distance from the Passenger's side D-ring to the load cell centerline (mm):	

12. HEIGHT ADJUSTABLE SUSPENSION

Does this vehicle have a height adjustable suspension? (Off-road modes that must be manually activated are not applicable.)

☐ YES ☐ NO

If YES, and the suspension does not automatically adjust to a default ride mode (comfort-ride, sport-ride, etc.) when the ignition is set to "on" (but, the engine is not running), please list and describe the ride mode options available on the vehicle, and discuss when and how they are activated.

_____

_____

_____

If YES above, designate ONE ride mode to be used for all three crash tests (frontal, side MDB, and side pole tests) and provide instructions for adjusting the test vehicle to that designated ride mode.

_____
_____
_____
_____

13. HEAD RESTRAINTS

Do any of the head restraints in this vehicle have a "non-use" position? Please note that "use" positions are defined in FMVSS No. 202a.

☐ YES ☐ NO

If YES, please indicate seating positions that apply and how to properly put the applicable head restraint(s) in the lowest "use" position.

_____
_____

14. EVENT DATA RECORDER (EDR) LOCATION

Please specify where the EDR is located and provide brief instructions for its removal. If available, please include a diagram.

_____
_____
_____
_____

15. LIST OF REMOVABLE PARTS

NCAP will remove the following parts if the target test weight cannot be achieved:

Frontal NCAP test: spare tire, rear door windows, rear radio speakers, interior door trim on the rear doors, rear seat cushions, outboard mirrors, taillights, rear bumper

Side NCAP tests: spare tire, rear radio speakers, interior door trim and windows on non-struck side, outboard mirrors on non-struck side, taillights, rear bumper

Please prioritize the items in this list in order of removal preference for each NCAP test. Please make a note of any parts that should not be removed because they serve as load bearing or structural components and therefore, will likely affect NCAP test performance. Also, please feel free to add additional items which are not listed if their removal is deemed acceptable.

Frontal NCAP test:

_____

_____

_____

Side MDB NCAP test:

_____

_____

_____

Side Pole NCAP test

_____

_____

_____

16. <u>SPECIAL INSTRUCTIONS</u>

Please make note of any special instructions that you would like NHTSA to consider or be made aware of for the tested vehicle (ex. towing setup, refrain from using seat belt load cells, etc.):

Frontal NCAP test:

_____

_____

Side MDB NCAP test:

_____

_____

Side Pole NCAP test:

_____

_____

DESCRIPTIONS OF DUMMY MEASUREMENTS

When a level is to be used, it is to ensure that the line containing the two points described is either parallel or perpendicular to the ground. If a measurement to be made is less than 10 inches ignore the directions to use a level and approximate a level measurement. Also, when a measurement is to be taken to or from the center of a bolt on the dummy, take the measurement from the center of the bolt hole if the bolt is recessed.

The following measurements are to be made within a vertical longitudinal plane.

HH - Head to Header, taken from the point where the dummy's nose meets his forehead (between his eyes) to the furthest point forward on the header.

CS - Steering Wheel to Chest, taken from the center of the steering wheel hub to the dummy's chest. Use a level.

NR - Nose to Rim, taken from the tip of the dummy's nose to the closest point on the top of the steering wheel rim. Also indicate the angle this line makes with respect to the horizontal (NA).

KDL, KDR - Left and Right Knees to Dashboard, taken from the center of the knee pivot bolt's outer surface to the closest point forward acquired by swinging the tape measure in continually larger arcs until it contacts the dashboard. Also reference the angle of this measurement with respect to the horizontal for the outboard knee (KDA).

SH - Striker to Hip, this measurement is to be taken in the X-Z plane measured from the forward most center point on the striker to the center of the H-point. When taking this measurement a firm device that can be rigidly connected to the striker should be used. The measurement in the Y (transverse) direction from the striker to the H-point should also be taken (SHY).

The following measurements are to be made within a vertical transverse plane.

HS - Head to Side Window, taken from the point where the dummy's nose meets his forehead (between his eyes) to the outside of the side window. In order to make this measurement, roll the window down to the exact height which allows a level measurement. Use a level.

SHY - Striker to H-point, taken from a rod rigidly connected to the forward most center point on the striker to the H-point. Use a level.

FORM NO. 2 - REPORT OF VEHICLE CONDITION

Contract Number:_____ Date:_____
From:_____ To:_____

The vehicle was inspected upon arrival at the laboratory for the test and found to contain all the equipment listed below. All variances have been reported within 2 working days of the vehicle arrival, by letter, to the NHTSA Industrial Property Manager with a copy to the COTR. The vehicle is again inspected, after the above test has been conducted, and all changes are noted below. The final condition of the vehicle is also noted in detail.

NHTSA No.		Anti-Lock Brakes	
Model Year		All-Wheel Drive	
Make		Power Steering	
Model		Driver Front Airbag	
Body Style		Driver Side Torso Airbag	
VIN		Driver Side Head Airbag	
Body Color		Driver Curtain Airbag	
Delivery Date		Driver Knee Airbag	
Odometer Reading (km/mi)		Driver Head/Torso Combo Airbag	
Dealer		Rear Pass. Front Airbag	
Transmission		Rear Pass. Side Torso Airbag	
Final Drive		Rear Pass. Side Head Airbag	
Type/No. Cylinders		Rear Pass. Curtain Airbag	
Engine Displacement (L)		Rear Pass. Combo Airbag	
Engine Placement		Pretensioners	
Roof Rack		Load Limiters	
Sunroof/T-Top		Air Conditioning	
Tinted Glass		AM/FM CD	
Traction Control		Tilt Steering	
Power Brakes		Automatic Door Locks	
Front Disc		Power Windows	
Rear Disc		Power Seats	
Other		Other	

PLEASE LIST OTHER PERTINENT OPTIONAL EQUIPMENT ON THE NEXT PAGE IN THE REMARKS SECTION.

FORM NO. 2 (CONTINUED)
REPORT OF VEHICLE CONDITION

Remarks:

_____
_____
_____

Equipment that is no longer on the test vehicle as noted on the previous page:

_____
_____
_____

Explanation for equipment removal:

_____
_____
_____

Test vehicle condition:

_____
_____
_____

	1		2		3	4	5
	Is Seat Track Movable?		**Is Adjacent Window in Good Condition?**		**Adjacent Door Works Properly/In Good Condition?**	**Is Seat Airbag Deployed?**	**Is Curtain Airbag Deployed?**
Position	Yes/No/NA	Power or Manual	Yes/No	Power or Manual	Yes/No/NA	Yes/No/NA	Yes/No/NA
Left Front (Driver)							
Right Front Passenger							
Right Rear Passenger							
Left Rear Passenger							

If "No" to Items 1-3 in table above, please describe the nature of the damage and if the damage is repairable/ replaceable:

_____
_____
_____

RECORDED BY:_____ DATE:_____
APPROVED BY: _____

FORM NO. 3 - LABORATORY NOTICE OF TEST FAILURE
FRONTAL IMPACT PROTECTION

TEST DATE: _____

LABORATORY: _____

CONTRACT NO: _____; DELV. ORDER NO: _____

LAB PROJECT ENGINEER'S NAME: _____

VEH.MY/MAKE/MODEL:_____

VEHICLE BODY STYLE: _____; BUILD DATE:_____

NHTSA NO.:_____; VIN:_____

DUMMY #:_____

TEST FAILURE DESCRIPTION:_____

_____

_____

S214 REQUIREMENT, PARAGRAPH §:_____

_____

_____

NOTIFICATION TO NHTSA (COTR):_____

DATE: _____ BY:_____

REMARKS:_____

_____

_____

FORM NO. 4 - MONTHLY VEHICLE STATUS REPORT

NCAP

DATE OF REPORT: _____

No.	Vehicle NHTSA No., Make and Model	Date of Delivery	Odometer Reading	Test Complete Date	Vehicle Shipment Date	Odometer Reading
1						
2						
3						
4						
5						
6						
7						
8						
9						
10						
11						
12						
13						
14						

FORM NO. 5 – SAMPLE QUICKLOOK REPORT

Laboratory Name and Logo

QUICKLOOK REPORT

56 km/h (35 mph) Frontal Impact NCAP Rigid Barrier Test
Model Year/Make/Model/Trimline/Body Style/NHTSA No. MXXXXX
Test Date (Month, Day, Year)

		Driver, 50th Percentile Male				Passenger, 5th Percentile Female			
Injury Reading	**Units**	**Limit**	**Value**	**t1**	**t2**	**Limit**	**Value**	**t1**	**t2**
HIC 15	None	700				700			
Nij	None	1				1			
Upper Neck Force Z (Tension)	Newtons	4170				2620			
Upper Neck Force Z (Compression)	Newtons	4000				2520			
Upper Neck Moment Y (Flexion)	Newtons	310				155			
Upper Neck Moment Y (Extension)	Newtons	135				67			
Chest Displacement	mm	63				52			
3ms Chest Clip	Gs	60				60			
Femur Force, Left	N	10000				6800			
Femur Force, Right	N	10000				6800			

	Test Particulars			
	Metric Units		English Units	
	Units	**Value**	**Units**	**Value**
Vehicle Impact Velocity	km/h		mph	
Vehicle Curb Weight	kg		lbs	
Vehicle Test Weight	kg		lbs	
As Delivered Vehicle Width	mm		Inches	
As Delivered Vehicle Wheelbase	mm		Inches	
As Delivered Vehicle Length	mm		Inches	

Standards Measured Post-Test	
212 - Windshield Periphery Retention	Pass/Fail
219 (partial) - Windshield Zone Intrusion	Pass/Fail
301- Fuel System Integrity	Pass/Fail

	Vehicle Safety Features	
	Driver	**Passenger**
Pretensioners	Yes/No	Yes/No
Load Limiters	Yes/No	Yes/No
Adjustable Belt Anchors	Yes/No	Yes/No
ABS	Yes/No	
ADLs	Yes/No	

	Airbag Deployment			
	Driver (P1)		Front Passenger (P2)	
	Deployment	**Mount**	**Deployment**	**Mount**
Front	Yes/No/NA	St. Wheel	Yes/No/NA	Dash
Knee	Yes/No/NA	Dash/N/A	Yes/No/NA	Dash/N/A
Side Torso	Yes/No/NA	Seat/Door	Yes/No/NA	Seat/Door
Side Curtain	Yes/No/NA	Header	Yes/No/NA	Header

Test Vehicle Doors	
Can Disable ADLs Using Owner's	Yes/No/NA
Doors Locked (Pre-Test)	Yes/No/NA
Doors Latched (Post-Test)	Yes/No/NA

Comments: _____

APPENDIX O

-RESERVED-

APPENDIX P

LOAD CELL BARRIER CONFIGURATIONS

APPENDIX P
LOAD CELL BARRIERS

1. PURPOSE

In conjunction with NHTSA's compatibility research activities, frontal NCAP tests may be used as a means of collecting data through load cells mounted to the rigid barrier wall. In these cases, an array of load cells will be provided to the contractor. The type and amount of load cells furnished will dictate their installation on the rigid barrier wall. The following serves to describe a few typical load cell wall arrangements.

2. 36-LOAD CELL BARRIER

One typical load cell wall contains 36 load cells, 250mm x 250mm in size, arranged in 4 rows of 9 load cells in each as seen in **Figure 1.** The load cells are single-axis and record force in the x-direction.

An 18 x 83-inch extension can be added to the top of the load cell barrier illustrated (as seen in **Figure 1**) to prevent vehicle hood override. The rigid steel frame shall be faced with ¾-inch thick plywood.

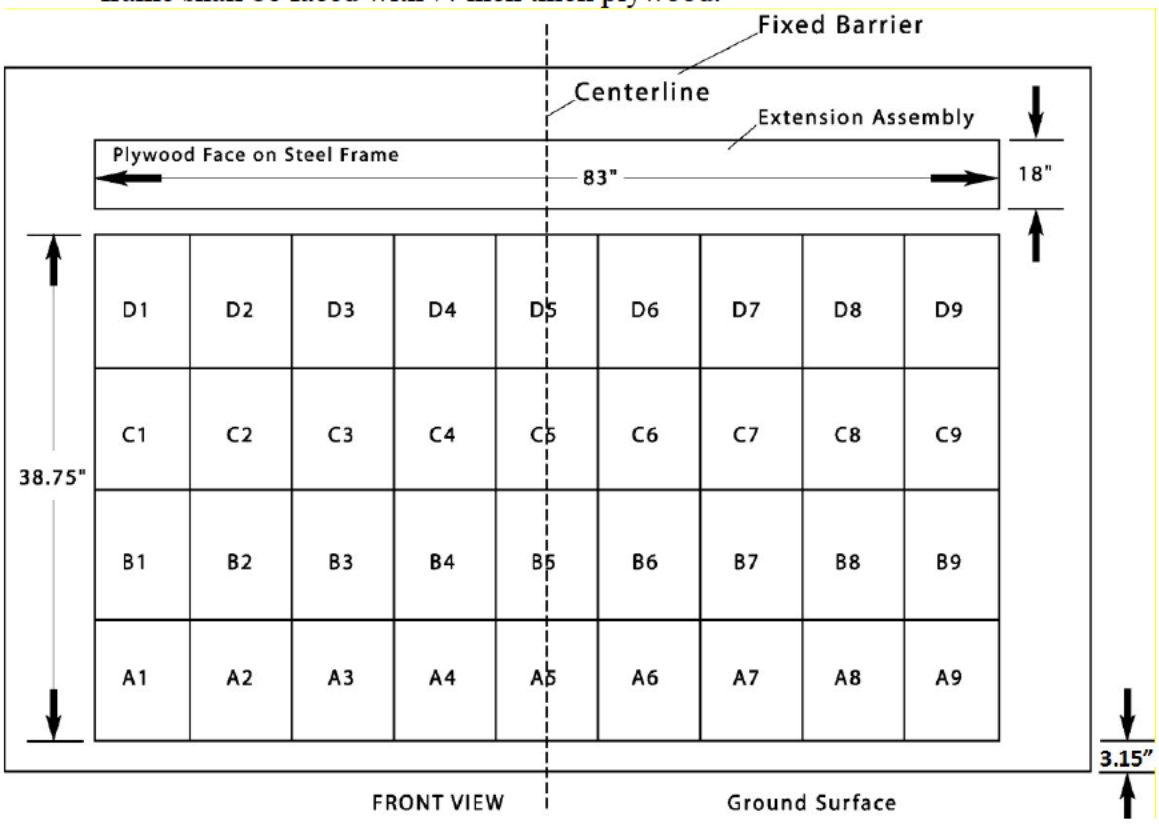

Figure 1 - Load Cell Locations on a 36-Load Cell Barrier with Plywood Height Extension

3. HIGH RESOLUTION 144-LOAD CELL BARRIER

Another load cell wall NHTSA may furnish contains 144 load cells, 125mm x 125mm in size, arranged in 9 rows of 16 load cells in each as seen in **Figure 2.** The load cells are multi-axis and record force in the x-direction.

An 18 x 83-inch extension can be added to the top of the load cell barrier illustrated (seen in **Figure 1**) to prevent vehicle hood override. The rigid steel frame shall be faced with ¾-inch thick plywood.

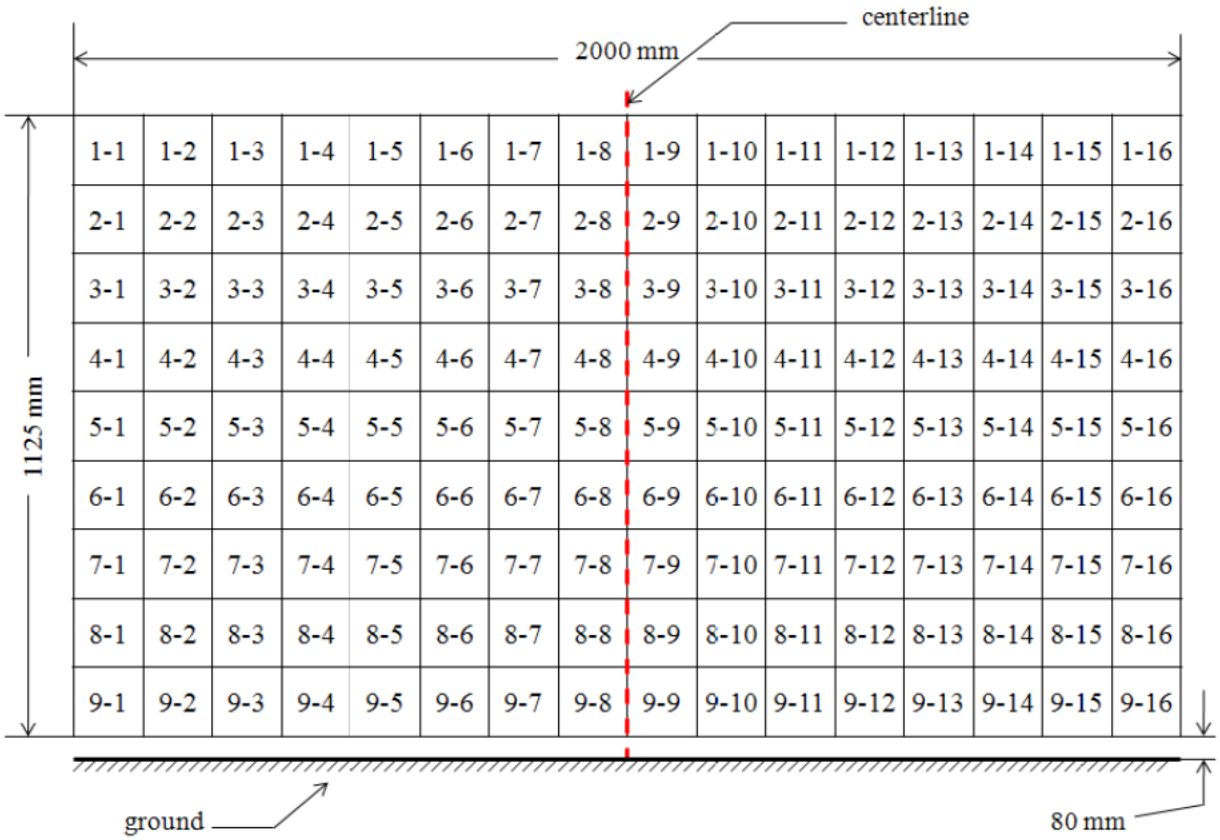

Figure 2: Load Cell Locations on a 144-Load Cell High Resolution Barrier

4. OTHER LOAD CELL BARRIERS

NHTSA may also furnish high resolution, multi-axis load cells for use in frontal NCAP testing. These load cells record force in the x-direction as well as moments about the y-axis and z-axis. Their installation configuration will be specified by the COTR when they are furnished.