PE03-058
HOGAN & HARTSON
FOR
MERCEDES-BENZ
3/12/2004
ATTACHMENT B & C
PART 5 OF 5
PART C IS THE LAST 8 PAGES

PE03-058
HOGAN & HARTSON
FOR
MERCEDES-BENZ
3/12/2004
ATTACHMENT B

Matter Overview

[redacted]

Long Mech Name
[redacted] v. Mercedes-Benz of North America

Matter Number: W310,1848
World Vin: 4JGAB54EBYA[redacted]

Matter Type: Warranty
Legal Area: Litigation Matters
Law Area:
TREAD:

Recd Date: 7/10/2003
Serve Date: 7/9/2003
Close Date:
Reopen Date:

Dispute: Yes Prior Matter: No Designed?: Yes

Description:

Plaintiff demands judgment in an unspecified amount under $50,000.00, together with all collateral charges, attorneys' fees, all court costs and treble damages for alleged breach of warranty and violations of the Magnuson-Moss Warranty Improvement Act and the Pennsylvania Unfair Trade Practices and Consumer Protection Law with respect to the purchase of her 2002 ML320. It is alleged that the vehicle exhibited defects and/or nonconformities including, malfunctioning electrical system, brakes, oil leak, power steering leak, air bag and vibration damper cracking, and that Defendant failed to repair the vehicle's defects and/or nonconformities.

Players

Name	Type	Role	Start Date	End Date
Zapf, Anthony B.	Assigned Staff	Primary Legal Contact	7/10/2003	
Armstrong, Esq., R. Mark	Billing People and Entities	Outside Counsel Attorney	7/10/2003	
Armstrong & Associates, P.C.	Assigned Staff	Primary Client Contact	7/10/2003	
Common Pleas Court,	Other	Court	7/10/2003	
Call Center 123 - Legal	Business Units	Call Center	7/10/2003	
Armstrong & Associates, P.C.	Billing People and Entities	Outside Counsel Firm	7/10/2003	
Bellido, Maryl	Other	Plaintiff	7/10/2003	
Zapf, Anthony B.	Assigned Staff	Assisting Attorney	7/10/2003	
Shimmel & Silverman, P.C.	Other	Plaintiff Firm	7/10/2003	
Mercedes-Benz of Devon	Other	Dealer	7/10/2003	
Silverman, Esq., Robert M.	Other	Plaintiff Attorney	7/10/2003	

Disputes

Court/Forum: Common Pleas Court, Philadelphia County, Pennsylvania 9/30/2003
Case/Docket No: 090431 SOL Begin:
Our Role: Defendant SOL Expire:

0310, 1046

CT System

Service of Process Transmittal Form
[illegible], Pennsylvania
[illegible]
Via Federal Express (2nd Day)

TO: Tracey L. Waters V.P. & Gen. Coll.
Mercedes-Benz USA, LLC
One Mercedes Drive
PO Box 350
Montvale, NJ 07645-0350

Phone: (201) 573-2288 ext

[illegible] 10 2003

RE: PROCESS SERVED IN PENNSYLVANIA

FOR: Mercedes-Benz of North America, Inc. Daimler Benz Co.
Trans Atlantic Mercedes-Benz Co.

[illegible] PROCESS WAS SERVED ON THE ABOVE COMPANY AS FOLLOWS:

1. TITLE OF ACTION: [redacted] vs Mercedes Benz of North America
2. DOCUMENTS SERVED: Other Brief, Notice, Complaint, Verification, Subpoena
3. COURT: Common Pleas Court, Philadelphia County, Pennsylvania
Case Number: [illegible]
4. NATURE OF ACTION: Personal injury/product liability vehicle. Amount Claimed: Not in excess of $50,000.
5. ON WHOM PROCESS WAS SERVED: CT Corporation System, Philadelphia, Pennsylvania
6. DATE AND HOUR OF SERVICE: By Process Server on [illegible] at 08:40
7. APPEARANCE OR ANSWER DUE: Within 20 Days
8. ATTORNEY(S): 215-[illegible]
Robert M. Sherman, Esquire
Harvey E. Sherman, P.C.
[illegible] Bala Cynwyd Plaza
Bala Cynwyd, PA 19004
9. REMARKS: Return Receipt rqtd.

Signed: CT Corporation System
Per: Ann Marie Armstrong
Address: 1515 Market Street
Suite 1210
Philadelphia, PA 19102
SOP WS [illegible]

Court of Common Pleas of Philadelphia County
Trial Division

Civil Cover Sheet

[redacted] 000431

[redacted]

[redacted]

1 | 1

10 - Contract - Other

TO THE PROTHONOTARY:
Kindly enter my appearance on behalf of Plaintiff/Petitioner/Appellant.
Papers may be served at the address set forth below.

Robert M. Silverman, Esquire
(215) 540-0808 | (215) 540-8817
59914
Ehrlich & Silverman, P.C.
30 East Butler Pike
Ambler, PA 19002

July 2, 2003

Robert M. Silverman, Esquire
Identification No. 38014
KIMMEL & SILVERMAN, P.C.
30 East Butler Pike
Ambler, PA 19002
(215) [illegible]

ATTORNEY FOR PLAINTIFF

THIS IS AN ARBITRATION MATTER. ASSESSMENT OF DAMAGES HEARING IS REQUESTED.

[redacted]

COURT OF COMMON PLEAS
PHILADELPHIA COUNTY
JULY 2003

ATTEST
JUL 08 2003
C. SCHWARTZ

v.

CIVIL ACTION

MERCEDES BENZ OF NORTH AMERICA
c/o CT Corporation
1818 Market Street
Philadelphia, PA 19103

000431

NOTICE TO DEFEND
CIVIL [illegible]

You have been sued in court. If you wish to defend against the claims set forth in the following pages, you must take action within twenty (20) days after the complaint and notice are served, by entering a written appearance personally or by attorney and filing in writing with the court your defenses or objections to the claims set forth against you. You are warned that if you fail to do so the case may proceed without you and a judgment may be entered against you by the court without further notice for any money claimed in the complaint or for any other claim or relief requested by the plaintiff. You may lose money or property or other rights important to you.

YOU SHOULD TAKE THIS PAPER TO YOUR LAWYER AT ONCE. IF YOU DO NOT HAVE A LAWYER OR CANNOT AFFORD ONE, GO TO OR TELEPHONE THE OFFICE SET FORTH BELOW TO FIND OUT WHERE YOU CAN GET LEGAL HELP.

PHILADELPHIA BAR ASSOCIATION
LAWYER REFERRAL & INFORMATION SERVICE
ONE READING CENTER
PHILADELPHIA, PA 19107
TELEPHONE: 215-238-1701

AVISO

Le han demandado a usted en la corte. Si usted quiere defenderse de estas demandas expuestas en las páginas siguientes, usted tiene veinte (20) días de plazo al partir de la fecha de la demanda y la notificación. Hace falta asentar una comparencia escrita o en persona o con un abogado y entregar a la corte en forma escrita sus defensas o sus objeciones a las demandas en contra de su persona. Sea avisado que si usted no se defiende, la corte tomará medidas y puede ordenar la demanda en contra suya sin previo aviso o notificación. Además, la corte puede decidir a favor del demandante y requiere que usted cumpla con todas las provisiones de esta demanda. Usted puede perder dinero o sus propiedades o otros derechos importantes para usted.

LLEVE ESTA DEMANDA A UN ABOGADO INMEDIATAMENTE. SI NO TIENE ABOGADO O SI NO TIENE EL DINERO SUFICIENTE DE PAGAR TAL SERVICIO, VAYA EN PERSONA O LLAME POR TELEFONO A LA OFICINA CUYA DIRECCION SE ENCUENTRA ESCRITA ABAJO PARA AVERIGUAR DONDE SE PUEDE CONSEGUIR ASISTENCIA LEGAL.

SERVICIO DE REFERENCIA LEGAL
ONE READING CENTER
FILADELFIA, PA 19107
TELEFONO: 215-238-1701

[redacted]

Robert M. Silverman, Esquire
Identification No. 55914
KIMMEL & SILVERMAN, P.C.
30 East Butler Pike
Ambler, PA 19002
(215) 540-8888

ATTORNEY FOR PLAINTIFF

THIS IS AN ARBITRATION MATTER. ASSESSMENT OF DAMAGES HEARING IS REQUESTED.

[redacted]
Huntingdon Valley, PA [redacted]

v.

MERCEDES BENZ OF NORTH AMERICA
c/o CT Corporation
1515 Market Street
Philadelphia, PA 19102

COURT OF COMMON PLEAS
PHILADELPHIA COUNTY

CIVIL ACTION

COMPLAINT
CODE: 1999

1. Plaintiff, [redacted] is an adult individual citizen and legal resident of the Commonwealth of Pennsylvania, [redacted] Huntingdon Valley, PA [redacted]

2. Defendant, Mercedes Benz of North America, Inc., is a business corporation qualified to do business and regularly conducts business in the Commonwealth of Pennsylvania, and is a corporation of the State of New Jersey, with its principle place of business located at Mercedes Drive, P.O. Box 350, Montvale, New Jersey, and can be served at CT Corporation, 1515 Market Street, Philadelphia, PA 19102.

BACKGROUND

3. On or about May 16, 2003, Plaintiff purchased a new 2003 Mercedes ML320, manufactured and warranted by Defendant, bearing the Vehicle Identification Number 4JGAB54E[redacted]

4. The vehicle was purchased in the Commonwealth of Pennsylvania and is registered in the Commonwealth of Pennsylvania.

5. The contract price of the vehicle, including registration charges, document fees, sales tax, finance and bank charges, but excluding other collateral charges not specified, yet defined by the Lemon Law, totaled more than $43,616.70. A true and correct copy of the contract is attached hereto, made a part hereof, and marked Exhibit "A".

6. In consideration for the purchase of said vehicle, Defendant issued to Plaintiff several warranties, guarantees, affirmations or undertakings with respect to the material or workmanship of the vehicle and/or remedial action in the event the vehicle fails to meet the promised specifications.

7. The above-referenced warranties, guarantees, affirmations or undertakings are/were part of the basis of the bargain between Defendant and Plaintiff.

8. The parties' bargain includes an express 3-year / 36,000 mile warranty, as well as other guarantees, affirmations and undertakings as stated in Defendant's warranty materials and owner's manual.

9. However, as a result of the ineffective repair attempts made by Defendant through its authorized dealer(s), the vehicle is rendered substantially impaired, unable to be utilized for its intended purpose, and is worthless to Plaintiff.

10. Plaintiff has or may have resorted to Defendant's informal dispute settlement procedure, to the extent said procedure complies with 16 CFR 703.

11. Plaintiff avers that the Federal Trade Commission (FTC) has determined that no automobile manufacturer complies with 16 CFR 703. See, Fed. Reg. 15636, Vol. 62, No. 63 (Apr. 3, 1997).

12. Within the warranty period, Plaintiff complained on at least three (3) occasions about defects and or non-conformities to the following vehicle components: malfunctioning electrical system; defective brakes; chronic oil leak; chronic power steering leak; malfunctioning air bag; and vibration damper cracking. True and correct copies of all invoices in Plaintiff's possession are attached hereto, made a part hereof, and marked Exhibit "B".

13. Plaintiff avers the vehicle has been subject to additional repair attempts for defects and conditions which Defendant's warranty dealer did not provide or maintain limited statements or records as required by law.

14. Plaintiff avers that such limited statements which were not provided also include technicians' waste of diagnostic procedures and repairs, and Defendant's Technical Service Bulletins relating to this vehicle.

15. Plaintiff has and will continue to suffer damages due to Defendant's failure to maintain and provide limited statements of repair.

COUNT I
MAGNUSON-MOSS (FTC) WARRANTY IMPROVEMENT ACT

16. Plaintiff hereby incorporates all facts and allegations set forth in this Complaint by reference as if fully set forth at length herein.

17. Plaintiff is a "Consumer" as defined by 15 U.S.C. §2301(3).

18. Defendant is a "supplier", "warrantor", and a "service contractor" as defined by 15 U.S.C. § 2301 (4)(5) and (8).

19. The subject vehicle is a "consumer product" as defined by 15 U.S.C. § 2301(1).

20. By the terms of its written warranties, affirmations, promises, or service contracts, Defendant agreed to perform effective repairs at no charge for parts and/or labor.

21. The Magnuson-Moss Warranty Improvement Act requires Defendant to be bound by all warranties implied by state law. Said warranties are imposed on all transactions in the state in which the vehicle was delivered.

22. Defendant has made attempts on several occasions to comply with the terms of its express warranties; however, such repair attempts have been ineffective.

23. The Magnuson-Moss Warranty Improvement Act, 15 U.S.C. §2310(d)(2) provides:

> If a warrantor finally prevails in an action brought under paragraph (1) of this subsection, he may be allowed by the court to recover as part of the judgment a sum equal to the aggregate amount of costs and expenses (including attorney fees based upon actual time expended), determined by the court to

have been reasonably incurred by the Plaintiff for, or in connection with the commencement and prosecution of such action, unless the court, in its discretion shall determine that such an award of attorney's fees would be inappropriate.

24. Plaintiff has afforded Defendant a reasonable number of opportunities to conform the vehicle to the aforementioned express warranties, implied warranties and contracts.

25. As a direct and proximate result of Defendant's failure to comply with the express written warranties, Plaintiff has suffered damages and, in accordance with 15 U.S.C. §2310(d)(1), Plaintiff is entitled to bring suit for such damages and other legal and equitable relief.

26. Defendant's failure is a breach of Defendant's contractual and statutory obligations constituting a violation of the Magnuson-Moss Warranty Improvement Act, including but not limited to: breach of express warranties; breach of implied warranty of merchantability; breach of implied warranty of fitness for a particular purpose; breach of contract; and constitutes an Unfair Trade Practice.

27. Plaintiff avers Defendant's Dispute Resolution Program is not in compliance with 16 CFR 703 by the FTC for the period of time this claim was submitted.

28. Plaintiff avers that upon successfully prevailing upon the Magnuson-Moss claim herein, all attorney fees are recoverable and are demanded against Defendant.

WHEREFORE, Plaintiff respectfully demands judgment against Defendant in an amount equal to the price of the subject vehicle, plus all collateral charges, incidental and consequential damages, reasonable attorneys' fees, and all court costs.

COUNT II
PENNSYLVANIA UNFAIR TRADE PRACTICES AND CONSUMER PROTECTION LAW

29. Plaintiff hereby incorporates all facts and allegations set forth in this Complaint by reference as if fully set forth at length herein.

30. Plaintiff is a "Person" as defined by 73 P.S. §201-2(2).

31. Defendant is a "Person" as defined by 73 P.S. §201-2(2).

32. Section 201-9.2(a) of the Act authorizes a private cause of action for any person "who purchases or leases goods or services primarily for personal, family or household purposes."

33. Section 1961 of the Pennsylvania Automobile Lemon Law, provides that a violation of its provisions shall automatically constitute a violation of the Pennsylvania Unfair Trade Practices and Consumer Protection Act, 73 P.S. 201-1 et seq.

34. In addition, the Pennsylvania Unfair Trade Practices and Consumer Protection Act, 73 P.S. §201-2(4), defines "unfair or deceptive acts or practices" to include the following conduct:

> (vii). Representing that goods or services are of a particular standard, quality or grade, or that goods are of a particular style or model, if they are of another;
>
> (xiv). Failing to comply with the terms of any written guarantee or warranty given to the buyer at, prior to, or after a contract for the purchase of goods or services is made;
>
> (xv). Knowingly misrepresenting that services, replacements or repairs are needed if they are not needed;
>
> (xvi). Making repairs, improvements or replacements on tangible, real or personal property of a nature or quality inferior to or below the standard of that agreed to in writing;
>
> (xxi). Engaging in any other fraudulent or deceptive conduct which creates a likelihood of confusion or of misunderstanding.

35. Plaintiff avers Defendant has violated these, as well as other provisions, of 73 P.S. §201-2 et seq.

36. Section 201-3.1 of the Act provides that the Automotive Industry Trade Practices rules and regulations adopted by the Attorney General for the enforcement of the Act shall constitute additional violations of the Act.

37. Defendants' conduct surrounding the sale and servicing of the subject vehicle falls within the aforementioned definitions of "unfair or deceptive acts or practices."

38. The Act also authorizes the Court, in its discretion, to award up to three (3) times the actual damages sustained for violations.

WHEREFORE, Plaintiff respectfully demands judgment against Defendant in an amount not in excess of Fifty Thousand Dollars ($50,000.00), together with all collateral charges, attorneys' fees, all court costs and treble damages.

KIMMEL & SILVERMAN, P.C.

By: _____
ROBERT M. SILVERMAN, ESQUIRE
Attorney for Plaintiff
30 East Butler Pike
Ambler, Pennsylvania 19002
(215) 540-8888

VERIFICATION

Robert M. Silverman, states that he is the attorney for the Plaintiff herein; that he is acquainted with the facts set forth in the foregoing Complaint; that same are true and correct to the best of his knowledge, information and belief; and that this statement is made subject to the Penalties of 18 Pa. C.S.A. §4904, relating to unsworn falsification to authorities.

ROBERT M. SILVERMAN, ESQUIRE
Attorney for Plaintiff

First Class Financing™ – *Pennsylvania*

[redacted]

VEHICLE DESCRIPTION

PRIMARY LIENHOLD

FINALIZATION OF AMOUNT FINANCED

NOTICE TO THE BUYER(S)

DO NOT SIGN THIS CONTRACT IN BLANK. YOU ARE ENTITLED TO AN EXACT COPY OF THE CONTRACT YOU SIGN. KEEP IT TO PROTECT YOUR LEGAL RIGHTS.

[redacted]

GUARANTY

INSURANCE

I UNDERSTAND THAT VEHICLE INSURANCE MAY BE OBTAINED FROM ANYONE OF MY CHOICE.

[illegible]

BID INSURANCE AFFORDED UNDER THIS CONTRACT DOES NOT COVER LIABILITY FOR BODILY TO PERSONS OR DAMAGE TO PROPERTY OF OTHERS.

CREDIT INSURANCE AND SERVICE OPTIONS

CREDIT LIFE AND CREDIT DISABILITY INSURANCE ARE OPTIONAL AND ARE NOT REQUIRED TO OBTAIN CREDIT AND WILL NOT BE PROVIDED UNLESS I SIGN AND AGREE TO PAY THE PREMIUM.

☐ Credit Life

Initial: X/X Initial: X/X

X Buyer X Buyer X/X

X Buyer X Buyer

SELLER

By signing below, the Seller accepts this Contract subject to the terms and conditions of the Automobile Retail Finance Agreement between Seller and SBCC, and assigns it to Santander Bank Credit Corporation.

X Signature

PRINTING NAME OF DEPOSIT

Sales Manager

INSURANCE VERIFICATION

Authorize Dealer to verify the insurance coverage specified in Section 9 is in force at the time of this Contract. If coverage is not in force, SBCC, NA, can add, charge, or finance [illegible]

[redacted]

NOTICE: SEE OTHER SIDE FOR IMPORTANT INFORMATION.
THE ADDITIONAL TERMS AND CONDITIONS ON THE REVERSE SIDE ARE A PART OF THIS CONTRACT.

[illegible] WHITE – ORIGINAL CUSTOMER – PINK DEALER – YELLOW

Mercedes-Benz of Dayton
[illegible] West Lexington Avenue
Dayton, [illegible]
[illegible]

LESSEE
ADDRESS
CITY, STATE, ZIP

PLEASE ENTER MY ORDER FOR THE FOLLOWING
☐ NEW ☐ USED ☐ DEMO ☐ CAR ☐ TRUCK

2000 MERCEDES-BENZ ML320 4MT
Color: Glacier Blue | Trim: Charcoal | Stock:
4TGAB54EBYA[redacted]
Stock No.: 20837 | Apps: [illegible]

1992 TOYOTA CAMRY
Color: GRAY | Mileage: 79455
4T1SK12E8N[redacted]
[redacted]
[illegible]

[redacted]
[redacted] 621-[illegible]
[redacted]
[illegible]

[redacted]

[redacted]

THE INFORMATION YOU SEE ON THE WINDOW FORM FOR THIS VEHICLE IS PART OF THIS CONTRACT. INFORMATION ON THE WINDOW FORM OVERRIDES ANY CONTRARY PROVISIONS IN THE CONTRACT OF SALE.

If you cancel this purchase agreement or refuse to take delivery of the vehicle ordered, except as permitted by law, you shall, at our option, be liable as damages the amount of $
PURCHASER'S SIGNATURE X

Purchaser agrees that this order includes all of the terms and conditions on both the front and reverse side hereof, that this order supersedes any representations or prior agreements and that no other agreements, representations or statements of the terms of agreement relating to the subject matter shall be binding. This order shall not become binding until accepted by the dealer or an authorized representative. You, the buyer, may assign this contract and sell your vehicle any time by delivery to a copy of this contract signed by an authorized dealer representative in exchange for a signature of acceptance by the dealer.
Purchaser by his signature on this order acknowledges that he has read the terms and conditions and has received a copy of the same.
PURCHASER'S SIGNATURE X [redacted] DATE 3/12/[illegible] ACCEPTED BY [illegible] DATE [illegible]

[redacted]
[redacted] 6/12/[illegible]
[redacted]
[redacted]
[redacted]

Price of Vehicle	35300.00
Mercedes Guard	425.00
Gap Coverage	295.00
Vehicle Shipping	600.00
All Lucky Package	1500.00
Rear Seat w/CD Changer	1000.00
Floor	645.00
Total Price of Vehicle & Accessories	40,000.00
(0.0625 × 35,750) × 5.00	2235.00
Vehicle Tax	—
Title Registration	11.25
Title Application	8.75
Tax	[illegible]
Registration	34.00
License	5.00
Trailer	
Tire Fee	5.00
Plates	40.00
Total Price	42,303.00
Trade-In	
Less Payoff	8552.00
Net Trade-In	33,751.00
Deposit	1000.00
Cash on Delivery	17553.00
Total Down Payment	
Deposit Balance of Total Price	

Mercedes-Benz of Dover
214 West Loockerman Avenue
Dover, PA 19933
610-697-1800

LESSEE
STREET
CITY, STATE, ZIP

PLEASE ENTER MY ORDER FOR THE FOLLOWING
☒ NEW ☐ USED ☐ DEMO ☐ CPO ☐ TRADE

2004 MERCEDES-BENZ ML 350 4MV
4JGAB54E8YA [redacted]
20837 MERCEDES-BENZ
1997 TOYOTA CAMRY
BEIGE GRAY 78435
4T1SK12E8NU [redacted]
[redacted]
MERCEDES-BENZ
[redacted]
[redacted]
MARYLAND CASUALTY CO.

5/13/04
[redacted]
HUNTINGTON VALLEY PA
[redacted]

Cash Price of Vehicle	36300 00
METALLIC PAINT	475 00
PARK SENSOR TAP	2365 00
HEATED FRONT SEATS	600 00
ML LIBERTY PACKAGE	1500 00
BLUE ACCT W/ CD CHANGER	1050 00
FREIGHT	695 00
Cash Price of Vehicle & Accessories	42,900 00
(42900 - 3,750) x 6.5% Sales Tax	2275 00
Sales Tax	—
Title Application	11 75
Delivery Mileage	0 75
Tag	25 00
Registration	36 00
Lettering	5 00
Tags	
PA Title Tax	5 00
Doc Fee	40 00
Total Price	42,363 50
Trade	
Less Payoff *	
Net Trade In	3150 00
Deposit	1000 00
Cash on Delivery	37583 50
Total Down Payment	2333 50
Unpaid Balance of Total Price	40,029 50

☒ MONEY MARKET - The money market [illegible]
☐ WEEK TEST GUARANTY - [illegible]
☐ AS IS - [illegible]

PURCHASER'S SIGNATURE X [redacted]

USED CAR CONTRACTUAL DISCLOSURE STATEMENT
THE INFORMATION YOU SEE ON THE WINDOW FORM FOR THIS VEHICLE IS PART OF THIS CONTRACT. INFORMATION ON THE WINDOW FORM OVERRIDES ANY CONTRARY PROVISIONS IN THE CONTRACT OF SALE.

If you cancel this Purchase Agreement, or refuse to take delivery of the vehicle ordered, unless permitted by law, you shall, at our option, include as damages the amount of $

PURCHASER'S SIGNATURE X

Purchaser agrees that this order includes all of the terms and conditions on both the face and reverse side hereof, and that no other agreements and representations of any prior agreement and as of the date hereof constitutes the complete and exclusive statement of the terms of agreement relating to the subject matters covered hereby. This order shall not become binding upon acceptance by the dealer or his authorized representative. You, the buyer may cancel this contract and receive a full refund of any trade within [illegible] days of this contract signed by an authorized dealer representative or other written notice or communication to the dealer. Purchaser by his signature [illegible] has read the terms and conditions and has received a copy of this order.

PURCHASER'S SIGNATURE X [redacted] DATE 5/15 [illegible] ACCEPTED BY [illegible] DATE 5/15/04

Mercedes-Benz of Devon

214 West Lancaster Ave.
Devon, Pa 19333
(610) 687-1500
fax (610) 254-0854
Web site:
www.MBOFDEVON.com

[redacted]

SERVICE ADVISOR:

27.00

0.00

0.00

0.00

0.00

Mercedes-Benz

Mercedes-Benz
HOUSE OF QUALITY

[redacted]

Mercedes-Benz of Devon
214 West Lancaster Ave.
Devon, PA 19333
(610) [illegible]
fax (610) 964-0854
Web site:
www.MBOFDEVON.com

[illegible] 168988

INVOICE

[redacted]

[illegible] VALLEY, PA [redacted]
[redacted] [redacted]

PAGE 1

SERVICE ADVISOR: [illegible]

[illegible] 00 MERCEDES [illegible] [illegible] [redacted] [illegible] [illegible]

[illegible] 13,100 [illegible] 77.00 CASH [illegible]2002

[illegible] [illegible] 3.2 Liter

[illegible]2002 [illegible]2002

LINE OPCODE TECH TYPE HOURS	LIST	NET	TOTAL
4700 REPLACE FRONT BRAKE PADS			
1 162-420-03-20 BRAKE DISC	124.02	124.02	124.02

PARTS: 116.27 LABOR: 77.00 OTHER: 0.00 TOTAL LINE A: 213.27

****

MERCEDES BENZ OF DEVON

Mercedes-Benz

LABOR AMOUNT	77.00
PARTS AMOUNT	[illegible]
GAS, OIL, LUBE	0.00
SUBLET AMOUNT	0.00
MISC. CHARGES	0.00
TOTAL CHARGES	213.27
LESS INSURANCE	0.00
SALES TAX	[illegible]
PLEASE PAY THIS AMOUNT	[redacted]

CUSTOMER COPY

2159386233

[redacted]

[redacted]
ZONE: [redacted] BOS: [redacted]

744 | 00 | MERCEDES NC320

16MAY2000 | 17:00 2A5E201

2A5E201 | 2B5E201

LINE OPCODE DESC TYPE HOURS

CAUSE: ELECTRICAL FAULT

DETERM. CODE

911870 ELECTRIC TEST PROGRAM - AIR BAG/ECU/SRS

211 RATE 1.10 (N/C)

912004 DRIVER SIDE SIDE AIR BAG - DOOR REMOVAL

211 RATE 0.30 (N/C)

4 003-990-24-97 RIVET (N/C)

THANK YOU FOR SELECTING

Mercedes-Benz

LABOR SUBTOTAL	0.00
PARTS SUBTOTAL	0.00
SUBLET SUBTOTAL	0.00
MISC. CHARGES	0.00
PARTS CHARGES	0.00
LABOR CHARGES	0.00
SALES TAX	0.00
PLEASE PAY THIS AMOUNT	[redacted]

CUSTOMER COPY

[redacted]

2-4

Mercedes-Benz of Devon

214 West Lancaster Ave.
Devon, Pa 19333
(610) 687-1600
fax (610) 254-0964
Web site:
www.MBOFDEVON.com

[redacted]

INVOICE

PAGE 0

SERVICE ADVISOR: 261 CHUCK EVRACHEE

244	00	MERCEDES ML320	4JGAB54B9YA		18367/18369	

16MR2000 17:00 18APR02 85.00 CASH 18APR2002

OPTIONS: STK:20637 DLR:67254 ENG:3.2 L:Gas

18APR02 18APR02

LINE OPCODE TECH TYPE HOURS					
				NET	TOTAL
2 163-820-06-45 WIPER BLADE					(W/C)
423438 BRAKE FLUID - VEHICLE WITH ESP, REPLACE					
1 000-989-08-07-18 BRAKE FLUID					(W/C)
PO995					

PARTS: 0.00 LABOR: 0.00 OTHER: 0.00 TOTAL LINE $: 0.00

MERCEDES-BENZ OF DEVON

Mercedes-Benz

Mercedes-Benz
HOURS OF OPERATION
7:00 AM - 5:30 PM
Mon. - Fri.
9:00 AM - 4:00 PM
Saturday

LABOR AMOUNT	74.00
PARTS AMOUNT	0.00
GAS, OIL, ETC	0.00
SUBLET AMOUNT	0.00
MISC. CHARGES	0.00
TOTAL CHARGES	74.00
LESS WARRANTY	0.00
SALES TAX	4.44
PLEASE PAY THIS AMOUNT	[redacted]

CUSTOMER COPY

Mercedes-Benz of Devon

214 West Lancaster Ave.
Devon, Pa 19333
(610) 687-1820
fax (610) 254-0894
Web site
www.MBOFDEVON.com

[redacted]

PAGE 1

SERVICE ADVISOR: 761 CARL ESPOSITO

741 00 MERCEDES [illegible]

[illegible]

0001 STATE INSPECTION

PARTS: 0.00 LABOR: 25.00 OTHER: 0.00 TOTAL LINE 1: 25.00

0002 EMISSION INSPECTION

PARTS: 0.00 LABOR: 49.00 OTHER: 0.00 TOTAL LINE 2: 49.00

CAUSE: LOOSE

241 RPL 0.30 (M/C)

D TOUCH-UP CHIPS

241 CP 0.00 0.00 0.00

2 FLEXIBLE SERVICE SYSTEM (FSS) - SERVICE CODE "B"

001100 FLEXIBLE SERVICE SYSTEM (FSS) - SERVICE

241WRLP 2.50 (M/C)

1 002403-014106 RING,GENERAL (M/C)

[illegible]

CUSTOMER COPY

PRINCETON MOTORSPORT INC.

[redacted]

[redacted]

[redacted]

[redacted]

[redacted]

[redacted]

2-4-2

2159280201

Mercedes-Benz of Devon

214 West Lancaster Ave.
Devon, Pa 19333
(610) 687-1500
fax (610) 254-0864
Web site:
www.MBOFDEVON.com

[redacted]

[redacted]

PAGE 2

SERVICE ADVISOR: 281 CARL BIRACHER

[redacted]

PARTS: 0.00 LABOR: 0.00 OTHER: 0.00 TOTAL LINE C: 0.00

****

CAUSE: CRACKING

REPL.

1 112-035-08-00 VIBRATION DA

W/C

THANK YOU FOR CHOOSING
FOR YOUR SERVICE NEEDS

Mercedes-Benz

[redacted]

CUSTOMER COPY

[redacted]

Mercedes-Benz of Devon
214 West Lancaster Ave.
Devon, Pa 19333
(610) 687-1600
fax (610) 254-0684
Web site:
www.MBOFDEVON.com

[redacted]

INVOICE

PAGE 1

SERVICE ADVISOR: [redacted]

[redacted]

OPTIONS: STK:20837 DEL:67244 ENG:3.2 LITRE

[redacted]

CAUSE: LEAKING

26 HRS. 1.50 (W/C)

4 X / REPL. PARTS

1 140-271-00-60 SEAL RING (W/C)

1 140-271-00-80 GASKET, TRANS (W/C)

1 026-997-40-48 SEAL RING (W/C)

PARTS: 0.00 LABOR: 0.00 OTHER: 0.00 TOTAL LINE A: 0.00

CAUSE: LEAKING

36 HRS. 2.70 (W/C)

PARTS: 0.00 LABOR: 0.00 OTHER: 0.00 TOTAL LINE B: 0.00

CAUSE: LEAKING

TANK/COOLING TUBE, REPL.

1 163-460-27-24 HOSE (W/C)

[redacted]

LABOR AMOUNT
PARTS AMOUNT
SUBLET AMOUNT
TOTAL CHARGES
PAID ON ACCOUNT
SALES TAX
PLEASE PAY THIS AMOUNT

CUSTOMER COPY

1-62

Mercedes-Benz of Devon

214 West Lancaster Ave.
Devon, Pa. 19333
(610) 687-1500
fax (610) 254-0854
Web site:
www.MBOFDEVON.com

INVOICE

Page 1

SERVICE ADVISOR: 78 CHRISTINA SCHUMER

744 | 00 | MERCEDES ML320 | 4JGAB54BXY[redacted] | 28633/28543 | 24700

16MAY2000 | 19:00 24FEB01 | 80.0K | CRAB | 24FEB2003

21FEB03 | 24FEB03

CAUSE: INSPECTION OFFICE

SYST:-TEST,VERIFOR

02-3431 INSTALL SUPPLEMENTAL LINES FOR LEAKS

WITH FUEL PUMP REPLACEMENT

075730 FUEL PUMP, REPLACE

075863 MAIN FUEL FILTER - (CAL. [illegible]) REPL.

1 163-470-26-94 FUEL PUMP (N/C)

1 163-470-26-64 LINE (N/C)

1 163-477-07-01 FUEL FILTER (N/C)

1 000-989-73-30-10 SEALING CONP (N/C)

TOTAL: Mercedes-Benz

PARTS: 0.00 LABOR: 0.00 OTHER: 0.00 TOTAL LINE A: 0.00

CAUSE: TOW TO SHOP

216 MSR. 1.80 (N/C)

1.80 (N/C)

Mercedes-Benz

Mail to Customer

2-41

Mercedes-Benz of Devon

214 West Lancaster Ave.
Devon, Pa 19333
(610) 687-1800
fax (610) 254-0654
Web site:
www.MBOFDEVON.com

[redacted]

SERVICE ADVISOR: [redacted]

744 | 00 | MERCEDES ML320 | [redacted] | 25539/25543 | 11700

16007006 | 27:00 [redacted] | 03.00 | CASH | [redacted]

[redacted]

THANK YOU FOR SELECTING
FOR YOUR SERVICE NEEDS

Mercedes-Benz

[redacted]

[redacted]	0.00
[redacted]	0.00
[redacted]	0.00
[redacted]	0.00
[redacted]	0.00
[redacted]	0.00
[redacted]	0.00
[redacted]	0.00
PLEASE PAY THIS AMOUNT	[redacted]

2159086233 130184

Mercedes-Benz of Devon

214 West Lancaster Ave.
Devon, Pa 19333
(610) 687-1800
fax (610) 284-0854
Web site:
www.MERCEDESDEVON.com

MARYA BELKIN
2235 PINE ROAD
HUNTINGDON VALLEY, PA 19006
HOME: 215-938-6233 BUS: 215-781-8380

INVOICE

DUPLICATE 1
PAGE 1

SERVICE ADVISOR: [redacted]

744 [redacted]

LAST 12000 [redacted]

24JAN03 28JAN03

[redacted]

CAUSE: LEAKING

LEAKS/DEFER. COND.

200000 REPAIR LOWER RADIATOR HOSE

PARTS: 0.00 LABOR: 0.00 OTHER: 0.00 TOTAL LINE A: 0.00

CAUSE: LEAKING

26 GAL 2.50 (C)

1 006-997-05-90 LOCK TIE (C)

PARTS: 0.00 LABOR: 0.00 OTHER: 0.00 TOTAL LINE B: 0.00

MERCEDES-BENZ OF DEVON

[redacted]

CUSTOMER COPY

0183D86213

Mercedes-Benz of Devon
214 West Lancaster Ave.
Devon, PA 19333
(610) 687-1850
fax (610) 254-0884
Web site:
www.MBOFDEVON.com

INVOICE

DUPLICATE 1
PAGE 1

[illegible]
2285 PINE ROAD
HUNTINGDON VALLEY, PA 19006
HOME: 215-938-6223 BUS: 215-781-8350

SERVICE ADVISOR: 243 CHRIS STRACHAN

744	00	MERCEDES ML320	4JG[redacted]		27064/27088	11677
16MAY2000			17:00 07MAY03		80.00	CASH
07MAY03	07MAY03	OPTIONS: STK:28837 DLR:67284 ENG:3.2 Liters				

LINE OPCODE TECH TYPE HOURS LIST NET TOTAL

PARTS: 0.00 LABOR: 0.00 OTHER: 0.00 TOTAL LINE F: 0.00

****

MERCEDES BENZ OF DEVON

Mercedes-Benz

[illegible]

Mercedes-Benz
HOURS OF OPERATION
[illegible]

LABOR AMOUNT	0.00
PARTS AMOUNT	0.00
GAS, OIL, LUBE	0.00
SUBLET AMOUNT	0.00
MISC. CHARGES	0.00
TOTAL CHARGES	0.00
LESS INSURANCE	0.00
SALES TAX	0.00
PLEASE PAY THIS AMOUNT	[redacted]

CUSTOMER COPY

[redacted]

2-4

215[illegible]

[illegible]

Mercedes-Benz of Devon
216 West Lancaster Ave.
Devon, Pa 19333
(610) 687-1500
fax (610) 254-0554
Web site:
www.MBOFDEVON.com

"INVOICE"

DUPLICATE 1
PAGE 2

[illegible]
HONEYBROOK VALLEY, PA 19064
HOME: 215-938-6233 WOR: 215-781-5350

SERVICE ADVISOR: [illegible]

[redacted]

764	00	[illegible]	[illegible]	[redacted]		27054/27022	71637
16[illegible]							
[illegible]			17:00 [illegible]		88.00	CASH	[illegible]

STK:20837 [illegible]

[redacted]

PARTS: 0.00 LABOR: 0.00 OTHER: 0.00 TOTAL LINE C: 0.00

[redacted]

CAUSE: ROUTINE

[redacted]

NEW

[redacted]

1 112-078-00-43 VALVE (W/C)

[redacted]

[redacted]

[illegible] ADD FOR FUEL ROUGH, STALLING

[redacted]

381824 TEST AND REPLACE 2 SPARK PLUG WIRES AND

126 MOBL 0.80

[redacted] (W/C)

2 112-160-01-18 [illegible] (W/C)

[redacted]

[redacted]

[redacted]

[redacted] (W/C)

[redacted]

[redacted]

CUSTOMER COPY

1-of-2

2159386233

Mercedes-Benz of Devon

214 West Lancaster Ave.
Devon, Pa. 19333
(610) 687-1500
fax (610) 254-0064
Web-site:
www.MBOFDEVON.com

MARYA REUTER
2215 FIRE ROAD
HUNTINGDON VALLEY, PA 19006
HOME: 215-938-6253 BUS: 215-781-5186

INVOICE

DOCUMENT 2
PAGE 1

SERVICE ADVISOR: [redacted]

[redacted]

CAUSE: INSUFFICIENT EFFECT

126 WORK 0.30 (W/C)

FOR TEST, PERFORM

071172 INDIVIDUAL COMPONENTS WITH ENGINE

126 WORK 1.00 (W/C)

126 WORK 0.30 (W/C)

PARTS: 0.00 LABOR: 0.00 OTHER: 0.00 TOTAL LINE A: 0.00

TOW TOW TO SHOP

SUBL TOWING FOR DEES

PARTS: 0.00 LABOR: [illegible] TOTAL LINE B: 0.00

CAUSE: LEAKING

THROTTLE ACTUATOR

1 [illegible]-141-18-80 GASKET (W/C)

2 007603-014104 RING,SEALING (W/C)

[illegible]

CUSTOMER COPY

Mercedes-Benz of Devon

314 West Lancaster Ave.
Devon, Pa 19333
(610) 687-1800
fax (610) 254-0884
Web site:
www.MBOFDEVON.com

[redacted]

PAGE 1

SERVICE ADVISOR: 272 DAVID [redacted]

744 00 MERCEDES ML320

27643/27651 01571

15MAY2000

17:00 25MAY00 [redacted] 08:00 CASH 25MAY2000

25MAY00 25MAY00

LINE OPCODE TECH TYPE HOURS

LABOR TAX NET TOTAL

CAUSE: ELECTRICAL FAULT

124 MBZL 0.10

(N/C)

FOR TEST, PERFORM

071172 INDIVIDUAL COMPONENTS WITH FAULT

126 MBZL 1.00

(N/C)

CATALYST, REPL.

1 000-540-81-17 O2 SENSOR

(N/C)

R44 ADD CHECK ENGINE LIGHT ON

071600 MASS AIR FLOW SENSOR, SINGLE 1 FUEL SYS.

126 MBZL 0.30

(N/C)

PARTS: 0.00 LABOR: 0.00 OTHER: 0.00 TOTAL LINE $: 0.00

MERCEDES BENZ OF DEVON

Mercedes-Benz

[illegible]	0.00
[illegible]	0.00
[illegible]	0.00
[illegible]	0.00
[illegible]	0.00
[illegible]	0.00
[illegible]	0.00
[illegible]	0.00
[illegible]	0.00
PLEASE PAY THIS AMOUNT	[redacted]

CUSTOMER COPY

[redacted]

[redacted]

DESCRIPTION	TOTAL
LABOR AMOUNT	0.00
PARTS AMOUNT	0.00
SUBL OIL USE	0.00
SUBLET AMOUNT	0.00
MISC CHARGES	0.00
TOTAL CHARGES	0.00
LESS INSURANCE	0.00
SALES TAX	0.00
PLEASE PAY THIS AMOUNT	0.00

Mercedes-Benz

CUSTOMER COPY

[redacted]

Mercedes-Benz of Devon
214 West Lancaster Ave.
Devon, Pa 19333
(610) 687-1500
fax (610) 254-0454
Web site:
www.MBOfDEVON.com

[redacted]

[redacted] PA [redacted]
HOME: [redacted] BUS: [redacted]

PAGE 1

SERVICE ADVISOR: [redacted]

[redacted]

0002 STATE INSPECTION

PARTS: 0.00 LABOR: 20.00 OTHER: 0.00 TOTAL LINE A: 25.00

0002 EMISSION INSPECTION

PARTS: 0.00 LABOR: 40.00 OTHER: 0.00 TOTAL LINE B: 40.00

CAUSE: A SERVICE

SCOPE "A"

1 112-180-00-09 FILTER ELEM (N/C)

LUBE 7.5QTS OF OIL

WAS: (N/C)

CUSTOMER PAY ENVIRO. MIN. CHG FOR REPAIR ORDER 3.56

MERCEDES BENZ OF DEVON

Mercedes-Benz

CUSTOMER COPY

[redacted]

Mercedes-Benz of Devon

214 West Lancaster Ave.
Devon, Pa 19333
(610) 687-1500
fax (610) 254-0654
Web site:
www.MBOFDEVON.com

[redacted]

SERVICE ADVISOR: [redacted]

0001 STATE INSPECTION

PARTS: 0.00 LABOR: 25.00 OTHER: 0.00 TOTAL LINE 1: 25.00

0002 EMISSION INSPECTION

PARTS: 0.00 LABOR: 25.00 OTHER: 0.00 TOTAL LINE 2: 50.00

ORDER: A SERVICE

SCOPE -A-

1 000-180-32-03 FILTER ASSY (N/C)

TOTAL 7.5QTS OF OIL

(N/C)

THANK YOU FOR SELECTING

FOR YOUR SERVICE NEEDS

LABOR TOTAL	[redacted]
PARTS AMOUNT	0.00
OTH. SL. TAX	0.00
SHOP SUPPLIES	0.00
MISC. SUPPLIES	0.00
TOTAL CHARGES	[redacted]
LESS DEPOSITS	0.00
SALES TAX	[redacted]
PLEASE PAY THIS AMOUNT	[redacted]

Mercedes-Benz
HOURS OF OPERATION
7:00 AM - 6:00 PM
Mon-Fri 7:00 AM - 4:00 PM
Sat

CUSTOMER COPY

2001-11-1917/PK

Office of the Attorney General

Request for Arbitration by the Florida New Motor Vehicle Arbitration Board

For Office Use Only	Indicate Date:
Filed (DCS)	11/9/01
Ineligible	
Returned	
Rejected	
Withdrawn	
Referred to AG	11/27/01
Approved	11/28/01
AG Case #	8001-1093/MLA

1. Purchaser/Lessee Name(s): [redacted]
2. Address: [redacted]

   City: Miami State: FL. Zip Code: [redacted]
3. Home Phone: [redacted] Work Phone: [redacted]

4. Dealer Name: Bill Ussery Motors

   Address: 300 Almeria Ave

   City: Coral Gables State: FL. Zip Code: 33134

   Lessor, bank, or lending institution to which monthly payments are made:

   Mercedes-Benz-Credit Loan or Acct. #: [redacted]

   Address: P.O Box 530058

   City: Atlanta State: GA. Zip Code: 30353-0058

RECEIVED

NOV 19 2001

Division of Consumer Services

5. If successful, I prefer to receive: ☑ A refund

   ☐ A replacement vehicle

6. Vehicle Type Car ☒ Truck ☐ Van ☐ Sport Utility ☐

7. If a truck: 10,000 lbs. or less gross vehicle weight Yes ☐ No ☐

8. Manufacturer: Mercedes
(GM, Ford, Chrysler, Toyota, etc.)

9. Make: Mercedes Model: E-320 Year: 2000
(Dodge, Mercury, etc.) (Mustang, Accord, etc.)

10. Vehicle Identification Number (VIN): WDBJF61SF121[redacted]
(This is a 17-character identifier usually consisting of letters and numerals that is listed on your vehicle registration.)

11. If a conversion vehicle, give the name of the company who performed the conversion, if known:

_____
(Explorer Vans, Mark III, Sherrod, etc. Attach a copy of the warranty.)

a. Was the conversion work performed prior to your purchase? Yes ☐ No ☐
b. If after your purchase, was the conversion work performed through the dealership as an option, referral or part of the sale? Yes ☐ No ☐

12. Date you took delivery of the vehicle MAY-12-2000

Mileage on the odometer on the date of delivery 9 Miles

13. Was the vehicle: Purchased ☐ Leased ☒

In Florida? Yes ☒ No ☐

As (check one): New ☒ Demonstrator ☐ Used ☐

14. If leased, for a term of one year or more? Yes ☒ No ☐

15. Do you still own or possess the vehicle? Yes ☒ No ☐

16. If purchased used, was the vehicle transferred to you by the original owner within 24 months after the date of original delivery? Yes ☐ No ☐ N/A

a. If yes, complete the following

Original owner's name: _____

State where vehicle was originally purchased: _____

Actual date of delivery to original owner: _____

NOTICE: You must provide proof at the hearing of answers given in this section.

17. List each problem (other than routine maintenance and minor warranty repairs), that was first reported to the authorized service agent (dealer) within 24 months after the date of delivery, and that you claim substantially impairs the use, value or safety of the vehicle. Give the dates of three repair attempts that took place before the date written notification was sent to the manufacturer. If a substantial problem had less than three repairs before notification, list it and the repair date(s). Attach a separate sheet if necessary.
Do not list the same problem twice. Please attach copies of all relevant repair orders.

Problem	Date 1	Date 2	Date 3
1. Radio / Tele Ant.	06-05-00	06-07-00	08-07-00
2. Drivers Front Seat	12-18-00	12-26-00	04-01-01
3. Dash Bumper Cracked	12-16-00		
4. Air Bag Panel	12-26-00		
5. Ash Tray - Defect	12-26-00		
6. Crank Shaft Pulley	02-01-01		

18. Did you notify the manufacturer (not the dealer) identified in Question 8 in writing after three or more repair attempts for the same problem(s)? Yes ☑ No ☐

If yes, date the manufacturer received notification: 12-04-00 10-11-2001

a. (Answer only if applicable.) Did you notify the conversion company identified in Question 11 in writing after three or more repair attempts? Yes ☐ No ☐

If yes, date the conversion company received the notification: _____

Attach a copy of the motor vehicle defect notification form or other written notification and postal receipt indicating when the manufacturer and/or conversion company received the notification.

19. Following receipt of the notification, did the manufacturer and/or conversion company make a final attempt to correct the problem(s)? Yes ☒ No ☐

If yes, on what date(s)? → 12-18-01 - C.D INSTALLED / GOOD WORK | 11-16-01

If no, explain why: _____

(Attach copies of all relevant work orders.)

20. Does the problem(s) still exist? SOME — Yes ☒ No ☐

If no, explain why: SOME HAVE BEEN REPAIRED FOR NOW

[redacted] PROBLEM [redacted]	DATE 1	[redacted] DATE 2. [redacted]	DATE 3
7 A/C BLOWER	03-20-01		
8 FUEL GAGE	05-09-01		
9 TRANSMISSION	05-09-01	08-03-01	10-09-01
10 SUNVISOR	05-09-01	10-09-01	
11 ELECTRICAL - Lights + Locks	05-19-01	06-25-01	07-16-01
12 TRANS- SHIFTER	06-25-01	08-03-01	11-06-01
13 OXYGEN SENSOR	08-03-01	08-07-01	

— CONT ON DATES.

	DATE 4	DATE 5	DATE 6	DATE 7
5) RADIO	12-10-01	06-25-01		
6) DRIVERS SEAT	03-09-01	03-09-01	05-09-01	06-25-01
7) ELECTRICAL Lights-Lock.	07-23-01	REAR WINDOW 10-09-01		
9) TRANSMISSION	11-06-01	11-09-01		
12) TRANS. SHIFTER	11-09-01			

21. Was the vehicle out of service for repair of one or more of the problems described in Question 17 for a cumulative total of 30 or more calendar days? Yes ☒ No ☐

If yes, how many days? 45 DAYS + 4 DAYS? = 49

Did you notify the manufacturer (not the dealer) identified in Question 8 and, if applicable, the conversion company identified in Question 10 in writing after 15 or more days out of service? Yes ☒ No ☐

If yes, date(s) the manufacturer and/or conversion company received notification:

Manufacturer: 12-04-00 \ 10/1/01 Conversion Company: _____

If no, explain why: _____

22. Following receipt of the notification, did the manufacturer, conversion company or authorized service agent (the dealer) have the opportunity to inspect or repair the vehicle? Yes ☒ No ☐

If no, explain why: _____

23. Is the problem(s) about which you are complaining the result of an accident, abuse, neglect, modification or alteration by someone other than the manufacturer, conversion company or an authorized service agent (the dealer): Yes ☐ No ☒

24. Did you participate in a state-certified manufacturer's informal dispute settlement program? Yes ☐ No ☐

If yes, what was the name of the program? _____
(BBB/AUTOLINE, etc.)

Date the program received your claim _____

Date of your hearing (if applicable) _____ Mileage _____

Did that program render a decision? Yes ☐ No ☐

If no, explain why: _____

If yes, were you satisfied with the decision of the program? Yes ☐ No ☐

Date of final decision or action? _____

You must attach copies of: your claim, postal receipt or letter from the program acknowledging receipt, and the decision of the program, if applicable.

25. Is this your first request for arbitration by the Florida New Motor Vehicle Arbitration Board for this vehicle? Yes ☒ No ☐

If no, was previous application: Withdrawn by you ☐ Rejected by screening agency ☐

If neither withdrawn nor rejected, what happened?

_____

_____

Did you have a hearing? Yes ☐ No ☐ Case Number: _____

If you had a hearing and lost, explain how your circumstances have significantly changed to now qualify your vehicle for a refund or replacement (add a separate sheet of paper if necessary).

_____

_____

_____

Please attach a copy of your Vehicle Invoice, Bill of Sale, Finance or Retail Installment Agreement or Lease Agreement, along with copies of any invoices, canceled checks, etc. evidencing amounts paid by you in connection with your purchase or lease of the vehicle [including government fees and taxes (not financed), window tinting, extended service agreement, vehicle add-ons, etc.]. Include verification of monthly payments made.

26. Did you incur any reasonable expenses (e.g., towing, rental car, repair bills, postage, etc.) as a direct result of the defect(s) for which you were not reimbursed? Yes ☒ No ☐

If yes, please attach copies of receipts, invoices, etc. However will not pursue

False official statements: Whoever knowingly makes a false statement in writing with the intent to mislead a public servant in the performance of his official duty shall be guilty of a misdemeanor of the second degree, punishable as provided in §§775.082, 775.083, and 775.084, Florida Statutes.

I hereby request arbitration of my case by the Florida New Motor Vehicle Arbitration Board. I certify that all statements made in connection with this request for arbitration are true and correct to the best of my knowledge. I understand that this document and its attachments are public records.

Signature (First Consumer) _____ Signature (Second Consumer) _____ Date 11-14-01

X. Documents

Your application will be returned to you if you did not include the following applicable documents (please check documents submitted):

- ☑ A copy of the coverage page of the warranty from the manufacturer identified in **Question 8**
- ☐ A copy of any warranty given by the conversion company identified in **Question 10**, if applicable
- ☑ Copies of relevant repair orders in your possession **(Questions 17 and 19)**
- ☑ A copy of the defect notification form or other written notification you sent to each manufacturer or conversion company **(Questions 18 and 21)**
- ☑ A copy of the postal receipt indicating when the manufacturer and/or conversion company received such notification **(Questions 18 and 21)**
- ☐ A copy of the claim filed with and postal receipt or acknowledgment letter from a manufacturer's state-certified program (if applicable) **(Question 24)**
- ☐ A copy of the decision of a manufacturer's state-certified program, if any (if applicable) **(Question 24)**
- ☑ A copy of the bill of sale, retail installment contract or lease agreement
- ☑ Copies of all receipts or invoices for items purchased in connection with your acquisition of the vehicle
- ☐ Copies of all receipts or invoices for expenses directly caused by the defect(s)

Be sure to make and keep a copy of this form and all attachments for your own records.

Return completed *original* form with *copies* of all applicable documents attached to:

Department of Agriculture and Consumer Services
Lemon Law Arbitration Screening
227 North Bronough Street
City Centre Building, Suite 7250
Tallahassee, Florida 32301
1-800-321-5366

DIA/LL-005(1/00)

Motor Vehicle Defect Notification

(Please print clearly in black ink, or type)

Pursuant to the Florida Lemon Law, notice is given to the manufacturer as follows:

☐ The vehicle has been out of service at least 15 days to repair one or more substantial defects.

☑ 3 or more repair attempts have been made to repair the same substantial defect or condition. This is notification of the final opportunity to correct the continuing substantial defect(s) or condition(s).

Description of continuing defect(s) or condition(s) Radio Reception is weak.

(NOTE: this is not a complete description; the manufacturer should assemble all appropriate information.)

Vehicle Make Mercedes Model E320 Year 2000

VIN WDBJF65J1YA [redacted] Date of Delivery May 2000

Name and City/State of selling dealer or leasing company (if applicable) Bill Ussery Motors Inc. 300 Alhambra Ave, Coral Gables, FLA

Name and City/State of authorized service agent(s) attempting previous repairs Bill Ussery Motors Inc. Coral Gables, FLA.

Consumer [redacted] Home phone [redacted]

Address [redacted] Work phone [redacted]

Miami FLA. [redacted] Signature [signature]

Date Mailed 6/1/00

White—manufacturer's copy, send by registered (return receipt requested) or express mail. Yellow—consumer's copy, keep for your records.
Pink—Attorney General's copy, send by regular mail. (1/96)

Mercedes-Benz

Mercedes-Benz USA, LLC
A DaimlerChrysler Company

May 9, 2002

Office of the Attorney General
Lemon Law arbitration Program
The Capitol
Tallahassee, FL 32399-1050

Re: Jose Carugol
Case # 2001-1093/MIA

Dear Sir/Madam:

Enclosed please find an original Settlement Terms form in the above matter.

Sincerely,

Mark H. Kelly
Counsel

MHK/mk

Cc: N. Edelman (w/encl.)

One Mercedes Drive, P.O. Box 350, Montvale, NJ 07645-0350, Phone (201) 573-0600, Fax (201) 573-0117
www.MBUSA.com

Office of the Attorney General
Lemon Law Arbitration Program

This agency is required under the Florida Lemon Law to maintain statistical information on all disputes submitted to the Florida New Motor Vehicle Arbitration Board. Such information includes prehearing settlements and their value, if applicable.

Pursuant to §681.1095(16), Florida Statutes (1997), a manufacturer must verify the settlement terms for disputes approved for arbitration when requested by this agency.

A settlement has been reported to this agency by the consumer for the case listed below. We are requesting that you complete and return this form to this agency within 10 days of its receipt. In addition to the form, you may submit any document evidencing the settlement terms entered into by your company and the consumer. The information should be faxed to (850) 488-7295 or mailed to:

Office of the Attorney General
Lemon Law Arbitration Program
The Capitol
Tallahassee, Florida 32399-1050

SETTLEMENT TERMS

MANUFACTURER Mercedes-Benz USA, Inc. CASE # 2001-1093/MIA

CONSUMER'S NAME Jose F. Caragel VIN WDBJF65J9YB102192

1. What type of settlement did your company and the consumer enter into? (Please check all that apply)

   refund ✓ replacement vehicle____ trade assistance____ repair____

   warranty extension____ buyer's certificate____ other____

   (If other, please specify_____)

2. If your company agreed to provide a replacement vehicle, indicate the type of vehicle your company provided or has agreed to provide. If your company agreed to provide trade assistance, indicate the type of vehicle the consumer acquired.

   YEAR____ MAKE N/A MODEL_____

April 30, 2002

3. If your company agreed to provide a replacement vehicle or trade assistance, please itemize the amounts, if any, the consumer paid or agreed to pay to obtain another vehicle. (e.g., offset for use; model year or different model upgrade; extra options such as larger engine, sun roof, leather, etc.)

_____ $_____

_____ _____

_____ _____

_____ _____

TOTAL PAID BY CONSUMER $_____

4. If your company provided or has agreed to provide a refund, please itemize the amounts paid to arrive at the total refund. (e.g., trade-in allowance, down payment, loan or lease payments, collateral charges, offset for use, incidental charges, etc.)

[redacted] $ 6,000-

_____ _____

_____ _____

_____ _____

_____ _____

_____ _____

TOTAL PAID TO CONSUMER $ 6,000-

5. If your company provided or has agreed to provide a refund and the original vehicle was financed or leased, what is the amount of the refund paid or to be paid to the lienholder or lessor?

$ 39,057.84

Your Name and Title [redacted]

Your telephone number [redacted]

STATE OF FLORIDA
OFFICE OF THE ATTORNEY GENERAL
FLORIDA NEW MOTOR VEHICLE ARBITRATION BOARD

[redacted]

Consumer,

vs.

MERCEDES-BENZ USA, INC.

Manufacturer.

CASE NO.: 2001-1093/MIA

ORDER DISMISSING CASE AND CLOSING FILE

THIS CASE came before the New Motor Vehicle Arbitration Board upon approval of the Consumer's request for arbitration. The hearing in this case was postponed at the Consumer's request because the parties were negotiating a settlement. The Consumer has failed to notify the Board Administrator of this matter as required by the Order postponing the hearing. Therefore, it is

ORDERED that the Consumers' request for arbitration is considered withdrawn and this case is hereby DISMISSED and the file shall be closed.

DONE and ORDERED this 30th day of April, 2002.

FLORIDA NEW MOTOR VEHICLE ARBITRATION BOARD

Copies furnished to:

Consumer

Manufacturer
Manufacturer's Attorney

HINSHAW & CULBERTSON

BELLEVILLE, ILLINOIS
CHAMPAIGN, ILLINOIS
CHICAGO, ILLINOIS
CRYSTAL LAKE, ILLINOIS
JOLIET, ILLINOIS
LAKE, ILLINOIS
PEORIA, ILLINOIS
ROCKFORD, ILLINOIS
SPRINGFIELD, ILLINOIS
WAUKEGAN, ILLINOIS

SUITE 100
WEST UNION CENTER
[illegible] ALBRIGHT
TAMPA, FLORIDA [illegible]

[illegible]

TELEFAX [illegible]

SAN FRANCISCO, CALIFORNIA
FT. LAUDERDALE, FLORIDA
JACKSONVILLE, FLORIDA
MIAMI, FLORIDA
TAMPA, FLORIDA
MUNSTER, INDIANA
MINNEAPOLIS, MINNESOTA
ST. LOUIS, MISSOURI
APPLETON, WISCONSIN
BROOKFIELD, WISCONSIN
MILWAUKEE, WISCONSIN

April 30, 2002

FILE NO.
809576

Mark Kelly, Esquire
Mercedes-Benz USA, LLC
One Mercedes Drive
Montvale, NJ 07645-0350

Re: [redacted] v. Mercedes-Benz USA, Inc.

Dear Mark:

With regard to the above-captioned matter, please be advised that the Consumer, [redacted] delivered the subject vehicle to Bill Usery Motors in Miami, Florida, on March 29, 2002. Luis Gutierrez conducted the vehicle/refund check exchange. At the time of vehicle delivery, Mr. Gutierrez arranged for [redacted] to sign an Odometer Verification Form and a Power of Attorney.

I have enclosed herein for your file copies of the following:

1. Power of Attorney;
2. Odometer Verification Form; and
3. Reacquired Vehicle Inspection Report prepared by Andrew Kambich.

As always, I forwarded the original signed settlement documents to Mr. Edleman. Should you need additional information or documentation from me, please do not hesitate to call. Once again, thank you for allowing me the opportunity to represent Mercedes-Benz USA in this matter.

Very truly yours,

Bruce W. Bennett
For the Firm

BWB/clm
Enclosures

cc: Neil Edleman (With Original Attachments)
Andrew Kambich

POWER OF ATTORNEY

VEHICLE DESCRIPTION

Year: 2000 Make: Mercedes-Benz Model: E-320W Body Type: _____ VIN: WDBJF65J8YE[redacted]

Federal Odometer Law requires that you state the mileage upon transfer of ownership. Providing false information may result in fines and/or imprisonment.

I, [redacted] _____ Appoint _____
(Print Transferor's / Seller's Name)

as my attorney-in-fact to sign all papers and documents required to secure the title and further grant the authority to endorse and transfer title thereto, and to disclose the mileage, on the title for the vehicle described above, exactly as stated in my following disclosure. I certify that the odometer now reads _____ (no tenths) miles and to the best of my knowledge that it reflects the actual mileage.

Transferor [redacted] 03-29-02
Print Name Date of Statement

Co-Transferor's _____
Seller's Signature Print Name

Transferor's _____
Street Address City State Zip Code

Transferee's _____
Buyer's Signature Print Name

Transferee's _____
Street Address City State Zip Code

Sworn to and subscribed before me this _____ day of _____, 2002.

_____
(Signature of Notary Public)

_____
(Stamp with Seal Commissioned Name of Notary Public)

NOTARY REQUIRED FOR TRANSFEROR'S / SELLER'S SIGNATURE.

STATE OF FLORIDA
DEPARTMENT OF HIGHWAY SAFETY AND MOTOR VEHICLES
DIVISION OF MOTOR VEHICLES
NEIL KIRKMAN BUILDING TALLAHASSEE, FLORIDA 32399-0610

VEHICLE IDENTIFICATION NUMBER AND ODOMETER VERIFICATION

PART A - OWNER'S VEHICLE IDENTIFICATION AFFIDAVIT AND ODOMETER DECLARATION

(Completion of this part requires a physical inspection of the vehicle by the owner)

AFFIDAVIT:

DATE March 29, 2002

This is to certify that I, the undersigned, am the lawful owner of the motor vehicle described on this form and that I have, on the date entered above, made a physical inspection of the motor vehicle and have recorded the vehicle identification number and other identification information and the odometer reading and certification in the spaces provided on this form.

VEHICLE IDENTIFICATION (MOTOR NUMBER ALL MAKES THROUGH 1954 - IDENTIFICATION NUMBER 1955 AND LATER)

Vehicle Identification Number	Year	Make	Color	Body	Previous State of Title
DB7P65J39Y[redacted]	2000	M-Benz			

ODOMETER DECLARATION

WARNING: Federal and State law requires that you state the mileage in connection with an application for a Certificate of Title. Failure to complete or providing a false statement may result in fines and/or imprisonment.

I AM [redacted] STATE THAT THIS MOTOR VEHICLE'S ☐ 5 DIGIT OR ☑ 6 DIGIT ODOMETER NOW READS ☐ 38,415 (NO TENTHS) MILES, DATE READ 03 / 29 / 02, AND TO THE BEST OF MY KNOWLEDGE THAT IT REFLECTS THE ACTUAL MILEAGE OF THE VEHICLE DESCRIBED IN THIS DOCUMENT UNLESS ONE OF THE FOLLOWING IS CHECKED:

CAUTION: DO NOT CHECK IF ACTUAL MILEAGE

☐ 1. IN EXCESS OF IT'S MECHANICAL LIMITS. I HEREBY CERTIFY THAT, TO THE BEST OF MY KNOWLEDGE, THE ODOMETER READING REFLECTS THE AMOUNT OF MILEAGE IN EXCESS OF IT'S MECHANICAL LIMITS

☐ 2. IS NOT THE ACTUAL MILEAGE. I HEREBY CERTIFY THAT THE ODOMETER READING IS NOT THE ACTUAL MILEAGE. WARNING – ODOMETER DISCREPANCY

[redacted]VE READ THE FOREGOING DOCUMENT AND THAT THE FACTS STATED IN IT

[redacted]

(Owner's Printed Name)

PART B - VERIFICATION OF VEHICLE IDENTIFICATION

(Completion of this part requires a physical inspection of the above described motor vehicle by a licensed Dealer, Florida Notary Public, Police Officer, DMV/Tax Collector Employee or Division of Motor Vehicles Inspector Completing the verification of the vehicle identification number.)

I, the undersigned, certify that I have physically inspected the above described vehicle and find that the vehicle identification number on the vehicle to be identical to the vehicle identification number recorded on this form.

Date: _____ DMV/Tax Collector Employee: _____

(SEAL)

Signature: _____ Printed Name: _____

Commissioned Name of Notary: _____ Notary Signature _____
(Print, Type or Stamp)

Agency or Dealer Name: _____ Badge # or Dealer # _____

Florida Compliance Examiner/Inspector Badge or ID Number _____

NOTICE: ANY ALTERATION OR ERASURE MAY VOID THIS DOCUMENT

HSMV 82042 (REV. 12/00) B

REACQUIRED VEHICLE INSPECTION REPORT

INSPECTION UPON TAKING POSSESSION OF THE VEHICLE FROM THE OWNER

[illegible]	[illegible]	[illegible]	[illegible]
[redacted]	[illegible]	[illegible]	36,417
[illegible]	[illegible]	[illegible]	[illegible]
[redacted]	[illegible]	[illegible]	[illegible]
[illegible]	[illegible]	[illegible]	[illegible]
[illegible]	[illegible]	303-443-[illegible]	36,417

1. DISCLOSURE - LIST ALL NON-CONFORMITIES WHICH CAUSED VEHICLE TO BE REPURCHASED:
VEHICLE IS BEING REPURCHASED AS PART OF SETTLEMENT.

2A. REPAIRS - IF ALL NON-CONFORMITIES ARE REPAIRED, WRITE "NONE". OTHERWISE, LIST ALL NON-CONFORMITIES WHICH CAUSED VEHICLE TO BE REPURCHASED AND WILL BE REPAIRED.
NONE

2B. REPAIRS - LIST REQUIRED REPAIRS, RELATING TO SAFETY AND OWNER CONVENIENCE, TO BE DONE PRIOR TO RESALE.
NONE

3. FACTORY EQUIPMENT - INVENTORY ALL OF THE FOLLOWING ITEMS AND CIRCLE:

1. BOOKS - COMPLETE SET: YES NO (IF NO, PLEASE ORDER A COMPLETE SET)
2. SERVICE BOOK STAMPED: YES NO (IF NO, PLEASE OBTAIN COPIES OF R.O. (S) FOR SVCS)
3. SPARE TIRE AND WHEEL: YES NO
4. JACK - COMPLETE SET: YES NO
5. TOOL KIT / JACK: YES NO
6. FIRST AID KIT: YES NO
7. AL WIND DEFLECTOR: YES NO

PLACE A CHECK MARK NEXT TO ANY ENTRY ACCESSORIES THE VEHICLE IS EQUIPPED WITH:

Cellular Telephone (mobile) ____ CD changer X
Cellular Telephone (portable) ____ Floor Mats X
Other ____

4. AFTERMARKET ACCESSORIES - LIST ANY NON-OE ACCESSORIES THE VEHICLE IS EQUIPPED WITH:
NONE

ESTIMATE TO RESTORE TO STOCK ANY ACCESSORIES WHICH IMPAIR THE SAFETY OR USE OF THE VEHICLE (AT OWNER'S OR INSTALLING DEALER'S EXPENSE)

5. DAMAGE - A. LIST ANY EXISTING DAMAGE TO EXTERIOR, INTERIOR OR UNDERCARRIAGE (INCLUDING DAMAGE TO A TIRE).
B. LIST ANY PREVIOUSLY REPAIRED DAMAGE TO EXTERIOR, INTERIOR OR UNDERCARRIAGE (I.E. PAINT).
A. DING IN R/R QTR. PANEL.
B. ____

ESTIMATE TO REPAIR ANY DAMAGE AS NOTED ON LINE A/B: N/A

6. VIN: CHECKED FOR ODOMETER DISCREPANCY (PLEASE CIRCLE) YES NO

COMMENTS: VIN CHECKED THERE ARE NO ODOMETER REPLACEMENTS OR DISCREPANCIES.

SCM or Technical Specialist Signature ____

CONFIRMATION OF COMPLETED REPAIRS: (FINAL INSPECTION) MBRA STAMP OFF BY: ____
TITLE / REF #: SPOR-24 DATE: 04-23-02

(revised 8/96) (inspec.wpd)

Mercedes-Benz

Mercedes-Benz USA, LLC
A DaimlerChrysler Company

March 22, 2002

VIA OVERNIGHT MAIL
Bruce W. Bennett, Esq.
C/o Hinshaw & Culbertson
First Union Center #830
100 South Ashley
Tampa, FL 33602

Re: [redacted] v. MBUSA

Dear Bruce:

Enclosed please find our settlement check in the amount of $6,000.00 with regard to the above matter.

Should you have any questions, please do not hesitate to contact me directly at 201-573-2231.

Sincerely,

Mark H. Kelly
Counsel

MHK:lpe

Enclosure

One Mercedes Drive, P.O. Box 350, Montvale, NJ 07645-0350, Phone (201) 573-0600, Fax (201) 573-0117
www.MBUSA.com

MERCEDES-BENZ USA, LLC
ONE MERCEDES DRIVE - MONTVALE, NJ 07645

Vendor Name: CARAGOL, JOSE F
Vendor No.: 109489
Check Total: $6,000.00
Check No.: [redacted]
Check Date: Mar 22, 2002

DATE	INVOICE NUMBER	DOCUMENT NUMBER	GROSS AMOUNT	DISCOUNT	NET AMOUNT
03/21/2002	SETTLEMENT2002	2200007416	6,000.00	0.00	6,000.00
			6,000.00	0.00	6,000.00

[redacted]

Six Thousand Dollars

$6,000.00

To [redacted]

TAMPA FL [redacted]

MERCEDES-BENZ USA, LLC

PER [redacted]

[redacted]

Mercedes-Benz

Mercedes-Benz USA, LLC
A DaimlerChrysler Company

March 5, 2002

VIA OVERNIGHT MAIL
Mercedes-Benz Credit
C/o Mellon Financial Services
888 South Greenville, Suite 200
Richardson, TX 75081

Attn: MBC 890634

Re: [redacted] v. MBUSA
Lease Number 013603112802390001
2000 MBCA E320W
VIN: WDBJF65J9YB[redacted]

Dear Sir/Madam:

Enclosed please find our payoff check in the amount of $39,057.84 with regard to the vehicle in the above matter.

Should you have any questions, please do not hesitate to contact me.

Sincerely,

Mark H. Kelly
Counsel

MHK:lpe

Enclosure

Bcc: N. Edelman

MERCEDES-BENZ USA, LLC
ONE MERCEDES DRIVE - MONTVALE, NJ 07645

Vendor Name	Vendor No.	Check Total	Check No.	Check Date
MERCEDES-BENZ CREDIT CORPORATION	107187	$39,057.84	[redacted]	Mar 04, 2002

DATE	INVOICE NUMBER	DOCUMENT NUMBER	GROSS AMOUNT	DISCOUNT	NET AMOUNT
03/01/2002	030102	2200005570	39,057.84	0.00	39,057.84
			39,057.84	0.00	39,057.84

MERCEDES-BENZ USA, LLC
ONE MERCEDES DRIVE - MONTVALE, NJ 07645

CHECK NO. [redacted]

03/04/2002

Thirty-nine thousand fifty-seven and 84/100 Dollars

$39,057.84

TO [redacted]

DALLAS, TX

MERCEDES-BENZ USA, LLC

FOR [redacted]

HINSHAW & CULBERTSON

MILWAUKEE, WISCONSIN
CHAMPAIGN, ILLINOIS
CHICAGO, ILLINOIS
CRYSTAL LAKE, ILLINOIS
JOLIET, ILLINOIS
LISLE, ILLINOIS
PEORIA, ILLINOIS
ROCKFORD, ILLINOIS
SPRINGFIELD, ILLINOIS
WAUKEGAN, ILLINOIS

[illegible]
FIRST UNION CENTER,
[illegible] ASHLEY,
TAMPA, FLORIDA [illegible]

[illegible]

TELEPHONE [illegible]

SAN FRANCISCO, CALIFORNIA
FT. LAUDERDALE, FLORIDA
JACKSONVILLE, FLORIDA
MIAMI, FLORIDA
TAMPA, FLORIDA
MUNSTER, INDIANA
MINNEAPOLIS, MINNESOTA
ST. LOUIS, MISSOURI
APPLETON, WISCONSIN
BROOKFIELD, WISCONSIN
MILWAUKEE, WISCONSIN

February 27, 2002

FILE NO.
808576

Via Facsimile & US Mail
Mark Kelly, Esquire
Mercedes-Benz USA, LLC
One Mercedes Drive
Montvale, NJ 07645-0350

Re: [redacted] v. Mercedes-Benz USA, Inc.
Case No. 2001-1093/MIA

Dear Mark:

With regard to the above-captioned matter, enclosed please find a copy of the current lease payoff quote from Mercedes-Benz Credit. As you will note, said quote is good through March 1, 2002. Thank you for your prompt attention to this matter.

Very truly yours,

Bruce W. Bennett

Bruce W. Bennett
For the Firm

SIGNED IN MR. BENNETT'S ABSENCE TO AVOID DELAY IN MAILING

BWB/clm

Enclosure

FAX

RECEIVED

FEB 25 2002

Mercedes-Benz Credit

To:

Company: [redacted]

Fax Number:

Phone Number:

From: Kristeen Reynolds

Fax Number: 1-800-872-3468

Phone Number 1-800-634-6222

Time Sent: Saturday, Feb 23, 2002 08:44AM

Pages: 3

Description:

Mercedes-Benz Credit

February 23, 2002

[redacted]

Miami FL[redacted]

Dear [redacted]

Re: Lease Number [redacted]
Year: 00 Make: MBCA Model: E320W
VIN: WDBJF65J9YE[redacted].

Thank you for your recent inquiry to Mercedes-Benz Credit. The payoff subject to the terms below, calculated through March 1, 2002, is $ 39,057.84.

Please mail the payoff check made payable to Mercedes-Benz Credit, a completed odometer statement (next page) and an address for title return to one of the following addresses:

Regular Mail:	Courier / Overnight Delivery:
Mercedes-Benz Credit	Mellon Financial Services
Dept. 0634	888 South Greenville, Suite 200
PO Box 120001	Richardson, TX 75081
Dallas, TX 75312-0634	Attention: MBC 890634

Sending a Cashier's Check will expedite title release by approximately 7 days. If you send a personal check, the title will be released in approximately 14 days. Please note the payoff quote is based on our records as of the date of this letter. It shall not be deemed to modify the terms of your lease agreement. It is subject to adjustments as a result of the reversal of any payment previously applied to the above account.

Should you need additional assistance, please contact our Client Service Center at (800) 654-6662.

Thank you for selecting Mercedes-Benz Credit to serve your financing needs.

Sincerely,

Kristeen Reynolds
Client Service Representative

Mercedes-Benz

Mercedes-Benz USA, LLC
A DaimlerChrysler Company

January 4, 2002

VIA TELEFAX 813-276-1956

Bruce W. Bennett, Esq.
c/o Hinshaw & Culbertson
First Union Center #830
100 South Ashley
Tampa, FL 33602

Re: [redacted] v. MBUSA

Dear Bruce:

Attached is the Consumer's Prehearing Information Sheet in the above matter.

Should you have any further questions or comments, please do not hesitate to contact me.

Sincerely,

Mark H. Kelly
Counsel

MHK/mk

One Mercedes Drive, P.O. Box 350, Montvale, NJ 07645-0350, Phone (201) 573-0600, Fax (201) 573-0117
www.MBUSA.com

****
*** TX REPORT ***
****

TRANSMISSION OK

TX/RX NO	3040
CONNECTION TEL	918132761956
SUBADDRESS	
CONNECTION ID	
ST. TIME	01/04 16:08
USAGE T	02'06
PGS.	8
RESULT	OK

Mercedes-Benz

Mercedes-Benz USA, LLC –
A DaimlerChrysler Company

January 4, 2002

VIA TELEFAX 813-276-1956

Bruce W. Bennett, Esq.
c/o Hinshaw & Culbertson
First Union Center #830
100 South Ashley
Tampa, FL 33602

Re: [redacted] v. MBUSA

Dear Bruce:

Attached is the Consumer's Prehearing Information Sheet in the above matter.

Should you have any further questions or comments, please do not hesitate to contact me.

Sincerely,

Mark H. Kelly
Counsel

MHK/mk

HINSHAW & CULBERTSON

BELLEVILLE, ILLINOIS
BLOOMINGTON, ILLINOIS
CHAMPAIGN, ILLINOIS
CHICAGO, ILLINOIS
CRYSTAL LAKE, ILLINOIS
JOLIET, ILLINOIS
LISLE, ILLINOIS
PEORIA, ILLINOIS
ROCKFORD, ILLINOIS
SPRINGFIELD, ILLINOIS
WAUKEGAN, ILLINOIS

SUITE [illegible]
FIRST UNION CENTER
[illegible] SOUTH ASHLEY
TAMPA, FLORIDA [illegible]

[illegible]
TELEFAX [illegible]

SAN FRANCISCO, CALIFORNIA
FT. LAUDERDALE, FLORIDA
JACKSONVILLE, FLORIDA
MIAMI, FLORIDA
MUNSTER, INDIANA
MINNEAPOLIS, MINNESOTA
ST. LOUIS, MISSOURI
APPLETON, WISCONSIN
BROOKFIELD, WISCONSIN
LAKE GENEVA, WISCONSIN
MILWAUKEE, WISCONSIN

TELECOPIER TRANSMISSION

DATE: March 19, 2002

MATTER NO: 909576 MATTER NAME [redacted] v. Mercedes-Benz

TO: Mark Kelly, Esquire

Telecopier No.: 201-573-0117

FROM: Bruce W. Bennett, Esq.

NO. OF PAGES (including this cover sheet): 2

COMMENTS: **Social Security Number:** [redacted]

( ) Return to (other than above)

(✓) Sent By Carrol Miller
Please call 1-813-276-233

If you do not receive the number of pages listed above, please call the number indicated above.

If you are not the intended recipient of this telefax, please send to (813) 276-1956 or call the number indicated above at our expense immediately, so that we can arrange for the return of this document to us at no cost to you. Thank you.

[redacted]

HINSHAW & CULBERTSON

February 18, 2002

809576

Mark Kelly, Esquire
Mercedes-Benz USA, LLC
One Mercedes Drive
Montvale, NJ 07645-0350

Re: [redacted] v. Mercedes-Benz USA, Inc.
Case No. 2001-1083/MIA

Dear Mark:

With regard to the above-captioned matter, enclosed please find a copy of my settlement confirmation letter to [redacted] As you will note, the Consumer refund amount is $6,000.

Also enclosed is a copy of the lease payoff quote from Mercedes-Benz Credit Corporation. Please send the lease payoff check directly to Mercedes-Benz Credit Corporation. Should you have any questions or comments regarding this matter, please do not hesitate to call.

Very truly yours,

Bruce W. Bennett
For the Firm

BWB/clm

Enclosure

HINSHAW & CULBERTSON

BELLEVILLE, ILLINOIS
BLOOMINGTON, ILLINOIS
CHAMPAIGN, ILLINOIS
CHICAGO, ILLINOIS
CRYSTAL LAKE, ILLINOIS
JOLIET, ILLINOIS
LISLE, ILLINOIS
PEORIA, ILLINOIS
ROCKFORD, ILLINOIS
SPRINGFIELD, ILLINOIS
WAUKEGAN, ILLINOIS

SUITE 800
FIRST UNION CENTER
100 SOUTH ASHLEY
TAMPA, FLORIDA 33602

813.276.1662
TELEFAX 813.276.1958

SAN FRANCISCO, CALIFORNIA
FT. LAUDERDALE, FLORIDA
JACKSONVILLE, FLORIDA
MIAMI, FLORIDA
MUNSTER, INDIANA
MINNEAPOLIS, MINNESOTA
ST. LOUIS, MISSOURI
APPLETON, WISCONSIN
BROOKFIELD, WISCONSIN
LAKE GENEVA, WISCONSIN
MILWAUKEE, WISCONSIN

TELECOPIER TRANSMISSION

DATE: March 19, 2002

MATTER NO: 809576 MATTER NAME: [redacted] v. Mercedes-Benz

TO: Lisa/Mark Kelly, Esquire

Telecopier No.: 201-673-2995

FROM: Bruce W. Bennett, Esq.

NO. OF PAGES (including this cover sheet): 2

COMMENTS: Still waiting on call Back for SSN!

( ) Return to (other than above)

(✓) Sent By Carrol Miller
Please call 1-813-276-233

If you do not receive the number of pages listed above, please call the number indicated above.

If you are not the intended recipient of this telefax, please send to (813) 276-1958 or call the number indicated above at our expense immediately, so that we can arrange for the return of this document to us at no cost to you. Thank you.

MERCEDES-BENZ USA, LLC
ONE MERCEDES DRIVE • MONTVALE, NJ 07645

Vendor Name: MERCEDES-BENZ CREDIT CORPORATION
Vendor No. 107187 | Check Total $39,057.84 | Check No. [redacted]
Check Date Mar 04, 2002

DATE	INVOICE NUMBER	DOCUMENT NUMBER	GROSS AMOUNT	DISCOUNT	NET AMOUNT
03/01/2002	030102	2200005570	39,057.84	0.00	39,057.84
			39,057.84	0.00	39,057.84

MERCEDES-BENZ USA, LLC
ONE MERCEDES DRIVE • MONTVALE, NJ 07645

Check [redacted]

Thirty nine thousand fifty seven and 84/100 dollars

$39,057.84

To MERCEDES-BENZ CREDIT CORPORATION
DEPT 0000 P.O. BOX [redacted]
DALLAS, TX 75312

MERCEDES-BENZ USA LLC

[redacted]

CHECK PICK-UP by LISA - ext. 2230

CHECK REQUISITION

Number

Due Date

PAYEE: Mercedes-Benz Credit

ADDRESS: Dept. 0634
P.O. Box 120001

Dallas, TX 75312-0634

AMOUNT: $ 39,057.84 (FIGURES) Thirty Nine Thousand Fifty Seven Dollars and 84/100 Cents (WORDS)

PURPOSE: Settlement of Florida Lemon Law Arbitration Case No. 2001-[illegible] [redacted] v. MBUSA, involving 2000 E320 VIN # WDBJF65J9YA[redacted] for alleged problems with radio system, driver's seat, dashboard, a/c vent panel, ashtray defect, crank [illegible] pulley, a/c blower, fuel gauge, transmission, sun visor, electrical, [illegible] and oxygen sensor. MBUSA to buy back vehicle.

APPROPRIATION #

SOC. SEC # OR TAX ID [illegible]-90815

(REQUIRED IF AN INDIVIDUAL OR PARTNERSHIP, NOT FOR AN EMPLOYEE)

ACCOUNTS PAYABLE MAR 1 2002

	NAME/DATE (PLEASE PRINT)	SIGNATURE
REQUESTED BY	Mark E. Kelly 3/1/02	
APPROVED BY	Anthony F. La Spada 3/1/02	
APPROVED BY (IF NEEDED)		

VOUCHER # 22-5570

VENDOR # 07117

LOC/COST CTR.	PROJECT	ACCOUNT	WBSO CAT/SUB.	CUST CAT/SUB.
100	9999	340210		

NOTE: ALL CHECK REQUISITIONS MUST HAVE SUPPORTING DOCUMENTATION ATTACHED.

345.11015088

Form MBUSA 202 (Rev. 1-93)

[redacted] ID # 196499 [redacted]

STATE OF FLORIDA
OFFICE OF THE ATTORNEY GENERAL
FLORIDA NEW MOTOR VEHICLE ARBITRATION BOARD
Lemon Law Arbitration Program
110 Southeast Sixth Street
Ninth Floor
Fort Lauderdale, Florida 33301
(954)712-4600

RECEIVED
JAN - 2 2002
CUSTOMER RELATIONS

[redacted]
MIAMI, FL [redacted]

210065-1B-
102192

Consumer,

vs.

CASE NO.: 2001-1093/MIA

Mercedes-Benz USA, Inc.
One Mercedes Drive
Montvale, NJ 07645-0350,

Manufacturer.

Original To Legal - Mary Kelly

CONSUMER'S PREHEARING INFORMATION SHEET

IMPORTANT: This form is to be completed by you and must be received, with all attachments, by the Board Administrator at the address at the top of this form, and by all manufacturers at the addresses listed above no later than five (5) days before the date of your hearing. (A Notice of Hearing giving the hearing date will be mailed to you under separate cover.) Any witnesses not included on this form must be made known in writing to the Board Administrator and all the manufacturers listed above *no later* than five (5) days before the hearing or they may not be allowed to testify. Documents not listed on and attached to this form must be received by the Board Administrator and all the manufacturers listed above at least five (5) days prior to the hearing or they will not be considered by the Board, unless the Board finds that you have good cause for not submitting them on time.

Please check all that apply:

1. _____ I will be bringing an interpreter to the hearing.

2. _____ I will be represented by an attorney at the hearing. My attorney is:

Name: _____

Former Referral 146979
137212
Sum 384340, 370425 131011

Address: _____

City: _____, State: _____, Zip: _____

Telephone:(____) _____, Fax:(____) _____

3. X I hereby request that the Board inspect or ride in the consumer's motor vehicle at the hearing. NOTE: Regardless of your answer to this question, ***please bring the vehicle and proof of insurance to the hearing.*** If the vehicle cannot be brought to the hearing, notify the Board Administrator immediately.

4. Attach copies of records, documents, affidavits, and papers you want the Board to consider. ***DO NOT*** include copies you already have sent with your Request for Arbitration.

5. I intend to call the following witnesses to testify at the hearing:

NAME	ADDRESS
[redacted]	[redacted]
	HIAMI FL [redacted]
	[redacted]
	HIALEAH FL [redacted]
	[redacted]
	HIAMI BEACH [redacted]
_____	_____
	_____

PLEASE NOTE: Listing witnesses on this form does not constitute a request for the issuance of a subpoena. If a subpoena is necessary to compel the attendance of a witness listed on this form, a separate, written request for a subpoena must be sent to the Board Administrator at the address at the top of this form. *Please refer to page 4, paragraphs (16)-(18) of "Hearings before the Florida New Motor Vehicle Arbitration Board" for more information regarding subpoenas.*

I have sent a copy of this completed document, including all attachments, to each Manufacturer listed on page one by U.S. Mail on Dec 27, 2001.

ALSO TO H.E. Bennett.

[redacted]

(Name - please print)

[redacted]

(Address)

Miami FL. [redacted]

[redacted]

(Telephone)

(DLA/LL-007)
(3/98)

SPECIAL MAILGRAM

October 12, 2001

[redacted]

Miami, Florid[redacted]

Subject: Model E320W
Serial No. 210065-1A-102197

Dear [redacted]

We are in receipt of the Motor Vehicle Defect Notification you sent to this office, which arrived October 11, 2001.

Your authorized Mercedes-Benz dealership, in conjunction with our regional manager, is in the best position to address matters of this nature on behalf of Mercedes-Benz USA, LLC. Arrangements have been made for your concerns to be reviewed on a local level; you may expect further contact shortly, if not already.

Sincerely,

Honora Duffy
National Customer Assistance Representative

Fax copy of
Both To:
Wayne Shewchuck
Spam 28/Reg 2

10/11/01 [redacted]

Customer Assistance Referral

CA Ref ID: 146979 Priors: Both Legals: No Status: PND Last Update: 10/11/2001

[redacted]

Address: [redacted] Title:

Phone: [redacted] Residence

OCON XREF:

City: Miami FL [redacted] Corres ID: 193307

Open Date: 10/11/2001 Agent: Honora Duffy Orig By: M Orig CD: HD Region: 2 Market: 6

Service Retailer: 14302	BILL USSERY MOTORS I	CORAL GABLES	FL	Assign Agent: SOM - 28
Orig Retailer: 14302	BILL USSERY MOTORS I	CORAL GABLES	FL	
Sell Retailer: 14302	BILL USSERY MOTORS I	CORAL GABLES	FL	

Disp Amt: Corr Fwd: Y Mailgram Sent: Y Hist Fwd:

DBAG VIN: 2100651E[redacted] Model: E320W 2000

World VIN: WDBJF65J9YE[redacted]

Mileage: 24233 Engine Number: 11294130683256

Prod Date: 02/18/2000 Warranty Start Date: 05/19/2000

Close Agent: Field Closing Date: 00/00/0000

Close With: Close By: Close How: Owner Satisfied:

Add'l Doc: TPR #:

Involved Information

[redacted] Miami, F[redacted]

Primary Residence

Secondary Residence

Job # 655990

Customer Assistance Referral – Full Notes

Open Date: 10/11/2001 11:54:02 Agent: Honora Duffy Note Type: PC
Primary Phone: [redacted]
Current Mileage: 24233
Warranty Start Date: 05/19/2000
Starmark Warranty: N/A
Previous CA Referrals: 131011, 137212
Previous Summary Notes: 370425, 384340

See former Cases/Sum Notes . [redacted] sent another Motor Vehicle Defect Notification (he filled it out 10/8/01, sent via Express Mail from Post Office - date stamp on envelop 10/9/01).

Customer had wrote in comments section:

"Transmission - hard shift - documented. Electrical - door locks/lights (interior) - now window/key gets locked-jammed/radio continues-weak reception. Vehicle at dealer - over 30 days of service"

Below mailgram will be sent:

October 12, 2001

[redacted]

Miami, Florida [redacted]

Subject: Model E320W
Serial No. 210065-1A-102197

Dear [redacted]

We are in receipt of the Motor Vehicle Defect Notification you sent to this office, which arrived October 11, 2001.

Your authorized Mercedes-Benz dealership, in conjunction with our regional manager, is in the best position to address matters of this nature on behalf of Mercedes-Benz USA, LLC. Arrangements have been made for your concerns to be reviewed on a local level; you may expect further contact shortly, if not already.

Sincerely,

Honora Duffy
National Customer Assistance Representative

HO 7193907 OCT 11 2001

Motor Vehicle Defect Notification (Vehicle At Dealer)

(Please print clearly in black ink, or type)

Pursuant to the Florida Lemon Law, notice is given to the manufacturer as follows: OVER 30 DAYS OF SERVICE

NO The vehicle has been out of service at least 15 days to repair one or more substantial defects.

X 3 or more repair attempts have been made to repair the same substantial defect or condition. This is notification of the final opportunity to correct the continuing substantial defect(s) or condition(s).

Description of continuing defect(s) or condition(s): TRANSMISSION - HARD SHIFT - CHUNKING SLAMMING - DIFF LOCK (WHISTLING) - 3 NEW WINDOWS / KEY GETS LOCKED - TRUNK / RADIO (MANY TIMES - WORK REPORTS)

(NOTE: this is not a complete description; the manufacturer should ascertain all appropriate information.)

Vehicle Make: Mercedes Model: E-320 Year: 2001

VIN: WDBJF65J91B[redacted] Date of Delivery:

Name and City/State of selling dealer or leasing company (if applicable): BILL USSERY MOTORS INC 300 ALHAMBRA AVE, CORAL GABLES, FL 33134

Name and City/State of authorized service agent(s) attempting previous repairs: BILL USSERY MOTORS INC - 300 ALHAMBRA AVE, CORAL GABLES FL 33134

Consumer: [redacted] Home phone: [redacted]

Address: MIAMI FLA. [redacted] Work phone:

Signature:

Date Mailed: 10-09-01

White—manufacturer's copy, send by registered (return receipt requested) or certified mail. Yellow—consumer's copy, keep for your records.
Pink—Attorney General's copy, send by regular mail. (1/99)

Mercedes-Benz

Mercedes-Benz USA, LLC
A DaimlerChrysler Company

December 5, 2001

VIA OVERNIGHT

Bruce W. Bennett, Esq.
c/o Hinshaw & Culbertson
First Union Center #830
100 South Ashley
Tampa, FL 33602

Re: [redacted] v. MBUSA
2000 E320 VIN #E[redacted]

Dear Bruce:

Enclosed is the Notice of Arbitration form and related materials in the above matter that were served upon us via certified mail on 12/3/01. We will provide you with the history file for this vehicle under cover of separate letter.

In accordance with our prior conversations, any settlement of this matter needs to be reviewed with this office for prior approval.

Should you have any further questions or comments, please do not hesitate to contact me.

Sincerely,

[redacted] Mark H. Kelly [redacted]

MHK/mk

[redacted]F
2000 E320

WDBJF65J94B[redacted]

One Me

Me

[redacted]

STATE OF FLORIDA
OFFICE OF THE ATTORNEY GENERAL
FLORIDA NEW MOTOR VEHICLE ARBITRATION BOARD
Lemon Law Arbitration Program

NOTICE OF ARBITRATION

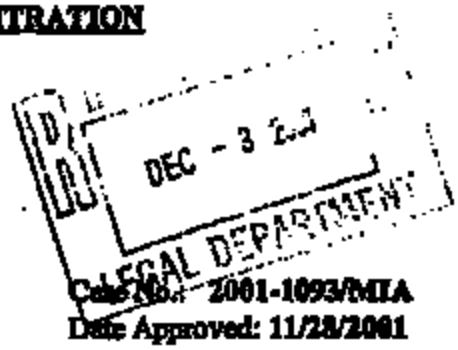

[redacted]
Miami, FL [redacted]

Consumer,

vs.

Case No.: 2001-1093/MIA
Date Approved: 11/28/2001

Mercedes-Benz USA, Inc.
One Mercedes Drive
Montvale, NJ 07645-0350,

Manufacturer.

YOU ARE HEREBY NOTIFIED that the Request for Arbitration filed by the above-named consumer has been approved for arbitration before the Florida New Motor Vehicle Arbitration Board. A hearing shall be scheduled within 40 calendar days of the date of approval indicated above. A Notice of Hearing stating the date, time and location of the hearing will be mailed to you at a later date. The case has been assigned to the Board's Miami region. The case number is 2001-1093/MIA and it shall be stated on all communications concerning this case. Please read carefully all information enclosed with this Notice. It will help you prepare and present your case to the Board. Any further questions or correspondance regarding your case, or any change of address, should be directed to Mr. Richard Scott or Ms. Beth Greenfield-Mandler, Board Administrator(s), at (954)712-4600, Office of the Attorney General, Lemon Law Arbitration Program, 110 Southeast Sixth Street, Ninth Floor, Fort Lauderdale, Florida 33301.

TO THE CONSUMER: You must submit current proof of insurance on the vehicle which is the subject of this case to the Board Administrator at the address given above prior to the date of your hearing, or bring such proof with you to the hearing. If you leased or financed your vehicle, please bring to the hearing verification of the number and amount of payments made to the lessor or lienholder. *Please read all of the information contained in this Notice.*

Arbitration hearings are open to the public. If you want to observe a hearing before attending your own, call the Board Administrator at the number above to find out whether any hearings are scheduled. For more information about the Lemon Law, please refer to the publication entitled "Consumer Guide to the Florida Lemon Law," which was given to you at the time you purchased/leased your vehicle, or visit the Attorney General's web site at http://legal.firn.edu and click on the "Lemon Law" button.

PREHEARING SETTLEMENTS: The Manufacturer may attempt to resolve a dispute with the Consumer before the hearing. This is called a settlement. The parties are free to negotiate and agree to any settlement that is satisfactory to them. It is suggested that the Manufacturer be requested to put the terms of a settlement offer in writing and that a definite time for completion of the settlement be included. If an offer is made by the Manufacturer and the Consumer would like to know how the offer compares with what the arbitration board might award during a hearing, the Consumer may contact the board administrator assigned to their case and request this information. The Consumer must contact the board administrator to advise of the settlement negotiations so that any scheduled hearing may be postponed, pending the outcome of the settlement negotiations. Settlement agreements are NOT confidential and the parties will be requested to verify the settlement terms to the Office of the Attorney General.

DISCOVERY (the exchange of information between the parties): The Manufacturer can inspect the Consumer's vehicle before the arbitration hearing according to the procedure explained at paragraphs (9) through (14) of the publication, *Hearings Before the Florida New Motor Vehicle Arbitration Board*, enclosed with this Notice, and the parties may obtain copies of documents from each other as explained at paragraph (19) of the publication. No other discovery can be conducted unless permitted by the Board.

PREHEARING INFORMATION SHEET: Both parties must complete the enclosed Prehearing Information Sheet as instructed on the Sheet. It is the responsibility of the consumer and each manufacturer to complete the Prehearing Information Sheet and mail it so as to insure that the original Sheet and all attachments are received by the Board at the address specified on the Sheet, with a copy to be received by the opposing party no later than 5 days prior to the date of the hearing. (You will receive a Notice of Hearing giving the hearing date.) If more than one manufacturer is named above, each named manufacturer must receive a copy of the Prehearing Information Sheet with attachments from the consumer and every other named manufacturer no later than 5 days prior to the date of the hearing. Be certain to retain a copy of the Prehearing Sheet and any attachments for your own use at the hearing. Any amended prehearing information sheets will be deemed to supersede all previously submitted prehearing information sheets.

SUBPOENAS: Subpoenas for witnesses or documents, if required, may be issued by the Board Administrator upon written request to the Board. You must send your written request for subpoena to the Board Administrator far enough in advance of the hearing to allow for service prior to the hearing. You do not have to know when your hearing is scheduled to request a subpoena. Upon receipt of the request, a subpoena will be issued to you at the time the hearing is scheduled. See page 4 of *Hearings Before the Florida New Motor Vehicle Arbitration Board* for further details regarding subpoena requests.

FILING VIA FACSIMILE: The filing of papers via facsimile (fax machine) is permitted only when necessary to meet a filing deadline. Facsimiles of more than 10 pages will not be accepted. All facsimile documents must be followed by original documents or "hard copies" via regular or express mail, whichever is appropriate. Facsimiles received after 5:00 p.m. Eastern Time will be considered filed the next business day.

TO THE MANUFACTURER: If the subject vehicle is a leased vehicle, please bring verification of the amount of the purchase price to the hearing. Enclosed with your copy of this Notice is a copy of the consumer's Request for Arbitration form and supporting documents, and a Manufacturer's Answer to be completed and filed with the Board Administrator at the address given on the Answer form within 15 days of your receipt of this Notice. An Answer filed by mail or courier service will be considered to be filed when postmarked by the United States Postal Service or when the courier's shipping date is affixed. No other form is permitted.

The Board Administrator will send a copy of the Manufacturer's Answer to the consumer upon receipt of the completed form. If more than one manufacturer is named in this Notice, then each manufacturer must serve a copy of the Manufacturer's Answer upon the other. Any amendments to the Answer must be served upon the consumer and any other manufacturer, if applicable, by the manufacturer whose Answer is amended.

PLEASE NOTE: Arbitration is an informal process; it is not court. Most issues involved in the claim will be addressed at the arbitration hearing, unless otherwise provided in the Board's procedures or deemed necessary by the Board.

IMPORTANT: You should retain and bring to the hearing copies of all forms and documents you have submitted. If you have not done so and are in need of additional copies, you should contact your Board Administrator at (954)712-4600, and request copies far enough in advance of the hearing to allow for receipt prior to the hearing date. The Consumer should plan to bring the motor vehicle to the hearing. If this is not possible, notify the Board Administrator immediately.

(1/99)

STATE OF FLORIDA
OFFICE OF THE ATTORNEY GENERAL
FLORIDA NEW MOTOR VEHICLE ARBITRATION BOARD
Lemon Law Arbitration Program
110 Southeast Sixth Street
Ninth Floor
Fort Lauderdale, Florida 33301
(954)712-4600

[redacted]
Miami, FL [redacted]

Consumer,

vs. **CASE NO.: 2001-1093/MIA**

Mercedes-Benz USA, Inc.
One Mercedes Drive
Montvale, NJ 07645-0350,

Manufacturer.

MANUFACTURER'S PREHEARING INFORMATION SHEET

IMPORTANT: This form is to be completed by you and must be received, with all attachments, by the Board Administrator at the address at the top of this form, and by the consumer and all manufacturers at the addresses listed above no later than five (5) days before the date of your hearing. (A Notice of Hearing giving the hearing date will be mailed to you under separate cover). Any witnesses not included on this form must be made known in writing to the Board Administrator and the consumer listed above *no later than* five (5) days before the hearing or they may not be allowed to testify. Documents not listed on and attached to this form must be received by the Board Administrator and the consumer listed above at least five (5) days prior to the hearing or they will not be considered by the Board, unless the Board finds that you have good cause for not submitting them on time.

Please check all that apply:

1. _____ The Manufacturer's representative will bring an interpreter to the hearing.

2. _____ The Manufacturer will be represented at the hearing by the attorney identified below:

Name:_____

Address:_____

City:_____, State:_____, Zip:_____

Telephone:(____)_____, Fax:(____)_____

3. _____ On behalf of the Manufacturer, I hereby request that the Board inspect or ride in the consumer's motor vehicle at the hearing.

4. Attach copies of records, documents, affidavits, and papers you want the Board to consider. ***DO NOT*** include copies previously sent to the Board, or previously received by the manufacturer with the consumer's Request for Arbitration.

5. The Manufacturer's representative/attorney intends to call the following witnesses to testify at the hearing:

NAME/TITLE	ADDRESS

PLEASE NOTE: Listing witnesses on this form does not constitute a request for the issuance of a subpoena. If a subpoena is necessary to compel the attendance of a witness listed on this form, a separate, written request for a subpoena must be sent to the Board Administrator at the address at the top of this form. *Please refer to page 4, paragraphs (16)-(18) of "Hearings before the Florida New Motor Vehicle Arbitration Board" for more information regarding subpoenas.*

I have provided a copy of this completed form, including all attachments, to the consumer and to all other Manufacturers listed on page one by U.S. Mail on _____, 20____.

_____
(Company Name)

By:_____
(Signature)

_____
(Name - please print)

_____
(Title)

_____
(Address)

_____

_____
(Telephone)

(DLA/LL-007a)
(3/98)

For Office Use:
Postmark: _____

STATE OF FLORIDA
OFFICE OF THE ATTORNEY GENERAL
FLORIDA NEW MOTOR VEHICLE ARBITRATION BOARD
Lemon Law Arbitration Program
110 Southeast Sixth Street
Ninth Floor
Fort Lauderdale, Florida 33301
(954)712-4600

[redacted]
Miami, FL [redacted]

Consumer,

vs.

CASE NO.: 2001-1893/MIA

Mercedes-Benz USA, Inc.
One Mercedes Drive
Montvale, NJ 07645-0350,

Manufacturer.

MANUFACTURER'S ANSWER

I, representative of Manufacturer, acknowledge receipt of the Consumer's Request for Arbitration.

I assert no defense and hereby offer to provide: (check one) _____ a refund of $_____; _____ a replacement motor vehicle acceptable to the consumer as defined in 681.102(22), Florida Statutes. Less the offset provided by law.

The Consumer is not entitled to relief for the following reasons: (check all that apply)

_____ The Request for Arbitration was not filed within 60 days after the expiration of the Lemon Law rights period, or 30 days after the final action of a certified procedure (if applicable), whichever date occurred later.

_____ The Consumer did not submit the claim to the manufacturer's state-certified informal dispute settlement procedure prior to filing the Request for Arbitration.

_____ The alleged nonconformity does not substantially impair the use, value or safety of the motor vehicle.

_____ The alleged nonconformity was the result of _____ an accident, ____ abuse, ____ neglect or _____ unauthorized modifications or alterations of the motor vehicle by persons other than the manufacturer or its authorized service agent. (Check all that apply).

_____ The claim by the consumer is not filed in good faith.

_____ Other (specify): _____

_____

_____

_____ I hereby request the right to view the consumer's motor vehicle. See, "Hearings Before The Florida New Motor Vehicle Arbitration Board," pp. 3-4.

_____ In the event the Board should decide in favor of the consumer and award a replacement motor vehicle, such a vehicle, as defined in 681.102(22), Florida Statutes, will be available.

The Manufacturer's agent or attorney whose name appears below should be the person to whom notices, correspondence or communication in regard to this case should be addressed:

NAME: _____

ADDRESS: _____

_____

_____

TELEPHONE: ( ) _____ FAX: ( ) _____

I HEREBY CERTIFY that the assertions made in the foregoing Answer are true and correct to the best of my knowledge and belief and that the Answer has been sent to the Board and to all other Manufacturers named in this case by U.S. Mail on _____, 20___.

By:_____
Manufacturer Agent/Attorney
Signature

_____
(Type name)

_____
(Title)

IMPORTANT: This form must be filed with the Board Administrator at the address given at the top of this form no later than 15 days from the date of receipt of the Notice of Arbitration. Failure to use this form will result in the answer being considered untimely filed. If filed by mail, the United States Postal Service postmark will be the filing date; or, if a courier service is used, the shipping date of the courier service will be the filing date.

Affirmative defenses not timely raised in this form, an attachment to it, or in a timely filed amended Answer cannot be raised at the hearing unless permitted by the Board.

NOTE: Any amendments to this Answer must be filed with the Board Administrator and served upon the Consumer and any other named Manufacturers in this case by no later than 5 days prior to the hearing.

For Office Use:
Copy mailed to Consumer
on: _____(date)
By: _____(initials)

(DLA/LL-006, 6/96)

W310-1023

COPY

JUL - 2 2008

CVT

COURT OF COMMON PLEAS
HAMILTON COUNTY, OHIO

[redacted]

PLAINTIFF

-- vs --

The letter number on all future pleadings

No. [redacted]

[redacted]

DEFENDANT

MERCEDES OF NORTH AMERICA
1 MERCEDES DRIVE
NORWOOD NJ 07648

D-2

You are notified
that you have been named Defendant(s) in a complaint filed by

[redacted]

CINCINNATI OH [redacted]

Plaintiff(s)

In the Hamilton County, COMMON PLEAS COURT Division.
GREGORY HARTMANN, 200 MAIN STREET ROOM 314,
CINCINNATI, OH 45202.
You are hereby summoned and required to serve upon the plaintiff's Attorney, or upon the plaintiff, if he/she has no attorney of record, a copy of an answer to the complaint within twenty-eight (28) days after service of this summons on you, exclusive of the day of service. Said answer must be filed with the Court within three (3) days after the service of a copy of the answer on the plaintiff's attorney.

If you fail to appear and defend, judgment by default will be rendered against you for the relief demanded in the attached complaint.

[redacted]
Clerk, Court of Common Pleas
Hamilton County, Ohio

Name and Address of Attorney
JOHN THOMAS TURNER JR
4281 MONTGOMERY ROAD
CINCINNATI OH 45212

By [redacted]
Deputy

Friday, July 2, 2008

[redacted]
25523149

[redacted]

In The
HAMILTON COUNTY COURT OF COMMON PLEAS
Hamilton County, Ohio

[redacted] Plaintiff, vs. Mercedes Benz of Cincinnati, LLC, a.k.a. Dana Motors, & Mercedes Benz of North America, Defendants.	Case No. A0304961 COMPLAINT

FILED
2001 JUL -1 A 7:30
CLERK OF COURTS
HAMILTON COUNTY, OHIO

Now comes [redacted], by and through undersigned counsel and, as her Complaint, alleges as follows:

1. For all times relevant [redacted] hereinafter Plaintiff, has been a resident of Hamilton County, State of Ohio.

2. For all times relevant Mercedes Benz of Cincinnati, LLC, hereinafter Dana or Dana Motors, has been located in Hamilton County, State of Ohio.

3. Mercedes Benz of North America, hereinafter Mercedes, manufactures motor vehicles and sells them throughout the United States.

4. Mercedes Benz of North America maintains a dealer network and through that network markets its vehicles in the State of Ohio.

5. Mercedes Benz of North America is subject to this Court's jurisdiction through Ohio's Long Arm statute. See, Kontsevoy v. Simonson (1996), 109 Ohio App. 3d 367, 370,

[redacted] v. Mitchell's Formal Wear, Inc. (1990), 53 Ohio St.3d 73, 76, 559 N.E.2d 477, 480.

6. Sometime in early 1998 Plaintiff purchased a 1998 ML320 Mercedes Benz manufactured by Mercedes from Defendant Dana. The purchase was memorialized in writing on Ohio Certificate of Title No. 3 [illegible] showing that on January 21, 1998, [redacted] Coughlin purchased a 1998 ML3 VIN 4JGAB54E6W[redacted] with 604 miles on the odometer for $43,930.00 from Dana Motor Company LLC.

7. The vehicle came with a new car warranty issued by defendant Mercedes Benz of North America.

8. The ML320 was not trouble free and Plaintiff had to return it periodically for repair under the manufacturer's warranty.

9. Unfortunately the source of the problems proved elusive and Dana was unable to diagnose and properly repair them.

10. Eventually the warranty period ran and the car was no longer covered under Mercedes' new car warranty.

11. On or about April 2, 2002, Plaintiff took her ML320 to Dana complaining of a ticking noise underneath the hood.

12. Dana replaced the water pump, antifreeze and serpentine belt. Dana charged the Plaintiff $735.47 for the repair. Plaintiff's Exhibit A.

13. While the original noise was no longer present another noise was evident when the Plaintiff picked up her car. Plaintiff had to return her car a second time to have the new

again repaired.

14. On or about June 23, 2002, the Plaintiff's ML320 broke down again. This time the power steering failed.

15. The plaintiff called the Mercedes and service dealer. When the tow truck driver arrived he checked under the hood.

16. The harmonic balance wheel had split in two. The harmonic balance wheel drives the serpentine belt which, in turn, drives the power steering pump. Plaintiff's Exhibits B, C.

17. The tow truck driver took the vehicle to Dana for repair.

18. Dana gave the Plaintiff a written estimate for $1,247.50 to repair her car. Plaintiff's Exhibit D.

19. Plaintiff was told that the parts on the written estimate were necessary because they were no longer able to perform the functions for which they were designed, i.e., they were broken.

20. Plaintiff asked that all parts be returned to her.

21. Dana thereafter told Plaintiff that they were unable to get one of the parts necessary to repair her vehicle because Mercedes had redesigned that part.

22. Dana told Plaintiff that the redesigned part would require additional work and would require another new water pump. That redesigned part was the timing chain cover and water pump housing.

23. Dana told Plaintiff that all parts and work were necessary to assure that the vehicle would run as it should, i.e., that the vehicle would not run properly unless the parts were replaced.

24. When Plaintiff went to pick up her car, she was given a revised bill for $2,862.67. Plaintiff's Exhibit B.

25. When Plaintiff's agent went to pick up the parts from plaintiff's car, numerous parts were missing.

26. Defendant's service department was notified that all of the parts listed on the invoice were not returned as requested and the service department was asked where the missing parts were.

27. Dana did not have an explanation and made no attempt to supply the missing parts. The service department's attitude was unchanged even when notified that plaintiff specifically asked that all parts be returned and that several parts were missing.

FIRST CAUSE OF ACTION - VIOLATION OF CONSUMER PROTECTION STATUTE

28. Plaintiff restates paragraphs one through twenty-seven as if fully rewritten herein.

29. Regulations make it "a deceptive act or practice" in a consumer transaction for a supplier to fail to render to the consumer any replaced parts." Ohio Adm.Code 109:4:3-13(C)(13). See also Yancey v. Capital Lincoln-Mercury Sales, Inc. (1993), 88 Ohio App.3d 128, 623 N.E.2d 177.

30. Dana is a "supplier" as defined in R.C. 1345.01(C).

31. Plaintiff is a "consumer" as defined in R.C. 1345.01(D).

32. By refusing to return or failing to return the replaced parts Dana has committed an Unfair or Deceptive Consumer Sales Practice as defined in R.C. 1345.02. See Vaccaro, supra.

33. Plaintiff is entitled to treble damages as a result of Dana's violation of R.C. 1345.01, et seq. See, R.C. 1345.09(B), R.C. 1345.03, R.C. 1345.09(A)(3), Vaccaro, supra.

34. Plaintiff is entitled to reasonable attorney fees. See, R.C. 1345.09(F)(2).

SECOND CAUSE OF ACTION - VIOLATION OF CONSUMER PROTECTION STATUTE

35. Plaintiff restates paragraphs one through thirty-four as if fully rewritten herein.

36. When Dana repaired Plaintiff's automobile, they told her she needed a new lower oil pan.

37. An oil pan has two functions, viz, it keeps dirt out of the crankcase and it keeps oil in the crankcase.

38. There were no holes in Plaintiff's oil pan. There were no cracks in Plaintiff's oil pan. Plaintiff's oil pan did everything an oil pan is supposed to do and there was no reason to replace it. Plaintiff's Exhibits F through P.

39. Even though Plaintiff's oil pan kept the dirt out and kept the oil in, Dana insisted that she needed a new oil pan. It is an unfair or deceptive consumer sales practice to assert that a replacement or repair is needed if it is not. R.C. 1345.02(B)(7).

40. Plaintiff gained no functional benefit and Dana violated R.C. 1345.02(B)(7).

THIRD CAUSE OF ACTION - VIOLATION OF CONSUMER PROTECTION STATUTE

41. Plaintiff restates paragraphs one through forty as if fully rewritten herein.

42. When Dana repaired Plaintiff's automobile, they told her she needed a new timing case.

43. A timing case/timing chain cases/water pump housing, keeps dirt out of the engine and keeps engine fluids in the engine.

44. There was nothing wrong with Plaintiff's timing case because it kept dirt out of the engine and fluids in the engine. Plaintiff's Exhibits Q through U.

45. It is an unfair or deceptive consumer sales practice to state that a replacement or repair is needed if it is not. R.C. 1345.02(B)(7).

46. The Plaintiff's timing case did what it was supposed to do, viz. keep dirt out of the engine and keep fluids in the engine.

47. Dana committed an unfair or deceptive consumer sales practice by replacing Plaintiff's timing case when the old one did what a timing case is supposed to do. R.C. 1345.02(B)(7).

FOURTH CAUSE OF ACTION - VIOLATION CONSUMER PROTECTION STATUTE

48. Plaintiff restates paragraphs one through forty-seven as if fully rewritten herein.

49. Dana originally presented Plaintiff with an estimate for $1,247.40. Plaintiff's Exhibit D.

50. When Plaintiff went to pick up her car, she was given a bill for $2,382.47. Plaintiff's

Exhibit B

51. When Dana presented Plaintiff with the original estimate, it implied that a price advantage existed, *i.e.*, Dana invited Plaintiff to contract with it for the repair work by offering an estimate.

52. However, when Dana presented Plaintiff with the final bill, it was apparent that there was no price advantage, *i.e.*, bait and switch.

53. It is an unfair or deceptive consumer sales practice to represent that a price advantage exists if it does not. R.C. 1345.02(B)(8).

54. Dana violated the consumer protection statute by suggesting that a price advantage existed when it did not. R.C. 1345.02(B)(8).

FIFTH CAUSE OF ACTION — VIOLATION CONSUMER PROTECTION STATUTE

55. Plaintiff restates the allegations contained in paragraphs one through fifty-four as if fully rewritten herein.

56. When Mercedes manufactured Plaintiff's automobile, it invited consumers to purchase that class of vehicles by alleging that they were reliable, *i.e.*, Mercedes advertised that its cars were reliable.

57. When Mercedes manufactured Plaintiff's vehicle it implicitly held itself out as being able to supply repair parts in sufficient quantity and of sufficient quality to ensure that the purchasers would not be inconvenienced, *i.e.*, Mercedes supplies repair parts and represents that it can supply the necessary parts to repair the vehicles it manufactures.

58. Mercedes breached its duty to supply the necessary repair parts because it could not supply the correct part to repair the Plaintiff's vehicle but, instead, offered a redesigned part and told Plaintiff that the correct part was unavailable.

59. Due to Mercedes failure to maintain a correct inventory of parts necessary to repair ML320s Plaintiff was forced to pay a higher amount and Plaintiff was forced to pay for additional labor that would not have been necessary otherwise.

60. Mercedes violated Ohio's Consumer Protection Statutes by supplying an automobile with the implied warranty that the necessary parts for repair would be available and thereafter refusing to supply the correct parts and, instead, offering some part that was not a copy of the original.

SIXTH CAUSE OF ACTION – BREACH WORKMANLIKE DUTY

61. Plaintiff restates paragraphs one through sixty as if fully rewritten herein.

62. Plaintiff has regularly maintained the vehicle by adhering to the service schedule recommended by Mercedes.

63. Plaintiff customarily had the factory recommended service done by Dana.

64. On April 2, 2002, Dana replaced Plaintiff's water pump. Plaintiff's Exhibit A.

65. At that time Dana's mechanics replaced the serpentine belt. Plaintiff's Exhibit A.

66. In order to replace the serpentine belt and the water pump Dana's mechanic had to work on or around Plaintiff's harmonic balance wheel, i.e., the serpentine belt goes around the harmonic balance wheel and the mechanic had to wrap the belt around the wheel and

apply pressure to the harmonic balance wheel via the pressure bolt when installing the water pump.

67. Either the mechanic breached a duty of workmanlike care by not properly inspecting Plaintiff's harmonic balance wheel or the mechanic breached a duty of workmanlike care by not contacting the service department to let them know the plaintiff of the need for a harmonic balance wheel or Dana's service department breached a duty of workmanlike care by failing to notify Plaintiff that the harmonic balance wheel was about to fail.

68. If Dana had replaced the water pump in a workmanlike fashion it would have spotted the problem harmonic balance wheel. Dana's service department was not acting in a workmanlike manner because a competent mechanic behaving in a workmanlike fashion would have spotted the problem when he was replacing the water pump.

69. Dana's service department was not performing in a workmanlike fashion because, if it was, it would have located the worn harmonic balance wheel before it failed a mere 4,000 miles later. Had Dana acted in a workmanlike fashion, the harmonic balance wheel would have been replaced for less than $200. Dana's failure to perform in a workmanlike manner resulted in injury to the plaintiff through additional costs.

70. Dana breached a duty to perform in a workmanlike fashion by failing to properly inspect Plaintiff's harmonic balance wheel when the mechanic was working on or in the vicinity of that wheel. In the alternative, Dana breached a duty to perform in a workmanlike fashion by failing to alert the Plaintiff that his harmonic balance wheel was about to fail.

SEVENTH CAUSE OF ACTION — VIOLATION OF CONSUMER PROTECTION STATUTE

71. Plaintiff restates paragraphs one through seventy as if fully rewritten herein.

72. Dana's service department told Plaintiff that certain repairs were necessary when they were not. More specifically, Dana told Plaintiff that all replacement parts, and the labor necessary to replace those parts were necessary when those parts were fulfilling their intended purpose.

73. Dana's service department was in a position to know that the parts it recommended replacing were not broken and that the Plaintiff would not derive a benefit from the replacement of those parts but that Dana would benefit financially by convincing the Plaintiff to replace those parts.

74. Dana's service department knew that the Plaintiff was likely to rely on its statements.

75. Dana violated the consumer protection statutes by knowingly making a misleading statement of opinion on which the consumer was likely to rely to her detriment.

76. Dana was in a position to know that a normal consumer would rely on its representations and those representations would mislead a normal consumer to purchase parts and labor that were not necessary for the proper repair of his car.

77. Simply stated, a normal person is not familiar with automotive design and will not know which parts are necessary to properly repair his car. Dana, however, is familiar with automotive design and took advantage of its superior knowledge by replacing parts it knew were not necessary for the operation of the vehicle.

78. Specifically, Dana misled the Plaintiff to her detriment and to its benefit by telling the Plaintiff that it was necessary to replace anything other than the inexpensive balance wheel.

79. Dana violated the consumer protection statutes by making misleading representations with expectation that the consumer would rely on those representations to her detriment.

EIGHTH CAUSE OF ACTION — FAILURE TO REPAIR IN A WORKMANLIKE FASHION

80. Plaintiff restates paragraphs one through seventy-nine as if fully rewritten herein.

81. After picking up her car from Dana, Plaintiff noticed that it began consuming oil.

82. Before Dana worked on Plaintiff's car, it did not use oil.

83. Not long after the Plaintiff picked up her car, the check engine light came on. The check engine light remains on but, prior to the repairs performed by Dana, the check engine light never came on.

84. When Plaintiff begins to complain about the expense of repair and the oil consumption, Dana tried to sell her a new car instead of properly repairing the existing problem.

85. There is no reason for the Plaintiff's vehicle to begin using oil unless the repairs were not performed in a workmanlike manner.

86. Dana breached a duty to repair in a workmanlike fashion because there are now additional problems which cannot reasonably be explained as normal wear and tear.

NINTH CAUSE OF ACTION — FAILURE TO REPAIR IN WORKMANLIKE FASHION

87. Plaintiff restates the allegations contained within paragraphs one through eighty-six as if fully rewritten herein.

88. Before Dana replaced plaintiff's harmonic balancer, when the vehicle did not use an intermediate amount of oil.

89. After Dana replaced the harmonic balance wheel the vehicle started using oil.

90. Dana has repeatedly changed the oil on the vehicle and added oil when the indicator shows that the vehicle is low on oil.

91. Plaintiff's vehicle requires synthetic oil and failure to put the correct type of oil in the engine will result in excessive oil consumption.

92. Mercedes recommends synthetic oil only due to the engine design.

93. The use of improper oil followed by excessive oil consumption and oiling problems is a cause and effect already documented in the a class action suit. See O'Keefe v. Mercedes Benz USA, LLC United States District Court for the Eastern District of Pennsylvania Case No. 01-2002.

94. Had the correct oil been installed in plaintiff's vehicle, it would not use an excessive amount of oil.

95. Mercedes Benz of North America knew or should have known that using a non-synthetic oil would cause premature engine problems and excessive oil consumption. Mercedes Benz of North America designed the engine.

96. Mercedes Benz of North America did not immediately notify its dealers and customers that use of a non-synthetic oil would be detrimental.

97. By the time Mercedes Benz of North America notified its dealers and customers regarding the need for synthetic oil only, Dana had already installed non-synthetic oil in Plaintiff's car on at least one occasion.

98. Mercedes Benz of North America breached a duty by failing to immediately inform its customers and dealerships that its engines required synthetic oil only.

99. In the alternative, Dana breached a duty to install only synthetic oil in Plaintiff's vehicle.

100. Failure to use synthetic oil only results in excessive oil consumption and premature engine failure.

101. Due to the excessive oil consumption the engine will have to be overhauled.

WHEREFORE, Plaintiff respectfully asks this Honorable Court to find that the Defendants have violated R.C. 1345.01, et seq., as alleged above and that this Honorable Court award her $2,862.67 plus treble damages as required under Ohio's Consumer Protection statutes, plus attorney fees as required under Ohio's Consumer Protection statutes, further, Plaintiff asks that this Court award an amount sufficient to properly repair the engine in plaintiff's car, plus the costs of these proceedings, plus punitive damages due to Defendant's egregious and purposeful actions designed to take advantage of a consumer unfamiliar with the workings of an automobile, plus any other remedy this Court deems fair and just. Plaintiff respectfully asks this Honorable Court to find that Defendants' unconscionable conduct has resulted in damages which shall be determined at time of trial. Plaintiff further asks that this Honorable Court award declaration of value and sufficient money to cover the cost of rental vehicles necessitated by Defendants' failure to provide her with reliable transportation and advertised and as promised.

John K. Linnell (0058511)
6553 Montgomery Road
Cincinnati, Ohio 45212
(513) 531-3636
Fax (513) 531-0135

TO THE CLERK OF COURTS

Pursuant to the Ohio Rules of Civil Procedure please serve the foregoing Complaint upon the herein named defendants: Mercedes of Cincinnati, LLC at 8727 Montgomery Road, Cincinnati, Ohio 45236 and Mercedes of North America at Mercedes Benz USA, LLC, 1 Mercedes Drive, Montvale, New Jersey 07645.

Jeffrey Lipsitz (0058351)

FROM [illegible]

FAX NO. [illegible]

[illegible] 2002 [illegible]

[redacted]

[illegible] Mercedes-Benz

INVOICE

Mercedes-Benz of Cincinnati, LLC

CINCINNATI, OH
HOME: [redacted] BUS: [redacted]

PAGE 1

SERVICE ADVISOR: 724 [illegible]

744/203 98 MERCEDES-BENZ ML320 [redacted] 79474/79474 T744

[illegible]

[illegible]		LIST	NET	TOTAL

1 112-200-15-01 WATER PUMP 400.40 400.40 400.40

1 013-997-87-92 V-BELT 45.00 45.00 45.00

PRESSURE TEST COOLING SYSTEM REPLACE WATER PUMP AND POLY BELT [illegible]

THANK YOU

[illegible]

CUSTOMER COPY

Plaintiff's Exhibit A

Plaintiff's Exhibit 3

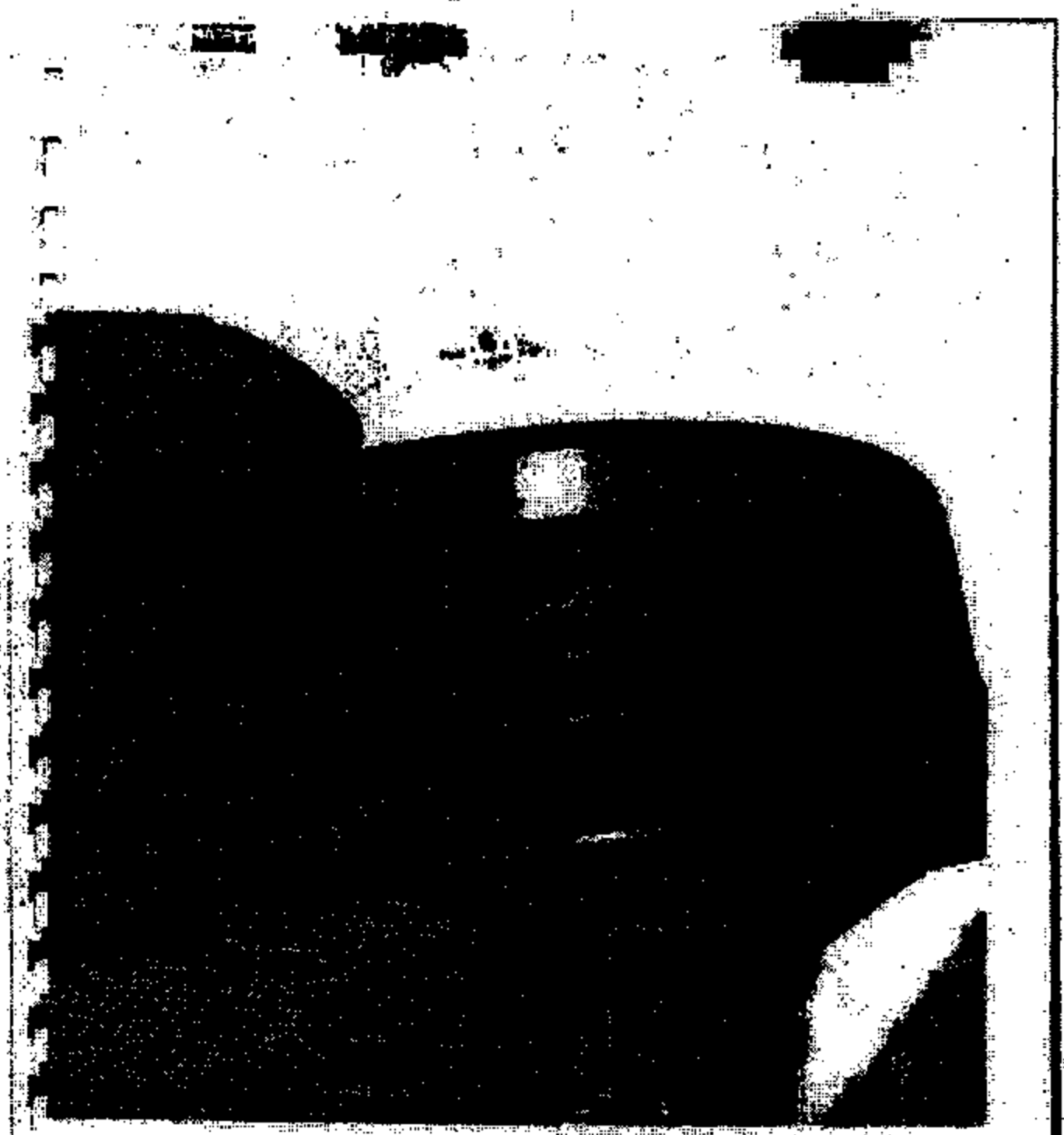

Mercedes-Benz

Mercedes-Benz of Cincinnati

[redacted]

OPERATION	PART NO.	AMOUNT	LABOR HR.	AMOUNT	TOTAL
	PARTS TOTAL		LABOR TOTAL		
			SHOP CHARGES		
			TOTAL		
			TAX		
			GRAND TOTAL		

ESTIMATE PREPARED BY

[redacted]

THIS IS AN ESTIMATE, BASED ON OUR VISUAL INSPECTION, AND DOES NOT COVER ADDITIONAL PARTS OR LABOR WHICH MAY BE REQUIRED AFTER THE REPAIRS HAVE BEEN STARTED. QUOTATIONS ON PARTS AND LABOR ARE SUBJECT TO CHANGE.

[redacted]

Mercedes-Benz

[redacted]

SERVICE ADVISOR:

[redacted]

205 CPO			1343.50	1343.50	
1 006-984-70-04 SCREW	4.00	4.00	4.00		
1 112-010-07-33 TENSIONER	273.00	273.00	273.00		
2 112-997-98-45 SEAL RING	2.10	2.10	4.20		
2 003-989-73-33-10 SEALING RING	16.10	16.10	32.20		
2 000000-001114 SCREW	2.50	2.50	5.00		
1 910143-000611 SCREW	2.82	2.82	2.82		
1 910143-000610 SCREW	3.40	3.40	3.40		
1 630-140-31-09 FILTER ELEMENT	9.35	9.35	9.35		
1 112-016-03-21 GASKET	19.55	19.55	19.55		
2 112-016-06-30 EXPANSION PL	7.08	7.08	7.08		
1 626-997-98-45 SEAL RING	8.53	8.53	8.53		
1 000-466-38-69 GASKET	2.40	2.40	2.40		
1 8201 CLAMP	1.14	1.14	1.14		
2 3065 CLAMP	1.69	1.69	3.38		
2 1260 CLAMP	1.75	1.75	3.50		

[redacted]

[redacted]

Plaintiff's Exhibit E(1)

[redacted] [redacted] [redacted]

FROM: FAX NO.: Jul. 18 2003 [illegible]

Mercedes-Benz

[redacted]

CINCINNATI, OH [redacted]

HOME [redacted]

INVOICE

PAGE 3

Mercedes-Benz of Cincinnati, LLC

[illegible]

SERVICE ADVISOR: 134 [illegible]

[illegible]	98	MERCEDES BENZ ML320	[redacted]		74781/74781	[illegible]
[illegible]			[illegible]		[illegible]	[illegible]

[illegible]

	[illegible]	[illegible]	[illegible]
2 2012 CLAMP	[illegible]	[illegible]	[illegible]
2 24113 1-3/4 HOSE CLAMP	[illegible]	[illegible]	[illegible]
1 [illegible] POWER STEER	[illegible]	[illegible]	12.[illegible]
2 SYNTHETIC OIL	[illegible]	[illegible]	[illegible]
[illegible]		[illegible]	[illegible]

NOISE IS A BROKEN FRONT CRANKSHAFT BALANCER/PULLEY. REMOVED THE COOLANT [illegible] INSTALLED A NEW UPPER HALF OIL PAN. INSTALLED A NEW LOW OIL LEVEL [illegible] NEW WATERPUMP ASSY. INSTALLED A NEW POLY V BELT. INSTALLED A NEW [illegible] INSTALLED A NEW LEFT CAM COVER BREATHER HOSE. NOTE, THERE IS A [illegible] NOTED [illegible] THE [illegible]. [illegible] WERE [illegible] AND THE ENGINE WAS [illegible] A LITTLE [illegible] THEY WERE OF [illegible]. THE MILEAGE OUT IS 74,794.

[illegible] TOWING CHARGE

[illegible]	[illegible]	[illegible]
[illegible]	67.14	67.14

C** CLIENT STATES TO CHECK FOR LIGHTS OUT

[illegible]		[illegible]	[illegible]
1 [illegible] FUSE [illegible]	[illegible]	[illegible]	[illegible]

[illegible]

CLIENT COPY

Plaintiff's Exhibit [illegible]

[redacted] [redacted] [redacted]

FROM : [illegible]

FAX NO. :

Jul. 31 [illegible] P6

Mercedes-Benz

[illegible]

247618

INVOICE

Mercedes-Benz of Cincinnati, LLC

[illegible]

DUPLICATE 2
PAGE 1

[redacted]

CUST. [illegible]

HOME: [redacted] BUS: [redacted]

SERVICE ADVISOR: 335 [illegible]

744/108	98	MERCEDES BENZ ML320	[redacted]		74791/74791	7388

23OCT1997			16:30 01JUL02			C/S	01JUL2002

OPTIONS: ENG:6243 TRN:[illegible]

21JUN02	01JUL02

LINE OPCODE TECH TYPE HOURS LIST NET TOTAL

INSTALLED A NEW LEFT REAR BRAKE LIGHT BULB.

THE CLIENT STATES TO CHECK BRAKES

40W CPBR 20.50 20.50

CHECK HAS APP. 30 TO 35% PAD WEAR LEFT. THE CLIENT STATES TO NOT

CAUSE: NEW STYLE

40R WRN N/C

THANK YOU

[illegible]

LABOR AMOUNT	[illegible]
PARTS AMOUNT	[illegible]
GAS, OIL, LUBE	0.00
SUBLET AMOUNT	[illegible]
MISC. CHARGES	[illegible]
TOTAL CHARGES	[illegible]
LESS INSURANCE	0.00
SALES TAX	[illegible]
PLEASE PAY THIS AMOUNT	[illegible]

CLIENT COPY

Plaintiff's Exhibit E(3)

Plaintiff's Exhibit 9

FIGURE 2. [illegible]

Plaintiff's Exhibit 8

Plaintiff's Exhibit

Plaintiff's Exhibit 2

Plaintiff's Exhibit 6

[redacted]

Plaintiff's Exhibit 1

[redacted]

Plaintiff's Exhibit 2

[illegible]

Plaintiff's Exhibit 9

Plaintiff's Exhibit K

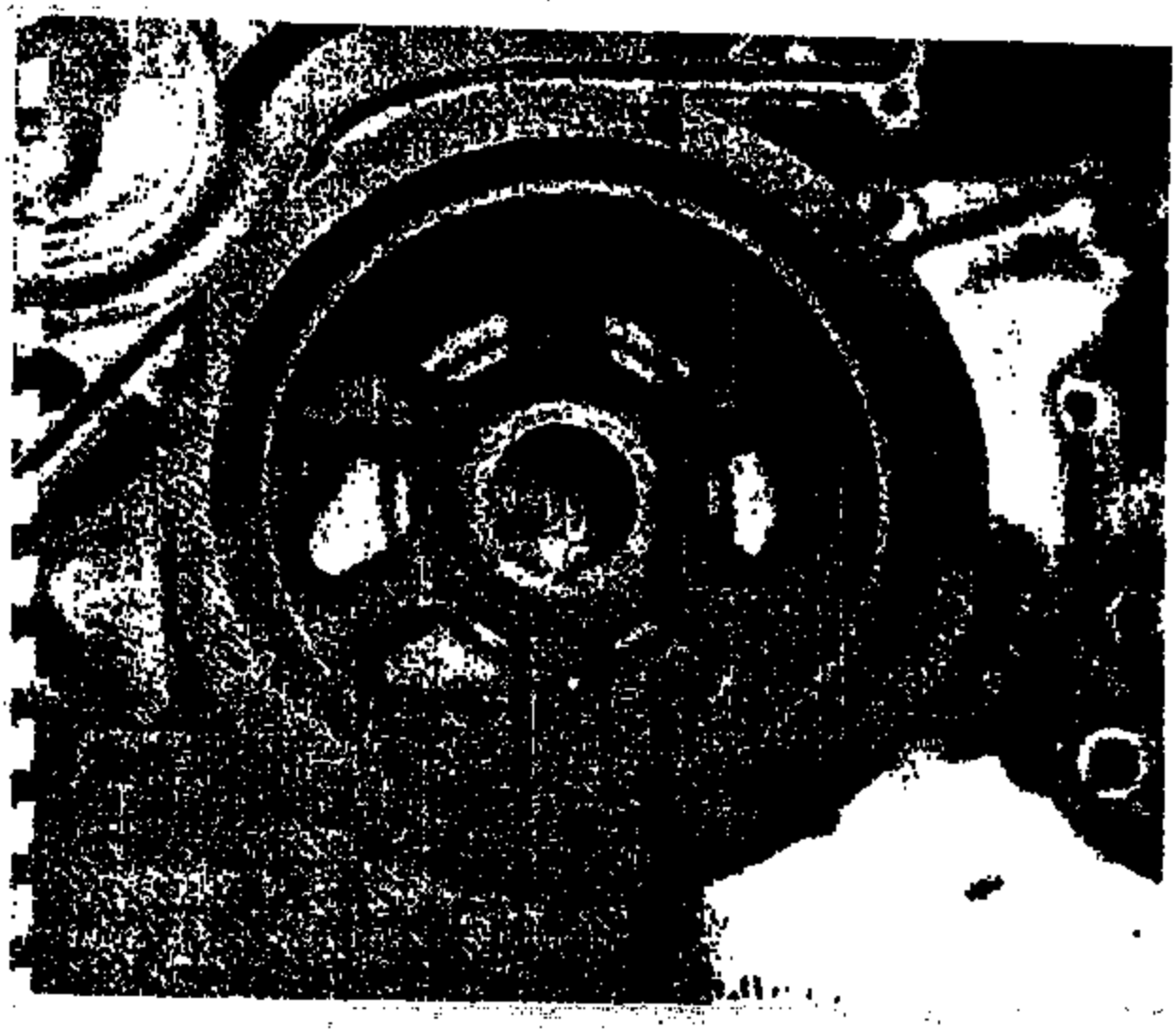

Plaintiff's Exhibit 8

[redacted]

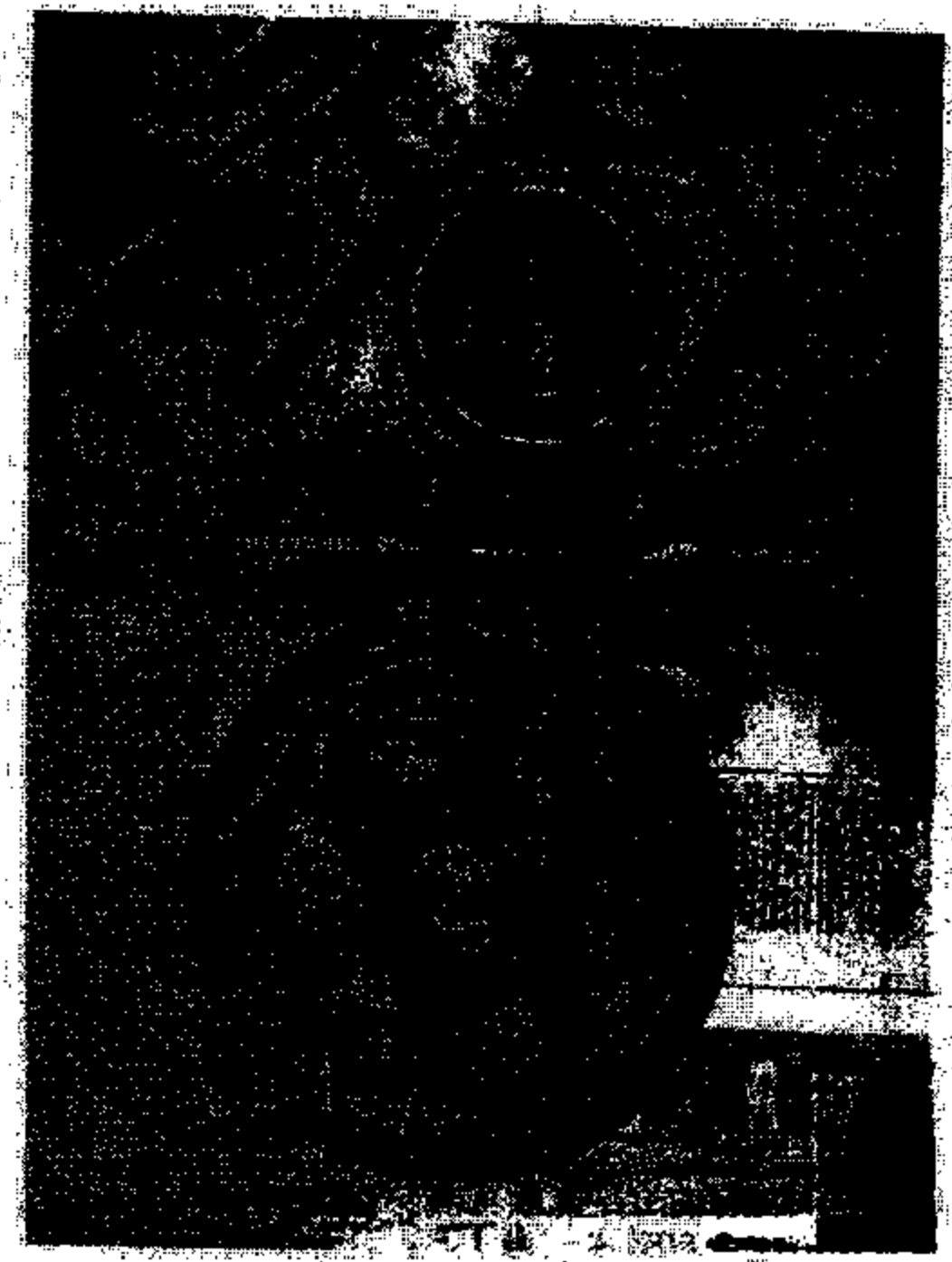

PLAINTIFF'S EXHIBIT 7

HINSHAW & CULBERTSON

345.1101.5025

MOLINE, ILLINOIS
BLOOMINGTON, ILLINOIS
CHAMPAIGN, ILLINOIS
CHICAGO, ILLINOIS
CRYSTAL LAKE, ILLINOIS
JOLIET, ILLINOIS
LISLE, ILLINOIS
PEORIA, ILLINOIS
ROCKFORD, ILLINOIS
SPRINGFIELD, ILLINOIS
WAUKEGAN, ILLINOIS

SUITE 820
FIRST UNION CENTER
100 SOUTH ASHLEY
TAMPA, FLORIDA 33602

813.276.1661

TELEFAX 813.276.1936

SAN FRANCISCO, CALIFORNIA
FT. LAUDERDALE, FLORIDA
JACKSONVILLE, FLORIDA
MIAMI, FLORIDA
MUNCIE, INDIANA
MINNEAPOLIS, MINNESOTA
ST. LOUIS, MISSOURI
APPLETON, WISCONSIN
BROOKFIELD, WISCONSIN
LAKE GENEVA, WISCONSIN
MILWAUKEE, WISCONSIN

January 28, 2000

FILE NO.
787418

Mark H. Kelly, Esq.
Mercedes-Benz of North America, Inc.
P.O. Box 350
Montvale, New Jersey 07645-0350

Re: [redacted] v. Mercedes-Benz of North America, Inc.
Case No. 1999-1126/FTL

Dear Mark:

As a follow-up to my December 23, 1999 letter, please be advised that today I received the Order Dismissing Case and Closing File from the Florida New Motor Vehicle Arbitration Board. Enclosed please find a copy of same. As a reminder, Wayne Shewchuk settled this matter prior to the Lemon Law arbitration hearing.

Now that this matter has been fully resolved, I will close my file. Should you have any questions or comments, please do not hesitate to call.

Very truly yours,

Bruce W. Bennett
For the Firm

2/14 to Atty
Please close file
Thanks
MHK

BWB:dmm
Enclosure

cc: Mr. Wayne Shewchuk (w/enclosure)

STATE OF FLORIDA
OFFICE OF THE ATTORNEY GENERAL
FLORIDA NEW MOTOR VEHICLE ARBITRATION BOARD

Consumer,

vs. CASE NO.: 1999-1126/FTL

MERCEDES-BENZ OF NORTH AMERICA, INC.

Manufacturer.

ORDER DISMISSING CASE AND CLOSING FILE

THIS CASE came before the New Motor Vehicle Arbitration Board upon approval of the Consumer's request for arbitration. The Consumer requests withdrawal of the claim because the parties have entered into a settlement. Accordingly, it is

ORDERED that the Consumer's request for arbitration is considered withdrawn and this case is hereby DISMISSED and the file shall be closed.

DONE and ORDERED this 26th day of January, 2000.

FLORIDA NEW MOTOR VEHICLE ARBITRATION BOARD

Copies furnished to:

Consumer

Manufacturer
Manufacturer's Attorney, Bruce W. Bennett, Esq.

3/5.1101/5025

HINSHAW & CULBERTSON

BELLEVILLE, ILLINOIS
BLOOMINGTON, ILLINOIS
CHAMPAIGN, ILLINOIS
CHICAGO, ILLINOIS
CRYSTAL LAKE, ILLINOIS
JOLIET, ILLINOIS
LISLE, ILLINOIS
PEORIA, ILLINOIS
ROCKFORD, ILLINOIS
SPRINGFIELD, ILLINOIS
WAUKEGAN, ILLINOIS

[illegible]
FIRST UNION CENTER
[illegible] SOUTH ASHLEY
TAMPA, FLORIDA [illegible]

[illegible]

TELEFAX [illegible]

SAN FRANCISCO, CALIFORNIA
FT. LAUDERDALE, FLORIDA
JACKSONVILLE, FLORIDA
MIAMI, FLORIDA
MUNSTER, INDIANA
MINNEAPOLIS, MINNESOTA
ST. LOUIS, MISSOURI
APPLETON, WISCONSIN
BROOKFIELD, WISCONSIN
LAKE GENEVA, WISCONSIN
MILWAUKEE, WISCONSIN

December 23, 1999

FILE NO.
787418

Mark H. Kelly, Esq.
Mercedes-Benz of North America, Inc.
P.O. Box 350
Montvale, New Jersey 07645-0350

Re: [redacted] v. Mercedes-Benz of North America, Inc.
Case No. 1999-1126/FTL

Dear Mark:

With regard to the above-captioned matter, please be advised that I spoke with Wayne Shewchuk today and he advised me that he reached an amicable pre-arbitration settlement with the Consumer. Therefore, the Lemon Law arbitration hearing scheduled for January 27, 2000 will be canceled.

Wayne has completed the settlement and is currently in the process of forwarding to me a letter setting forth the settlement terms. I assume that the settlement documents will be forwarded directly to you by Wayne.

Should you have any questions or comments regarding this matter, please do not hesitate to call me or Wayne.

Very truly yours,

Bruce W. Bennett
For the Firm

BWB:dmm

cc: Mr. Wayne Shewchuk

345.11015025

HINSHAW & CULBERTSON

MELROSE, ILLINOIS
BLOOMINGTON, ILLINOIS
CHAMPAIGN, ILLINOIS
CHICAGO, ILLINOIS
CRYSTAL LAKE, ILLINOIS
JOLIET, ILLINOIS
LISLE, ILLINOIS
PEORIA, ILLINOIS
ROCKFORD, ILLINOIS
SPRINGFIELD, ILLINOIS
WAUKEGAN, ILLINOIS

SUITE 630
FIRST UNION CENTER
100 SOUTH ASHLEY
TAMPA, FLORIDA 33602

813.276.1600

TELEFAX 813.276.1956

SAN FRANCISCO, CALIFORNIA
FT. LAUDERDALE, FLORIDA
JACKSONVILLE, FLORIDA
MIAMI, FLORIDA
MUNSTER, INDIANA
MINNEAPOLIS, MINNESOTA
ST. LOUIS, MISSOURI
APPLETON, WISCONSIN
BROOKFIELD, WISCONSIN
LAKE GENEVA, WISCONSIN
MILWAUKEE, WISCONSIN

LEGAL DEPARTMENT

DEC 1 4 1999

December 8, 1999

FILE NO.
787418

Mark H. Kelly, Esq.
Mercedes-Benz of North America, Inc.
P.O. Box 350
Montvale, New Jersey 07645-0350

Re: [redacted] v. Mercedes-Benz of North America, Inc.
Case No. 1999-1126/FTL

Dear Mark:

With regard to the above-captioned matter, please be advised that the Florida Lemon Law Board has not yet scheduled the arbitration hearing date. Upon my receipt of the Notice of Hearing, I will advise you of same.

Enclosed please find my chronological summary of repairs and pertinent dates. As you will note from same, the subject vehicle has been out of service in excess of the 30 day statutory limit.

Since the Consumer took delivery of the subject vehicle on December 17, 1997, the Florida Lemon Law which was revised in May 1997 (which applies to all motor vehicles acquired on or after October 1, 1997) governs this case. As such, the mileage offset calculation is based upon the mileage at the time of the arbitration hearing rather than the mileage at the time of the third repair attempt/20th day out of service.

Once you have had a chance to review the enclosed summary of repairs and pertinent dates, please contact the undersigned so that we can discuss the future handling of this matter. I look forward to hearing from you at your earliest convenience.

Very truly yours,

Bruce W. Bennett
For the Firm

BWB:dmm
Enclosure

cc: Mr. Wayne Shewchuk (w/enclosure)

Hinshaw & Culbertson
MEMORANDUM

To: File

From: BWB

Re: [redacted] v MBNA
1998 MB 320/K1

DAYS OUT	MILEAGE	DATE	PROBLEM
	4	12/01/97	Pre-delivery inspection
	5	12/09/97-12/11/97	AUTOHAUS Add portable phone Add fender flairs Add tow hitch Add grill guard chrome Add fog lamps Add side step bars
	10	12/17/97	Date of Delivery (lease)
1	665	12/26/97	AUTOHAUS Check engine light on Fuel evaporation system replaced Found and replaced leaking carbon canister purge valve Left front tire has a nail Plugged front left tire
2	2708	01/28/98-01/29/98	AUTOHAUS Car vibrates from 65-75 MPH Rotate balance Right rear tire out of round Oil change Scratches on rear hatch and by driver door Replace cooler line from transmission
	3997	02/18/98	AUTOHAUS Tire went flat - replace one tire

	13907	07/15/98	AUTOHAUS Perform first service
	17186	08/19/98	AUTOHAUS Replace left rear tire cut in side wall of tire
5	20305	10/08/98-10/12/98	AUTOHAUS Car going in low range by itself A/C will blow warm air intermittently when sitting at idle Replace L/S auxiliary fan Right rear brake light inoperable Clock light bulb inoperable Detail car (n/c per IBS coupon)
2	22498	11/12/98-11/13/98	AUTOHAUS Check engine light coming on Replaced evaporation emissions shut off valve Brake pad light on
2	23588	12/02/98-12/03/98	AUTOHAUS Driver's side window is inoperable Power window switch replaced Inner sliding roof seal is pulled out Rear wiper motor is noisy Replace rear wiper motor assembly
2	22660 (?)	12/04/98-12/05/98	AUTOHAUS Car was just here for repairs Engine cranks but will not start all the time Replace fuel pump assembly
3	26918	01/20/99-01/22/99	AUTOHAUS Blower fan inside vent inoperable Checks o/k at this time Check engine light is on all the time Replace fuel tank assembly Transfer case, shift motor

*(97) 3	27713	02/03/99-02/11/99	AUTOHAUS Customer complains car went into low range when driving Replace transfer case motor Replace shift rod bushing Eight days rental *On 02/05/99 @ 9:30 a.m. Sean left message advising car was ready & again @ 12:30 p.m. Customer called back @ 1:45 p.m. and was again advised car was ready. Wayne Shewchuk was advised at this time. Wayne Shewchuk spoke to customer @ 10:00 a.m. on 02/11/99 & advised customer to pick up car.
*(67) 3	30164-30184	04/07/99-04/12/99	AUTOHAUS Customer states transmission makes strange noises Could not verify *Customer notified by Chuck Thompson (service manager) and by Wayne Shewchuk on 04/09/99 that car was ready to be picked up
	35375	08/01/99	LP EVANS Battery died Replace battery
4	35577	08/10/99-08/13/899	LP EVANS Squeaking/whining noise in rear Replace defective differential Perform recall re: cowl seal chips Perform recall re: etc harness
8	36433-36438	09/22/99-09/29/99	LP EVANS No power steering Harmonic balancer came apart Replace timing chain cover

		09//22/99	Motor Vehicle Defect Notification received by MBNA
		09/27/99	Response letter sent by MBNA to Consumer
2	38535-38540	11/11/99-11/12/99	<u>AUTOHAUS</u> Whining noise at front of engine Replaced generator
35			

[redacted]

345-11015025

LEGAL DEPARTMENT

JAN 31 2000

STATE OF FLORIDA
OFFICE OF THE ATTORNEY GENERAL
FLORIDA NEW MOTOR VEHICLE ARBITRATION BOARD

[redacted]

Consumer,

vs. CASE NO.: 1999-1126/FTL

MERCEDES-BENZ OF NORTH AMERICA, INC.

Manufacturer.

_____/

ORDER DISMISSING CASE AND CLOSING FILE

THIS CASE came before the New Motor Vehicle Arbitration Board upon approval of the Consumer's request for arbitration. The Consumer requests withdrawal of the claim because the parties have entered into a settlement. Accordingly, it is

ORDERED that the Consumer's request for arbitration is considered withdrawn and this case is hereby DISMISSED and the file shall be closed.

DONE and ORDERED this 26th day of January, 2000.

FLORIDA NEW MOTOR VEHICLE ARBITRATION BOARD

Copies furnished to:

Consumer

Manufacturer
Manufacturer's Attorney, Bruce W. Bennett, Esq.

W310.1967

CT System

Service of Process Transmittal Form
Plantation, Florida

10/24/2003

Via Federal Express (2nd Day)

TO: Tracey L. Mature V.P. & Gen. Col.
Mercedes-Benz USA, LLC
One Mercedes Drive
PO Box 350
Montvale, NJ 07645-0350

Phone: (201) 573-2225 ac

OCT 27 2003

RE: **PROCESS SERVED IN FLORIDA**

FOR: Mercedes-Benz USA, LLC Domestic State: De

ENCLOSED ARE COPIES OF LEGAL PROCESS RECEIVED BY THE STATUTORY AGENT OF THE ABOVE COMPANY AS FOLLOWS:

1. TITLE OF ACTION: [redacted], et al, Plfs. vs Mercedes-Benz USA, LLC, Dft.
2. DOCUMENT(s) SERVED: Summons, Complaint, Interrogatories, Request for Production, Requests for Admission, Exhibit
3. COURT: Osceola County Circuit Court, FL
Case Number CI-03-CI-2306
4. NATURE OF ACTION: Breach of Written Warranty; failure to cure or repair defects on certain 2002 Mercedes M-Class manufactured by Dft.; seeking damages and revocation of acceptance
5. ON WHOM PROCESS WAS SERVED: CT Corporation System, Plantation, Florida
6. DATE AND HOUR OF SERVICE: By Process server on 10/24/2003 at 02:00
7. APPEARANCE OR ANSWER DUE: Within 20 days
8. ATTORNEY(s): Alex D. Weisberg
(312) 575-9428
120 West Madison Street
10th Floor
Chicago, IL 60602
9. REMARKS: Trial by jury demanded.

SIGNED: CT Corporation System

PER: Anna Soulliar /DM

ADDRESS: 1200 South Pine Island Road
Plantation, FL 33324
SOP WS 0005601614

IN THE CIRCUIT COURT IN AND FOR
OSCEOLA COUNTY, FLORIDA

CASE NO. 03-CA-2305

[redacted]

Plaintiffs,

v.

MERCEDES-BENZ USA, LLC.,

Defendant.

PLEASE SERVE:
Mercedes-Benz USA, LLC.
c/o CT Corporation System
1200 South Pine Island Road
Plantation, Florida 33324

DATE: 10-24-03 TIME: 2:00

ERIC DEAL S.P.S. #336

SUMMONS

THE STATE OF FLORIDA:
To Each Sheriff of the State:

YOU ARE COMMANDED to serve this summons, a copy of the complaint or petition in this action, interrogatories, requests for production and requests for admission on defendant MERCEDES-BENZ USA, LLC.

Each defendant is required to serve written defenses to the complaint or petition on Alex D Weisberg, plaintiff's attorney, whose address is 120 West Madison Street, 10th Floor, Chicago, IL, 60602, within 20 days after service of this summons on that defendant, exclusive of the day of service, and to file the original of the defenses with the clerk of this court either before service on plaintiff's attorney or immediately thereafter. If a defendant fails to do so, a default will be entered against that defendant for the relief demanded in the complaint or petition.

DATED on .....10/10/03.....

If you are a person with a disability who needs any accommodation in order to participate in this proceeding, you are entitled, at no cost to you, to the provision of certain assistance. Please contact Court Administration at Two Courthouse Square, Suite 1100, Kissimmee, Florida 34741. Telephone: (407) 343-2421 within two (2) working days of your receipt of this described notice. If you are hearing or voice impaired, call 1-800-955-8771.

As Clerk of the Court
By
As Deputy Clerk

ALEX D. WEISBERG
KROHN & MOSS, LTD.
120 West Madison Street, 10th Floor
Chicago, Il 60602
(312) 578-9428, x227
FBN: 0566551

IN THE CIRCUIT COURT IN AND FOR
OSCEOLA COUNTY, FLORIDA

CASE NO. 03-CA-3306

[redacted]

Plaintiffs,

v.

MERECEDES-BENZ U.S.A., LLC,

Defendant.

_____/

COMPLAINT AND DISCOVERY REQUESTS

NOW COME the Plaintiffs, [redacted] by and through their attorneys, KROHN & MOSS, LTD., and for their complaint against Defendant, MERCEDES-BENZ U.S.A., L.L.C. allege and affirmatively state as follows:

PARTIES

1 Plaintiffs, [redacted] ("Plaintiffs"), are individuals who were at all times relevant hereto residing in the State of Florida.

2. Defendant, MERCEDES-BENZ U.S.A, L.L.C. ("Manufacturer"), is a foreign corporation authorized to do business in the State of Florida, County of Osceola, and is engaged in the manufacture, sale, and distribution of motor vehicles and related equipment and services. Manufacturer is also in the business of marketing, supplying and selling written warranties to the public at large through a system of authorized dealerships, including MERCEDES-BENZ OF ORLANDO ("Seller"). Manufacturer does business in all counties of the State of Florida

including Osceola County, and maintains offices in or near the County of Osceola, State of Florida.

BACKGROUND

3. On or about June 15, 2002, Plaintiffs purchased from Seller a 2002 Mercedes M-Class ("M-Class"), manufactured by Manufacturer, Vehicle Identification No. 4JGAB54E02A[redacted] for valuable consideration (See copy of Plaintiffs' Retail Installment Contract attached hereto a Exhibit "A").

4. The price of the M-Class, including registration charges, document fees and sales tax, and including other collateral charges, such as bank and finance charges, totaled at least $50,371.60.

5. Plaintiffs aver that as a result of the ineffective repair attempts made by Manufacturer, through its authorized dealership network, the M-Class cannot be utilized for personal, family and household use as intended by Plaintiffs at the time of acquisition.

6. In consideration for the purchase of the M-Class, Manufacturer issued and supplied to Plaintiffs its written warranty, which included four (4) year or fifty thousand (50,000) mile bumper to bumper coverage, as well as other warranties fully outlined in the Manufacturer's New Car Warranty booklet (See Copy of Warranty Booklet, attached hereto as Exhibit "B").

7. On or about June 15, 2002, Plaintiffs took possession of the M-Class and shortly thereafter experienced the various defects listed below that substantially impair the use, value and/or safety of the M-Class.

8. The defects described below violate Manufacturer's warranty issued to Plaintiffs, as well as the implied warranty of merchantability.

9. Plaintiffs delivered the M-Class to Manufacturer, through its authorized dealership network, on numerous occasions.

10. Plaintiffs aver that the M-Class has been subject to repair on at least five (5) occasions for the same defect, and that the defect remains uncorrected.

1 Plaintiffs brought the M-Class to Seller and/or an authorized service dealer of Manufacturer for various defects, including but not limited to the following:

a. Defective engine as evidenced by no crank, vehicle stalling, lack of acceleration, illumination of warning lights;

b. Defective fenders;

c. Defective doors;

d. Defective interior; and

e. Any additional defects as contained on repair orders by Defendant's authorized dealerships.

12. Plaintiffs provided Manufacturer, through its authorized dealership network, sufficient opportunities to repair the M-Class.

13. After a reasonable number of attempts to cure the defects in Plaintiffs' M-Class, Manufacturer was unable and/or has failed to repair the defects, as provided in Manufacturer's warranty.

14. Plaintiffs justifiably lost confidence in the M-Class's safety and reliability, and said defects have substantially impaired the value of the M-Class to Plaintiffs.

15. Said defects could not have reasonably been discovered by Plaintiffs prior to Plaintiffs' acceptance of the M-Class.

16. As a result of these defects, Plaintiffs revoked their acceptance of the M-Class in writing.

17. At the time of revocation, the M-Class was in substantially the same condition as at delivery except for damage caused by its own defects and ordinary wear and tear.

18. Defendant refused Plaintiffs' demand for revocation and has refused to provide Plaintiffs with the remedies to which Plaintiffs are entitled upon revocation.

19. The M-Class remains in a defective and unmerchantable condition, and continues to exhibit the above mentioned defects that substantially impair its use, value and/or safety.

20. Plaintiffs have been and will continue to be financially damaged due to Defendant's intentional, reckless, wanton and negligent failure to comply with the provisions of its express warranty and its failure to provide Plaintiffs with a merchantable M-Class.

COUNT I
BREACH OF WRITTEN WARRANTY
PURSUANT TO THE MAGNUSON-MOSS WARRANTY ACT
MANUFACTURER

21. Plaintiffs re-allege and incorporate by reference as though fully set forth herein, paragraphs 1-20 of this complain

22. Plaintiffs are purchasers of a consumer product who received the M-Class during the duration of a written warranty period applicable to the M-Class and who are entitled by the terms of the written warranty to enforce against Manufacturer the obligations of said warranty.

23. Manufacturer is a person engaged in the business of making a consumer product directly available to Plaintiffs.

24. Seller is an authorized dealership/agent of Manufacturer designated to perform repairs on vehicles under Manufacturer's automobile warranties.

25. The Magnuson-Moss Warranty Act, Chapter 15 U.S.C.A., Section 2301, et. seq. ("Warranty Act") is applicable to Plaintiffs' Complaint in that the M-Class was manufactured,

sold and purchased after July 4, 1975, and costs in excess of ten dollars ($10.00).

26. Plaintiffs' purchase of the M-Class was accompanied by a written factory warranty for any defects in material or workmanship, comprising an undertaking in writing in connection with the purchase of the M-Class to repair or replace defective parts, or take other remedial action free of charge to Plaintiffs with respect to the M-Class in the event that the M-Class failed to meet the specifications set forth in Manufacturer's warranty.

27. Manufacturer's warranty was the basis of the bargain of the contract between the Plaintiffs and Manufacturer for the sale of the M-Class to Plaintiffs.

28. Said purchase of Plaintiffs' M-Class was induced by, and Plaintiffs relied upon, Manufacturer's written warranty.

29. Plaintiffs have met all of their obligations and preconditions as provided in Manufacturer's written warranty.

30. As a direct and proximate result of Manufacturer's failure to comply with its written warranty, Plaintiffs have suffered damages and, in accordance with 15 U.S.C. '2310(d)(1), Plaintiffs are entitled to bring suit for such damages and other legal and equitable relief.

31 Plaintiffs aver that upon successfully prevailing upon the Magnuson-Moss Warranty Act claim herein, all attorneys' fees are recoverable and are demanded against Manufacturer.

WHEREFORE, Plaintiffs pray for judgment against Manufacturer as follows:

a. Return of all monies paid, satisfaction of all liens, diminution in value of the vehicle, and all incidental and consequential damages incurred;
b. All reasonable attorneys' fees, witness fees and all court costs and other

fees incurred; and

e. Such other and further relief that the Court deems just and appropriate.

COUNT II
BREACH OF IMPLIED WARRANTY
PURSUANT TO THE MAGNUSON-MOSS WARRANTY ACT
MANUFACTURER

32. Plaintiffs re-allege and incorporate by reference as though fully set forth herein, paragraphs 1-20 of this complaint.

33. The M-Class purchased by Plaintiffs was subject to an implied warranty of merchantability as defined in 15 U.S.C. '2301(7) running from the Manufacturer to the intended consumer, Plaintiffs herein.

34. Manufacturer is a supplier of consumer goods as a person engaged in the business of making a consumer product directly available to Plaintiffs.

35. Manufacturer is prohibited from disclaiming or modifying any implied warranty when making a written warranty to the consumer or when Manufacturer has entered into a contract in writing within ninety (90) days of a purchase to perform services relating to the maintenance or repair of a motor vehicle.

36. Pursuant to 15 U.S.C. '2308, Plaintiff's M-Class was impliedly warranted to be substantially free of defects in both material and workmanship, and thereby fit for the ordinary purpose for which the M-Class was intended.

37. The M-Class was warranted to pass without objection in the trade under the contract description, and was required to conform to the descriptions of the M-Class contained in the contracts and labels.

38. The above described defects in the M-Class render the M-Class unmerchantable

and thereby not fit for the ordinary and essential purpose for which the M-Class was intended and as represented by Manufacturer.

39. As a result of the breaches of implied warranty by Manufacturer, Plaintiffs are without the reasonable value of the M-Class.

40. As a result of the breaches of implied warranty by Manufacturer, Plaintiffs have suffered and continues to suffer various damages.

WHEREFORE, Plaintiffs pray for judgment against Manufacturer as follows:

a. Return of all monies paid, satisfaction of all liens, diminution in value of the vehicle, and all incidental and consequential damages incurred;
b. All reasonable attorneys' fees, witness fees and all court costs and other fees incurred; and
c. Such other and further relief that the Court deems just and appropriate.

PLAINTIFFS DEMAND A TRIAL BY JURY

ALEX D. WEISBERG
KROHN & MOSS, LTD.
ATTORNEYS FOR PLAINTIFFS
120 West Madison Street, 10th Floor
Chicago, Illinois 60602
(312) 578-9428
(312) 896-5969 fax

By: .....
Alex D. Weisberg, Esq.
FBN: 0566551

EXHIBIT A

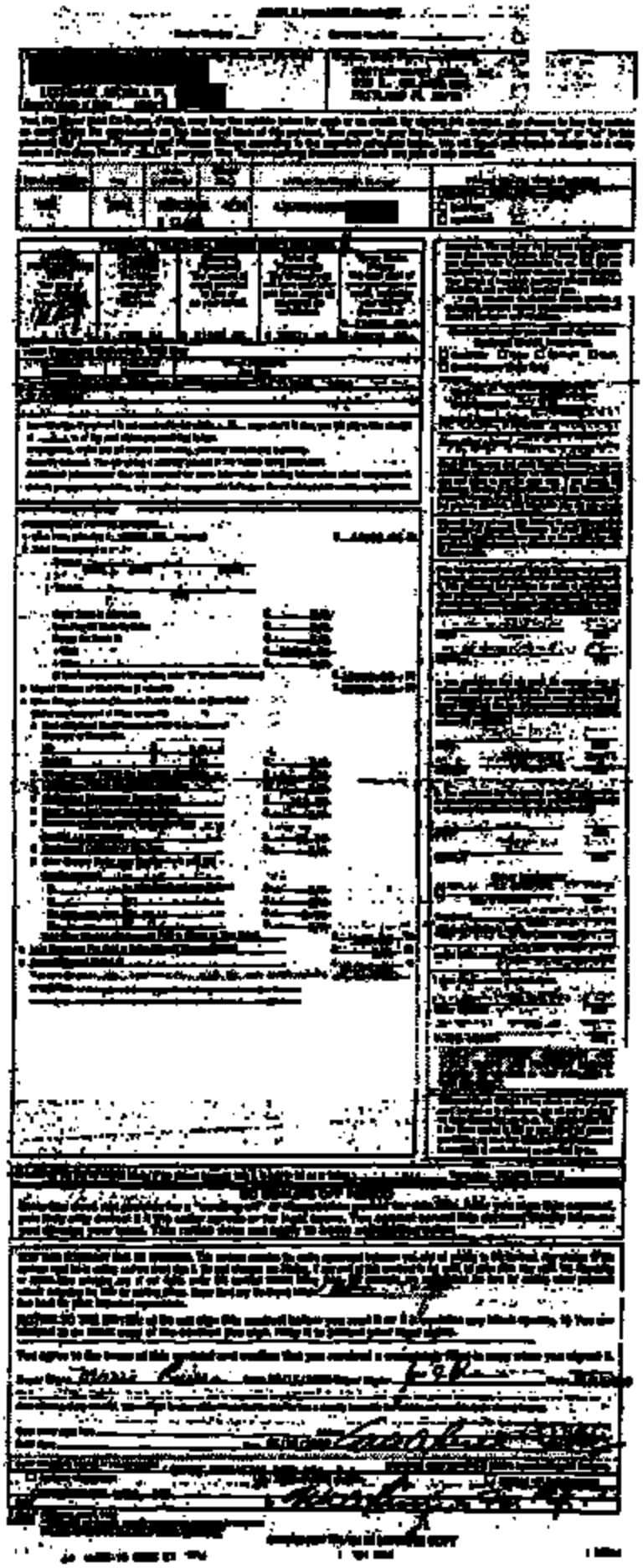

EXHIBIT B

Mercedes-Benz

Service and Warranty Information
2002 - Passenger Cars

QUICK REFERENCE TO WARRANTY COVERAGE

(Complete warranty coverage starts on page 11)

BASIC WARRANTY	[illegible] 4 Years/50,000 Miles
WHEEL ALIGNMENT AND BALANCING	[illegible] 1 Year/12,000 Miles
EMISSION PERFORMANCE/CONTROL (Federal)	[illegible] 2 Years/24,000 Miles
EMISSION PERFORMANCE/CONTROL (Federal)	[illegible] 8 Years/80,000 Miles (Limited Coverage - please refer to text)
EMISSION PERFORMANCE (California, Maine, Massachusetts, Vermont)	[illegible] 3 Years/36,000 Miles
EMISSION CONTROL (California, Maine, Massachusetts, Vermont)	7 Years/70,000 Miles (Limited Coverage - please refer to text)
Years in Service	1 2 3 4 5 6 7 8

Dear Mercedes-Benz Owner:

As an authorized Mercedes-Benz Dealer, we are dedicated to providing you with unparalleled Commitment to Excellence in Sales and Service.

We will always do everything possible to live up to this commitment.

Mercedes-Benz Dealer's Signature and Stamp

MERCEDES-BENZ CENTER INFORMATION

Name: _____

Address: _____

City, State, ZIP Code: _____

Sales Department Hours: _____

Telephone: _____ Fax: _____ E-mail: _____

Service Department Hours: _____

Telephone: _____ Fax: _____ E-mail: _____

Parts Department Hours: _____

Telephone: _____ Fax: _____ E-mail: _____

Additional Customer Amenities/Services: _____

_____

VEHICLE WARRANTY INFORMATION

Model _____

Serial Number _____

VIN _____

Owner _____

Address _____

City/State/ZIP _____

European Delivery ☐ Domestic Delivery ☐

Delivery/Warranty: Mo. _____ Day _____ Yr. _____

Selling Dealer Code _____

LIMITED WARRANTY TERMS: The first in order of 4 Years or 50,000 miles from date of delivery or when put into service. (See details starting on page 1) of this booklet.)

OTHER _____

_____

Owner's Signature

NEW VEHICLE SYSTEMS CHECKOUT INSPECTION/DELIVERY

NEW VEHICLE PRE-DELIVERY INSPECTION PERFORMED

Month _____ Day _____ Year _____

Service Manager's Signature

Delivery and Owner Instructions

Owner instructed in operation of vehicle per Mercedes-Benz New Car Delivery Program ☐

Service and Warranty Information Booklet, Operator Manuals and Service Booklet reviewed with owner ☐

Owner introduced to Service Department ☐

Owner instructed on: Maintenance Department ☐
Roadside Assistance ☐
Tele Aid ☐

Mercedes-Benz Representative's Signature

CONTENTS

TO THE OWNER

The subsequent pages of this Service and Warranty Information booklet describe some service requirements and the warranties you receive as a Mercedes-Benz owner.

Your car is covered under the terms of these "Warranties" and your Mercedes-Benz Center will exchange or repair any defective parts in accordance with the terms of such warranties within stated limits.

Please present this booklet to the Service Advisor at your Mercedes-Benz Center every time you have service or warranty work performed as this speeds service order write-up considerably.

Please keep this booklet together with the Operator's Manual and other documents concerning your car so that future owners will have access to this literature if you should sell the vehicle.

Replacement Parts for Your Mercedes-Benz

Genuine Mercedes-Benz parts, exchange units and factory approved accessories are the recommended replacement parts for your Mercedes-Benz passenger car and are available through your authorized Mercedes-Benz Center.

These parts meet the same exacting quality control standards as the original equipment on your car and comply with all applicable Federal and State safety regulations.

Consult your authorized Mercedes-Benz Center for warranty and other details. Also ask your Center about exchange parts under the Mercedes-Benz Exchange Program. These parts cost less than new parts but carry the same warranty terms.

Mercedes-Benz Maintenance Commitment - MY 2002 Passenger Cars

Every model year 2002 Mercedes-Benz passenger car purchased from an authorized Mercedes-Benz Passenger Car Center is covered for all maintenance services specified in the Mercedes-Benz Service Booklet during the new vehicle warranty period of 48 months or 50,000 miles, whichever occurs first.

Any authorized Mercedes-Benz Center in the United States and Puerto Rico will perform the maintenance services specified in the Mercedes-Benz Service Booklet at the durations called for by the vehicle's Flexible Service System (FSS) at no expense to you. The cost of more frequent services is not covered by the Mercedes-Benz Maintenance Commitment. Any additional services must be performed at the owner's expense.

Exclusions from Maintenance Commitment Coverage:

Oil changes or other services performed outside the maintenance interval calculated by the vehicle's Flexible Service System.

Wear items such as, but not limited to, engine belts, brake discs, brake pads, brake pad wear sensors, clutch discs and clutch pressure plates.

Maintenance or service performed by other than an authorized Mercedes-Benz Center within the United States and Puerto Rico.

Wear and tear of soft trim items, such as, but not limited to, seats, carpets, moldings, headliner, door panels, chrome and wood trim.

Tires, wheel alignment and balance.
Note: Wheel alignment and balancing are covered under the Limited New Vehicle Warranty during the first 12 months or 12,000 miles, whichever comes first.

Tire rotations are performed under the B-service on an if necessary basis, however, MBUSA recommends that you follow your tire manufacturer's schedule for tire rotation, which are specific to the tires installed as original equipment. Tire rotations that are performed in accordance with the tire manufacturer's recommendations are not covered by the maintenance commitment.

Damage due to poor fuel quality, abuse, misuse, neglect, alteration, fire, accident, flood, improper repair or negligence and installation of non-Mercedes-Benz accessories.

Altered vehicle identification number or odometer irregularities or vehicles where the true mileage cannot be determined.

Maintenance or repairs performed after the vehicle is deemed a total loss.

Vehicles used in competitive events.

AS A MERCEDES-BENZ OWNER you deserve service unparalleled in the industry.

To meet your every possible service need, your authorized Mercedes-Benz Center employs a specially factory trained staff using the latest diagnostic and service techniques. Whether it is a small adjustment or major service, your Mercedes-Benz Center will accommodate you quickly and efficiently.

Finally, should you ever experience an emergency repair situation, our 24-Hour Around the Clock Roadside Assistance Program is only a toll free call away. (1-800-FOR-MERCedes)

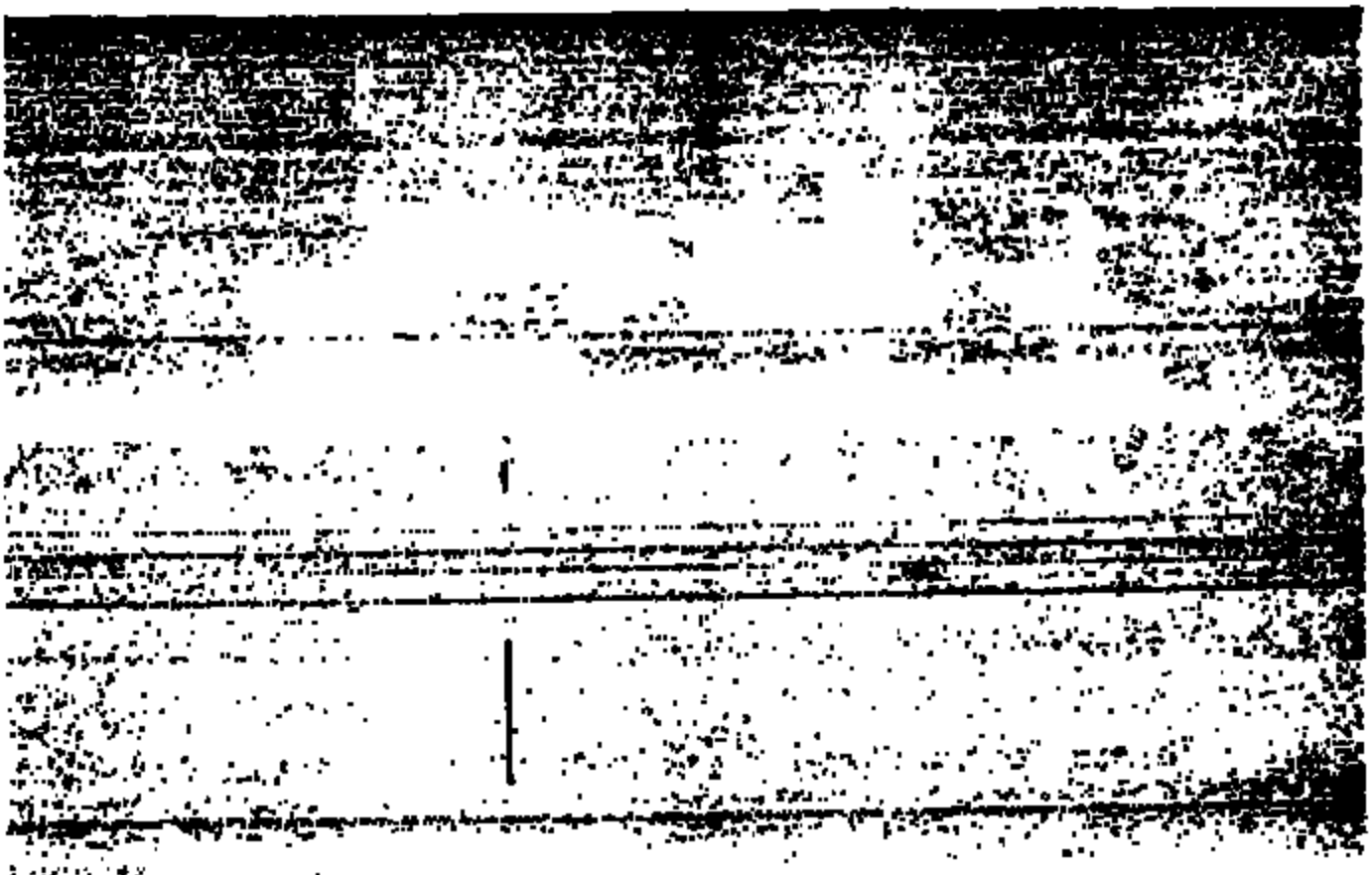

DISCOVERY REQUESTS

IN THE CIRCUIT COURT IN AND FOR
OSCEOLA COUNTY, FLORIDA

CASE NO.

Plaintiffs,

v.

MERECEDES-BENZ U.S.A., LLC,

Defendant.

_____/

INTERROGATORIES TO DEFENDANT

NOW COME the Plaintiffs, [redacted] by and through KROHN & MOSS, LTD. and propounds the following Interrogatories to the Defendant, MERECEDES-BENZ U.S.A., LLC, to be answered in writing and under oath.

INSTRUCTIONS

1. Answer each interrogatory separately and fully in writing and under oath, unless it is objected to, in which event the reasons for such objection must be stated in lieu of an answer.

2. You are under a continuing duty to seasonably supplement your response with respect to any question when new or additional information becomes known. Additionally, you are under a continuing duty to seasonably amend a prior response if you obtain information upon the basis of which you know that the response was incorrect when made, or that the response, though correct when made, is no longer correct or true.

INTERROGATORIES

1. Please state the name and job title of the individual(s) providing the responses and signing the verification to these Interrogatories, including name, business and home address, employment, and job title of said individual(s).

2. Please identify by article number, date of issuance, description, and components

affected, those **TECHNICAL SERVICE BULLETINS, RECALL NOTICES, SPECIAL SERVICE MESSAGES, OR OTHER SERVICE/DIAGNOSTIC BULLETINS**, issued by Defendant for the same make and model vehicle as the subject vehicle that pertain to the alleged defects in the subject vehicle.

3. List the names, addresses, telephone numbers, social security numbers, and job titles of each agent or employee of Defendant who inspected the subject vehicle, performed repairs on the subject vehicle, or was present when these inspections and/or repairs took place. For each individual, please provide a brief factual summary of the nature and extent of said individuals inspection/findings.

4. Did Defendant issue a written warranty with the subject vehicle. If the answer to said interrogatory is "yes" please describe the written warranty or warranties issued with the vehicle.

5. When were you first notified of any alleged defects or complaints concerning the subject vehicle, and by whom. If such notice was made by phone calls from Plaintiffs, or anyone on Plaintiffs' behalf, please list each phone call by date, name of individual from Defendant that engaged in such phone conversation, and the substance of such conversation.

6. State whether Plaintiffs, or anyone on Plaintiffs' behalf, have ever notified Defendant that Plaintiffs no longer wanted the subject vehicle. If so, state when, whether oral or written notice was given, and state the name, address and job title of each person receiving said statement.

7. Please identify the equipment included and specifications of the subject vehicle including but not limited to its exact model name, engine size, transmission type, two wheel drive versus four wheel drive, etc.

8. Please identify the name, address, occupation, substance of expected testimony and summary of the grounds for each and every opinion, for ANY opinion/expert witness as defined by the applicable Rules of Civil Procedure. Please identify only those individuals that you anticipate calling as opinion/expert witnesses at trial and/or arbitration.

9. Please provide a brief chronological resume of each opinion/expert witness identified in the preceding paragraph, including any and all schools attended, certifications, honors achieved, memberships in professional organizations, other current employment(s), names and addresses of employers, and years of employment.

10. Please identify all factual information relied upon by the opinion/expert witness including, but not limited to, drawings, correspondence, memoranda, reports, tests, plans specifications, repair invoices, technical service bulletins, recalls, silent warranties and/or other documents whatsoever.

11. Please identify each and every fact/occurrence witness that Defendant will call at the trial and/or arbitration of this case, stating each individual's full name, address, current

employment, relationship to Defendant, substance of expected testimony and summary of testimony.

12. Did Plaintiffs abuse, neglect, alter, modify, or misuse the subject vehicle. If your answer to said interrogatory is "Yes" please state precisely and in detail each and every factual element upon which Defendant asserts that Plaintiffs abused, neglected, altered, modified, or misused the subject vehicle.

13. Please indicate how many cumulative days Defendant's records indicated that the vehicle was out of service by reason of any defect or condition complained of by Plaintiffs.

14. List all warranty claims submitted by Defendant's authorized dealers to Defendant in which said dealers requested reimbursement for warranty repairs performed on the subject vehicle. For all such claims, please list the dollar amount that Defendant reimbursed each authorized dealer.

15. Does Defendant have a "good will" repair policy. If the answer to said interrogatory is "Yes" please describe the policy and identify any repairs that Defendant paid for under its "good will" program. Please also list the reason said repair was paid under a "good will" determination.

16. Were any repairs performed on the subject vehicle for which Plaintiffs were not charged and the repairs were not covered by the applicable warranties for the subject vehicle. Please list all such repairs.

17. According to Defendant's records, were any repairs performed on the subject vehicle since the date of its manufacture to the date of purchase by Plaintiffs. Please list all such repairs.

18. Please provide the names, addresses and titles of all individuals employed by Defendant who have reviewed Plaintiffs' claims regarding the subject vehicle.

19. Define the word "defect" as used in Defendant's written warranty.

20. Has Defendant failed or refused to reimburse its authorized dealers for any warranty repairs and/or diagnostic procedures on this automobile. If the answer is "yes", state the reason the manufacturer did not make payment.

21. Did any individuals from Defendant's authorized dealers contact Defendant in an effort to seek assistance with the diagnosis or repair of the subject vehicle. If such contact was made, please identify the name, address and position of all individuals involved, the date of said contact and the substance of said contact.

22. Does Defendant provide training programs, manuals, videotapes, or other materials to either its authorized service dealerships or its own employees regarding the various state "Lemon Laws" or other breach of warranty laws. If so, please describe the nature and

extent of such training.

ALEX D. WEISBERG
KROHN & MOSS, LTD.
ATTORNEYS FOR PLAINTIFFS
120 West Madison Street, 10th Floor
Chicago, Illinois 60602
(312) 578-9428
(312) 896-5969 fax

By: _____
Alex D. Weisberg, Esq
FBN: 0566551

IN THE CIRCUIT COURT IN AND FOR
OSCEOLA COUNTY, FLORIDA

CASE NO.

[redacted]

Plaintiffs,

v.

MERECEDES-BENZ U.S.A., LLC,

Defendant.
_____/

REQUEST FOR PRODUCTION OF DOCUMENTS

NOW COME the Plaintiffs [redacted] by and through KROHN & MOSS, LTD., and requests that Defendant, MERECEDES-BENZ U.S.A., LLC, produce, as well as uphold its continuing duty to seasonably supplement these requests as additional information becomes available, all documents of any kind or nature including, without limitation: charts, photographs, phone records and other data, computations from which information can be obtained, and any and all copies thereof within the possession of your agents, employees or authorized dealerships, relating to or connected with, ***every document that you were asked to "identify" or used in supplying the information requested in Plaintiffs' Interrogatories to Defendant.*** In addition, and not by way of limitation, produce the following documents concerning the vehicle that is the subject of this action whether in the possession of the Defendant or its authorized dealership(s):

1. All pre-delivery repair orders pertaining to the vehicle.

2. All post-delivery repair orders pertaining to the vehicle.

3. All technicians' and/or mechanics' notes pertaining to the vehicle.

4. All time stamps and/or time punches relating to the time spent performing repairs to the vehicle.

5. The warranty repair history relating to the vehicle as kept in its ordinary course of business by this Defendant. This includes all computer records evidencing monetary amounts reimbursed to Defendant's authorized dealership(s).

6. All internal reports, memoranda, correspondence and zone office reports pertaining to the subject vehicle.

7. All reports, memoranda, correspondence, zone office reports and/or any other documentation created by Defendant or its authorized dealership(s) due to Plaintiffs' contact with Defendant or its authorized dealership(s) by way of either writing, telephone or in person.

8. All records, invoices, and other documentation relating to the sale of and/or purchase of the vehicle.

9. All copies of all written warranties issued by Defendant and/or its authorized dealership(s) regarding the vehicle. This request is being made to obtain an authentic, unaltered copy.

10. Any and all documents relied upon by Defendant in formulating its answer and affirmative defenses.

11. All documents upon which Defendant relies in believing its arbitration program meets the substantive provisions of the Magnuson-Moss Warranty Act; 16 CFR Part 703; and/or any applicable state law provisions.

12. All technical service bulletins, recall notices or product campaign bulletins whether performed or not, applicable to the vehicle as identified in your answer to Interrogatory number 2.

13. All engineering investigations documents by Defendant through it's "QSF" (Quick Service Fix) process relating to the defects alleged in Plaintiffs' Complaint, of the Plaintiffs' year/model vehicle.

14. All "QSF" documents relating to the defects alleged in Plaintiffs' Complaint for the Plaintiffs' year/model vehicle.

15. All "Talking Papers," "Level Four documents," "advanced service information," "rapid response," special service information, technical training materials, continuing education materials, VSSM service library articles, Manufacture Audit Sampling Reports, Tech II bulletins, Know How Videos, engineering reports, analysis or memorandum, and any and all other documents referencing investigations or inquiries performed which relate to the allegations made herein regarding vehicles of the same year, make and model as Plaintiffs'.

16. Provide each and every opinion/expert witness report whether or not Defendant seeks to introduce it at the arbitration and/or trial of this case.

17. Any and all documents made available to Defendant's opinion/expert witness by Defendant or its attorney in preparing the opinion/expert witness report.

18. Curriculum vitae for any opinion/expert witness who has prepared a report regarding the vehicle whether or not said opinion/expert witness or the report are intended to be introduced at arbitration and/or trial of this case.

19. Curriculum vitae of any opinion/expert witness whose testimony Defendant intends to introduce at trial or arbitration.

20. Any and all documents prepared and/or generated by the opinion/expert witness including but not limited to: notes, memoranda and correspondence.

21. Any and all documents, papers, correspondence, memos, repair orders, work orders, computer print-outs, vehicle inquiry reports, documents, or receipts evidencing the performance of any repair work, whether covered under Defendant's warranty or not, done to the vehicle.

22. All sales brochures, sales manuals, literature, pictures, or any other promotional literature produced for the vehicle which is the subject matter of this litigation.

23. Any franchise contract(s) between Defendant and its authorized dealership(s) that performed repairs to the vehicle.

24. Every document that constitutes an extended service contract given by Defendant, its authorized dealership(s) or some third party to the Plaintiffs covering the vehicle.

25. All written correspondence forwarded by either the Plaintiffs, Plaintiffs' attorney or anyone else acting on Plaintiffs' behalf, informing Defendant or its authorized dealership(s) that Plaintiffs no longer wishes to retain possession of the vehicle.

26. Provide all documentation supporting Defendant's and its authorized dealership(s) policies to perform "goodwill" repairs (or any repairs performed that were free of charge to Plaintiffs but not covered under Defendant's written warranty) to the vehicle.

27. Provide all documentation evidencing the performance of "goodwill" repairs (or any repairs performed that were free of charge to Plaintiffs but not covered under Defendant's written warranty) to the vehicle whether authorized by Defendant or its authorized dealership(s).

28. Provide any lists authored by Defendant that decipher any diagnostic codes or repair codes that Defendant instructs its authorized dealership(s) to document on the repair orders.

29. Provide copies of any training manuals, videotapes or other materials which Defendant provides to its authorized service dealerships regarding the "Lemon Law" or other breach of warranty laws.

ALEX D. WEISBERG
KROHN & MOSS, LTD.
ATTORNEYS FOR PLAINTIFFS
120 West Madison Street, 10th Floor
Chicago, Illinois 60602
(312) 578-9428
(312) 896-5969 fax

By: _____
Alex D. Weisberg, Esq.
FBN: 0566551

IN THE CIRCUIT COURT IN AND FOR
OSCEOLA COUNTY, FLORIDA

CASE NO.

Plaintiffs,

v.

MERECEDES-BENZ U.S.A., LLC,

Defendant,
_____/

REQUESTS FOR ADMISSION

NOW COME the Plaintiffs, [redacted] by and through KROHN & MOSS, LTD., and requests that the Defendant, MERECEDES-BENZ U.S.A., LLC, make the following admissions for the purpose of this action only:

1 Defendant provided a written warranty for the subject vehicle.

2. Plaintiffs' vehicle was brought to Defendant and/or an authorized service dealer of Defendant for repairs at least once within the time provided for under any of Defendant's warranties.

3. Defendant received written notification that Plaintiffs no longer wanted to retain ownership of the subject vehicle.

4. The Defendant and/or its authorized service dealers have been unable to correct all of the defects in the subject vehicle which were complained of by Plaintiffs within any applicable warranty period.

5. Plaintiffs' vehicle has not been repaired after a reasonable number of attempts.

6. The defects alleged in Plaintiffs' Complaint remain uncorrected.

7. Defendant has not offered to repurchase or replace Plaintiffs' vehicle.

8. Plaintiffs have not abused the subject vehicle.

9. Plaintiffs have not neglected the subject vehicle.

10. Plaintiffs have not modified the subject vehicle.

11. Plaintiffs have not altered the subject vehicle.

12. All repairs performed on the subject vehicle were covered under Defendant's applicable warranty(ies).

13. The subject vehicle was subject to repair three (3) or more times for substantially the same nonconformity(ies) during the first twenty-four (24) months of ownership thereof, and the nonconformity(ies) for which it was subject to said repairs continue to exist.

14. The subject vehicle has been out of service in excess of thirty (30) calendar days during the Plaintiffs' first twenty-four (24) months of ownership thereof, by reason of the defects alleged in Plaintiffs' Complaint.

15. The subject vehicle was subject to repair four (4) or more times for substantially the same nonconformity(ies) during the first twenty-four (24) months of ownership thereof, and the nonconformity(ies) for which it was subject to said repairs continue to exist.

16. Defendant has a process by which engineers investigate via a "QSF" (Quick Service Fix) process.

17. Defendant has a process by which engineers offer Special Service Messages" on OASIS of "QSF" (Quick Service Fix) process, when they become available.

18. That the "QSF" process is designed to provide a Quick Service Fix within 90 days as the target time window.

19. Defendant continues to manufacture and deliver vehicles to it's authorized dealers while engineering investigates for "QSF" problems.

20. The QSF process repairs can be adopted into Technical Service Bulletins at a later date by Defendant.

21. The QSF process repairs may be adopted into print in whole or part into Defendant's shop manuals.

ALEX D. WEISBERG
KROHN & MOSS, LTD.
ATTORNEYS FOR PLAINTIFFS
120 West Madison Street, 10th Floor
Chicago, Illinois 60602
(312) 578-9428
(312) 896-5969 fax

By: _____
Alex D. Weisberg, Esq.
FBN: 0566551

Matter Overview

[redacted]

Long Name Name: *Donald Weaver and Alan Feinfeld, individually and on behalf of all others similarly situated v. Mercedes-Benz USA, LLC* [redacted]	Matter Number: PC[illegible].1997 World File: WDBJF[illegible] [redacted]
Matter Type: Product Claims Legal Area: Litigation Matters Law Area: TREAD:	Rec'd Date: 12/[illegible] Serve Date: 12/[illegible] Close Date: Accident Date:
Dispute: Yes Prior Mat: No Subpoena?: Yes	

Description:

Plaintiffs, [redacted] Alan Feinfeld and Summer Brett, individually and on behalf of all others similarly situated, demand judgment against Defendant, Mercedes-Benz USA, LLC, for compensatory damages, plus pre- and post-judgment interest, costs, punitive damages, and any other such further relief to which they and the class are entitled, injunctive and declaratory relief regarding Mercedes-Benz to cease and desist from its current business practice of concealing the nature and extent of the inherent defect in the Subject Vehicle and compelling Mercedes-Benz to recall and repair the Subject Vehicle at its sole expense for alleged breach of contract, breach of warranty and violations of the Magnuson-Moss Warranty Act, the State Consumer Protection Statutes including Deceptive and Unfair Trade Practices Act with respect to the class action consisting of all persons since 1998 who purchased or leased Mercedes-Benz E-Class, CLK, M-Class and S-Class automobiles ("Subject Vehicles") in the State of Florida and throughout the United States. It is alleged that the Subject Vehicle at the time of their sale and/or lease were defective in their design and/or manufacture; specifically, there are defects in the Subject Part, which causes the part and associated parts to suddenly, catastrophically and prematurely fail when used in its usual and intended matter which can cause and has caused substantial damage to the Subject Vehicles. It is further alleged that Mercedes-Benz has manufactured, supplied, promoted, sold and leased vehicles when it knew the subject part alleged to be defective in the harmonic balancer/crankshaft pulley or should have known that its vehicles equipped with the Subject Part would experience a variety of mechanical failures.

Matter handled through DOAG National Coordinating Counsel.

Players

Name	Type	Role	Start Date	End Date
In the Circuit Court of the 11th	Other	Court	1/31/2004	
Cost Center 303 - Legal	Business Unit	Cost Center	12/29/2003	
Circuit Court, Miami-Dade	Other	Court	1/31/2004	
Anolik, Bondkowsky	Other	Plaintiff firm	12/29/2003	
Anolik, Esq., Francis A.	Other	Plaintiff Attorney	12/29/2003	
Barton, Frank P	Assigned Staff	Primary Legal Contact	12/29/2003	
Blackwell, Esq., Donald A.	Other	Plaintiff Attorney	12/29/2003	
Bryan Cave LLP	Billing People and Entities	Outside Counsel Firm	12/29/2003	
Feinfeld, Alan	Other	Plaintiff	12/29/2003	
Herzog, Esq., Peter	Billing People and Entities	Outside Counsel Attorney	12/29/2003	
Mercedes-Benz USA, LLC	Other	Defendant	12/29/2003	
Weaver, Donald	Other	Plaintiff	12/29/2003	

Matter Overview

[redacted]

Plaintiff

Court/Forum:	In the Circuit Court of the 11th Judicial Circuit in and for Miami-Dade County, Florida		
Case/Docket No:	93-287-30-CA-31	SOL Begin:	
Our Role:	Defendant	SOL Expire:	

PC390-1687

CIVIL COVERSHEET

The civil cover sheet and the information contained here does not replace the filing and service of pleadings or other papers as required by law. This form is required by the Clerk of Court for the purpose of reporting judicial workload data pursuant to Florida Statute 25.075 (See instructions).

I. CASE STYLE

IN THE CIRCUIT COURT OF THE 11TH JUDICIAL CIRCUIT, IN AND FOR MIAMI-DADE COUNTY, FLORIDA

GENERAL JURISDICTION DIVISION

CASE No: 03-29731 (A31

[redacted] individually and on behalf of all others similarly situated,

Plaintiffs,

v.

MERCEDES-BENZ USA, LLC, a foreign corporation,

Defendant.

ORIGINAL FILED
DEC 22 2003
HARVEY RUVIN
CLERK

II. TYPE OF CASE

Place an "x" in one box only. If the case fits more than one type of case, select the most definitive.

DOMESTIC RELATIONS

- Simplified Dissolution
- Dissolution
- Support-IV-D
- URESA-IV-D
- URESA-Non IV-D
- Domestic Violence
- Other domestic relations

TORTS

- Professional Malpractice
- Product Liability
- Auto Negligence
- Other Negligence (Admiralty)

OTHER CIVIL

- X Contract
- Condemnation
- Real Property/Mortgage Foreclosure
- Eminent Domain

III. IS A JURY TRIAL DEMANDED IN COMPLAINT? X Yes ___ No

DATE: 12/22/03

Signature of Attorney for Party Initiating Action:

ANANIA, BANDKLAYDER & BLACKWELL
Attorneys for Plaintiffs
International Place - Suite 3100
100 S.E. Second Street
Miami, Florida 33131-2144
(305) 373-4900

By: _____
Francis A. Anania
Fla. Bar No. 160334
Donald A. Blackwell
Fla. Bar No. 370487

IN THE CIRCUIT COURT OF THE 11TH JUDICIAL CIRCUIT, IN AND FOR MIAMI-DADE COUNTY, FLORIDA

GENERAL JURISDICTION DIVISION

CASE NO: 03-29050 CA 31

[redacted] individually and on behalf of all others similarly situated,

Plaintiffs,

v.

MERCEDES-BENZ USA, LLC, a foreign corporation,

Defendant.

SUMMONS

THE STATE OF FLORIDA

To Each Sheriff of Said State:

YOU ARE HEREBY COMMANDED to serve this summons, a copy of the Complaint or petition, and a copy of Plaintiffs' First Request for Production in this action on Defendant:

MERCEDES-BENZ USA, LLC, a foreign corporation
Registered Agent:
C T CORPORATION SYSTEM
1200 South Pine Island Road
Plantation, Florida 33324

Each defendant is required to serve written defenses to the complaint or petition on Plaintiff's attorney, to wit:

whose address is: FRANCIS A. ANANIA
ANANIA, BANDKLAYDER, BLACKWELL, BAUMGARTEN & TORRICELLA
Bank of America Tower, Suite 4300
100 S.E. Second Street
Miami, Florida 33131
(305) 373-4900

within 20 days after service of this summons on that defendant, exclusive of the day of service, and to file the original of the defenses with the Clerk of this court either before service on plaintiff's attorney or immediately thereafter. If a defendant fails to do so, a default will be entered against that defendant for the relief demanded in the complaint or petition.

DATED ON DEC 2 2 2004, 2003

HARVEY RUVIN

as Clerk of Said Court

HATTIE STREETER

by:

as Deputy Clerk

(Court Seal)

ANANIA, BANDKLAYDER, BLACKWELL, BAUMGARTEN, TORRICELLA & STEIN
BANK OF AMERICA TOWER, SUITE 4800, 100 S.E. SECOND STREET, MIAMI, FLORIDA 33131-2143 • TELEPHONE (305) 373-4800 • FACSIMILE (305) 373-4141

IN THE CIRCUIT COURT OF THE 11TH JUDICIAL CIRCUIT, IN AND FOR MIAMI-DADE COUNTY, FLORIDA

GENERAL JURISDICTION DIVISION CA 31

CASE NO: 03-29730

[redacted] individually and on behalf of all others similarly situated,

Plaintiffs,

v.

MERCEDES-BENZ USA, LLC, a foreign corporation,

Defendant.

CLASS ACTION COMPLAINT

The Plaintiffs, [redacted] (sometimes collectively referred to as "Plaintiffs"), individually and on behalf of all others similarly situated, hereby sue the Defendant, MERCEDES-BENZ USA, LLC, a foreign corporation, and alleges as follows:

JURISDICTION AND PARTIES

1. This is an action for damages in excess of the minimum jurisdictional requirements of this Court, exclusive of attorney's fees, interest and costs.

2. The Plaintiff, [redacted] is and, at all times material to this Complaint, was a resident of Hillsborough County, Sun City Center, Florida.

3. The Plaintiff, [redacted] is and, at all times material to this Complaint, was a resident of Hillsborough County, Tampa, Florida.

4. The Plaintiff, [redacted] is and, at all times material to this Complaint, was a resident of Hillsborough County, Lutz, Florida.

5. The Defendant, MERCEDES-BENZ USA, LLC ("MERCEDES BENZ"), is and, at all times material to this action, was a Delaware corporation authorized to do and doing business in Miami, Dade County, Florida.

6. At all times material to this action, MERCEDES BENZ designed, manufactured, marketed and sold and/or leased luxury automobiles to consumers in the State of Florida and throughout the United States, including, but not limited to, the Plaintiffs.

7. Specifically, in October 2000, the Plaintiff [redacted] purchased a 2000 MERCEDES BENZ E320 automobile, VIN # WDBJF65G6Y[redacted] in Tampa, Florida, for his personal use.

8. Similarly, in February, 2001, the Plaintiff [redacted] purchased a 1999 MERCEDES BENZ ML430 automobile, VIN# 4JGAB72EXX[redacted] in Tampa, Florida, for his personal use.

9. In addition, in 2002, the Plaintiff, [redacted], purchased a 1998 MERCEDES BENZ ML320 automobile, VIN # 4JGAB54E9WA[redacted] in Tampa, Florida, for his personal use.

10. Upon information and belief, since 1996, hundreds of thousands of other consumers in the State of Florida and throughout the United States have purchased and/or leased MERCEDES BENZ E-Class, CLK Class, M-Class and S-Class automobiles ("Subject Vehicles").

11. Prior to 2003, MERCEDES BENZ incorporated in the Subject Vehicles a defectively designed and manufactured component part ("Subject Part").

12. MERCEDES BENZ is subject to the jurisdiction of this Court, pursuant to Florida's Long Arm Statute, Section 48.193, Florida Statutes, by reason of one or all of the following:

a. Operating, conducting, engaging in, or carrying on a business or business venture in this state or having an office or agency within this state;

b. Committing a tortious act within this state;

c. Causing injury to persons or property within this state arising out of an act or omission by the Defendant outside this state, and at or about the time of the injury, either:

1. The Defendant engaged in solicitation or service activities within this state; or

2. Products, materials, or things processed, serviced, or manufactured by the Defendant anywhere were used or consumed within this state in the ordinary course of commerce, trade or use; and

d. Breaching a contract in this state by failing to perform acts required by the contract to be performed in this state.

13. Moreover, MERCEDES BENZ is engaged in substantial and not isolated activity within this state and such activity is wholly interstate, intrastate or otherwise.

14. MERCEDES BENZ is further subject to the jurisdiction of this Court pursuant to Florida's Long Arm Statute, Section 48.193, Florida Statutes, by reason of the fact that it committed a tortious act within this state against the Plaintiffs.

GENERAL ALLEGATIONS

15. The Subject Vehicles are and, at the time of their sale and/or lease, were defective in their design and/or manufacture.

16. Specifically, there are defects in the Subject Part, which cause the part and associated parts to suddenly, catastrophically, and prematurely fail when used in its usual and intended manner.

17. The sudden, catastrophic, and premature failure of the Subject Part also can cause and has caused substantial damage to the Subject Vehicles.

18. The foregoing defects diminish the value of the Subject Vehicles, result in costly repairs, and may result in injury to MERCEDES BENZ customers and their passengers.

19. MERCEDES BENZ is and, since at least 1996, has been aware of the defects in the Subject Part. However, upon information and belief, MERCEDES BENZ made a conscious decision not to notify owners or lessees of the Subject Vehicles of the problem, let alone to recall the Subject Vehicles.

20. Instead, in an effort to preserve the marketability of its products, MERCEDES BENZ sometimes treats the defects in the Subject Part as a warranty item, but only for those customers who experience and seek to remedy the problem during the warranty period.

21. In other instances (*i.e.*, when an affected vehicle is out of warranty), MERCEDES BENZ and its dealers replace the Subject Part and repair any associated engine damage at the owner's expense (at least with respect to all or a portion of the labor charge).

22. In still other instances, MERCEDES BENZ has, upon information and belief, simply replaced the Subject Part during unrelated service or repair visits without any notice to its customers.

23. Indeed, upon information and belief, MERCEDES BENZ has misrepresented and continues to misrepresent the existence and magnitude of the defective condition of the Subject Part to consumers by stating that it is an isolated, rather than a product-wide, defect.

24. Finally, MERCEDES BENZ has failed to notify automotive repair facilities other than its authorized dealers of the nature and existence of the alleged defect and/or the appropriate repair of the problem or reimburse its customers for the substantial cost of such repairs.

25. Plaintiffs have retained the undersigned counsel to prosecute this action and have agreed to pay them a reasonable fee.

26. All conditions precedent to the filing of this action have been performed, have occurred, or have been waived.

CLASS ACTION ALLEGATIONS

27. Plaintiffs bring this action on behalf of themselves and all other similarly situated consumers of the Subject Vehicles as a class action, pursuant to Fla. R. Civ. P. 1.220(b)(2) or (b)(3).

28. The class consists of:

> All persons and entities in the United States who purchased or leased MERCEDES BENZ E-Class, CLK Class, M-Class and S-Class vehicles, containing the Subject Part.

29. Plaintiffs believe there are tens of thousands of members of the above-described class. However, the exact number and identities of those class members presently is unknown to Plaintiffs, but is or may be known to MERCEDES BENZ. In any event, the class is so numerous that joinder of all members is impracticable.

30. The following issues of law and fact are common to Plaintiffs' claims and the claims of the prospective class members:

(a) Whether the Subject Part is defective in design or manufacture.

(b) Whether MERCEDES BENZ knew or should have known of the defect(s) [illegible] sold the Subject Vehicles to the members of the class.

(c) Whether, upon learning of the defect(s), MERCEDES BENZ was obligat[illegible] and did take affirmative steps to notify and/or warn affected customers.

(d) Whether, upon learning of the defect(s), MERCEDES BENZ was obligated to remedy the defective condition.

(e) Whether MERCEDES BENZ is or should be required, at its own expense, to replace the Subject Part and repair any causally related engine damage; and

(f) Whether MERCEDES BENZ is or should be required to reimburse purchasers of the Subject Vehicles for the loss in value attributable to the design defect.

32. Moreover, Plaintiffs reasonably anticipate that MERCEDES BENZ's defenses, if any, to their claims and the claims of other class members will be the same.

33. Plaintiffs, as class representatives, will fairly and adequately protect the interests of the class, because the interests of Plaintiffs are coincident with, and are not antagonistic to, the interests of the other members of the class.

34. Prosecution of separate actions by individual members of the class would create a risk of inconsistent or varying adjudications with respect to individual class members which would establish incompatible standards of conduct for MERCEDES BENZ.

35. Prosecution of separate actions by individual members of the class would create a risk of adjudications with respect to individual class members, which would, as a practical matter, be

dispositive of the interest of the other members not parties to the adjudications or substantially impair or impede their ability to protect their interests.

36. MERCEDES BENZ has established a business practice with respect to addressing the defective condition of the Subject Part and/or has acted or refused to act on grounds generally applicable to each member of the class, thereby making corresponding relief appropriate with respect to the class as a whole.

37. The questions of law or fact common to the members of the classes predominate over any questions affecting any individual member, and a class action is superior to other available methods for the fair and efficient adjudication of the controversy between Plaintiffs and MERCEDES BENZ.

38. The class is readily definable and, in part, is one for which records exist.

39. Proof of damage is a common issue and can be established uniformly for the class as a whole.

40. Through a uniform and common course of conduct, MERCEDES BENZ has manufactured, supplied, promoted, sold and leased vehicles when it knew or should have known that its vehicles equipped with the Subject Part would experience a variety of mechanical failures.

COUNT I: NEGLIGENCE (ALL PLAINTIFFS)

41. Plaintiffs reallege and incorporate by reference the allegations in Paragraph Nos. 1 through 40, as if fully set forth herein.

42. MERCEDES BENZ designed, manufactured, tested, inspected, distributed and sold the Subject Vehicles and the Subject Part for their usual and intended usage.

43. MERCEDES BENZ breached the duty of reasonable care that it owed to the Plaintiffs and other members of the class with respect to the Subject Vehicles, by, among other things:

(a) negligently designing and/or manufacturing the Subject Vehicles;

(b) negligently testing or failing to test the Subject Vehicles for defects;

(c) negligently inspecting or failing to inspect the Subject Vehicles for defects;

(d) negligently warning or failing to warn consumers of known defects in the Subject Vehicles; and

(e) such other negligent acts and omissions as discovery may reveal.

44. As a direct and proximate result of MERCEDES BENZ's negligence, Plaintiffs and other members of the class have suffered and will continue to suffer damages, including, but not limited to, loss of value, loss of use, physical damage to the Subject Vehicles, and other injuries and damages described herein.

WHEREFORE, the Plaintiffs, [redacted] and [redacted], individually and on behalf of all others similarly situated, demand judgment against the Defendant, MERCEDES-BENZ USA, LLC, for compensatory damages, plus pre- and post-judgment interest, costs and any and all such further relief to which they and the class are entitled.

COUNT II: BREACH OF EXPRESS WARRANTY (ALL PLAINTIFFS)

45. Plaintiffs reallege and incorporate by reference the allegations in Paragraph Nos. 1 through 40, as if fully set forth herein.

46. MERCEDES BENZ designed, manufactured, tested, inspected, distributed and sold the Subject Vehicles and the Subject Part for their usual and intended usage.

47. MERCEDES BENZ expressly and affirmatively represented to the Plaintiffs and every other class member that the Subject Vehicles were state of the art vehicles.

48. MERCEDES BENZ further represented to the Plaintiffs and every other class member that the Subject Vehicles were free of defects in materials and workmanship.

49. MERCEDES BENZ breached such and every one of those warranties with respect to the Subject Vehicles, in that, among other things:

(a) the Subject Vehicles are defective in their design and/or manufacture;

(b) the Subject Part is defective in its design and manufacture;

(c) the Subject Part fails suddenly, prematurely and catastrophically; and

(d) such other breaches as discovery may reveal.

50. As a direct and proximate result of MERCEDES BENZ's breach of warranty, Plaintiffs and other members of the class have suffered and will continue to suffer damages, including, but not limited to, loss of value, loss of use, physical damage to the Subject Vehicles, and other injuries and damages described herein.

WHEREFORE, the Plaintiffs, [redacted] individually and on behalf of all others similarly situated, demand judgment against the Defendant, MERCEDES-BENZ USA, LLC, for compensatory damages, plus pre- and post-judgment interest, costs, and any and all such further relief to which they and the class are entitled.

COUNT III: BREACH OF IMPLIED WARRANTY OF MERCHANTABILITY (ALL PLAINTIFFS)

51. The Plaintiffs reallege and incorporate by reference the allegations in Paragraph Nos. 1 through 40, as if fully set forth herein.

52. MERCEDES BENZ designed, manufactured, tested, inspected, distributed and sold the Subject Vehicles for their normal and intended usage.

53. MERCEDES BENZ impliedly warranted to the Plaintiffs and every other class member that the Subject Vehicles were of good and merchantable quality and fit for their intended purpose.

54. MERCEDES BENZ breached that implied warranty of merchantability in one or all of the following material respects:

(a) the Subject Vehicles are defective in their design and/or manufacture;

(b) the Subject Part is defective in its design and manufacture;

(c) the Subject Part fails suddenly, prematurely and catastrophically; and

(d) such other breaches as discovery may reveal.

55. As a direct and proximate result of MERCEDES BENZ's breach of warranty, Plaintiffs and other members of the class have suffered and will continue to suffer damages, including, but not limited to, loss of value, loss of use, physical damage to the Subject Vehicles, and other injuries and damages described herein.

WHEREFORE, the Plaintiffs, [redacted] individually and on behalf of all others similarly situated, demand judgment against the

Defendant, MERCEDES-BENZ USA, LLC, for compensatory damages, plus pre- and post-judgment interest, costs, and any and all such further relief to which they and the class are entitled.

COUNT IV: VIOLATION OF STATE CONSUMER PROTECTION STATUTES, INCLUDING DECEPTIVE AND UNFAIR TRADE PRACTICES ACTS

56. Plaintiffs reallege and incorporate by reference the allegations in Paragraphs 1 through 40, as if full set forth herein.

57. MERCEDES BENZ's conduct as alleged herein constitutes unconscionable, deceptive, or unfair acts or practices in the conduct of trade or commerce in violation of any and all state consumer protection and/or deceptive and unfair trade practice acts.

58. Specifically, MERCEDES BENZ failed to adequately disclose to or, alternatively, fraudulently and actively concealed from purchasers and/or lessees of the Subject Vehicles material information relating to the defective and dangerous condition of the Subject Part.

59. The deceptive and unfair business practices of MERCEDES BENZ, as more fully described above, were intended to induce and did induce Plaintiffs and other members of the Class to purchase and/or lease or, alternatively, to pay for repairs to the Subject Vehicles.

60. As a direct and proximate result of MERCEDES BENZ's unconscionable, deceptive, or unfair acts or practices, Plaintiffs and other members of the class have suffered and will continue to suffer damages, including, but not limited, the cost of repairs and the loss of market value.

61. In addition, as a direct and proximate result of MERCEDES BENZ's unconscionable, deceptive, or unfair acts or practices, Plaintiffs have been required to retained the undersigned counsel to enforce their statutory rights and they have agreed to pay them a reasonable fee.

62. Plaintiffs are entitled to an award of reasonably attorney's fees and costs under the express provisions of all state consumer protection and/or deceptive and unfair trade practice acts, including Sections 501.2105 and 501.211, Florida Statutes.

WHEREFORE, the Plaintiff[redacted] individually and on behalf of all others similarly situated, demand judgment against the Defendant, MERCEDES-BENZ USA, LLC, for compensatory damages, pre- and post-judgment interest, costs, attorney's fees, and any and all such further relief to which they and the class are entitled. Plaintiffs further demand injunctive and declaratory relief requiring MERCEDES BENZ to cease and desist from its current business practice of concealing the nature and extent of the inherent defect in the Subject Vehicles and compelling MERCEDES BENZ to recall and repair the Subject Vehicles at its sole expense.

COUNT V: UNJUST ENRICHMENT

63. Plaintiffs reallege and incorporate by reference the allegations in Paragraph Nos. 1 through 40, as if full set forth herein.

64. MERCEDES BENZ and its dealers intended to and, in fact, did benefit and profit from the course of unconscionable, deceptive, and/or unfair conduct more fully described herein, in the form of the sale, lease and/or repair of the Subject Vehicles.

65. MERCEDES BENZ, in turn, accepted and/or retained those benefits and profits for its own use, notwithstanding the fact that it knew that they resulted from its own wrongdoing, as more fully described herein, and, therefore, that it was not entitled to those benefits.

66. As a direct and proximate result of its misconduct, as more fully described herein, MERCEDES BENZ has been unjustly enriched at the expense of Plaintiffs and the other class members.

WHEREFORE, the Plaintiffs, [redacted] individually and on behalf of all others similarly situated, demand judgment against the Defendant, MERCEDES-BENZ USA, LLC, in the form of disgorgement and restitution for any profits, benefits, or other revenues that MERCEDES BENZ has derived from its misconduct, together with pre- and post-judgment interest, costs, and any and all such further relief to which Plaintiffs and the class are entitled.

COUNT VI: VIOLATION OF MAGNUSON-MOSS CONSUMER PRODUCT WARRANTY ACT

67. Plaintiffs reallege and incorporate by reference the allegations in Paragraph Nos. 1 through 40, as if full set forth herein.

68. This is an action for damages not less than and not greater than the amount necessary to prosecute a claim and for the amounts allowable under the Magnuson-Moss Consumer Product Warranty Act, 15 U.S.C. §2301, *et seq.*

69. At all times material to this action, MERCEDES BENZ impliedly warranted to the Plaintiffs and every other class member that the Subject Vehicles were merchantable, pursuant to the Magnuson-Moss Consumer Product Warranty Act, 15 U.S.C. §2301, *et seq.*

70. MERCEDES BENZ breached that warranty and, in doing so, violated the Magnuson-Moss Consumer Product Warranty Act, 15 U.S.C. §2301, *et seq.* in one or all of the following material respects:

(a) the Subject Vehicles are defective in their design and/or manufacture;

(b) the Subject Part is defective in its design and manufacture;

(c) the Subject Part fails suddenly, prematurely and catastrophically; and

(d) such other breaches as discovery may reveal.

71. As a direct and proximate result of that breach, of warranty, Plaintiffs and other members of the class have suffered and will continue to suffer economic damages, including, but not limited to, loss of value, loss of use, physical damage to the Subject Vehicles, and other injuries and damages described herein.

72. Plaintiffs are entitled to recover their reasonable attorney's fees and costs, pursuant to the Magnuson-Moss Consumer Product Warranty Act, 15 U.S.C. §2301, *et seq.*

WHEREFORE, the Plaintiffs [redacted] individually and on behalf of all others similarly situated, demand judgment against the Defendant, MERCEDES-BENZ USA, LLC, for compensatory damages, plus pre- and post-judgment interest, costs, attorney's fees, and any and all such further relief to which they and the class are entitled.

COUNT VII: INJUNCTIVE RELIEF

73. Plaintiffs reallege and incorporates by reference the allegations in Paragraph Nos. 1 through 40, as if full set forth herein.

74. MERCEDES BENZ has engaged and is continuing to engage in a course of unconscionable, deceptive, and/or unfair conduct in connection with the sale, lease and/or repair of the Subject Vehicles.

75. Plaintiffs are entitled to injunctive relief requiring MERCEDES BENZ to cease and desist from its current business practice of concealing the nature and extent of the inherent defect in the Subject Vehicles and compelling MERCEDES BENZ to recall and repair the Subject Vehicles at its sole expense.

DEMAND FOR JURY TRIAL

Plaintiffs and the class demand trial by jury on all issues so triable as a matter of right.

PUNITIVE DAMAGES

Pursuant to Section 768.72, Florida Statutes, Plaintiffs hereby notify the Court and all interested parties that, at the appropriate time, they intend to seek leave of Court to amend their Complaint to assert claims for punitive damages against MERCEDES BENZ based upon its fraudulent, willful and wanton misconduct, as more fully alleged herein.

DATED this 22nd day of December, 2003.

ANANIA, BANDKLAYDER, BLACKWELL, BAUMGARTEN
TORRICELLA & STEIN
Attorneys for Plaintiffs
Bank of America Tower, Suite 4300
100 Southeast Second Street
Miami, Florida 33131
Telephone: (305) 373-4900
Facsimile: (305) 373-6914

By: _____
Francis A. Anania

Case No: _____

Florida Bar No. 160256
Donald A. Blackwell
Florida Bar No. 370967

- and -

Robert Adams, Esq.
Kendrick Blackwell, Esq.
Stephen C. Diaco, Esq.
ADAMS, BLACKWELL, & DIACO, P.A.
101 E. Kennedy Boulevard
Tampa, Florida 33602
Telephone: (813) 221-8669
Fax: (813) 221-8850

PE03-058
HOGAN & HARTSON
FOR
MERCEDES-BENZ
3/12/2004
ATTACHMENT C

Shown on engine 112

1 *M16 x 1.5 x 77 central bolt*
2 *Vibration damper secondary part*
3 *Elastomer*
4 *Vibration damper primary part*
5 *Woodruff key*
6 *Radial shaft seal*
7 *Timing case cover*
8 *Crankshaft sprocket (timing drive)*
9 *Crankshaft sprocket (oil pump drive)*
10 *Crankshaft*
11 *Top part of oil pan*
12 *Bolt for attaching oil pan*

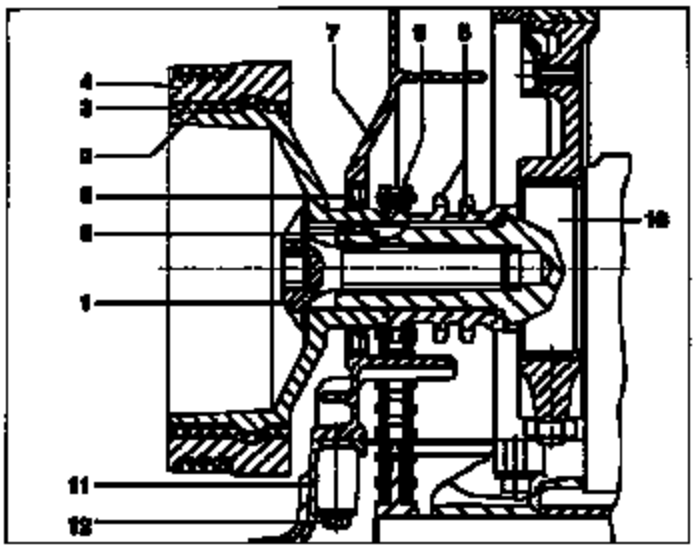

P03.30-0282-11

AR03.30-P-1800-01B	Inspecting belt pulley / vibration damper for axial and radial runout		

Belt pulley / vibration damper

Number	Designation			Motor 112, 113.94/ 98/99	Engine 113.982	Engines 113.996/ 991
BE03.30-P-1001-02A	Permissible difference at vibration damper	Radial runout	mm	0,6	0.4	0.4
		Axial runout	mm	0,3	0,2	0.4

Belt pulley / vibration damper

Number	Designation			Engine 271	Engine 276, 285
BE03.30-P-1001-02C	Permissible difference at vibration damper	Radial runout	mm	0,3	-
		Axial runout	mm	0,3	0,3

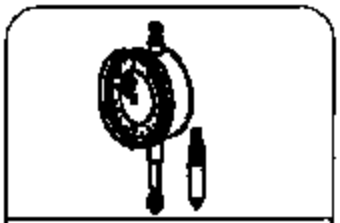

001 589 53 21 00

Dial gage

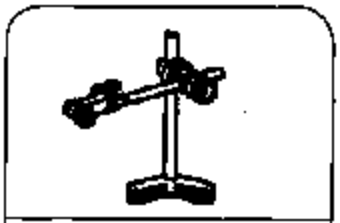

138 589 04 21 00

Dial gage holder

1 [S] Bolt dial gage holder (03) onto timing case cover.

2 [S] Insert dial gage (04) into [S] dial gage holder (03).

3 **Inspect axial runout**
Position tracer pin (05) of [S] dial gage (04) at measuring point (B).

4 Rotate belt pulley/vibration damper (62) by hand, inspect axial runout.

5 **Inspect concentricity**
Position tracer pin (05) of [S] dial gage (04) at measuring point (A).

6 Rotate belt pulley/vibration damper (62) by hand, inspect concentricity.

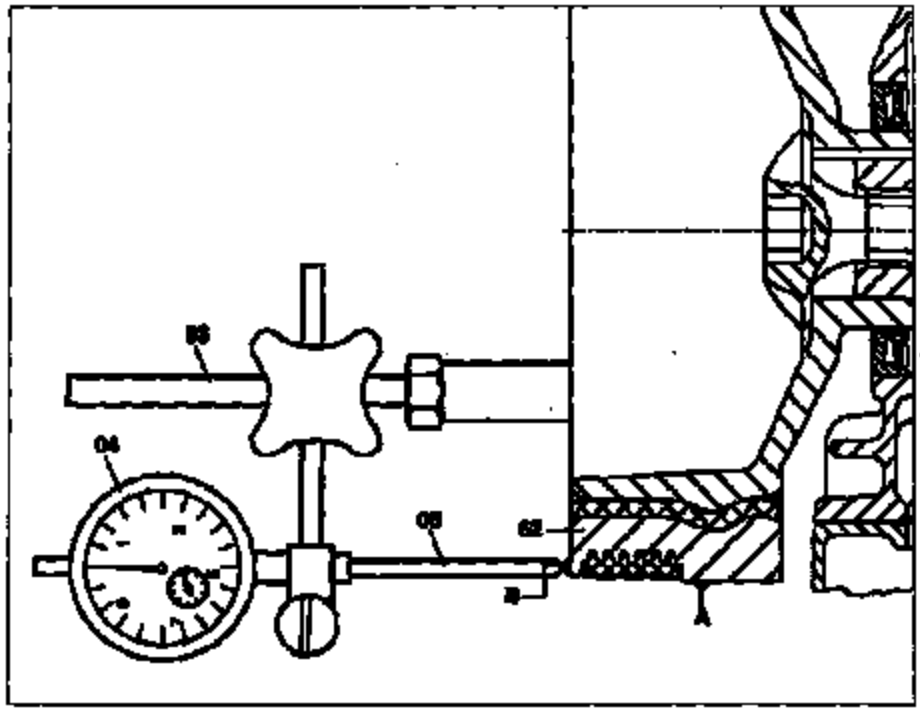

ENGINE 112.947 in MODEL 170
ENGINE 112 in MODEL 202, 208, 209, 210, 220
ENGINE 113 in MODEL 209, 215, 220
ENGINE 112.913 in MODEL 211.061
ENGINE 112.949 in MODEL 211.065
ENGINE 113.987 in MODEL 211.070
ENGINE 113.981 in MODEL 163.174
ENGINE 113.963 in MODEL 230.475
ENGINE 113.992 in MODEL 230.474
ENGINE 113.990 in MODEL 211.076 /276
ENGINE 112.973 in MODEL 230.467

Shown on engine 112

1 *Electric fan*
2 *poly-V-belts*
3 *Fan shroud*
4 *Central bolt*
5 *Belt pulley/vibration damper*

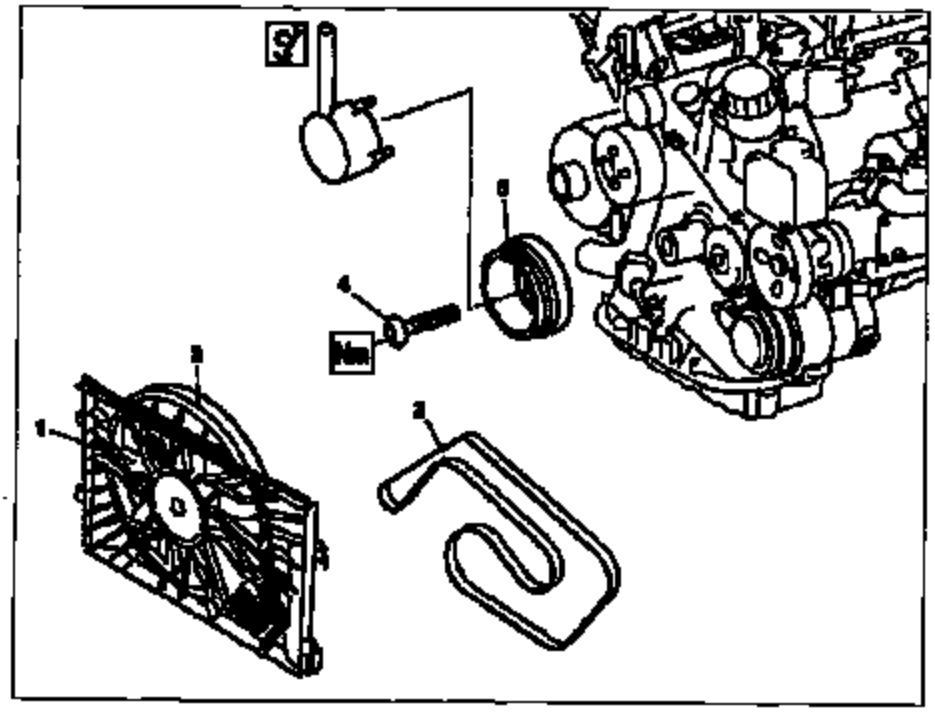

P03.30-3028-08

	Remove/install		
⚠ **Danger!**	**Risk of death. Death may result if vehicle slips or topples from the lifting platform.**	Align vehicle between columns of lifting platform and position the four support plates below support points specified by vehicle manufacturer.	A900.00-Z-0010-01A
1.1	Remove engine compartment paneling	Except Model 230.475 Model 230.467/474 Model 216, 220 Model 202, 208, 210 Model 163.174 Model 170 Model 209 Model 211	 AR61.20-P-1105R AR61.20-P-1105M AR61.20-P-1105AB AR61.20-P-1105GH AR61.20-P-1105A AR61.20-P-1105P AR61.20-P-1105T
2.1	Remove engine trim panel with integrated air cleaner	1 Unclip covering on front side of engine. Remove air cleaner by pulling vertically up and off the cylinder head covers.	
2.2	Remove air cleaner	Model 170.466 Model 211.076/276 Model 216.374, 220.074/174 Model 230.474	AR09.10-P-1150SVK

3.1	Remove electric fan (1)	Except model 202, 208, 210, 220, 230 with Engine 112, model 209 with Engine 112, 113 [1] Model 163 unscrew bolts at bottom of fan shroud (3) Model 163 Model 170	 AR20.40-P-6600GH AR20.40-P-6600BV
3.2	Remove the fan shroud (3)	Except model 211 with Engine 112, model 215, 220, 230 with Engine 113 [1] Before removing the fan shroud (3), separate the connector of the electric fan (1) Model 211.070 Model 211.078/278	 AR20.40-P-6600TB AR20.40-P-6600TC
4.1	Remove poly V-belt of supercharger	Model 211.078/278, 215.374, 220.074/174, 230.474	AR13.21-P-1202RVK
5	Remove poly V-belt (2)	Model 163.174, 202, 208, 210, 215 except 215.374, 220 except 220.074/174 Model 170.465 Model 208.361/461/375/475/376/476/365 /465 Model 211.061/065/070 Model 215.374, 220.074/174, 230.467/474 /475 Model 211.078/278	AR13.22-P-1202BA AR13.22-P-1202SV AR13.22-P-1202PV AR13.22-P-1202R AR13.22-P-1202RV
6.1	Insert retaining lock	Only on vehicles fitted with manual transmission	AR03.30-P-3000B
7 WF	Remove the center bolt (4) Extension for counterholder	[D] Removal: Do not counterhold at ring gear (with retaining lock) in order to remove the center bolt (4). Because of the large tightening torque, counterholding must be performed on the spokes of the belt pulley/vibration damper (5), in order to avoid damage to the ring gear. [1] Installation: Oil thread of center bolt (4). Measure shank length of center bolt (4) (bolt head contact surface to end of shank). Use of center bolt (4) up to shank length max. 78 mm. [Note] [57] Counterholder (except on model 230) Use extension: Except model 230, 163 On model 230: [57] Counterholder	 *BA03.30-P-1001-01D *112589004000 WF58.50-P-0330-02A *230589004000
8 GF	Take off belt pulley / vibration damper (5) Belt pulley/vibration damper, location	[1] Inspect contact surface of hub for signs of wear. If axial runout or concentric running problems exist: Inspecting belt pulley / vibration damper for axial and radial runout [1] Installation: The installation position is given by the spring wedge. Engine 112, 113	 AR03.30-P-1600-01B GF03.30-P-1600-01C
9	Install in the reverse order		
⚠ Danger!	Risk of accident. Accidents may result if the vehicle starts off unintentionally with the engine running. Risk of injury as working around the engine during start-up or while running may result in contusions and burns	Secure vehicle to prevent it from moving. Wear closed and snug-fitting work clothes. Do not grasp hot or rotating parts.	A500.00-Z-0008-01A
10	Carry out engine test run, check for oil leakage	[i] Check oil leakage after spraying the cleaned and dried surrounding area with MB contrast spray. MB contrast spray	 *BR00.45-Z-1001-03A

[Note] Flywheel, driven plate, vibration damper, starter ring gear

Number	Designation			Engine 112.910/911/912/913/914/915/916/917/920/921/922/923/940/941/943/943/944/945/946/947/949/951/953/954/955/960/961/970/972/973/975	Engine 113.94/96/98	Engine 113.990/991/992
BA03.30-P-1001-01D	Central bolt to vibration damper	1st stage	Nm	200	200	200
		Step 2	°	85	95	90

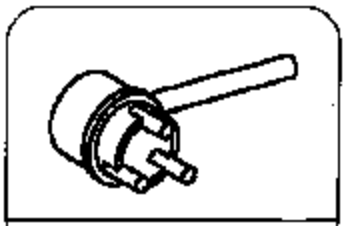

230 589 00 40 00

Counterholder

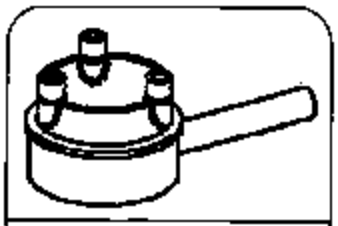

112 589 00 40 00

Counterholder

Auxiliary repair materials

Number	Designation	Order number
BR00.45-Z-1001-03A	MB contrast spray	000 989 03 59

Damper request

In cooperation with Germany we would like to request your assistance with the collection of vibration dampers from certain M112 and M113 engines. The return of and reimbursement for the collected parts will be handled outside of the normal warranty channels. Please find the necessary information below.

Criteria

We are interested in parts from vehicles that meet the following parameters:

1. Model year 1998 or 1999 with M112 or M113 engine.
2. Vehicles must have at least 30,000 miles.
3. Only original dampers or replacement parts that have accumulated at least 30K miles.
4. We do not need vibration damper part number 112 035 09 00.
5. No dampers from AMG vehicles are required.

Information Needed

Please fill in the following blanks and return a copy of this form and a copy of the R.O. as noted below.

1. Model number, i.e., (E320) _____
2. Last seven characters of serial number, i.e., (A123456) _____
3. Complete engine serial number, i.e., 112941 30 654321 _____
4. Mileage _____
5. Retail delivery date _____
6. Removal or Repair Date _____
7. Dealer code _____
8. R.O. number _____
9. Reason for removal or repair, (If the damper is defective place an "X" by Warranty. If the damper is not failing please an "X" by Sample test)

Warranty_____ Sample test_____

Shipping of removed parts

Please box and ship these parts separately from other warranty returns. Failure to do so may result in payment delay. Please ship as indicated below, return receipt requested, and keep copies of all for your records.

Mercedes Benz USA
1 Glenview Road
Montvale, NJ 07645
Attention: Dennis Keaveney
(201) 573-4139

Payment information

DO NOT submit a warranty claim! As stated above please include a copy of the R.O. that reflects your charge for the total replacement. You will be reimbursed for the repair over your consolidated parts statement.

Questions? Please contact your SPOM or RTC at (650)548-5042