EA02-025

FORD 10/27/03

APPENDIX N

BOOK 23 OF 61

PART 4 OF 5

C = COMPLETE
NA = NOT APPLICABLE
TBP = TO BE PERFORMED

Brake Switch Testing Checklist

INF = INFINITY (OPEN)
NP = NOT PERFORMED
NRCLS = NOT RECD AT CEN. LAB.

			Memphis	A	B	C	D	E	F	1
			PY622977	PY665224	NY745119	NY703705	VX145373	NX756774	NY750055	NX762858
Field Info	1	Log Field Info Into Switch Log.xls	C	C	C	C	C	C	C	C
		Condition	FIRE	FIRE	FIRE	FIRE	BF LEAK	NO FIRE/LEAK	BF LEAK	NO FIRE/LEAK
	2	Photograph Switch	C	C	C	C	C	C	C	NP
	3	Record any unusual external visual observations	C	C	C	C	C	C	C	C
	4	Check for Contactor engagement	C	NA	NA	NA	NA	NA	NA	NA
		X-ray if if appropriate	C	NA	NA	NA	NA	NA	NA	NA
Switch + Connector Assembly	5	Wire 1(LGR)to Wire 2(ORANGE) Resistance	NA	NA	NA	NA	NA	NA	NA	NA
	6	Wire 1(LGR) to Hoopet Resistance	NA	NA	NA	NA	NA	NA	NA	NA
	7	Wire 2(ORANGE) to Hoopet Resistance	NA	NA	NA	NA	NA	NA	NA	NA
	8	Separate Harness from Switch	C	NA	NA	C	NA	NA	NA	NA
Contactor Only	9	Verify Connector Seal	C	NA	NA	C	NA	NA	NA	NA
	10	Wire 1(LGR) to Wire 2(ORANGE) resistance	NA	NA	NA	NA	NA	NA	NA	NA
	12	Check for full engagement of connector	NA	NA	NA	NA	NA	NA	NA	NA
	13	Check wire insulation	C	NA	NA	NA	NA	NA	NA	NA
	14	Check wire gray scale	C	NA	NA	NA	NA	NA	NA	NA
	15	Cut wire insulation to check for corrosion	C	NA	NA	NA	NA	NA	NA	NA
Switch External Unpressurized	16	Separate Switch to Calibration Stand	NA	NA	NA	NA	NA	NA	NA	C
	17	Spring Terminal to Stationary Terminal Resistance	NA	NA	NA	NA	0.4	0.2	NP	0.3
	18	Spring Terminal to Hoopet Resistance	NA	NA	NA	NA	4.8M	INF	2M	INF
	19	Stationary Terminal to Hoopet resistance	NA	NA	NA	NA	NP	NP	NP	INF
	20	Case to Hoopet Resistance	NA	NA	NA	NA	1.1	0.8M	NP	3.3M
Switch External Pressurized	24	Switch Opening Pressure	NA	NA	NA	NA	NA	NA	NA	122
	25	Switch Closing Pressure	NA	NA	NA	NA	NA	NA	NA	59
	26	Bowl Test for Leakage	NA	NA	NA	NA	NA	NA	NA	NO LEAK
	27	Repeat Steps 17 through 20 at 140 psig	NA	NA	NA	NA	NA	NA	NA	C
			NA	NA	NA	NA	NA	NA	NA	INF
			NA	NA	NA	NA	NA	NA	NA	INF
			NA	NA	NA	NA	NA	NA	NA	INF
			NA	NA	NA	NA	NA	NA	NA	INF
Switch	28	Remove stainless strap ring	C	C	NP	C	C	C	C	NP
	29	Examine revealed surfaces. Photograph	C	C	NP	C	C	C	C	NP
	30	Remove cap	C	C	NP	C	C	C	C	NP
	31	Examine revealed surfaces. Photograph	C	C	NP	C	C	C	C	NP
Techniques	31	Wire-EDX of RR base, contacts, stainless	C	C	NP	C	C	C	C	NP
	32	SEM-EDX of RR cap, hoopet, washer seals, etc.	C	C	C	C	C	C	C	NP
	33	Metallographic analysis of contacts	C	NA	NP	C	C	C	C	NP

3713 5321

C = COMPLETE
NA = NOT APPLICABLE
TBP = TO BE PERFORMED

Brake Switch Testing Checklist

INF = INFINITY (OPEN)
NP = NOT PERFORMED
NRCLS = NOT RECD AT CEN. LAB.

		Look for evidence of corrosion or arcing	C	NA	NP	C	C	C	C	NP
			3	4	5	6	7	8	9	10
			PY724043	PY526170	PY632329	PY729611	NX728439	PX180223	PX637756	PY689375
Field Info	1	Log Field Info into Switch Log.xls	C	C	C	C	C	C	C	C
		Condition	NO FIRE/LEAK	NO FIRE/LEAK	NO FIRE/LEAK	NO FIRE/LEAK	NO FIRE/LEAK	NO FIRE/LEAK	NO FIRE/LEAK	NO FIRE/LEAK
	2	Photograph Switch	NP	NP	NP	NP	NP	NP	NP	NP
	3	Record any unusual external visual observations	C	C	C	C	C	C	C	C
	4	Check for Connector engagement	NA	NA	NA	NA	NA	NA	NA	NA
		X-ray if it appropriate	NA	NA	NA	NA	NA	NA	NA	NA
Switch + Connector Assembly	5	Wire 1(LGR)to Wire 2(ORANGE) Resistance	NA	NA	NA	NA	NA	NA	NA	NA
	6	Wire 1(LGR) to Hexport Resistance	NA	NA	NA	NA	NA	NA	NA	NA
	7	Wire 2(ORANGE) to Hexport Resistance	NA	NA	NA	NA	NA	NA	NA	NA
	8	Separate Harness from Switch	NA	NA	NA	NA	NA	NA	NA	NA
Connector Only	9	Verify Connector Test	NA	NA	NA	NA	NA	NA	NA	NA
	10	Wire 1(LGR) to Wire 2(ORANGE) resistance	NA	NA	NA	NA	NA	NA	NA	NA
	12	Check for full engagement of connector	NA	NA	NA	NA	NA	NA	NA	NA
	13	Check wire condition	NA	NA	NA	NA	NA	NA	NA	NA
	14	Check wire gray seals	NA	NA	NA	NA	NA	NA	NA	NA
	15	Cut wire insulation to check for corrosion	NA	NA	NA	NA	NA	NA	NA	NA
Switch External Unpressurized	16	Assemble Switch to Calibration Stand	C	C	NA	NA	C	C	C	C
	17	Spring Terminal to Stationary Terminal Resistance	0.2	0.3	NA	NA	0.2	0.2	0.2	2.2
	18	Spring Terminal to Hexport Resistance	INF	INF	NA	NA	INF	INF	INF	INF
	19	Stationary Terminal to Hexport resistance	INF	INF	NA	NA	INF	INF	INF	INF
	20	Case to Hexport Resistance	11.4	1.8M	NA	NA	7.8M	18.5	7.8M	1.4M
Switch External Pressurized	24	Switch Opening Pressure	134	160	NA	NA	147	132	140	137
	25	Switch Closing Pressure	59	88	NA	NA	70	68	112	65
	26	Proof Test for Leakage	NO LEAK	NO LEAK	NA	NA	NO LEAK	NO LEAK	NO LEAK	NO LEAK
	27	Repeat Steps 17 through 20 at 100 psig	C	C	NA	NA	C	C	C	C
			INF	INF	NA	NA	INF	INF	INF	INF
			INF	INF	NA	NA	INF	INF	INF	INF
			INF	INF	NA	NA	INF	INF	INF	INF
			INF	INF	NA	NA	INF	INF	INF	INF
Switch	28	Remove structures using ring	NP	NP	C	C	NP	NP	NP	NP
	29	Sensitive structural surfaces. Photograph	NP	NP	C	C	NP	NP	NP	NP
	30	Remove-up	NP	NP	C	C	NP	NP	NP	NP
	31	Sensitive structural surfaces. Photograph	NP	NP	C	C	NP	NP	NP	NP
Technique	31	[illegible]	NP	NP	NP	NP	NP	NP	NP	NP

3713 5322

C = COMPLETE
NA = NOT APPLICABLE
TBP = TO BE PERFORMED

Brake Switch Testing Checklist

INF = INFINITY (OPEN)
NP = NOT PERFORMED
NRCLS = NOT RECD AT CEM LAB

	32	[illegible]	NP	NP	NP	NP	NP	NP	NP	NP
	33	Metallographic analysis of contacts.	NP	NP	NP	NP	NP	NP	NP	NP
		Look for evidence of corrosion or arcing	NP	NP	NP	NP	NP	NP	NP	NP

			11	12	13	14	15	16	17	18
			PY726066	PX685270	NY740208	PX623872	PY685374	BY639984	PY650225	PY685795
Field Info	1	Log Field info into Bench Log sh	C	C	C	C	C	C	C	C
		Condition	NO FIRE/LEAK	[redacted]	[redacted]	[redacted]	[redacted]	[redacted]	[redacted]	[redacted]
	2	Photograph Switch	NP	[redacted]	[redacted]	[redacted]	[redacted]	[redacted]	[redacted]	[redacted]
	3	Record any unusual external visual observations	C	[redacted]	[redacted]	[redacted]	[redacted]	[redacted]	[redacted]	[redacted]
	4	Check for Connector engagement	NA	[redacted]	[redacted]	[redacted]	[redacted]	[redacted]	[redacted]	[redacted]
		X-ray if appropriate	NA	[redacted]	[redacted]	[redacted]	[redacted]	[redacted]	[redacted]	[redacted]
Switch + Connector Assembly	5	Wire 1(LORB) to Wire 2(ORANGE) Resistance	NA	[redacted]	[redacted]	[redacted]	[redacted]	[redacted]	[redacted]	[redacted]
	6	Wire 1(LORB) to Hesport Resistance	NA	[redacted]	[redacted]	[redacted]	[redacted]	[redacted]	[redacted]	[redacted]
	7	Wire 2(ORANGE) to Hesport Resistance	NA	[redacted]	[redacted]	[redacted]	[redacted]	[redacted]	[redacted]	[redacted]
	8	Separate Harness from Switch	NA	[redacted]	[redacted]	[redacted]	[redacted]	[redacted]	[redacted]	[redacted]
Connector Only	9	Verify Connector Seal	NA	[redacted]	[redacted]	[redacted]	[redacted]	[redacted]	[redacted]	[redacted]
	10	Wire 1(LORB) to Wire 2(ORANGE) resistance	NA	[redacted]	[redacted]	[redacted]	[redacted]	[redacted]	[redacted]	[redacted]
			[redacted]	[redacted]	[redacted]	[redacted]	[redacted]	[redacted]	[redacted]	[redacted]
	12	Check for full engagement of connector	NA	[redacted]	[redacted]	[redacted]	[redacted]	[redacted]	[redacted]	[redacted]
	13	Check wire insulation	NA	[redacted]	[redacted]	[redacted]	[redacted]	[redacted]	[redacted]	[redacted]
	14	Check wire gray mark	NA	[redacted]	[redacted]	[redacted]	[redacted]	[redacted]	[redacted]	[redacted]
	15	Cut wire insulation to check for corrosion	NA	[redacted]	[redacted]	[redacted]	[redacted]	[redacted]	[redacted]	[redacted]
Switch External Unpressurized	16	Assemble Switch to Calibration Stand	C	[redacted]	[redacted]	[redacted]	[redacted]	[redacted]	[redacted]	[redacted]
	17	Spring Terminal to Stationary Terminal Resistance	0.2	[redacted]	[redacted]	[redacted]	[redacted]	[redacted]	[redacted]	[redacted]
	18	Spring Terminal to Hesport Resistance	INF	[redacted]	[redacted]	[redacted]	[redacted]	[redacted]	[redacted]	[redacted]
	19	Stationary Terminal to Hesport resistance	INF	[redacted]	[redacted]	[redacted]	[redacted]	[redacted]	[redacted]	[redacted]
	20	Case to Hesport Resistance	INF	[redacted]	[redacted]	[redacted]	[redacted]	[redacted]	[redacted]	[redacted]
			[redacted]	[redacted]	[redacted]	[redacted]	[redacted]	[redacted]	[redacted]	[redacted]
Switch External Pressurized	24	Switch Opening Pressure	138	[redacted]	[redacted]	[redacted]	[redacted]	[redacted]	[redacted]	[redacted]
	25	Switch Closing Pressure	71	[redacted]	[redacted]	[redacted]	[redacted]	[redacted]	[redacted]	[redacted]
	26	Proof Test for Leakage	NO LEAK	[redacted]	[redacted]	[redacted]	[redacted]	[redacted]	[redacted]	[redacted]
	27	Repeat Steps 17 through 20 at 150 psig	C	[redacted]	[redacted]	[redacted]	[redacted]	[redacted]	[redacted]	[redacted]
		[redacted]	INF	[redacted]	[redacted]	[redacted]	[redacted]	[redacted]	[redacted]	[redacted]
			INF	[redacted]	[redacted]	[redacted]	[redacted]	[redacted]	[redacted]	[redacted]
			INF	[redacted]	[redacted]	[redacted]	[redacted]	[redacted]	[redacted]	[redacted]
			INF	[redacted]	[redacted]	[redacted]	[redacted]	[redacted]	[redacted]	[redacted]
Switch	28	Remove stainless snap ring	NP	[redacted]	[redacted]	[redacted]	[redacted]	[redacted]	[redacted]	[redacted]
	29	Develop revealed surfaces. Photograph	NP	[redacted]	[redacted]	[redacted]	[redacted]	[redacted]	[redacted]	[redacted]
	30	Remove cap	NP	[redacted]	[redacted]	[redacted]	[redacted]	[redacted]	[redacted]	[redacted]

3713 6323

C = COMPLETE
NA = NOT APPLICABLE
TBP = TO BE PERFORMED

Brake Switch Testing Checklist

INF = INFINITY (OPEN)
NP = NOT PERFORMED
NRCLS = NOT REC'D AT CEN. LAB.

	31	[redacted]	NP	[redacted]
Techniques	31	[redacted]	NP	[redacted]
	32	[redacted]	NP	[redacted]
	33	[redacted]	NP	[redacted]
		[redacted]	NP	[redacted]

			19	20	21	22	23	1	2	3
			PY774256	PY754575	PX843515	77	PX629934	PY638890	PX163820	RX841695
Field Info	1	Log Field Info into Switch Logsle	[redacted]	[redacted]	[redacted]	[redacted]	[redacted]	C	C	C
		Condition	[redacted]	[redacted]	[redacted]	[redacted]	[redacted]	NO FIRE/LEAK	NO FIRE/LEAK	NO FIRE/LEAK
	2	Photograph Switch	[redacted]	[redacted]	[redacted]	[redacted]	[redacted]	C	C	C
	3	Record any unusual external visual observations	[redacted]	[redacted]	[redacted]	[redacted]	[redacted]	C	C	C
	4	Check for Caterpillar engagement	[redacted]	[redacted]	[redacted]	[redacted]	[redacted]	C	C	C
		X-ray if appropriate	[redacted]	[redacted]	[redacted]	[redacted]	[redacted]	NA	C	NA
Switch + Connector Assembly	5	Wire 1(Gr)to Wire 2(ORANGE) Resistance	[redacted]	[redacted]	[redacted]	[redacted]	[redacted]	0.3	0.4	0.2
	6	Wire 1(Gr) to Hexport Resistance	[redacted]	[redacted]	[redacted]	[redacted]	[redacted]	INF	INF	INF
	7	Wire 2(ORANGE) to Hexport Resistance	[redacted]	[redacted]	[redacted]	[redacted]	[redacted]	INF	INF	INF
	8	Separate Harness from Switch	[redacted]	[redacted]	[redacted]	[redacted]	[redacted]	C	C	C
Connector Only	9	Verify Connector Seal	[redacted]	[redacted]	[redacted]	[redacted]	[redacted]	C	C	C
	10	Wire 1(Gr) to Wire 2(ORANGE) resistance	[redacted]	[redacted]	[redacted]	[redacted]	[redacted]	INF	INF	INF
	[redacted]									
	12	Check for full engagement of connector	[redacted]	[redacted]	[redacted]	[redacted]	[redacted]	C	C	C
	13	Check wire insulation	[redacted]	[redacted]	[redacted]	[redacted]	[redacted]	C	C	C
	14	Check wire gray areas	[redacted]	[redacted]	[redacted]	[redacted]	[redacted]	C	C	C
	15	Cut wire insulation to check for corrosion	[redacted]	[redacted]	[redacted]	[redacted]	[redacted]	TBP	TBP	TBP
Switch External Unpressurized	16	Assemble Switch to Calibration Stand	[redacted]	[redacted]	[redacted]	[redacted]	[redacted]	C	C	C
	17	Spring Threaded to Stationary Terminal Resistance	[redacted]	[redacted]	[redacted]	[redacted]	[redacted]	0.3	0.1	0.2
	18	Spring Threaded to Hexport Resistance	[redacted]	[redacted]	[redacted]	[redacted]	[redacted]	INF	INF	INF
	19	Stationary Threaded to Hexport resistance	[redacted]	[redacted]	[redacted]	[redacted]	[redacted]	INF	INF	INF
	20	Wire to Hexport Resistance	[redacted]	[redacted]	[redacted]	[redacted]	[redacted]	5.5	INF	17.7K
	[redacted]									
Switch External Pressurized	24	Switch Opening Pressure	[redacted]	[redacted]	[redacted]	[redacted]	[redacted]	156	127	126
	25	Switch Closing Pressure	[redacted]	[redacted]	[redacted]	[redacted]	[redacted]	68	62	64
	26	Final Test for Leakage	[redacted]	[redacted]	[redacted]	[redacted]	[redacted]	NO LEAK	NO LEAK	NO LEAK
	27	Repeat Steps 17 through 20 at 140 psig	[redacted]	[redacted]	[redacted]	[redacted]	[redacted]	C	C	C
			[redacted]	[redacted]	[redacted]	[redacted]	[redacted]	INF	0.1	INF
			[redacted]	[redacted]	[redacted]	[redacted]	[redacted]	INF	INF	INF
			[redacted]	[redacted]	[redacted]	[redacted]	[redacted]	INF	INF	INF
			[redacted]	[redacted]	[redacted]	[redacted]	[redacted]	INF	INF	INF
Switch	28	Remove aluminum wrap ring	[redacted]	[redacted]	[redacted]	[redacted]	[redacted]	NP	C	NP

3713 5324

C = COMPLETE
NA = NOT APPLICABLE
TBP = TO BE PERFORMED

Brake Switch Testing Checklist

INF = INFINITY (OPEN)
NP = NOT PERFORMED
NRCLS = NOT RECD AT CEN. LAB.

	29	[redacted]	[redacted]	[redacted]	[redacted]	[redacted]	[redacted]	NP	C	NP
	30	[redacted]	[redacted]	[redacted]	[redacted]	[redacted]	[redacted]	NP	C	NP
	31	[redacted]	[redacted]	[redacted]	[redacted]	[redacted]	[redacted]	NP	C	NP
Techniques	31	[redacted]	[redacted]	[redacted]	[redacted]	[redacted]	[redacted]	NP	C	NP
	32	[redacted]	[redacted]	[redacted]	[redacted]	[redacted]	[redacted]	NP	C	NP
	33	[redacted]	[redacted]	[redacted]	[redacted]	[redacted]	[redacted]	NP	NP	NP
		[redacted]	[redacted]	[redacted]	[redacted]	[redacted]	[redacted]	NP	C	NP

			4	5	6	7	8	9	10	11
			PX183312	PY610384	NY724358	PY750172	NY733191	PY758156	PX151140	NY757408
Field Info	1	Log Field Info into Switch Log.xls	C	C	C	C	C	C	C	C
		Condition	NO FIRE/LEAK	NO FIRE/LEAK	FIRE	NO FIRE/LEAK	FIRE	NO FIRE/LEAK	NO FIRE/LEAK	NO FIRE/LEAK
	2	Photograph Switch	C	C	C	C	C	C	C	C
	3	Record any unusual external visual observations	C	C	C	C	C	C	C	C
	4	Check for Connector engagement	C	C	NA	C	NA	C	NA	C
		X-ray if if appropriate	C	NA	NA	NA	NA	C	NA	NA
Switch + Connector Assembly	5	Wire 1(LG/Y)to Wire 2(ORANGE) Resistance	NP	0.2	NA	INF	NA	2	0.4	NP
	6	Wire 1(LG/Y) to Hexport Resistance	NP	INF	NA	INF	NA	6.0M	INF	NP
	7	Wire 2(ORANGE) to Hexport Resistance	NP	INF	NA	INF	NA	6.1M	INF	NP
	8	Separate Harness from Switch	C	C	NA	C	NA	C	C	C
Connector Only	9	Verify Connector Seal	C	C	NA	C	NA	C	C	C
	10	Wire 1(LG/Y) to Wire 2(ORANGE) resistance	NP		NA	INF	NA	INF	INF	NP
	11	[redacted]	[redacted]	[redacted]	[redacted]	[redacted]	[redacted]	[redacted]	[redacted]	[redacted]
	12	Check for full engagement of connector	C	C	NA	C	NA	C	C	C
	13	Check wire insulation	C	C	NA	C	NA	C	C	C
	14	Check wire gray seals	C	C	NA	C	NA	C	C	C
	15	Cut wire bundles to check for corrosion	TBP	TBP	NA	TBP	NA	TBP	TBP	TBP
Switch External Unpressurized	16	Accumulate Switch to Calibration Stand	C	C	NA	C	NA	C	C	C
	17	Spring Terminal to Stationary Terminal Resistance	0.1	0.2	NA	0.3	NA	1.5	0.4	0.1
	18	Spring Terminal to Hexport Resistance	INF	INF	NA	INF	NA	6.3M	INF	INF
	19	Stationary Terminal to Hexport resistance	INF	INF	NA	INF	NA	6.4M	INF	INF
	20	Case to Hexport Resistance	INF	140K	NA	402K	NA	0.4	6.8	INF
	21	[redacted]	[redacted]	[redacted]	[redacted]	[redacted]	[redacted]	[redacted]	[redacted]	[redacted]
Switch External Pressurized	24	Switch Opening Pressure	133	151	NA	136	NA	164	136	136
	25	Switch Closing Pressure	69	82	NA	68	NA	86	109	74
	26	Final Test for Leakage	NO LEAK	NO LEAK	NA	NO LEAK	NA	NO LEAK	NO LEAK	NO LEAK
	27	Repeat Steps 17 through 20 at 100 psig	C	C	NA	C	NA	C	C	C
		[redacted]	INF	INF	NA	INF	NA	0.1	INF	INF
		[redacted]	INF	INF	NA	INF	NA	~970K	INF	INF
		[redacted]	INF	INF	NA	INF	NA	~970K	INF	INF

3713 5325

C = COMPLETE
NA = NOT APPLICABLE
TBP = TO BE PERFORMED

Brake Switch Testing Checklist

INF = INFINITY (OPEN)
NP = NOT PERFORMED
NRCLS = NOT RECD AT CEN. LAB.

		[redacted]	INF	INF	NA	INF	NA	INF	INF	INF
Switch	28	[redacted]	NP	NP	NP	NP	NP	C	NP	NP
	29	[redacted]	NP	NP	NP	NP	NP	C	NP	NP
	30	[redacted]	NP	NP	NP	NP	NP	C	NP	NP
	31	[redacted]	NP	NP	NP	NP	NP	C	NP	NP
Techniques	31	[redacted]	NP	NP	NP	NP	NP	C	NP	NP
	32	[redacted]	NP	NP	NP	NP	NP	C	NP	NP
	33	[redacted]	NP	NP	NP	NP	NP	NP	NP	NP
		Look for evidence of corrosion or caking	NP	NP	NP	NP	NP	C	NP	NP

			12	13	OASIS	OASIS	EAA	EAA	EAA	
			PY742858	PY7433413	NY734410	PY605825	PY614885	NY736847	NY708341	
Flight Info	1	Log Field Info into Switch Logsht	C	C	C	C	C	C	C	
		Condition	NO FIRE/LEAK	NO FIRE/LEAK	BF LEAK	BF LEAK	FIRE	FIRE	FIRE	
	2	Photograph Switch	C	C	C	C	C	C	NA	
	3	Record any unusual external visual observations	C	C	C	C	C	C	NA	
	4	Check for Connector engagement	C	C	NA	NA	NA	NA	NA	
		X-ray if if appropriate	C	NA	NA	NA	NA	NA	NA	
Switch + Connector Assembly	5	Wire 10(BRN)to Wire 2(ORANGE) Resistance	0.3	0.3	NA	NA	NA	NA	NA	
	6	Wire 10(BRN) to Hexport Resistance	20.2M	INF	NA	NA	NA	NA	NA	
	7	Wire 2(ORANGE) to Hexport Resistance	21.5M	INF	NA	NA	NA	NA	NA	
	8	Separate Harness from Switch	C	C	NA	NA	NA	NA	NA	
Connector Only	9	Notify Connector Seal	C	C	NA	NA	NA	NA	NA	
	10	Wire 10(BRN) to Wire 2(ORANGE) resistance	INF	INF	NA	NA	NA	NA	NA	
	[redacted]									
	12	Check for full engagement of connector	C	C	NA	NA	NA	NA	NA	
	13	Check wire insulation	C	C	NA	NA	NA	NA	NA	
	14	Check wire gray seals	C	C	NA	NA	NA	NA	NA	
	15	Cut wire insulation to check for corrosion	TBP	TBP	NA	NA	NA	NA	NA	
Switch External Unpressurized	16	Accumulate Switch to Calibration Stand	C	C	C	C	NA	NA	NA	
	17	Spring Terminal to Stationary Terminal Resistance	0.2	0.2	>700K	>130K	NA	NA	NA	
	18	Spring Terminal to Hexport Resistance	34M	INF	>250K	>17K	NA	NA	NA	
	19	Stationary Terminal to Hexport resistance	36M	INF	>350K	>120K	NA	NA	NA	
	20	Case to Hexport Resistance	83.4K	7.5M	INF	INF	NA	NA	NA	
	[redacted]									
Switch External Pressurized	24	Switch Opening Pressure	148	150	152	NO SOUND	NA	NA	NA	
	25	Switch Closing Pressure	61	70	92	NO SOUND	NA	NA	NA	
	26	Final Test for Leakage	NO LEAK	NO LEAK	NO LEAK	NO LEAK	NA	NA	NA	
	27	Repeat Steps 17 through 20 at 100 psig	C	C	C	C	NA	NA	NA	
	[redacted]		0.1	INF	>1.5M	170K	NA	NA	NA	

3713 6326

C = COMPLETE
NA = NOT APPLICABLE
TBP = TO BE PERFORMED

Brake Switch Testing Checklist

INF = INFINITY (OPEN)
NP = NOT PERFORMED
NRCLS = NOT REC'D AT CEN. LAB.

			INF	INF	>600K	>140K	NA	NA	NA	
			INF	INF	>400K	>15K	NA	NA	NA	
			INF	INF	INF	INF	NA	NA	NA	
Switch	28	[redacted]	SCI LAB	NP	C	C	TBP	TBP	NA	
	29	[redacted]	SCI LAB	NP	C	C	TBP	TBP	NA	
	30	[redacted]	SCI LAB	NP	C	C	TBP	TBP	NA	
	31	[redacted]	SCI LAB	NP	C	C	TBP	TBP	NA	
Techniques	31	[redacted]	SCI LAB	NP	TBP	TBP	TBP	TBP	NA	
	32	[redacted]	SCI LAB	NP	TBP	TBP	TBP	TBP	NA	
	33	[redacted]	SCI LAB	NP	TBP	TBP	TBP	TBP	NA	
		[redacted]	SCI LAB	NP	TBP	TBP	TBP	TBP	NA	

Field Info	1	[redacted]								
	2	[redacted]								
	3	[redacted]								
	4	[redacted]								
		[redacted]								
Switch + Connector Assembly	5	[redacted]								
	6	[redacted]								
	7	[redacted]								
	8	[redacted]								
Connector Only	9	[redacted]								
	10	[redacted]								
	[redacted]									
	12	[redacted]								
	13	[redacted]								
	14	[redacted]								
	15	[redacted]								
Switch External Unpressurized	16	[redacted]								
	17	[redacted]								
	18	[redacted]								
	19	[redacted]								
	20	[redacted]								
	[redacted]									
Switch External Pressurized	24	[redacted]								
	25	[redacted]								
	26	[redacted]								
	27	[redacted]								

3713 5327

C = COMPLETE
NA = NOT APPLICABLE
TBP = TO BE PERFORMED

Brake Switch Testing Checklist

INF = INFINITY (OPEN)
NP = NOT PERFORMED
NRCLS = NOT RECD AT CEN. LAB.

	[redacted]									
Switch	28	Remove stainless steel ring								
	29	Examine revealed surfaces. Photograph								
	30	Remove cup								
	31	Examine revealed surfaces. Photograph								
Technique	31	SEM-EDX AFTER base, stainless, lowfrate								
	32	SEM-EDX AFTER cup, bonport, washer seals, etc.								
	33	Metallographic analysis of stainless								
		Look for evidence of corrosion or mating								

3713 5928

Summary

Vehicle	1992									
	# of thermal events - engine off/unknown	# of thermal events - engine on/off/unknown	Switch base material	Switch vehicle location - splash zone	Switch orientation - from vertical	Wire routing - drip loop	W/A connector face	W/A wire type/connector grommet	Proximity to combustible material	Recommendation
Town Car			4	5	4	5			2	
Crown Vic/Grand Marquis			4	5	4	5			2	
Econoline/Club Wagon				7	4	5			2	
F-Series										
Ranger										
Explorer										
Capri										
Expedition										
Bronco										
Falcon										
Mark VIII										
Navigator										
Taurus SHO										
Windstar										

Vehicle	1993 Connector Face Seal									
	# of thermal events - engine off/unknown	# of thermal events - engine on/off/unknown	Switch base material	Switch vehicle location - splash zone	Switch orientation - from vertical	Wire routing - drip loop	W/A connector face	W/A wire type/connector grommet	Proximity to combustible material	Recommendation
Town Car			4	5	4	5			2	
Crown Vic/Grand Marquis			4	5	4	5			2	
Econoline/Club Wagon				7	4	5			2	
F-Series				5	2	4			1	
Ranger										
Explorer										
Capri										
Expedition										
Bronco										
Falcon										
Mark VIII			4							
Navigator										
Taurus SHO										
Windstar										

Vehicle	1994									
	# of thermal events - engine off/unknown	# of thermal events - engine on/off/unknown	Switch base material	Switch vehicle location - splash zone	Switch orientation - from vertical	Wire routing - drip loop	W/A connector face	W/A wire type/connector grommet	Proximity to combustible material	Recommendation
Town Car			4	5	4	5			2	
Crown Vic/Grand Marquis			4	5	4	5			2	
Econoline/Club Wagon			3	2	4	3			2	
F-Series			3	2	1	3			2	
Ranger										
Explorer										
Capri										
Expedition										
Bronco			3							
Falcon										
Mark VIII			4							
Navigator										
Taurus SHO										
Windstar										

3713 5329

Summary

Vehicle	1995									
	# of thermal events - engine off/unknown	# of thermal events - engine on/off/unknown	Switch base material	Switch vehicle location - splash zone	Switch orientation - from vertical	Wire routing - drip loop	W/A connector face	W/A wire type/connector grommet	Proximity to combustible material	Recommendation
Town Car			4	5	4	5			2	
Crown Vic/Grand Marquis			4	5	4	5			2	
Econoline/Club Wagon			3							
F-Series			3							
Ranger			3							
Explorer			3	2	1	3			2	
Capri										
Expedition										
Bronco			3							
Falcon										
Mark VIII				2	1	1				
Navigator										
Taurus SHO				2	1	1			2	
Windstar				2	1	1			2	

Vehicle	1996									
	# of thermal events - engine off/unknown	# of thermal events - engine on/off/unknown	Switch base material	Switch vehicle location - splash zone	Switch orientation - from vertical	Wire routing - drip loop	W/A connector face	W/A wire type/connector grommet	Proximity to combustible material	Recommendation
Town Car			4	5	4	5			2	
Crown Vic/Grand Marquis			4	5	4	5			2	
Econoline/Club Wagon			3							
F-Series			3	2	4	3			2	
Ranger			3	2	4	3			2	
Explorer			3	2	4	3			2	
Capri										
Expedition										
Bronco			3	2	4	3			2	
Falcon										
Mark VIII										
Navigator										
Taurus SHO										
Windstar				2	1	1			2	

Vehicle	1997									
	# of thermal events - engine off/unknown	# of thermal events - engine on/off/unknown	Switch base material	Switch vehicle location - splash zone	Switch orientation - from vertical	Wire routing - drip loop	W/A connector face	W/A wire type/connector grommet	Proximity to combustible material	Recommendation
Town Car			4	5	4	5			2	
Crown Vic/Grand Marquis			4	5	4	5			2	
Econoline/Club Wagon			3	2	1	1			2	
F-Series			3	2	4	3			2	
Ranger			3							
Explorer			3							
Capri										
Expedition										
Bronco			3	2	4	3			2	
Falcon										
Mark VIII										
Navigator				3	1	1			2	
Taurus SHO										
Windstar				2	1	1				

3713 5330

Summary

Vehicle	1998										1999									
	# of thermal events - engine off/unknown	# of thermal events - engine on/off/unknown	Switch base material	Switch vehicle location - splash zone	Switch orientation - from vertical	Wire routing - drip loop	W/A connector face	W/A wire type/connector grommet	Proximity to combustible material	Recommendation	# of thermal events - engine off/unknown	# of thermal events - engine on/off/unknown	Switch base material	Switch vehicle location - splash zone	Switch orientation - from vertical	Wire routing - drip loop	W/A connector face	W/A wire type/connector grommet	Proximity to combustible material	Recommendation
Town Car																				
Crown Vic/Grand Marquis																				
Econoline/Club Wagon			3										3	2	1	1				
F-Series			3										3						2	
Ranger			3										3	2	4	3			2	
Explorer			3	2	4	3			2				3	2	4	3			2	
Capri																				
Expedition			3	2	4	3			2				3	2	1	1			2	
Bronco																				
Falcon																				
Mark VIII																				
Navigator			3	2	4	3			2				3							
Taurus SHO																				
Windstar				2	1	1			2					2	1	1			2	

3713 5331

Scale Definition

Switch Base Material
- 4 Celanex 4300 - UL rating HB
- 3 Noryl GTX 830 - UL rating HB
- 2 Celanex 3316 - UL rating V0
- 1 Zytel - UL rating V0

Switch vehicle location - splash zone
- 8 Wheel well
- 7 Underbody - spray line
- 6 Underbody - out of spray line
- 5 Engine compartment - low
- 4 Engine compartment - middle
- 3 Wheel well - behind splash guard
- 2 Engine compartment - high
- 1 Passenger compartment

Switch orientation - from vertical
- 4 0° to 90°
- 2 90° to 135°
- 1 135° to 180°

Proximity to combustible material
- 2 0" - 9"
- 1 > 9"

Wire routing - drip loop

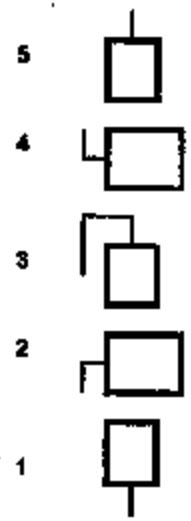

Connector Face Seal
- 9 Foam
- 3 Silicone

Wire to Connector Grommet Seal
- 9 Incompatible
- 1 Compatible

8719 6992

Vehicle	1992	1993	1994	1995	1996	1997	1998	1999
Town Car	4	4	4	4	4	4	0	0
Crown Vic/Grand Marquis	4	4	4	4	4	4	0	0
Econoline/Club Wagon	0	0	3	3	3	3	3	3
F-Series	0	0	3	3	3	3	3	3
Ranger	0	0	0	3	3	3	3	3
Explorer	0	0	0	3	3	3	3	3
Capri	0	0	0	0	0	0	0	0
Expedition	0	0	0	0	0	3	3	3
Bronco	0	0	3	3	3	0	0	0
Falcon	0	0	0	0	0	0	0	0
Mark VIII	0	4	4	0	0	0	0	0
Navigator	0	0	0	0	0	0	3	3
Taurus SHO	0	0	0	0	0	0	0	0
Windstar	0	0	0	0	0	0	0	0

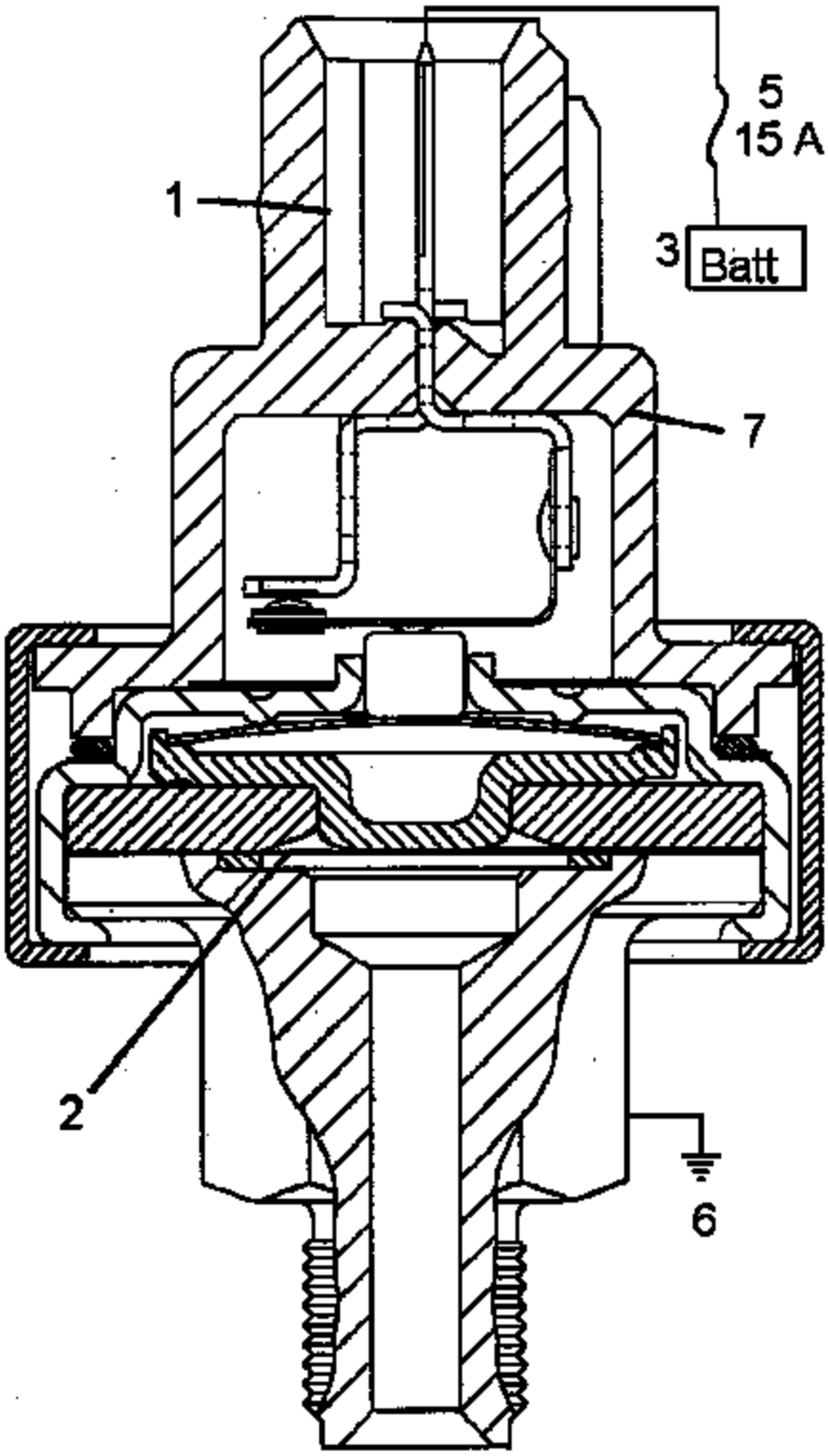

3713 5334

Vehicle/Customer Information/Incident Info

Model Year: Make: VIN#: Mileage (at inspection):

Inspection Date/Location: Vehicle Owner:

Incident date: Approximate mileage at incident:

Inspector Name:

Requested Info
Area of fire origination (engine compartment quadrant, component, etc)

Identify if any underhood relays show evidence of internal overheat

Identify if any fuses or fuse links were blown or show evidence of other damage

Determine if the correct fuse for the stop lamp switch in the fuse box

Identify is there was any damage to wiring in the area where the fire was started (ie chafing, melting insulation)

Assess whether the air suspension pump shows evidence of internal overheating

Identify if there were any aftermarket modifications to the vehicle? (specifically car alarm, trailer tow, or remote start)

If possible, identify if the vehicle was involved in a natural disaster/accident that required significant vehicle clean up? If so where was cleanup performed?

If possible, identify vehicle repair history

Any other info that may be pertinent to the incident...

Parts that we would like from vehicle if possible to acquire
Brake pressure switch (preferably with wire pigtail/connector attached and still attached to prop valve)

Sample of brake fluid at prop valve (in sealed glass container)

Relay pack located on LH fender apron (with as much wiring as possible)

EDIS 8 module located on LH fender

Speed control module located on LH fender

Air suspension compressor located under air filter

Air suspension relay

Photograph of door jam VIN sticker

Other suspect parts

-9F924- Brake Pressure Switch
Speed Control Inoperative (CCC - A25)
Burned Out (CD - 46)

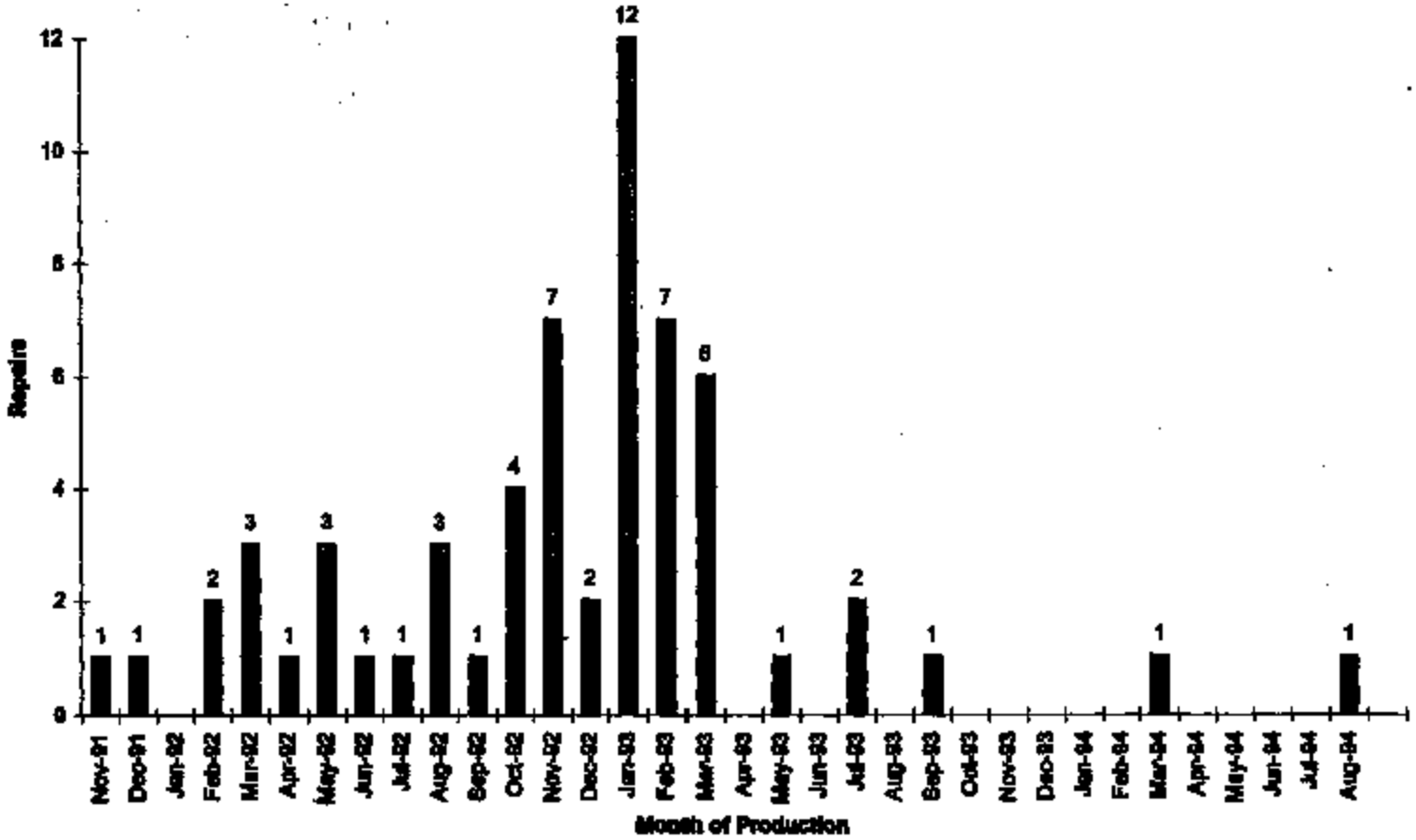

3713 5387

Nov-91	1
Dec-91	1
Jan-92	
Feb-92	2
Mar-92	3
Apr-92	1
May-92	3
Jun-92	1
Jul-92	1
Aug-92	3
Sep-92	1
Oct-92	4
Nov-92	7
Dec-92	2
Jan-93	12
Feb-93	7
Mar-93	6
Apr-93	
May-93	1
Jun-93	
Jul-93	2
Aug-93	
Sep-93	1
Oct-93	
Nov-93	
Dec-93	
Jan-94	
Feb-94	
Mar-94	1
Apr-94	
May-94	
Jun-94	
Jul-94	
Aug-94	1

Evaluation Process
Brake Pressure switch / Harness

Brake Pressure Switch Plan Updated 2/16/99
Evaluation Plan for Field Returns

Sw #		Date of update	
Mileage		Sw Date Code	
Sw P/N			

Category	Step #	Action	Notes/Data	Comments
Field Info	1	Log Field Info into Switch Log.xls		
	2	Photograph Switch		
	3	Record any unusual external visual observations		
	4	Check for Connector engagement		If not correct conduct X-Ray to determine fit-up between base lip and red seal
Switch + Connector Assembly	5	Wire 1(LG/R)to Wire 2(ORANGE) Resistance		
	6	Wire 1(LG/R) to Hexport Resistance		
	7	Wire 2(ORANGE) to Hexport Resistance		
	8	Separate Harness from Switch		
Connector Only	9	Verify Connector Seal		Visual check of Red Seal, Dirt lines, Indentation mark.. Indentation mark must be 360 degrees.
	10	Wire 1(LG/R) to Wire 2(ORANGE) resistance		
	11	Current Leakage Wire 1(LG/R) to Wire 2(ORANGE)		
	12	Check for full engagement of connector		Visual check of dirt lines on mated switch base
	13	Check wire insulation		
	14	Check wire gray seals		
	15	Cut wire insulation to check for corrosion		Cut insulation longitudinally to check for wicking along wires. If signs of corrosion, identify color, save samples for chem i.d.
Switch + External Unpressurized	16	Assemble Switch to Calibration Stand		
	17	Spring Terminal to Stationary Terminal Resistance		Stationary Terminal is closest to the outside connector keying tab.
	18	Spring Terminal to Hexport Resistance		
	19	Stationary Terminal to Hexport resistance		

Steve Reimers, 313 390 3288,
sreimers@ford.com
file evalproc.xls

printed 6/1/99 9:24 AM
uncontrolled document

original 2/16/99
revised tbd

3713 5339

Evaluation Process
Brake Pressure switch / Harness

	20 Base to Hexport Resistance	
	21 Current Leakage Spring Terminal to Hexport	
	22 Current Leakage Stationary Terminal to Hexport	
	23 Voltage drop at 750 mA	
Switch External Pressurized	24 Switch Opening Pressure	Do not perform on parts from underhood fires, as may disturb diaphragm/other condition
	25 Switch Closing Pressure	Do not perform on parts from underhood fires, as may disturb diaphragm/other condition
	26 Proof Test for Leakage	Do not perform on parts from underhood fires, as may disturb diaphragm/other condition
	27 Repeat Steps 17 through 23 at 180 psig	
Switch Internal	Procedure to remove aluminum crimp ring	
	Use aluminum foil (or plastic if Ford prefers) to mask the analysis surface.	
	Also create a paper/tape shield to further reduce chance of contamination during cutting of crimp ring.	
	Place a piece of tape over the area to be cut.	
	Cut crimp ring using jewelers saw or Dremel cutoff wheel	
	Cut corners of ring at 180 degree orientation	
	Unfold crimp ring	
	Optically examine revealed surfaces. Take optical photographs (Digital camera with macro lens plus instant microphotography) and document observations where appropriate.	
	Inside surface of crimp ring.	
	Seal area and underside of base	
	Top of cup	
Analytical Techniques SEM/EDX/IR	Assess Need for Analytical Techniques	
	Start SEM-EDX (Scanning Electron Microscope with Energy Dispersive Analysis of X-rays) analysis on the inside of the ring and on various surfaces of the plastic base.	
	Reprotect the top surface and remove the cup	
	Optically document all revealed surfaces starting with cup.	
	Meanwhile, start SEM-EDX analysis on top side of cup. . Particularly look for evidence of corrosion or arcing	
	Particularly focus in on the edges of the ceramic pin guide and on the indented ring that lines up with interior wall of the switch cavity	
	Particularly look for evidence of corrosion or arcing	
	Decide if we should try to flake off any of the overlaying debris to try to examine the underlying metal surface.	
	Proceed to perform SEM-EDX analysis on other component surfaces revealed by removal of cup.	
Data Entry	Log All data from this sheet into Switch Log	
	Photographs, Elemental maps etc must be retained and referenced by Switch #	

Steve Reimers, 313 390 3288,
sreimers@ford.com
file evalproc.xls

original 2/15/99
revised tbd

3713 5340

1992-1995 TOWN CAR CRUISE CONTROL BRAKE SWITCH INSPECTIONS

92-95 TC INSPECTIONS .XLS 3-18-99

CASE No	LOCATION	VIN	EAA SA	EAA NOTI FIED	OWNER	ADDRESS	TELEPHONE	CONTACT AND VEHICLE LOCATION	TELEPHONE	SCHEDULE D INSPECTI ON DATE
NA Abramcek	Memphis TN	1LNLM81W8NY[redacted]	Mullins	3-11-99 Abramcek	[redacted]			Schilling Lincoln-Merc 3550 Mendenhall Memphis TN	James Farris (901)363-1350	3/16/99
1	Naples FL	1LNLM81W8NY[redacted]	Burnett	3-12-99 PM				owner	Same	3/23/99
2	Aurora IL	1LNLM82W8FY[redacted]	Mullins	3-11-99 3:55PM				350 E Sullivan Aurora IL 60505	(630) 896-5300	3/17/99
3N	Tyler TX	1LNLM81W2NY[redacted]	Albritton	3-11-99 3:15PM				Glen Bolton	(903) 566-1980	3/22/99
15N	Houston TX	1LNLM82W4NY[redacted]	Albritton	3-12-99 4:45PM				Insurance Auto Auction 13575 Hiram Clarke Dr Houston TX 77045		3/26/99
16N	Davenport FL	1LNLM81W0NY[redacted]	Burnett	3-12-99 2:10PM				Same	Same	3/19/99
17N	Ft Myers FL	1LNLM82W8NY[redacted]	Burnett	3-12-99 4:10PM				Western Car Tops 1995 Custom Drive Ft Myers FL 33907	(941) 743-5520	3/26/99
18										
19										
20										
21										
22										
23										
24										
25										

3713 5941

1992-1995 TOWN CAR CRUISE CONTROL BRAKE SWITCH INSPECTIONS

92-95 TC INSPECTIONS .XLS 3-19-99

Notes:

N suffix in a case number indicates that the case was supplied to Ford by NHTSA.

All reports are double copied and photos are triple copied and sent as follows:

1 copy of report and photos to Farsen

1 copy of report and 2 copies of photos to Joe Nerre

Sent by fastest means possible (overnight strongly desired)

All parts to be carefully packaged & sent to Ford Central Testing Lab, Department T118 with the following:

Sheet with VIN, date inspected, name, phone & fax of EAA SA who inspected the vehicle

and "If any questions, please contact Joe Nerre at (313) 390-8133 ". If you are having

difficulty contacting the EAA inspector immediately contact Alan Haas at EAA, phone (248) 642-3232 X146, fax (248) 642-4558.

Send via fastest means available (overnight strongly preferred)

To be addressed to "Department T118 - EAA Project # F002A"

When requested, EAA will provide additional copies of reports and/or photos. Contact Alan Haas at the numbers listed above.

EAA will schedule inspections and notify any Ford representative who has asked to attend.

Notification will be completed within one hour after establishing the inspection date and time.

If an insurance company or others assigned by them is delaying the inspection of an NHTSA case, EAA (Alan Haas) will immediately

contact Ray Navi to help resolve the issue. Similar delays with non-NHTSA assigned cases will be immediately directed

to Joe Nerre for assistance in resolving delay issues.

Farsen Ansari will call Alan Haas regarding each case and will also send the questionnaire (with her comments added) to the

assigned EAA inspector's fax and also send a copy to Alan Haas by fax. Alan Haas will provide the name of the EAA

inspector who has been assigned to each case

Priority of cases is as follows: (1) NHTSA, (2)older most recent, (3) other older cases

Daily status report to be sent by Alan Haas by e-mail to Joe Nerre, Bill Abminczyk, Ray Navi, tporter@ford.com, trwalsw@ford.com,

and fansari1@ford.com. The attached EXCEL file will be formatted at an EXCEL level which will enable all addresses

Questionnaire "rev" level to be added to each case. As questionnaire revisions are made this will aid in understanding which

questions were asked in any given case. Alan Haas to maintain an electronic file of these "rev" levels.

Reports and photo negatives are to be maintained by EAA inspectors until such time as Ford requests these materials to be sent to

Ford. EAA will retain no copies of these materials after that point in time.

3713 5342

1992-1995 TOWN CAR CRUISE CONTROL BRAKE SWITCH INSPECTIONS

92-95 TC INSPECTIONS .XLS 3-19-99

CASE No	DATE COMPLETED	REPORT REV #	COMMENTS
N/A Abramczik	3/16/99	1.0	Ford reps may be present
1	3/23/99	2.0	Dennis(?) Lino-Merc repaired car. Car is spotless per Burnett and the owner is willing to sell it to Ford.
2	3/17/99	1.0	John Kessler present at inspection. Severe heat melted aluminum hood. Could remove only cruise brake switch.
3N	3/22/99	2.0	MHTSA not present at inspection. Glenn Bolton, All State Ins. rep, would not permit any parts to be removed or brake fluid samples to be taken. Note blown fuse service history that is included in the report.
16N			Reps from USAA & Blue Eag will witness insp & approve parts removal. Inspection rescheduled tentatively for Friday, 3-26-99, due to personal emergency.
15N	3/17/99	1.0	Owner requests not to call before Tuesday 3-16-99.
17N			Ron Stewart (NW) & Florida Ins survival, Warden Wallmore, want to witness inspection. Expect FPM callback to reschedule inspection for later this week.
18			
19			
20			
21			
22			
23			
24			
25			

3713 5343

1992-1995 TOWN CAR CRUISE CONTROL BRAKE SWITCH INSPECTIONS

92-95 TC INSPECTIONS . XLS 3-10-99

3713 6344

1992-1995 TOWN CAR ELECTRICAL INSPECTIONS

Fo72db_1

CASE No	LOCATION	VIN	EAA SA	EAA NOTIFIED	OWNER	ADDRESS	TELEPHONE	CONTACT AND VEHICLE LOCATION	TELEPHONE	SCHEDULED INSPECTION DATE	
N/A Abramczk	Memphis TN	1LNLM81W6NY[redacted]	Mullins	3-11-99 Abramczk	[redacted]			Schilleg Lincoln-Mer 3550 Mendenhall Memphis TN	James Farris (901)383-1380	3/16/99	
1	Naples FL	1LNLM81W5NY[redacted]	Burnett	3-12-99 PM				owner	Same	3/23/99	
2	Aurora IL	1LNLM82W5PY[redacted]	Mullins	3-11-99 3:55PM				580 E Sullivan Aurora IL 60505	(630) 898-6300	3/17/99	
3N	Tyler TX	1LNLM81W2NY[redacted]	Allbritten	3-11-99 3:15PM				Glen Bolton	(903) 566-1980	3/22/99	
16N	Houston TX	1LNLM82W4NY[redacted]	Allbritten	3-12-99 4:45PM				Insurance Auto Auction 12378 Hiram Clarke Dr Houston TX 77045	.	3/26/99	
16N	Davenport FL	1LNLM81W0NY[redacted]	Burnett	3-12-99 2:10PM				Same	Same	3/19/99	
17N	Ft Myers FL	1LNLM82W8NY[redacted]	Burnett	3-12-99 4:10PM				Kustom Car Tops 1058 Custom Drive Ft Myers FL 33907	(941) 743-6520	3/29/99	
18											
19											
20											
21											
22											
23											
24											
25											

3713 5345

1992-1995 TOWN CAR ELECTRICAL INSPECTIONS

Fo72db_1

Notes:

N suffix in a case number indicates that the case was supplied to Ford by NHTSA.

All reports are double copied and photos are triple copied and sent as follows:

1 copy of report and photos to Farasa

1 copy of report and 2 copies of photos to Joe Nama

Sent by fastest means possible (overnight strongly desired)

All parts to be carefully packaged & sent to Ford Central Testing Lab, Department T119 with the following:

Sheet with VIN, date inspected, name, phone & fax of EAA IA who inspected the vehicle

and "If any questions, please contact Joe Nama at (313) 390-8133 ". If you are having

difficulty contacting the EAA inspector immediately contact Alan Haas at EAA, phone (248) 642-3232 X148, fax (248) 642-4668.

Send via fastest means available (overnight strongly preferred)

To be addressed to "Department T119 - EAA Project # F002A"

When requested, EAA will provide additional copies of reports and/or photos. Contact Alan Haas at the numbers listed above.

EAA will schedule inspections and notify any Ford representative who has asked to attend.

Notification will be completed within one hour after establishing the inspection date and time.

If an insurance company or others assigned by them is delaying the inspection of an NHTSA case, EAA (Alan Haas) will immediately

contact Ray Navi to help resolve the issue. Similar delays with non-NHTSA assigned cases will be immediately directed

to Joe Nama for assistance in resolving delay issues.

Farasa Assari will call Alan Haas regarding each case and will also send the questionnaire (with her comments added) to the

assigned EAA inspector's fax and also send a copy to Alan Haas by fax. Alan Haas will provide the name of the EAA

inspector who has been assigned to each case

Priority of cases is as follows: (1) NHTSA, (2)other most recent, (3) other older cases

Daily status report to be sent by Alan Haas by e-mail to Joe Nama, Bill Abrahczyk, Ray Navi, fpoder@ford.com, tmartens@ford.com,

and fassarif@ford.com. The attached EXCEL file will be formatted at an EXCEL level which will enable all addressees.

Questionnaire "rev" level to be added to each case. As questionnaire revisions are made this will aid in understanding which

questions were asked in any given case. Alan Haas to maintain an electronic file of these "rev" levels.

Reports and photo negatives are to be maintained by EAA inspectors until such time as Ford requests these materials to be sent to

Ford. EAA will retain no copies of these materials after that point in time.

3713 6346

1992-1995 TOWN CAR ELECTRICAL INSPECTIONS

Fo72db_1

CASE No	DATE COMPLETE D	REPORT REV #	COMMENTS
NIA Abramczak	3/18/99	1.0	Ford reps may be present
1	3/23/99	2.0	Darmain(?) Lisc-Mero repaired car. Car is spotless per Burnett and the owner is willing to sell it to Ford.
2	3/17/99	1.0	John Keester present at inspection. Severe heat melted aluminum hood. Could remove only cruise brake switch.
3N	3/22/99	2.0	NHTSA not present at inspection. Glass Bolton, All State Ins. rep, would not permit any parts to be removed or brake fluid samples to be taken. Note blown fuse service history that is included in the report.
15N			Reps from USAA & Bloco Eng will witness insp & approve parts removal. Inspection rescheduled tentatively for Friday, 3-26-99, due to personal emergency.
16N	3/17/99	1.0	Owner requests not to call before Tuesday 3-16-99.
17N			Ron Stewart (NWI) & Florida fire marshall, Warden Wellmore, went to witness inspection. Expect PPM callback to reschedule inspection for later this week.
18			
19			
20			
21			
22			
23			
24			
25			

3713 5347

1992-1995 TOWN CAR ELECTRICAL INSPECTIONS

Fo72db_1

8713 6948

1992-1995 TOWN CAR ELECTRICAL INSPECTIONS

Fo9e9e_1

CASE No	LOCATION	VIN	EAA SA	EAA NOTI FIED	OWNER	ADDRESS	TELEPHONE	CONTACT AND VEHICLE LOCATION	TELEPHONE	SCHEDULED DATE
N/A Abramczk	Memphis TN	1LNLM81W8NY[redacted]	Mullins	3-11-99 Abramczk	[redacted]			Schilling Lincoln-Merc 2599 Mendenhall Memphis TN	Jaime Ferris (901)363-1380	3/18/99
1	Naples FL	1LNLM81W5NY[redacted]	Burnett	3-12-99 PM				owner	Same	3/23/99
2	Aurora IL	1LNLM82W8PY[redacted]	Mullins	3-11-99 3:55PM				250 E Sullivan Aurora IL 60505	(630) 896-6300	3/17/99
3N	Tyler TX	1LNLM81W2NY[redacted]	Allerdice	3-11-99 3:15PM				Glen Bolton	(903) 596-1980	3/22/99
14N										
15N										
16N										
15N	Houston TX	1LNLM82W4NY[redacted]	Allerdice	3-12-99 4:45PM				Insurance Auto Auction 12575 Hiram Clarke Dr Houston TX 77045		4/1/99
16N	Davenport FL	1LNLM81W0NY[redacted]	Burnett	3-12-99 2:10PM				Same	Same	3/19/99
17N										
17N										
17N	Ft Myers FL	1LNLM82W4NY[redacted]	Burnett	3-12-99 4:10PM	[redacted]			Kustom Car Tops 1868 Custom Drive Ft Myers FL 33907	(941) 743-6520	3/31/99
20N	Gibsonton, FL	2MECM74W8X[redacted]	Burnett	3/31/1999 :00 PM				Copart Salvage Route 41 Gibsonton, FL	N/A	4/5/99

3713 5349

1992-1995 TOWN CAR ELECTRICAL INSPECTIONS

FoDaSa_1

Notes:

N suffix in a case number indicates that the case was supplied to Ford by NHTSA.

All reports are double copied and photos are triple copied and sent as follows:

1 copy of report and photos to Fareen

1 copy of report and 2 copies of photos to Joe Nemo

Sent by fastest means possible (overnight strongly desired)

All parts to be carefully packaged & sent to Ford Central Testing Lab, Department T115 with the following:

Sheet with VIN, date inspected, name, phone & fax of EAA IA who inspected the vehicle

and "If any questions, please contact Joe Nemo at (313) 390-8133 ". If you are having

difficulty contacting the EAA inspector immediately contact Alan Hess at EAA, phone (248) 642-3232 X146, fax (248) 642-4558.

Send via fastest means available (overnight strongly preferred)

To be addressed to "Department T115 - EAA Project # F002A"

When requested, EAA will provide additional copies of reports and/or photos. Contact Alan Hess at the numbers listed above.

EAA will schedule inspections and notify any Ford representative who has asked to attend.

Notification will be completed within one hour after establishing the inspection date and time.

If an insurance company or others assigned by them is delaying the inspection of an NHTSA case, EAA (Alan Hess) will immediately contact Ray Neal to help resolve the issue. Similar delays with non-NHTSA assigned cases will be immediately directed to Joe Nemo for assistance in resolving delay issues.

Fareen Ansari will call Alan Hess regarding each case and will also send the questionnaire (with her comments added) to the assigned EAA inspector's fax and also send a copy to Alan Hess by fax. Alan Hess will provide the name of the EAA inspector who has been assigned to each case

Priority of cases is as follows: (1) NHTSA, (2)other most recent, (3) other older cases

Daily status report to be sent by Alan Hess by e-mail to Joe Nemo, Bill Abramczik, Ray Neal, fporter@ford.com, lmeetem@ford.com, and fansari1@ford.com. The attached EXCEL file will be formatted at an EXCEL level which will enable all addressees

Questionnaire "rev" level to be added to each case. As questionnaire revisions are made this will aid in understanding which questions were asked in any given case. Alan Hess to maintain an electronic file of these "rev" levels.

Reports and photo negatives are to be maintained by EAA inspectors until such time as Ford requests these materials to be sent to Ford. EAA will retain no copies of these materials after that point in time.

3713 5350

1992-1995 TOWN CAR ELECTRICAL INSPECTIONS

FoSafe_1

CASE No	DATE COMPLETED	REPORT REV #	COMMENTS
N/A Alvarado	3/16/99	1.0	Ford caps may be present
1	3/23/99	2.0	Damaged(?) Lincoln [illegible] car. Car is spotless per Bassett and the owner is willing to sell it to Ford.
2	3/17/99	1.0	John Kowalar present at inspection. Severe heat melted aluminum hood. Could remove only cruise brake switch.
3N	3/22/99	2.0	MHTBA not present at inspection. Glen Bolles, All State Ins. rep, would not permit any parts to be removed or brake fluid samples to be taken. Note blown fuse service history that is included in the report.
15N			Difficulty was experienced in contacting the case representative, Michelle
16N			Tonna, at USAA to schedule an inspection. I called Michelle on Monday, 3/29. Jeff Houtpenn (888) 803-4798 from Elson Eng. will represent USAA. All scheduling is done by him. Jeff had recommended to USAA that no parts be
15N			permitted to be removed. I called Jeff on 3-30-99. He will be in Detroit for air bag training the week of April 5, but after I explained the importance of completing the inspection in a timely manner, he agreed to schedule the
15N	4/1/99	2.0	inspection for the next day, April 1. Jeff indicated that he would permit parts to be removed if he were provided information on the findings of the parts analysis. He also stated that he had inspected 6 or 7 similar cases.
16N	3/17/99	1.0	Owner requests not to call before Tuesday 3-16-99.
17N			Mike Sandella, (727) 712-6677 or pager (888) 880-3811, is the Nationwide Insurance investigator handling the inspection. I called Mike Monday, March 29. The inspection delay was due to a mobile home fire / homicide in the area. It
17N			was prioritized by Mike Olen from the Florida State Fire Marshall's office. Sandella, Olen, Doug Davidson from West & Whitmore, fire investigators, were all present with Dave Bassett (EAA) at the investigation. Although parts were
17N	3/31/99	2.0	not permitted to be removed, they may be available at a later date. Due to the limited severity of this incident, these parts could be of significant value. Sandella and Olen commented on having seen "about 50" similar cases.
30N			I called Bill Buckley April 1, 9:00 AM. He will be in Houston next week & not available until April 12. Following our discussion, Bill agreed to meet Dave Burnett to inspect the car at 8:00 AM Monday, April 5 before his flight to Houston.

3713 5351

1992-1995 TOWN CAR ELECTRICAL INSPECTIONS

Fo9a0a_1

8713 5952

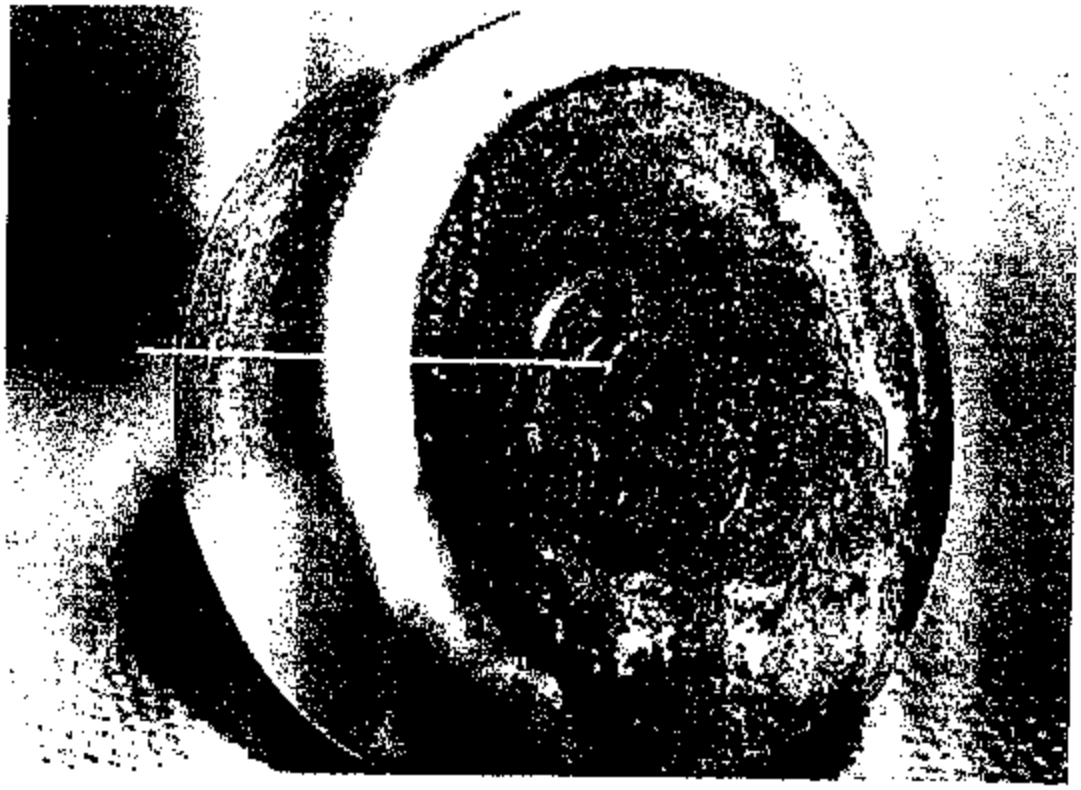

3713 5353

1992-1995 TOWN CAR CRUISE CONTROL BRAKE SWITCH INSPECTIONS

92-95 TC INSPECTIONS . XLS 3-15-99

CASE No	LOCATION	VIN	EAA SA	EAA NOTIFIED	OWNER	ADDRESS	TELEPHONE	CONTACT AND VEHICLE LOCATION	TELEPHONE	INSPEN DATE	STATUS	COMMENTS
MA Abraham ck	Memphis TN	[redacted]	Mullins	3-11-99 Abramcz	[redacted]	[redacted]	[redacted]	Schilling Lincoln-Mero 2908 Mendenhall Memphis TN	James Farris (901)363-1380	Thurs 3-18-99	Appt	Ford reps may be present
1	Naples FL	[redacted]	Burnett	3-12-99 PM	[redacted]	[redacted]	[redacted]	owner	Same	Tues AM 3-23-99		Domain(?) Linc-Merc repaired car. Car is avail only Mon & Tues AM
2	Aurora IL	[redacted]	Mullins	3-11-99 3:33PM	[redacted]	[redacted]	[redacted]	280 E Sullivan Aurora IL 60505	(630) 896-5300	Wednes 3-17-99	Complete 3-17-99	John Kessler must be present at inspection. He is NA 3-15/19-99. Severe heat melted aluminum hood. Could remove only cruise brake switch.
3N	Tyler TX	[redacted]	Martinez	3-11-99 3:18PM	[redacted]	[redacted]	[redacted]	Glen Bolton	(903) 526-2080	Monday 10 AM 3-22-99	Hold	On hold pending NHTSA rep availability
15N	Houston TX	[redacted]	Martinez	3-12-99 4:45PM	[redacted]	[redacted]	[redacted]	Insurance Auto Auction 12575 Hiram Clarke Dr Houston TX 77048	(713) 929-2611	Wednes 3-24-99		Reps from USAA & Blum Eng will witness insp & approve parts removal
16N	Davenport FL	[redacted]	Burnett	3-12-99 2:10PM	[redacted]	[redacted]	[redacted]	Same	Same	PM Noon 3-19-99		Owner requests not to call before Tuesday 3-16-99
17N	Ft Myers FL	[redacted]	Burnett	3-12-99 4:10PM	[redacted]	[redacted]	[redacted]	Keelpin Car Tops 1908 Custom Drive Ft Myers FL 33907	(941) 743-8520	Mon PM 3-22-99		Ron Stewart to be present at inspection
18												
19												
20												
21												
22												
23												
24												
25												

3713 5354

1992-1995 TOWN CAR CRUISE CONTROL BRAKE SWITCH INSPECTIONS

92-95 TC INSPECTIONS .XLS 3-18-99

Notes:

N suffix in a case number indicates that the case was supplied to Ford by NHTSA.

All reports are double copied and photos are triple copied and sent as follows:

1 copy of report and photos to Parsan

1 copy of report and 2 copies of photos to Joe Nanne

Sent by fastest means possible (overnight strongly desired)

All parts to be carefully packaged & sent to Ford Central Testing Lab, Department T118 with the following:

Sheet with VIN, date inspected, name, phone & fax of EAA SA who inspected the vehicle

and "If any questions, please contact Joe Nanne at (313) 390-6133 ". If you are having

difficulty contacting the EAA inspector immediately contact Alan Hass at EAA, phone (248) 643-3232 X148, fax (248) 642-4558.

Send via fastest means available (overnight strongly preferred)

To be addressed to "Department T118 - EAA Project # F092A"

When requested, EAA will provide additional copies of reports and/or photos. Contact Alan Hass at the numbers listed above.

EAA will schedule inspections and notify any Ford representative who has asked to attend.

Notification will be completed within one hour after establishing the inspection date and time.

If an insurance company or others assigned by Ford is delaying the inspection of an NHTSA case, EAA (Alan Hass) will immediately

contact Ray Nevi to help resolve the issue. Similar delays with non-NHTSA assigned cases will be immediately directed

to Joe Nanne for assistance in resolving delay issues.

Farveen Ansari will call Alan Hass regarding each case and will also send the questionnaire (with her comments added) to the

assigned EAA inspector's fax and also send a copy to Alan Hass by fax. Alan Hass will provide the name of the EAA

inspector who has been assigned to each case

Priority of cases is as follows: (1) NHTSA, (2)other most recent, (3) other older cases

Daily status report to be sent by Alan Hass by e-mail to Joe Nanne, Bill Abramczyk, Ray Nevi, fparsa@ford.com, mstevens@ford.com,

and forward@ford.com. The attached EXCEL file will be formatted at an EXCEL level which will enable all addressees

Questionnaire "rev" level to be added to each case. As questionnaire revisions are made this will aid in understanding which

questions were asked in any given case. Alan Hass to maintain an electronic file of these "rev" levels.

Reports and photo negatives are to be maintained by EAA inspectors until such time as Ford these materials to be sent to Ford.

EAA will retain no copies of these materials after that point in time.

3713 5365

ECONOLINE VS. TOWN CAR P/S

3713 5356

Steven Beringhause
Design Engineering Manager
Texas Instruments Incorporated
Attleboro, MA 02703

February 8, 1999

Fred,

As we discussed over the phone Friday, per your request we looked at the possibilities of adding a fuse in line with the pressure switch, however, we think a more appropriate solution might be to use a relay circuit (schematic attached). Our understanding of the application is that the brake pressure switch is a failsafe component to shut off the cruise control if the standard brake light switch fails. The brake switch therefore only needs to be powered when the cruise control is on. By placing a normally open relay in the circuit and only closing the relay when the cruise control is activated, the switch will only be powered when it needs to be, when the cruise control is enabled. If you are correct that the high current draw is the source of ignition a relay would be a better solution than an in line fuse because the relay prevents the high current situation from happening rather than reacting once it does occur. If you have any questions, please give me a call at 508-236-3378.

Regards,
Steven Beringhause

77P8-Molded Base

Entry No.	Rev No.	DATE of RIR	Dwg Size	VALUE IMPROVEMENT	Design Engr	FORD P/N	TI P/N	P/N 6651E-x	Material
1	A	[illegible]	Angle	Replaced [illegible] with [illegible] Celanex 4300	Steve Dillier	F2VC-9F924-AB F8LC-9F924-AA	77P8L3-1 77P8L3-2	2 (brown, #6) 1 (black, #1)	Celanex 4300 Celanex 4300
2	B	8-Jan-91	Angle	Celanex 4300 CN [illegible] Correct/clearly print view	Steve Dillier	F2VC-9F924-AB F8LC-9F924-AA	77P8L3-1 77P8L3-2	3(brown,#6) 1 (black #1)	Celanex 4300 Celanex 4300
3	C	4-May-[illegible]	Angle	Added (-5) GE Noryl GTX [illegible] CRM [illegible]	Steve Dillier	F2VC-9F924-AA 84DA-9F924-AA F3DC-9F924-AA	77P8L3-1 77P8L4-1 77P8L3-2	3 (natural #6) 3 (natural #6) 3 (natural #6)	GE Noryl GTX [illegible] GE Noryl GTX [illegible] GE Noryl GTX [illegible]
4	D	21-May-92	Angle	Added (-4 through -8) CRM [illegible] (-4, -7) GE Noryl GTX 830 (-5,-6,-8,-9) Celanex 4300	Steve Dillier	F2VC-9F924-AA F2VC-9F924-AB F3DC-9F924-AA F37A-9F924-CA F37A-3N924-AA F37A-3N924-AA 84BP-3N924-AA	77P8L3-1 77P8L3-1 77P8L3-2 77P8L3-8 77P8L3-2 77P8L3-3 77P8L11-2	3 (natural #6) 3 (brown #6) 3 (natural #6) 7 (red, #1) 6 (gray #1) 6 (gray #1) 5 (green #1)	GE Noryl GTX 830 Celanex 4300 GE Noryl GTX 830 GE Noryl GTX 830 Celanex 4300 Celanex 4300 GE Noryl GTX 830
5	E	8-Jul-93	Angle	Added -10 (GE Noryl GTX [illegible]) CRM [illegible]	Steve Dillier	F4AA-9F924-AA	77P8L3-2	10 (silk gray #1)	GE Noryl GTX 830
6	F	30-Dec-93	Angle	Clarified dimensions CRM [illegible]	Aziz Rahman				
7	G	1-May-95	Celanex	Dim stated CCC note CRM [illegible]	Chris Wagner				
8	H	20-May-96	Celanex	Note 4 Regrind was 30% CRM [illegible]	Chris Wagner				
9	J	15-Jan-97	CAD	Adjust 3 mach dim Added note CAD dwg CRM [illegible]	Di Hu				
10	K	15-Dec-97	CAD	Change dim places Remove 45-55 degree chamfer, CRM [illegible]	Di Hu				
11	L	23-Feb-[illegible]	CAD	Change .[illegible]/.045 chamfer to .[illegible]/.[illegible] CRM [illegible]	Di Hu				
12	M	1-Apr-[illegible]	CAD	Added -11 Material GE Noryl GTX [illegible] CRM [illegible]	Di Hu	XWHD-3N924-AA	87P8L3-5	11 (brown #1)	GE Noryl GTX 830
13	N	5-May-[illegible]	CAD	Added 12 Material Celanex 4300 ECN [illegible]	Di Hu	A[illegible]	87P8L3-6	12 (white #1)	Celanex 4300

3713 5356

1992-1995 TOWN CAR CRUISE CONTROL BRAKE SWITCH INSPECTIONS

92-95 TC INSPECTIONS . XLS 3-18-99

CASE No	LOCATION	VIN	EAA SA	EAA NOTIFIED	OWNER	ADDRESS	TELEPHONE	CONTACT AND VEHICLE LOCATION	TELEPHONE	INSPEN DATE	DATE COM-PLETED	REPORT REV #	COMMENTS
NA Abernathy	Memphis TN	[redacted]	Mullins	3-11-99 Abernathy	[redacted]	[redacted]	[redacted]	Schilling Lincoln-Merc 3300 Mendenhall Memphis TN	James Faris (901)365-1360	Thurs 3-18-99	3/18/99	1.0	Ford reps may be present
1	Naples FL	[redacted]	Burnett	3-12-99 PM	[redacted]	[redacted]	[redacted]	[redacted]	Same	Tues AM 3-23-99			Ostwalt(?) Lino-Merc repaired car. Car is avail only Mon & Tues AM
2	Aurora IL	[redacted]	Mullins	3-11-99 3:55PM	[redacted]	[redacted]	[redacted]	280 E Sullivan Aurora IL 60505	(630) 896-5300	Wednes 3-17-99	3/17/99	1.0	John Kessler present at inspection. Seven heat melted aluminum hood. Could remove only cruise brake switch.
3N	Tyler TX	[redacted]	Albritten	3-11-99 3:15PM	[redacted]	[redacted]	[redacted]	Glen Bolton	(903) 595-1980	Monday 10 AM 3-22-99			On hold pending NHTSA rep availability
16N	Houston TX	[redacted]	Albritten	3-12-99 4:45PM	[redacted]	[redacted]	[redacted]	Insurance Auto Auction 12575 Hiram Clarke Dr Houston TX 77045	(713) 829-2811	Wednes 3-24-99			Reps from USAA & Bloco Eng will witness insp & approve parts removal
18N	Davenport FL	[redacted]	Burnett	3-12-99 2:10PM	[redacted]	[redacted]	[redacted]	Same	Same	Fri Noon 3-19-99	3/17/99	1.0	Owner requests not to call before Tuesday 3-16-99.
17N	Ft Myers FL	[redacted]	Burnett	3-12-99 4:10PM	[redacted]	[redacted]	[redacted]	Custom Car Tops 1968 Custom Drive Ft Myers FL 33907	(941) 743-6620	Mon PM 3-22-99			Ron Stewart to be present at inspection
18													
19													
20													
21													
22													
23													
24													
25													

3713 6969

1992-1995 TOWN CAR CRUISE CONTROL BRAKE SWITCH INSPECTIONS

92-95 TC INSPECTIONS . XLS 3-18-99

Notes:

N suffix in a case number indicates that the case was supplied to Ford by NHTSA.

All reports are double copied and photos are triple copied and sent as follows:

1 copy of report and photos to Fareen

1 copy of report and 2 copies of photos to Joe Neme

Sent by fastest means possible (overnight strongly desired)

All parts to be carefully packaged & sent to Ford Central Testing Lab, Department T118 with the following:

Sheet with VIN, date inspected, name, phone & fax of EAA SA who inspected the vehicle and "If any questions, please contact Joe Neme at (313) 390-8133 ". If you are having difficulty contacting the EAA inspector immediately contact Alan Haas at EAA, phone (248) 642-3232 X146. fax (248) 642-4558.

Send via fastest means available (overnight strongly preferred)

To be addressed to "Department T118 - EAA Project # F002A"

When requested, EAA will provide additional copies of reports and/or photos. Contact Alan Haas at the numbers listed above.

EAA will schedule inspections and notify any Ford representative who has asked to attend.

Notification will be completed within one hour after establishing the inspection date and time.

If an insurance company or others assigned by them is delaying the inspection of an NHTSA case, EAA (Alan Haas) will immediately contact Ray Nevi to help resolve the issue. Similar delays with non-NHTSA assigned cases will be immediately directed to Joe Neme for assistance in resolving delay issues.

Fareen Ansari will call Alan Haas regarding each case and will also send the questionnaire (with her comments added) to the assigned EAA inspector"s fax and also send a copy to Alan Haas by fax. Alan Haas will provide the name of the EAA inspector who has been assigned to each case

Priority of cases is as follows: (1) NHTSA, (2)other most recent, (3) other older cases

Daily status report to be sent by Alan Haas by e-mail to Joe Neme, Bill Abramczyk, Ray Nevi, fporter@ford.com, tmasters@ford.com, and fansari1@ford.com. The attached EXCEL file will be formatted at an EXCEL level which will enable all addressees

Questionnaire "rev" level to be added to each case. As questionnaire revisions are made this will aid in understanding which questions were asked in any given case. Alan Haas to maintain an electronic file of these "rev" levels.

Reports and photo negatives are to be maintained by EAA inspectors until such time as Ford requests these materials to be sent to Ford. .EAA will retain no copies of these materials after that point in time.

3718 5960

1992-1995 TOWN CAR CRUISE CONTROL BRAKE SWITCH INSPECTIONS

92-95 TC INSPECTIONS , XLS 3-18-99

CASE No	LOCATION	VIN	EAA SA	EAA NOTI FIED	OWNER	ADDRESS	TELEPHONE	CONTACT AND VEHICLE LOCATION	TELEPHONE	SCHEDULE D INSPECTI ON DATE	CASE No
N/A Abramczk	Memphis TN	1LNLM81W8N[redacted]	Mullins	3-11-99 Abramczk	[redacted]			Schilling Lincoln-Merc 2680 Mendenhall Memphis TN	Janeta Farris (901)363-1380	3/18/99	N/A Abramczk
1	Naples FL	1LNLM81W8N[redacted]	Burnett	3-12-99 PM				owner	Same	3/23/99	1
2	Aurora IL	1LNLM82W6P[redacted]	Mullins	3-11-99 3:55PM				280 E Sullivan Aurora IL 60505	(630) 896-5300	3/17/99	2
3N	Tyler TX	1LNLM81W2N[redacted]	Albritton	3-11-99 3:15PM				Glen Bolton	(903) 566-1860	3/22/99	3N
15N	Houston TX	1LNLM82W4N[redacted]	Albritton	3-12-99 4:45PM				Insurance Auto Auction 12575 Hiram Clarke Dr Houston TX 77045		3/24/99	15N
16N	Davenport FL	1LNLM81W8N[redacted]	Burnett	3-12-99 2:10PM				Same	Same	3/19/99	16N
17N	Ft Myers FL	1LNLM82W6N[redacted]	Burnett	3-12-99 4:10PM				Kustom Car Tops 1955 Custom Drive Ft Myers FL 33907	(941) 743-6520	3/22/99	17N
18											18
19											19
20											20
21											21
22											22
23											23
24											24
25											25

3713 5361

1992-1995 TOWN CAR CRUISE CONTROL BRAKE SWITCH INSPECTIONS

92-95 TC INSPECTIONS . XLS 3-18-99

Notes:

N suffix in a case number indicates that the case was supplied to Ford by NHTSA.

All reports are double copied and photos are triple copied and sent as follows:

1 copy of report and photos to Farsen

1 copy of report and 2 copies of photos to Joe Nemo

Sent by fastest means possible (overnight strongly desired)

All parts to be carefully packaged & sent to Ford Central Testing Lab, Department T118 with the following:

Sheet with VIN, date inspected, name, phone & fax of EAA SA who inspected the vehicle

and "If any questions, please contact Joe Nemo at (313) 390-8133 ". If you are having

difficulty contacting the EAA Inspector immediately contact Alan Haas at EAA, phone (248) 642-3232 X146. fax (248) 642-4558.

Send via fastest means available (overnight strongly preferred)

To be addressed to "Department T118 - EAA Project # F003A"

When requested, EAA will provide additional copies of reports and/or photos. Contact Alan Haas at the numbers listed above.

EAA will schedule inspections and notify any Ford representative who has asked to attend.

Notification will be completed within one hour after establishing the inspection date and time.

If an insurance company or others assigned by them is delaying the inspection of an NHTSA case, EAA (Alan Haas) will immediately

contact Ray Nevi to help resolve the issue. Similar delays with non-NHTSA assigned cases will be immediately directed

to Joe Nemo for assistance in resolving delay issues.

Farees Ansari will call Alan Haas regarding each case and will also send the questionnaire (with her comments added) to the

assigned EAA Inspector's fax and also send a copy to Alan Haas by fax. Alan Haas will provide the name of the EAA

Inspector who has been assigned to each case

Priority of cases is as follows: (1) NHTSA, (2)other most recent, (3) other older cases

Daily status report to be sent by Alan Haas by e-mail to Joe Nemo, Bill Abramczyk, Ray Nevi, lpeder@ford.com, lmasters@ford.com,

and fansari1@ford.com. The attached EXCEL file will be formatted at an EXCEL level which will enable all addressees

Questionnaire "rev" level to be added to each case. As questionnaire revisions are made this will aid in understanding which

questions were asked in any given case. Alan Haas to maintain an electronic file of these "rev" levels.

Reports and photo negatives are to be maintained by EAA Inspectors until such time as Ford requests these materials to be sent to

Ford. EAA will retain no copies of these materials after that point in time.

3713 5362

1992-1995 TOWN CAR CRUISE CONTROL BRAKE SWITCH INSPECTIONS

92-95 TC INSPECTIONS .XLS 3-18-99

DATE COMPLETED	REPORT REV #	COMMENTS
3/16/99	1.0	Ford reps may be present
		Demarlo(?) Lino-Matic repaired car. Car is avail only Mon & Tues AM
3/17/99	1.0	John Keeler present at inspection. Severe heat melted aluminum hood. Could remove only cruise brake switch.
		On hold pending NHTSA rep availability
		Reps from USAA & Mason Eng will witness insp & approve parts removal
3/17/99	1.0	Owner requests not to call before Tuesday 3-16-99.
		Ron Stewart (NWI)& Florida fire marshall went to witness inspection. Expect FFM callback to reschedule inspection for later this week.

3713 5363

1992-1995 TOWN CAR CRUISE CONTROL BRAKE SWITCH INSPECTIONS

92-95 TC INSPECTIONS . XLS 3-15-99

9713 5964

May 28, 1999

Mr. Frederick J. Porter, Supervisor
E/E Systems Engineering
Building 5, Mail Drop 5011
20000 Rotunda Drive, Rm 3E004
Dearborn MI 48121-2053

Dear Fred:

I want to review our recent support of the Ford core team to assure we do not have any misunderstandings regarding our pressure switch performance, our continued contribution to the 'core' team, and our commitment to a quick conclusion.

For six months the Texas Instruments Automotive Sensors & Controls Team has been supporting the Ford Core Diagnostic Team with technical facts, data, and analysis regarding our brake pressure switch product applied in the Ford cruise control deactivation circuit.

A senior TI pressure switch engineer was in residence at Ford for three weeks to assist with switch related issues in the system diagnostic process. Senior TI leadership participation has also been involved in virtually every Ford Core Team meeting delivering facts, data, and technical support year-to-date '99.

We also investigated switch capability, and using agreed upon accelerated simulation life testing techniques, demonstrated the ability of the model year '92 & '93, Town Car speed control deactivation switches to consistently exceed "cycle life specification" of 500,000 pressure cycles. TI Weibull reports of pressure switches tested in 1999 conservatively demonstrate 95% reliability to 1 million cycles (with confidence intervals greater than 50%).

Additionally "success testing records" of some 665 ES units that were tested during the 1991 - 1992 (11/91 - 12/92) showed zero leakage at 500,000 cycles.

Conclusion to date: 1992 period switches met specification. 1999 switch meets or exceeds specification

We have developed and delivered a laboratory model of accelerated plastic base ignition of the switch resulting from fluid in the switch cavity coupled with application of constant power as designed in the speed control circuit. Theories from the model suggest that fluids in the switch cavity in the presence of

uninterrupted power could lead to a corrosion product formation which might create a plastic base ignition path.

Conclusion to date: Constant speed control power allows long term corrosion

In light of this laboratory model and the need for cruise system power only during vehicle operation, we suggest the system architecture of "key-on/off" based power be considered.

We have been open and forthright in our communications and delivery of information and we believe we have been instrumental in helping Ford address the underhood fire concern issue.

In this regard, we think it is appropriate at this point that our active participation in the diagnostic journey of the vintage 1992 product move towards a timely conclusion. Toward this end, we will continue to support the "core" team review of 1992 product history with targeted completion in July 1999.

We are preparing to fulfill your request for hosting a site visit, supporting campaign field return device analysis, and participating in robust system brainstorming sessions moving toward conclusion in July, as well as reviewing the optimization of our product line process controls.

Our prime focus at this time is in rapidly supplying Ford with 225,000 units in support of the field actions.

Regards,

Andrew C. McGuirk
QRA Manager
Texas Instruments

attachments: 1992 Testing History
TI 77PS Test synopsis
TI 77PS Investigation Flow Diagram

Brake Pressure Switch Questions:

Can BRAKE PRESSURE SWITCH function be removed from power feed circuit and placed in ground return circuit of the servo clutch?

At a minimum the following would be required:

SPEED CONTROL SERVO
Redesign the speed control electronic
1. New board layout
2. New MROM
3. New software strategy for deactivation switch function
4. Additional isolated ground circuit

Manufacturing plant equipment effected
1. Process equipment for new board layout
2. Test equipment for new deact switch strategy

Estimate 12 months minimum to develop and prove-out.

WIRING HARNESS(S)
Additional wiring circuit for ground circuit through deact switch. More than one harness maybe be effected. EESE would need to reply.

SERVICE TEST EQUIPMENT:
Field/service equipment would not working properly for the deactivation switch function.

FMEA CONSIDERATIONS:
With switching the power circuit, a wiring harness short to ground would make the speed control system inoperative.

With switching the ground circuit, a wiring harness short to ground would override the function of the deactivation switch.

Based on a minimum of 12 months to design and prove out required changes to the servo; this is not compatible with a near term implementation.

Can BRAKE PRESSURE SWITCH function be moved to the ground circuit of the speed control servo without any changes?

NO; Every time the deactivation switch is cycled, the speed control system would reset itself. The vehicle set speed memory would be lost. RESUME function would not work. Driver would have to press "ON" and "SET" to re-engage the speed control system instead of just pressing the "RESUME" or "SET".

Steve, below is a memo from Charlie Douglas to Fred Porter that was an early answer to the various brake p/s part number question....I have now added plastic type as a difference between switches as well as made position tab more prominent as it might be a confounder in the connector seal theory.....Andy McGuirk 3/18/99

Fred,

I believe that your list includes some service part numbers, older rev levels, as well as pre-production or prototype part numbers. Overall, including Ford Australia, there are eight different production parts. Differences from part to part are fairly minor and include: actuation calibration, release pressure, hexport style, position tab to locate connector, color (and possibly plastic material) of connector base, thread style, and snap noise associated with the pressure disc. The following matrix, helps summarize this information:

Part Number	Actuation	Release	Base/pos tab	Hexport	Thread	S or Q
F2VC 9F924 AB	90-160 (1)	20 min	Brown / pos 2	J512	3/8-24M	Snap
F6LC 9F924 AA	200-300 (2)	40 min	Black / pos 1	J512	3/8-24M	Snap
F2AC 9F924 AA	90-200 (3)	20 min	Natural / pos 2	J512	3/8-24M	Quiet
F5BA 9F924 AA	90-160 (4)	20 min	Grey / pos 1	J512	3/8-24M	Quiet
F3TA 9F924 CA	200-300 (5)	40 min	Red / pos 1	J512	3/8-24M	Snap
94DA 9F924 AA	90-160 (6)	20 min	Natural / pos 2	o-ring	M10x1.00M	Quiet
F3DC 9F924 AA	90-160 (7)	20 min	Natural / pos 2	Snubber	3/8-24M	Quiet
94JA 9F924 AB	90-160 (8)	20 min	Grey / pos 1	o-ring	3/8-24M	Quiet

Vehicle – Part Number Correlation

(1) Crown Vic, Grand Marquis, Mark, Town Car
(2) Econoline, Club Wagon
(3) Crown Vic, Grand Marquis, Mark, Town Car
(4) Whistar
(5) Bronco, F-Series, Ranger, Explorer, Navigator, Expedition, Econoline, Club Wagon
(6) Falcon
(7) SHO Taurus
(8) Capri

TI P/N Correlation to Above

(1) 77PSL2-1
(2) 77PSL2-3
(3) 77PSL3-1
(4) 77PSL3-2
(5) 77PSL3-3
(6) 77PSL4-1
(7) 77PSL5-2
(8) 77PSL6-1

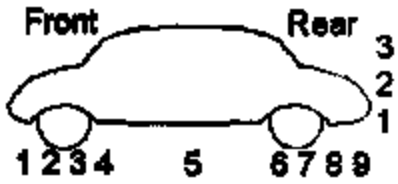

3713 5369

NAVIS Data for Panther Issue Cars Total Vehicles with VINS to get NAVIS was 39

	Totals	14	25	13	2	5	3	36
Last 8	Vehicle	Eng Off	Unk	Traction Control/ Police		Trailer Tow	Limo Pack	Speed Control
619372	Town Car	1						1
604875	Town Car		1	1		1		1
690114	Town Car	1		1		1		1
755129	Town Car		1	1				1
760932	Town Car	1		1				1
706640	Town Car		1			1		1
740870	Town Car		1	1				1
621654	Town Car		1					1
724816	Town Car		1	1				1
610944	Town Car	1						1
620732	Town Car		1					1
723288	Town Car	1		1				1
647474	Town Car	1		1		1		1
706679	Town Car		1				1	1
739739	Town Car	1						1
692079	Town Car		1					1
666042	Town Car	1						1
712706	Town Car		1				1	1
688947	Town Car		1					1
685683	Town Car		1				1	1
212161	CV	1						1
131914	CV		1	1		1		1
108193	CV		1					1
158104	CV		1	1				1
123674	CV		1					1
158418	CV		1					1
202884	CV		1		1			
226361	CV		1		1			
232881	CV		1	1				1
141388	CV		1					
602806	GM		1	1				1
726283	GM		1					1
728586	GM	1						1
619289	GM	1		1				1
660200	GM	1						1
746027	GM		1					1
727683	GM		1					1
727792	GM	1						1
606074	GM	1						1

39 VINS

3713 5370

F2VY-9F924-A Service Part Sales
as of 2/2/1998

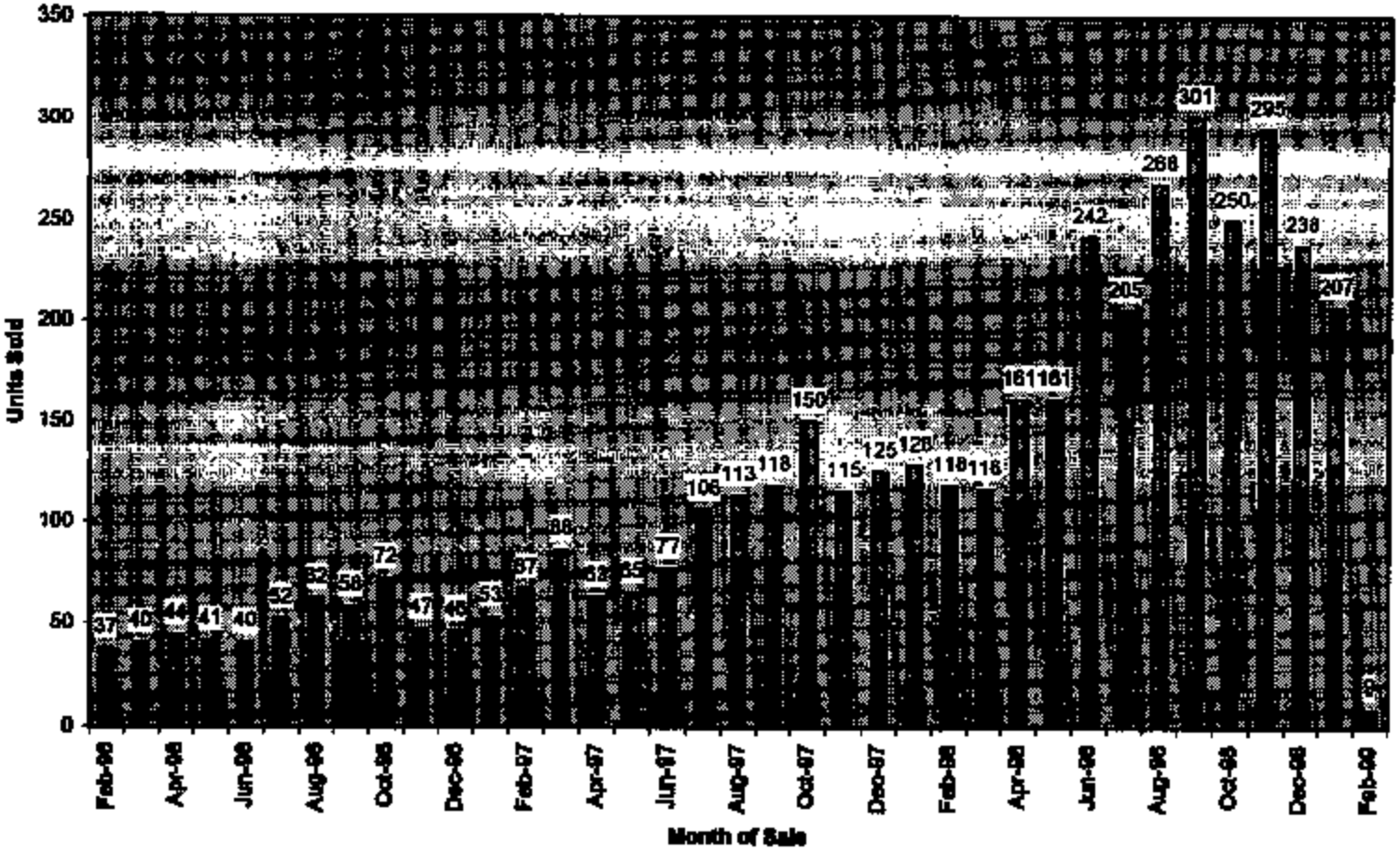

3713 5377

Month	Part Sales
Feb-96	37
Mar-96	40
Apr-96	44
May-96	41
Jun-96	40
Jul-96	52
Aug-96	62
Sep-96	58
Oct-96	72
Nov-96	47
Dec-96	46
Jan-97	53
Feb-97	67
Mar-97	86
Apr-97	63
May-97	65
Jun-97	77
Jul-97	106
Aug-97	113
Sep-97	116
Oct-97	150
Nov-97	116
Dec-97	125
Jan-98	128
Feb-98	118
Mar-98	116
Apr-98	161
May-98	161
Jun-98	242
Jul-98	206
Aug-98	268
Sep-98	301
Oct-98	250
Nov-98	295
Dec-98	238
Jan-99	207
Feb-99	9

3713 5376

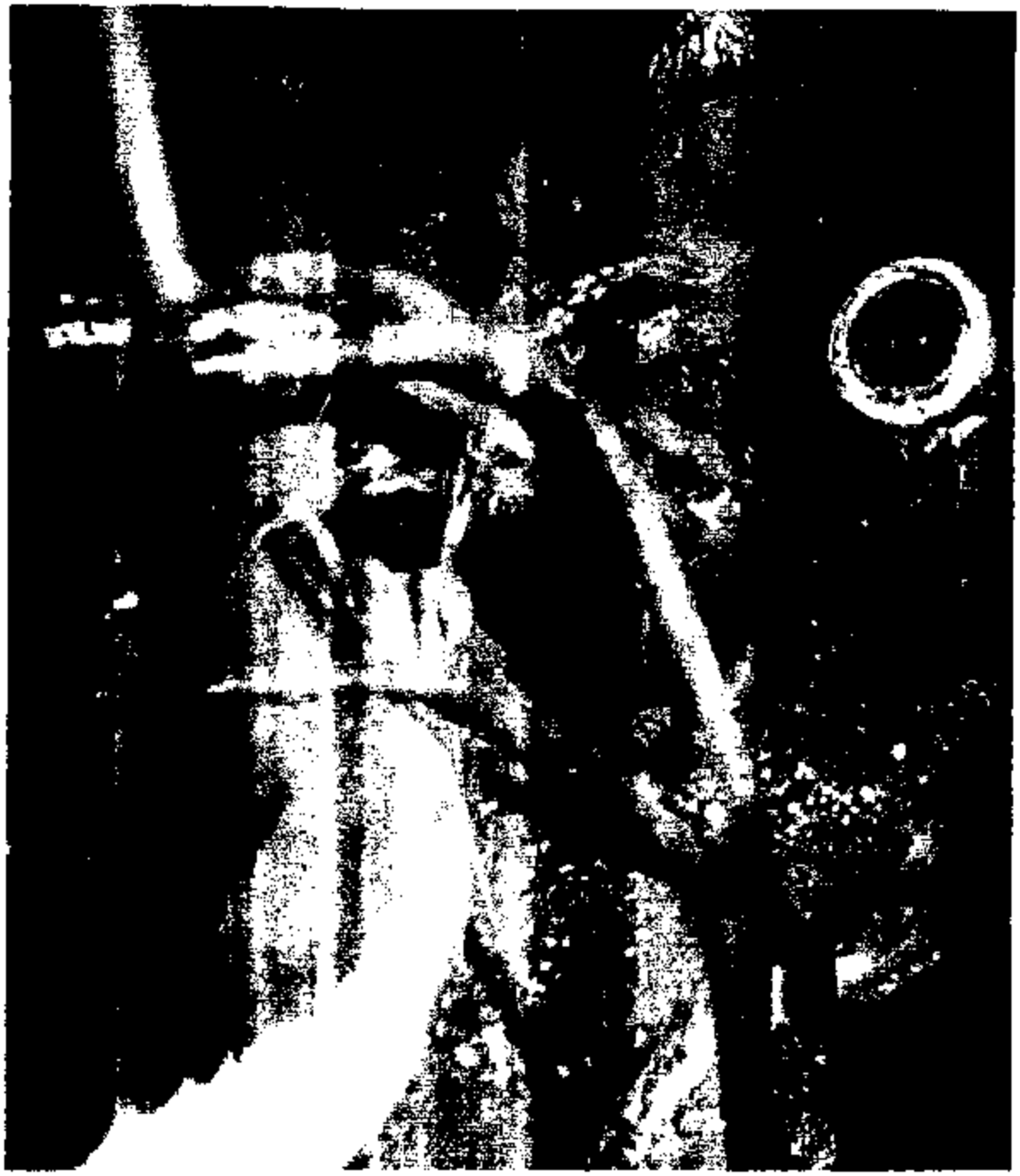

9F924 Hydraulic Applications

Vehicle	MY	Part Number	Pressure Engage	Pressure Release	Color	Key	Port	Threads		Material	Location	Orientation	Component
Bronco	94	F3TA 9F924 CA	200-300	40	Red	pos 1	J512	3/8-24M	Snap	Polyphenylene Oxide			
Capri	94	94JA 9F924 AB	90-160	20	Grey	pos 1	o-ring	3/8-24M	Quiet		322	180, 0	Prop Valve
Club Wagon		F8LC 9F924 AA	200-300	40	Black	pos 1	J512	3/8-24M	Snap				
Club Wagon		F3TA 9F924 CA	200-300	40	Red	pos 1	J512	3/8-24M	Snap	Polyphenylene Oxide	321	0, 0	Master Cylinder
Crown Victoria	92, 93	F2VC 9F924 AB	90-160	20	Brown	pos 2	J512	3/8-24M	Snap	Celanex 4300	311	45, 0	Prop Valve
Crown Victoria	957	F2AC 9F924 AA	90-200	20	Natural	pos 2	J512	3/8-24M	Quiet		311	45, 0	Prop Valve
Econoline	92, 93								Snap		211	0, 0	Brake Line
Econoline	94	F3TA 9F924 CA	200-300	40	Red	pos 1	J512	3/8-24M	Snap	Polyphenylene Oxide	321	0, 0	Master Cylinder
Econoline		F8LC 9F924 AA	200-300	40	Black	pos 1	J512	3/8-24M	Snap				
Expedition		F3TA 9F924 CA	200-300	40	Red	pos 1	J512	3/8-24M	Snap	Polyphenylene Oxide			
Explorer	95, 96, 97	F3TA 9F924 CA	200-300	40	Red	pos 1	J512	3/8-24M	Snap	Polyphenylene Oxide	321	0, 0	Master Cylinder
F-Series	94, 97	F3TA 9F924 CA	200-300	40	Red	pos 1	J512	3/8-24M	Snap	Polyphenylene Oxide	321	0, 0	Master Cylinder
Falcon		94DA 9F924 AA	90-160	20	Natural	pos 2	o-ring	M10x1.0M	Quiet				
Grand Marquis	92, 93	F2VC 9F924 AB	90-160	20	Brown	pos 2	J512	3/8-24M	Snap	Celanex 4300	311	45, 0	Prop Valve
Grand Marquis	957	F2AC 9F924 AA	90-200	20	Natural	pos 2	J512	3/8-24M	Quiet		311	45, 0	Prop Valve
Mark VIII	93, 94	F2VC 9F924 AB	90-160	20	Brown	pos 2	J512	3/8-24M	Snap	Celanex 4300	311	100, 0	Prop Valve
Mark VIII	95, 96	F2AC 9F924 AA	90-200	20	Natural	pos 2	J512	3/8-24M	Quiet		113	180, 0	Prop Valve
Navigator		F3TA 9F924 CA	200-300	40	Red	pos 1	J512	3/8-24M	Snap	Polyphenylene Oxide			
Ranger	95, 96, 97	F3TA 9F924 CA	200-300	40	Red	pos 1	J512	3/8-24M	Snap	Polyphenylene Oxide	321	0, 0	Master Cylinder
SHO Taurus		F3DC 9F924 AA	90-160	20	Natural	pos 2	Snubber	3/8-24M	Quiet				
Town Car	92, 93	F2VC 9F924 AB	90-160	20	Brown	pos 2	J512	3/8-24M	Snap	Celanex 4300	311	45, 0	Prop Valve
Town Car	957	F2AC 9F924 AA	90-200	20	Natural	pos 2	J512	3/8-24M	Quiet		311	45, 0	Prop Valve
Windstar		F68A 9F924 AA	90-160	20	Grey	pos 1	J512	3/8-24M	Quiet				

3713 5363

Vehicle Location

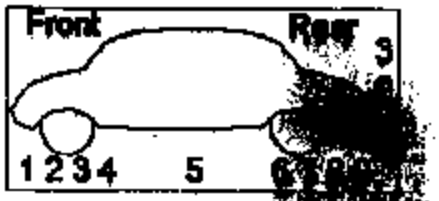

1 = Driver Side
2 = Center
3 = Passenger Side

321 = rear engine compartment, center of vehicle, on frame

Vehicle Orientation

(degrees from vertical), (degrees from forward)

3713 5364

#	PORT NUMBER	PTA	ACT	CNEC	S	RELEASE	TUR	R	RELEASE	VL	A	MT	A	IN:	CODE	NOTICE	OUT:	CODE	NOTICE	NRC		
436	F5BB 9F924	AA F5BB	9F924	AA	UEX1	100304	1	MB00E10540577000	R	P	R	96/02/27	2U	P	99	R	IN:	84P99A	MB00I10540703494	OUT:	84P99A	MB00E10540577000
437	F5BB 9F924	AA F5BB	9F924	AA	UEX1	100304	1	MB00E10540577000	R	P	R	96/02/27	2U	P	99	R	IN:	84P99A	MB00I10540703494	OUT:	84P99A	MB00E10540577000
443	F5BB 9F924	AB F5BB	9F924	AB	UEX1	100304	1	MB00I10540703484	H	P	R	96/12/21	2U	P	99	A	IN:	84P99A	MB00I10540703484	OUT:		
444	F5BB 9F924	AB F5BB	9F924	AB	UEX1	100304	1	MB00I10540703484	H	P	R	96/12/21	2U	P	99	A	IN:	84P99A	MB00I10540703484	OUT:		
445	F5BB 9F924	AB F5BB	9F924	AB	UEX1	100304	1	MB00I10540703494	S	P	R	96/01/05	2U	P	99	R	IN:	84P99A	MB00I10540703494	OUT:	84P99A	MB00I10540703494
446	F5BB 9F924	AB F5BB	9F924	AB	UEX1	100304	1	MB00I10540703494	R	P	R	96/01/08	2U	P	99	R	IN:	84P99A	MB00I10540703494	OUT:	84P99A	MB00I10540703494
502	F5DB 9F924	AA F5DB	9F924	AA	UEX1	100304	0	MB00E10329914065	H	P	R	97/08/18	2U	P	99		IN:	84P99A	UEA1I10631619053	OUT:		
503	F5DB 9F924	AA F5DB	9F924	AA	UEX1	100304	0	MB00E10785053001	R	P	R	97/12/15	2U	P	99	K	IN:	84P99A	UEA1I10631619053	OUT:	84P99A	MB00E10785053001
504	F5DB 9F924	AA F5DB	9F924	AA	UEX1	100304	0	MB00I10598492470	H	P	R	96/05/01	2U	P	99	A	IN:	84P99A	MB00I10598492470	OUT:		
505	F5DB 9F924	AA F5DB	9F924	AA	UEX1	100304	0	UEA1I10631619053	H	P	R	96/12/02	2U	P	99	A	IN:	84P99A	UEA1I10631619053	OUT:		
506	F5DB 9F924	AA F5DB	9F924	AA	UEX1	100304	0	UEA1I10631619053	H	P	R	96/12/02	2U	P	99	R	IN:	84P99A	MB00I10598492470	OUT:	84P99A	UEA1I10631619053
514	XF1T 9F924	AC XF1T	9F924	AC	UEX1	100304	0	UEX1E10911334002	R	P	R	96/12/08	2U	P	99	A	IN:	X84P99A	UEX1E10911334002	OUT:	X84P99A	UEX1E10911334002
517	XB93 9F924	AA XB93	9F924	AA	UEX1	31964	0	UEX1E10[illegible]84000	H	P	R	96/08/12	2U	P	99	A	IN:	X84P99A	UEX1E10[illegible]84000	OUT:		
516	XB93 9F924	AA XB93	9F924	AA	UEX1	31964	0	UEX1E10911334002	R	P	R	96/12/08	2U	P	99		IN:	X84P99A	UEX1E10911334000	OUT:		
518	F5JB 9F924	AA F5JB	9F924	AA	[illegible]	[illegible]	1	MB00I10540703494	H	P	R	96/01/24	[illegible]		99							
529	F5JB 9F924	AA F5JB	9F924	AA	UEX1	100304	1	UEA1F10539603000	H	P	R	98/03/07	2U		99							
339	F5BA 9F924	AA F5BA	9F924	AA	NL00	100304	0	NL00E10175371000	H	P	R	92/02/21	A3	P	95	A	IN:	84P95A	NL00E10175371000	OUT:		
340	F5BA 9F924	AA F5BA	9F924	AA	NL00	100304	0	NL00E10222093000	H	P	R	93/07/27	A3	P	95	R	IN:	84P95A	NL00E10175371000	OUT:	84P95A	NL00E10222093000
341	F5BA 9F924	AA F5BA	9F924	AA	[illegible]	[illegible]	[illegible]	[illegible]	[illegible]	[illegible]	[illegible]	[illegible]	[illegible]	[illegible]	[illegible]	[illegible]	[illegible]	[illegible]	[illegible]	[illegible]	[illegible]	[illegible]
343	F5BA 9F924	AB F5BA	9F924	AB	NL00	100304	0	NL00E10222093000	H	P	R	92/07/27	A3	P	95	A	IN:	84P95A	NL00E10222093000	OUT:		
344	F5BA 9F924	AB F5BA	9F924	AB	NL00	100304	0	NL00E10285451000	R	P	R	93/04/08	A3	P	95	R	IN:	84P95A	NL00E10222093000	OUT:	84P95A	NL00E10285451000
348	F5BA 9F924	AB F5BA	9A018	AA	NU00	100304	0	NU00E10526561001	H	S	R	95/07/12	A3	P	95	R	IN:	84P95A	NU00E10526561000	OUT:		
346	F5BA 9F924	AB F5BA	9A018	AA	NU00	100300	0	NU00E10526561001	R	S	R	97/05/03	A3	P	95	R	IN:	84P95A	NU00E10526561000	OUT:	X84P97A	NU00E10526561001
347	F5BA 9F924	AB F5BA	9A018	AA	NU00	100300	0	NU00E10568515000	R	S	R	95/12/08	A3	P	96	A	IN:	84P96A	NU00E10568515000	OUT:		
348	F5BA 9F924	AB F5BA	9A018	AA	NU00	100300	0	NU00E10568515000	R	S	R	96/12/06	A3	P	96	A	IN:	84P96A	NU00E10568515000	OUT:		
191	F3VC 9F924	AB F3DC	2B195	AA	NC00	60701	0	NC00E10138027000	H	P	R	91/08/09	DA	P	93	A	IN:	84P93A	NC00E10138027000	OUT:		
192	F3VC 9F924	AB F3DC	2B195	AA	NC00	60701	0	NC00E10156029001	H	P	R	92/02/26	DA	P	93		IN:	84P93A	NC00E10138027000	OUT:	84P96A	NC00I10152467008
194	F3VC 9F924	AB F3DC	2B195	AA	[illegible]	[illegible]	0	[illegible]	[illegible]	[illegible]	[illegible]	[illegible]	[illegible]	[illegible]	[illegible]	[illegible]	[illegible]	[illegible]	[illegible]	[illegible]	[illegible]	[illegible]
[illegible]	[illegible]	[illegible]	[illegible]	[illegible]	[illegible]	[illegible]	[illegible]	[illegible]	[illegible]	[illegible]	[illegible]	[illegible]	[illegible]	[illegible]	[illegible]	[illegible]	[illegible]	[illegible]	[illegible]	[illegible]	[illegible]	[illegible]
256	F3DC 9F924	AA F3DC	2B195	AC	NC00	60701	0	NC00E10079779033	H	P	R	93/03/05	DA	P	93		IN:	84P93A	NC00E10191024000	OUT:	84P96A	NC00E10191024000
257	F3DC 9F924	AA F3DC	2B195	AC	NC00	60701	0	NC00E10191024000	H	P	R	92/08/10	DA	P	93	A	IN:	84P93A	NC00E10191024000	OUT:	84P96A	NC00E10191024000
259	F3DC 9F924	AA F3DC	2B195	AC	NC00	60701	0	NC00E10229829000	H	P	R	92/09/01	DA	P	93		IN:	84P93A	NC00E10191024000	OUT:	84P96A	NC00E10191024000
261	F3DC 9F924	AA F3DC	2B195	AC	NC00	60701	0	NC00E10314615000	R	P	R	93/07/30	DA	P	93	R	IN:	84P93A	NC00E10191024000	OUT:	84P96A	NC00E10314615000
262	F3DC 9F924	AA F3DC	2B195	AA	NC00	60701	0	NC00E10314615000	R	P	R	93/07/30	DA	P	94	A	IN:	84P94A	NC00E10314615000	OUT:	84P96A	NC00E10314615000
215	F2VC 9F924	AB F4LC	2C320	AA	NC00	60403	0	NC00I10152467121	H	P	R	92/08/10	DC	P	96	A	IN:	84P96A	NC00I10152467121	OUT:		
217	F2VC 9F924	AB F4LC	2C320	AA	NC00	60403	0	NC00I10152467135	R	P	R	92/08/19	DC	P	96	A	IN:	84P96A	NC00I10152467121	OUT:	84P96A	NC00I10152467135
220	F2VC 9F924	AB F4LC	2C320	AA	NC00	60405	0	NC00E10248733000	H	P	R	92/11/30	DC	P	96	R	IN:	84P96A	NC00I10152467135	OUT:	84P96A	NC00E10248733000
222	F2VC 9F924	AB F4LC	2C320	AA	NC00	60405	0	NC00I10152467135	H	P	R	92/08/18	DC	P	96	A	IN:	84P96A	NC00I10152467135	OUT:		

#	NRC			
436	JSEAC		JAG	X200	1
437	JSPAD		JAG	X200	2
443	GTDAB	JSPAC	JAG	X200	3
444	GTDAB	JSPAD	JAG	X200	4
445	GTDAB	JSPAC	JAG	X200	5
446	GTDAB	JSPAD	JAG	X200	6
502			JAG	X200	7
503			JAG	X200	8
504	JSPAA		JAG	X200	9
505			JAG	X200	10
506	JSPAA		JAG	X200	11
514			JAG	X200	12
517			JAG	X200	13
516			JAG	X200	14
529			JAG	X200	15
339	GTDAB		NIH126		17
340	GTDAB		NIH126		18
341	[illegible]		[illegible]		[illegible]
343	GTDAB		NIH126		21
344	GTDAB		NIH126		22
348	GTDAA		NIH126		23
346	GTDAA		NIH126		24
347			NIH126		25
348			NIH126		26
191			TAUNUS		27
192			TAUNUS		28
194			TAUNUS		29
[illegible]					
256			TAUNUS		34
257			TAUNUS		35
259			TAUNUS		36
261			TAUNUS		37
262			TAUNUS		38
215	GTDAB		DN101		39
217	GTDAB		DN101		40
220	GTDAB		DN101		41
222	GTDAB		DN101		42

3713 5386

Sheet1

#	MAP NUMBER	PTA	ACT	CHSC	S RELEASE	FOR R RELEASE	VL A MT A IN:	CODE	NOTICE	OUT:	CODE	NOTICE	RPC		
334	F50B 9F924 AA	F50B 9F924	AA	MB00	100304	0 MB00E10262829051	H P R 95/11/02	DC P 96	IN: 84P96A	MB00E10152467845	OUT:			DN101	43
335	F50B 9F924 AA	F50B 9F924	AA	MB00	100304	0 MB00E10426424000	H P R 94/08/06	DC P 96 R	IN: 84P96A	MB00E10426424000	OUT:	84P96A	MB00E10426424000	DN101	44
336	F50B 9F924 AA	F50B 9F924	AA	MB00	100304	0 MB00E10152467845	H P R 95/08/30	DC P 96 R	IN: 84P96A	MB00E10207364841	OUT:	84P96A	MB00E10152467845	DN101	45
337	F50B 9F924 AA	F50B 9F924	AA	MB00	100304	0 MB00E10152467845	H P R 95/08/30	DC P 96 A	IN: 84P96A	MB00E10152467845	OUT:			GTDAB DN101	46
338	F50B 9F924 AA	F50B 9F924	AA	MB00	100304	0 [illegible]	[illegible]	[illegible]	[illegible]	[illegible]	[illegible]			[illegible] DN101	47
349	F6DB 9F924 AA	F6DB 9F924	AA	MB00	100304	0 MB00E10262829202	H P R 94/12/02	DC P 94	IN: 84P96A	MB00E10426424000	OUT:			GTDAB DN101	48
350	F6DB 9F924 AA	F6DB 9F924	AA	MB00	100304	0 MB00E10426424000	H P R 94/08/06	DC P 96 A	IN: 84P96A	MB00E10426424000	OUT:			GTDAB DN101	49
351	F6DB 9F924 AA	F6DB 9F924	AA	MB00	100304	0 MB00E10552303000	R P R 95/11/21	DC P 96 R	IN: 84P96A	MB00E10426424000	OUT:	X84P96A	MB00E10552303000	GTDAB DN101	50
352	F6DB 9F924 AA	F6DB 9F924	AA	MB00	100304	0 MB00E10552303000	H P R 95/11/21	DC P 96 A	IN: X84P96A	MB00E10552303000	OUT:			GTDAB DN101	51
353	F6DB 9F924 AA	F6DB 9F924	AA	MB00	100304	0 MB00E10641122030	H P R 98/01/26	DC P 96	IN: X84P96A	MB00E10552303000	OUT:	84P96A	MB00E10785853004	GTDAB DN101	52
354	F6DB 9F924 AA	F6DB 9F924	AA	MB00	100304	0 MB00E10641122030	H P R 98/03/26	DC P 99 A	IN: 84P96A	MB00E10641122030	OUT:	84P96A	MB00E10641122030	GTDAB DN101	53
355	F6DB 9F924 AA	F6DB 9F924	AA	MB00	100304	0 MB00E10736090000	H P R 97/04/30	DC P 96 X	IN: X84P96A	MB00E10552303000	OUT:		MB00E10736090000	GTDAB DN101	54
356	F6DB 9F924 AA	F6DB 9F924	AA	MB00	100304	0 MB00E10736090000	H P R 97/08/13	DC P 96	IN: X84P96A	MB00E10552303000	OUT:		MB00E10736090000	GTDAB DN101	55
357	F6DB 9F924 AA	F6DB 9F924	AA	MB00	100304	0 MB00E10781817002	H P R 97/10/03	DC P 94 R	IN: X84P96A	MB00E10552303000	OUT:	84P96A	MB00E10781817002	GTDAB DN101	56
[illegible]	F6DB 9F924 AA	F6DB 9F924	AA	MB00	100304	0 [illegible]	[illegible]	[illegible]	[illegible]	[illegible]	[illegible]		[illegible]	[illegible]	[illegible]
359	F6DB 9F924 AA	F6DB 9F924	AA	MB00	100304	0 MB00E10785853004	H P R 98/01/10	DC P 96 X	IN: X84P96A	MB00E10552303000	OUT:	84P96A	MB00E10785853004	GTDAB DN101	58
360	F6DB 9F924 AA	F6DB 9F924	AA	MB00	100304	0 MB00E10848007000	R P R 98/05/06	DC P 96	IN: X84P96A	MB00E10552303000	OUT:	84P96A	MB00E10848007000	GTDAB DN101	59
361	F6DB 9F924 AA	F6DB 9F924	AA	MB00	100304	0 MB00E10848007000	R P R 98/05/06	DC P 96 X	IN: X84P96A	MB00E10641122030	OUT:	84P96A	MB00E10848007000	GTDAB DN101	60
[illegible]	[illegible]	[illegible]	[illegible]	[illegible]	[illegible]	[illegible]	[illegible]	[illegible]	[illegible]	[illegible]	[illegible]	[illegible]	[illegible]	[illegible]	[illegible]
460	F6DB 9F924 AA	F6DB 9F924	AA	MB00	100304	0 MB00E10877874001	H P R 96/04/02	DC P 96 A	IN: 84P96A	MB00E10877874001	OUT:	84P96A	MB00E10877874001	GTDAB DN101	63
461	F6DB 9F924 AA	F6DB 9F924	AA	MB00	100304	0 MB00E10736090000	H P R 97/04/30	DC P 98 X	IN: 84P96A	MB00E10877874001	OUT:	84P96A	MB00E10736090000	GTDAB DN101	64
462	F6DB 9F924 AA	F6DB 9F924	AA	MB00	100304	0 MB00E10584342476	H P R 96/09/04	DC P 98	IN: 84P96A	MB00E10877874001	OUT:	84P96A	MB00E10877874001	GTDAB DN101	65
464	F6DB 9F924 AA	F6DB 9F924	AA	MB00	100304	1 MB00E10754965047	H P R 97/09/23	DC P 86 A	IN: CPFYA	MB00E10754965047	OUT:			GTDAB DN101	66
465	F6DB 9F924 AA	F6DB 9F924	AA	MB00	100304	1 MB00E10781817002	H P R 97/10/09	DC P 00 R	IN: CPFYA	MB00E10754965047	OUT:	84PYA	MB00E10781817002	GTDAB DN101	67
466	F6DB 9F924 AA	F6DB 9F924	AA	MB00	100304	1 MB00E10781817005	H P R 97/10/10	DC P 00 X	IN: CPFYA	MB00E10754965047	OUT:	CPFYA	MB00E10781817005	GTDAB DN101	68
511	XF1T 9F924 AC	XF1T 9F924	AC	MB00	100304	0 MB00E10907689000	R P R 98/11/17	DC P 99 A	IN: X84P96A	MB00E10907689000	OUT:	84PYA	MB00E10907689000	GTDAB DN101	69
354	F6DB 9F924 AB	F6DB 9F924	AB	MB00	100304	0 MB00E10781817002	H P R 97/10/08	DC P 00 A	IN: CPFYA	MB00E10781817002	OUT:			GTDAB DI96	70
[illegible]	[illegible]	[illegible]	[illegible]	[illegible]	[illegible]	[illegible]	[illegible]	[illegible]	[illegible]	[illegible]	[illegible]	[illegible]	[illegible]	[illegible]	[illegible]
[illegible]	[illegible]	[illegible]	[illegible]	[illegible]	[illegible]	[illegible]	[illegible]	[illegible]	[illegible]	[illegible]	[illegible]			[illegible]	[illegible]
193	F2VC 9F924 AB	F3DC 2B195	AA	MC00	60701	0 MC00E10156020001	H P R 92/02/24	DM P 94 A	IN: 84P96A	MC00E10156020001	OUT:	84P96A	MC00E10156020001	SABLE	76
198	F2VC 9F924 AB	F3DC 2B195	AA	MC00	60701	0 MC00E10203166000	R P R 92/04/14	DM P 94 R	IN: 84P96A	MC00E10203166000	OUT:	84P96A	MC00E10203166000	SABLE	77
251	F3DC 9F924 AA	F3DC 2B195	AB	MC00	60701	0 MC00E10191024000	R P R 92/04/10	DM P 94 R	IN: 84P96A	MC00E10203166000	OUT:	84P96A	MC00E10191024000	SABLE	78
252	F3DC 9F924 AA	F3DC 2B195	AB	MC00	60701	0 MC00E10203166000	R P R 92/04/14	DM P 94 A	IN: 84P96A	MC00E10203166000	OUT:	84P96A	MC00E10203166000	SABLE	79
258	F3DC 9F924 AA	F3DC 2B195	AC	MC00	60701	0 MC00E10079779030	H P R 92/08/27	DM P 94	IN: 84P96A	MC00E10191024000	OUT:	84P96A	MC00E10191024000	SABLE	80
259	F3DC 9F924 AA	F3DC 2B195	AC	MC00	60701	0 MC00E10191024000	H P R 92/04/10	DM P 94 A	IN: 84P96A	MC00E10191024000	OUT:	84P96A	MC00E10191024000	SABLE	81
260	F3DC 9F924 AA	F3DC 2B195	AC	MC00	60701	0 MC00E10229529000	H P R 92/09/01	DM P 94 X	IN: 84P96A	MC00E10191024000	OUT:	84P96A	MC00E10229529000	SABLE	82
263	F3YA 9F924 AA	F7DA 2A032	CR1	ML00	60601	0 ML00E10209377000	H P R 93/04/21	E4 U 97 A	IN: 84P97A	ML00E10209377000	OUT:			D2RAB GTDAA	VM127 83
264	F3YA 9F924 AA	F7DA 2A032	CR1	ML00	60601	0 ML00E10209377000	H P R 93/04/21	E4 U 97 A	IN: 84P97A	ML00E10209377000	OUT:			D2RAC GTDAA	VM127 84

3713 5987

#	PART NUMBER			FLA		ACT	CMMC	#	RELEASE	FIN	R	RELEASE	VL	A	MY	A	IN:	CODE	NOTICE	OUT:	CODE	NOTICE	MFC			
265	FJTA	9F924	AA	F7UA	2A032	CA1	NL00	60001	0	NL00I10388934000	R	P	R	94/10/27	E4	U	97	R	IN:	84P97A	NL00I10209377000	OUT:	84P97A	NL00I10388934000	D2AAB	GTDAA	VN127	85
266	FJTA	9F924	AA	F7UA	2A032	CA1	NL00	60001	0	NL00I10388934000	R	P	R	94/10/27	E4	U	97	R	IN:	84P97A	NL00I10209377000	OUT:	84P97A	NL00I10388934000	D2AAC	GTDAA	VN127	86
267	FJTA	9F924	AA	F7UA	2A032	DA	NL00	60001	0	NL00E10534123001	R	P	R	95/07/13	E4	P	97	R	IN:	84P97A	NL00I10459667001	OUT:	84P97A	NL00E10534123001	D2AAC	GTDAB	VN127	87
268	FJTA	9F924	AA	F7UA	2A032	DA	NL00	60001	0	NL00E10534123001	R	P	R	95/07/13	E4	P	97	R	IN:	84P97A	NL00I10459667001	OUT:	84P97A	NL00E10534123001	D2AAB	GTDAB	VN127	88
[illegible]	[illegible]	[illegible]	[illegible]	[illegible]	[illegible]	[illegible]	[illegible]	[illegible]	[illegible]	[illegible]	[illegible]	[illegible]	[illegible]	[illegible]	[illegible]	[illegible]	[illegible]	[illegible]	[illegible]	[illegible]	[illegible]	OUT:			[illegible]	[illegible]	VN127	[illegible]
270	FJTA	9F924	AA	F7UA	2A032	DA	NL00	60001	0	NL00I10489667001	R	P	R	94/12/23	E4	P	97	A	IN:	84P97A	NL00I10459667001	OUT:			D2AAB	GTDAB	VN127	90
271	FJTA	9F924	AA	F7UA	2A032	DA1	NL00	60001	0	NL00I10388934000	R	P	R	94/10/27	E4	U	97	A	IN:	84P97A	NL00I10388934000	OUT:			D2AAC	GTDAB	VN127	91
272	FJTA	9F924	AA	F7UA	2A032	DA1	NL00	60001	0	NL00I10388934000	R	P	R	94/10/27	E4	U	97	A	IN:	84P97A	NL00I10388934000	OUT:			D2AAB	GTDAB	VN127	92
273	FJTA	9F924	AA	F7UA	2A032	DA1	NL00	60001	0	NL00I10459667000	R	P	R	94/12/23	E4	U	97	R	IN:	84P97A	NL00I10388934000	OUT:	84P97A	NL00I10459667000	D2AAC	GTDAB	VN127	93
274	FJTA	9F924	AA	F7UA	2A032	DA1	NL00	60001	0	NL00I10459667000	R	P	R	94/12/23	E4	U	97	R	IN:	84P97A	NL00I10388934000	OUT:	84P97A	NL00I10459667000	D2AAB	GTDAB	VN127	94
275	FJTA	9F924	AA	F7UA	2A032	DA2	NL00	60001	0	NL00I10459667000	R	P	R	94/12/23	E4	U	97	A	IN:	84P97A	NL00I10459667000	OUT:			D2AAC	GTDAB	VN127	95
276	FJTA	9F924	AA	F7UA	2A032	DA2	NL00	60001	0	NL00I10459667000	R	P	R	94/12/23	E4	U	97	A	IN:	84P97A	NL00I10459667000	OUT:			D2AAB	GTDAB	VN127	96
277	FJTA	9F924	AA	F7UA	2A032	DA2	NL00	60001	0	NL00I10459667001	R	P	R	94/12/23	E4	U	97	R	IN:	84P97A	NL00I10459667000	OUT:	84P97A	NL00I10459667001	D2AAC	GTDAB	VN127	97
[illegible]	FJTA	9F924	AA	F7UA	[illegible]	DA2	NL00	60001	0	[illegible]	R	P	R	94/12/23	E4	U	97	R	IN:	84P97A	[illegible]	OUT:	84P97A	[illegible]	D2AAB	GTDAB	VN127	98
[illegible]	[illegible]	[illegible]	[illegible]	[illegible]	[illegible]	[illegible]	[illegible]	[illegible]	[illegible]	[illegible]	[illegible]	[illegible]	[illegible]	[illegible]	[illegible]	[illegible]	[illegible]	[illegible]	[illegible]	[illegible]	[illegible]	OUT:			[illegible]	[illegible]	[illegible]	[illegible]
280	FJTA	9F924	AA	F7UA	2A032	DB	NL00	60001	0	NL00E10534123000	R	P	R	95/07/13	E4	P	97	A	IN:	84P97A	NL00E10534123000	OUT:			D2AAB	GTDAB	VN127	100
281	FJTA	9F924	AA	F7UA	2A032	DB	NL00	60001	0	NL00E10575067000	R	P	R	96/01/06	E4	P	97	R	IN:	84P97A	NL00E10534123000	OUT:	84P97A	NL00E10575067000	D2AAC	GTDAB	VN127	101
[illegible]	FJTA	9F924	AA	F7UA	[illegible]	DB	NL00	60001	0	[illegible]	R	P	R	96/01/06	E4	[illegible]	97	R	IN:	84P97A	[illegible]	OUT:	84P97A	[illegible]	D2AAB	GTDAB	VN127	102
[illegible]	[illegible]	[illegible]	[illegible]	[illegible]	[illegible]	[illegible]	[illegible]	[illegible]	[illegible]	[illegible]	[illegible]	[illegible]	[illegible]	[illegible]	[illegible]	[illegible]	[illegible]	[illegible]	[illegible]	[illegible]	[illegible]	[illegible]	[illegible]	[illegible]	[illegible]	[illegible]	[illegible]	[illegible]
[illegible]	[illegible]	[illegible]	[illegible]	[illegible]	[illegible]	[illegible]	[illegible]	[illegible]	[illegible]	[illegible]	[illegible]	[illegible]	[illegible]	[illegible]	[illegible]	[illegible]	[illegible]	[illegible]	[illegible]	[illegible]	[illegible]	[illegible]	[illegible]	[illegible]	[illegible]	[illegible]	[illegible]	[illegible]
285	FJTA	9F924	AA	F7UA	2A032	DB1	NL00	60001	0	NL00E10534123001	R	P	R	95/07/13	E4	U	97	A	IN:	84P97A	NL00E10534123001	OUT:			D2AAC	GTDAB	VN127	105
286	FJTA	9F924	AA	F7UA	2A032	DB1	NL00	60001	0	NL00E10534123001	R	P	R	95/07/13	E4	U	97	A	IN:	84P97A	NL00E10534123001	OUT:			D2AAB	GTDAB	VN127	106
287	FJTA	9F924	AA	F7UA	2A032	DC	NL00	60001	0	NL00E00093603000	R	P	R	96/01/30	E4	P	97		IN:	84P97A	NL00E10575067000	OUT:			D2AAC	GTDAB	VN127	107
288	FJTA	9F924	AA	F7UA	2A032	DC	NL00	60001	0	NL00E00093603000	R	P	R	96/01/30	E4	P	97		IN:	84P97A	NL00E10575067000	OUT:			D2AAB	GTDAB	VN127	108
289	FJTA	9F924	AA	F7UA	2A032	DC	NL00	60001	0	NL00E10575067000	R	P	R	96/01/06	E4	P	97	A	IN:	84P97A	NL00E10575067000	OUT:			ZAAC	GTDAB	VN127	109
290	FJTA	9F924	AA	F7UA	2A032	DC	NL00	60001	0	NL00E10575067000	R	P	R	96/01/06	E4	P	97	A	IN:	84P97A	NL00E10575067000	OUT:			D2AAB	GTDAB	VN127	110
291	FJTA	9F924	AA	F7UA	2A032	DC	NL00	60001	0	NL00E10586144001	R	P	R	96/02/14	E4	P	97		IN:	84P97A	NL00E10575067000	OUT:			D2AAC	GTDAB	VN127	111
292	FJTA	9F924	AA	F7UA	2A032	DC	NL00	60001	0	NL00E10586144001	R	P	R	96/02/14	E4	P	97		IN:	84P97A	NL00E10575067000	OUT:			D2AAB	GTDAB	VN127	112
[illegible]	[illegible]	[illegible]	[illegible]	[illegible]	[illegible]	[illegible]	[illegible]	[illegible]	[illegible]	[illegible]	[illegible]	[illegible]	[illegible]	[illegible]	[illegible]	[illegible]	[illegible]	[illegible]	[illegible]	[illegible]	[illegible]	OUT:			[illegible]	[illegible]	[illegible]	[illegible]
[illegible]	[illegible]	[illegible]	[illegible]	[illegible]	[illegible]	[illegible]	[illegible]	[illegible]	[illegible]	[illegible]	[illegible]	[illegible]	[illegible]	[illegible]	[illegible]	[illegible]	[illegible]	[illegible]	[illegible]	[illegible]	[illegible]	[illegible]			[illegible]	[illegible]	[illegible]	[illegible]
[illegible]	[illegible]	[illegible]	[illegible]	[illegible]	[illegible]	[illegible]	[illegible]	[illegible]	[illegible]	[illegible]	[illegible]	[illegible]	[illegible]	[illegible]	[illegible]	[illegible]	[illegible]	[illegible]	[illegible]	[illegible]	[illegible]	[illegible]	[illegible]	[illegible]	[illegible]	[illegible]	[illegible]	
[illegible]	[illegible]	[illegible]	[illegible]	[illegible]	[illegible]	[illegible]	[illegible]	[illegible]	[illegible]	[illegible]	[illegible]	[illegible]	[illegible]	[illegible]	[illegible]	[illegible]	[illegible]	[illegible]	[illegible]	[illegible]	[illegible]	[illegible]			[illegible]	[illegible]	[illegible]	[illegible]
298	FJTA	9F924	AA	F7UA	2A032	DD	NL00	60001	0	NL00E10657412000	R	P	R	96/10/08	E4	P	97		IN:	J4P97A	NL00E10657412001	OUT:			D2AAB	GTDAB	VN127	118
299	FJTA	9F924	AA	F7UA	2A032	DD	NL00	60001	0	NL00E10657412001	R	P	R	96/09/10	E4	P	97	A	IN:	J4P97A	NL00E10657412001	OUT:			D2AAC	GTDAB	VN127	119
300	FJTA	9F924	AA	F7UA	2A032	DD	NL00	60001	0	NL00E10657412001	R	P	R	96/09/10	E4	P	97	A	IN:	J4P97A	NL00E10657412001	OUT:			D2AAB	GTDAB	VN127	120
301	FJTA	9F924	AA	F7UA	2A032	DD	NL00	60001	0	NL00E10719091000	R	P	R	97/02/05	E4	P	97	R	IN:	J4P97A	NL00E10657412001	OUT:	94P99A	NL00E10719091000	D2AAC	GTDAB	VN127	121
302	FJTA	9F924	AA	F7UA	2A032	DD	NL00	60001	0	NL00E10719091000	R	P	R	97/02/06	E4	P	97	R	IN:	J4P97A	NL00E10657412001	OUT:	94P99A	NL00E10719091000	D2AAB	GTDAB	VN127	122
303	FJTA	9F924	AA	F7UA	2A032	EA1	NL00	60001	0	NL00I10388934000	R	P	R	94/10/27	E4	U	97	A	IN:	84P97A	NL00I10388934000	OUT:			D2AAB	GTDAA	VN127	123
304	FJTA	9F924	AA	F7UA	2A032	EA1	NL00	60001	0	NL00I10388934000	R	P	R	94/10/27	E4	U	97	A	IN:	84P97A	NL00I10388934000	OUT:			D2AAC	GTDAA	VN127	124
305	FJTA	9F924	AA	F7UA	2A032	EA1	NL00	60001	0	NL00I10459667000	R	P	R	94/12/23	E4	U	97	R	IN:	84P97A	NL00I10388934000	OUT:	84P97A	NL00I10459667000	D2AAB	GTDAA	VN127	125
306	FJTA	9F924	AA	F7UA	2A032	EA1	NL00	60001	0	NL00I10459667000	R	P	R	94/12/23	E4	U	97	R	IN:	84P97A	NL00I10388934000	OUT:	84P97A	NL00I10459667000	D2AAC	GTDAA	VN127	126

3713 5988

#	PART NUMBER			PIA		ACT	CPSC	S	RELEASE	FUN	R	RELEASE	VL	A	NT	A	IN:	CODE	NOTICE	OUT:	CODE	NOTICE	MTC			
307	F3TA	9F924	AA	F7UA	2A032	EA2	ML00	60601	0	ML00Z10459867000	H	P	R	94/12/23	E4	U	97	A	IN:	84F97A	ML00Z10459867000	OUT:				D2AAC	GTDAA	VW127	127
308	F3TA	9F924	AA	F7UA	2A032	EA2	ML00	60601	0	ML00Z10459867000	H	P	R	94/12/23	E4	U	97	A	IN:	84F97A	ML00Z10459867000	OUT:				D2AAC	GTDAA	VW127	128
309	F3TA	9F924	AA	F7UA	2A032	EA2	ML00	60601	0	ML00Z10459867001	R	P	R	94/12/23	E4	U	97	R	IN:	84F97A	ML00Z10459867000	OUT:	84F97A	ML00Z10459867001		D2AAC	GTDAA	VW127	129
310	F3TA	9F924	AA	F7UA	2A032	EA2	ML00	60601	0	ML00Z10459867001	H	P	R	94/12/23	E4	U	97	R	IN:	84F97A	ML00Z10459867000	OUT:	84F97A	ML00Z10459867001		D2AAC	GTDAA	VW127	130
311	[illegible]	[illegible]	[illegible]	[illegible]	[illegible]	[illegible]	[illegible]	[illegible]	[illegible]	[illegible]	[illegible]	[illegible]	[illegible]	[illegible]	[illegible]	[illegible]	[illegible]	[illegible]	[illegible]	[illegible]	[illegible]	[illegible]	[illegible]	[illegible]	[illegible]	[illegible]	[illegible]	[illegible]	[illegible]
312	F3TA	9F924	AA	F7UA	2C156	NA	ML00	60601	0	ML00Z10459867001	H	P	R	94/12/23	E4	U	97	A	IN:	84F97A	ML00Z10459867001	OUT:				GTDAA		VW127	132
313	F3TA	9F924	AA	F7UA	2C156	NB	ML00	60601	0	ML00Z10534123000	H	P	R	96/09/09	E4	P	97	A	IN:	84F97A	ML00Z10534123000	OUT:				GTDAA		VW127	133
314	F3TA	9F924	AA	F7UA	2C156	NB	ML00	60601	0	ML00Z10575067000	R	P	R	96/01/06	E4	U	97	R	IN:	84F97A	ML00Z10534123000	OUT:	84F97A	ML00Z10575067000		GTDAA		VW127	134
315	F3TA	9F924	AA	F7UA	2C156	NB1	ML00	60601	0	ML00Z10534123000	R	P	R	96/09/09	E4	U	97	R	IN:	84F97A	ML00Z10534123001	OUT:	84F97A	ML00Z10534123000		GTDAA		VW127	135
316	F3TA	9F924	AA	F7UA	2C156	NB1	ML00	60601	0	ML00Z10534123001	H	P	R	96/07/13	E4	U	97	A	IN:	84F97A	ML00Z10534123001	OUT:				GTDAA		VW127	136
317	F3TA	9F924	AA	F7UA	2C156	NC	ML00	60601	0	ML00Z10575067000	H	P	R	96/01/30	E4	P	97		IN:	84F97A	ML00Z10575067000	OUT:				GTDAA		VW127	137
318	F3TA	9F924	AA	F7UA	2C156	NC	ML00	60601	0	ML00Z10575067000	H	P	R	96/01/04	E4	P	97	A	IN:	84F97A	ML00Z10575067000	OUT:				GTDAA		VW127	138
319	F3TA	9F924	AA	F7UA	2C156	NC	ML00	60601	0	ML00Z10584144041	H	P	R	96/04/15	E4	P	97		IN:	84F97A	ML00Z10575067000	OUT:				GTDAA		VW127	139
[illegible]	[illegible]	[illegible]	[illegible]	[illegible]	[illegible]	[illegible]	[illegible]	[illegible]	[illegible]	[illegible]	[illegible]	[illegible]	[illegible]	[illegible]	[illegible]	[illegible]	[illegible]	[illegible]	[illegible]	[illegible]	[illegible]	[illegible]	[illegible]	[illegible]	[illegible]	[illegible]	[illegible]	[illegible]	[illegible]
321	F3TA	9F924	AA	F7UA	2C156	ND	ML00	60601	0	ML00Z10657412001	H	P	R	96/09/10	E4	P	97	A	IN:	84F97A	ML00Z10657412001	OUT:				GTDAA		VW127	142
322	F3TA	9F924	AA	F7UA	2C156	ND	ML00	60601	0	ML00Z10767252000	R	P	R	97/05/15	E4	P	97	R	IN:	84F97A	ML00Z10657412001	OUT:	84F98A	ML00Z10767252000		GTDAA		VW127	143
323	F3TA	9F924	AA	F7UA	[illegible]	ND	ML00	60601	0	ML00Z10735569005	H	P	R	97/07/24	E4	P	97	R	IN:	84F97A	ML00Z10657412001	OUT:	84F98A	ML00Z10735569005		GTDAA		VW127	144
[illegible]	[illegible]	[illegible]	[illegible]	[illegible]	[illegible]	[illegible]	[illegible]	[illegible]	[illegible]	[illegible]	[illegible]	[illegible]	[illegible]	[illegible]	[illegible]	[illegible]	[illegible]	[illegible]	[illegible]	[illegible]	[illegible]	[illegible]	[illegible]	[illegible]	[illegible]	[illegible]	[illegible]	[illegible]	[illegible]
6	F2AC	9F924	AA	F2AC	2C120	CA	MC00	60605	0	MC00Z10361505000	H	P	R	93/12/17	FB	P	95	A	IN:	84F98A	MC00Z10361505000	OUT:				FEFAA	GTDAA	CROMM	VIC	147
9	F2AC	9F924	AA	F2AC	2C120	EB	MC00	60605	0	MC00Z10537002001	R	P	R	95/10/27	FB	P	95	R	IN:	84F98A	MC00Z10361505000	OUT:	84F98A	MC00Z10537002001		FEFAA	GTDAA	CROMM	VIC	148
29	F2VC	9F924	AA	F2AC	2C120	CA	MC00	60605	0	MC00Z10028915000	H	P	R	90/08/17	FB	P	92	A	IN:	X64F92A	MC00Z10028915000	OUT:				FEFAA	GTDAA	CROMM	VIC	149
31	F2VC	9F924	AA	F2AC	2C120	CA	MC00	60605	0	MC00Z10028915001	H	P	R	90/08/23	FB	P	92	A	IN:	84F92C	MC00Z10028915001	OUT:				FEFAA	GTDAA	CROMM	VIC	150
32	F2VC	9F924	AA	F2AC	2C120	CA	MC00	60605	0	MC00Z10028915001	H	P	R	90/08/23	FB	P	92	R	IN:	X64F92A	MC00Z10028915000	OUT:	X64F92A	MC00Z10028915001		FEFAA	GTDAA	CROMM	VIC	151
38	F2VC	9F924	AA	F2AC	2C120	CA	MC00	60605	0	MC00Z10112000000	H	P	R	91/01/18	FB	P	92		IN:	84F92C	MC00Z10028915001	OUT:				FEFAA	GTDAA	CROMM	VIC	152
37	F2VC	9F924	AA	F2AC	2C120	CA	MC00	60605	0	MC00Z10128004001	R	P	R	91/07/11	FB	P	92	R	IN:	84F92C	MC00Z10028915001	OUT:	84F92C	MC00Z10128004001		FEFAA	GTDAA	CROMM	VIC	153
39	F2VC	9F924	AA	F2AC	2C120	CA	MC00	60605	0	MC00Z10107232002	R	P	R	91/07/02	FB	P	92	R	IN:	84F92C	MC00Z10028915001	OUT:	84F95A	MC00Z10107232002		FEFAA	GTDAA	CROMM	VIC	154
[illegible]	[illegible]	[illegible]	[illegible]	[illegible]	[illegible]	[illegible]	[illegible]	[illegible]	[illegible]	[illegible]	[illegible]	[illegible]	[illegible]	[illegible]	[illegible]	[illegible]	[illegible]	[illegible]	[illegible]	[illegible]	[illegible]	[illegible]	[illegible]	[illegible]	[illegible]	[illegible]	[illegible]	[illegible]	[illegible]
[illegible]	[illegible]	[illegible]	[illegible]	[illegible]	[illegible]	[illegible]	[illegible]	[illegible]	[illegible]	[illegible]	[illegible]	[illegible]	[illegible]	[illegible]	[illegible]	[illegible]	[illegible]	[illegible]	[illegible]	[illegible]	[illegible]	[illegible]	[illegible]	[illegible]	[illegible]	[illegible]	[illegible]	[illegible]	[illegible]
59	F2VC	9F924	AA	F2VC	2E091	AA	MC00	60605	0	MC00Z10079844002	H	P	R	92/10/09	FB	P	92		IN:	84F92C	MC00Z10028915001	OUT:				FEFAB	GTDAB	CROMM	VIC	160
63	F2VC	9F924	AA	F2VC	2E091	AA	MC00	60605	0	MC00Z10113095000	H	P	R	91/11/19	FB	P	92		IN:	84F92C	MC00Z10028915001	OUT:				FEFAB	GTDAB	CROMM	VIC	161
66	F2VC	9F924	AA	F2VC	2E091	AA	MC00	60605	0	MC00Z10128004001	R	P	R	91/07/11	FB	P	92	R	IN:	84F92C	MC00Z10028915001	OUT:	84F92C	MC00Z10128004001		FEFAB	GTDAB	CROMM	VIC	162
70	F2VC	9F924	AA	F2VC	2E091	AA	MC00	60605	0	MC00Z10107232002	H	P	R	91/07/02	FB	P	92	R	IN:	84F92C	MC00Z10028915001	OUT:	84F95A	MC00Z10107232002		FEFAB	GTDAB	CROMM	VIC	163
74	F2VC	9F924	AB	F2VC	2E091	AA	MC00	60605	0	MC00Z00444495036	H	P	R	91/01/19	FB	P	92		IN:	84F92C	MC00Z10028915001	OUT:				FEFAB	GTDAB	CROMM	VIC	164
79	F2VC	9F924	AB	F2VC	2E091	AA	MC00	60605	0	MC00Z10028915000	H	P	R	90/08/17	FB	P	92	A	IN:	X64F92A	MC00Z10028915000	OUT:				FEFAB	GTDAB	CROMM	VIC	165
81	F2VC	9F924	AB	F2VC	2E091	AA	MC00	60605	0	MC00Z10028915001	H	P	R	90/08/23	FB	P	92	A	IN:	84F92C	MC00Z10028915001	OUT:				FEFAB	GTDAB	CROMM	VIC	166
83	F2VC	9F924	AB	F2VC	2E091	AA	MC00	60605	0	MC00Z10028915001	R	P	R	90/08/23	FB	P	92	R	IN:	X64F92A	MC00Z10028915000	OUT:	X64F92A	MC00Z10028915001		FEFAB	GTDAB	CROMM	VIC	167
86	F2VC	9F924	AB	F2VC	2E091	AA	MC00	60605	0	MC00Z10079844001	H	P	R	90/10/05	FB	P	92		IN:	84F92C	MC00Z10028915001	OUT:				FEFAB	GTDAB	CROMM	VIC	168

3713 5989

Sheet1

#	EPOC NUMBER	PIA	ACT	CPSC	S	RELEASE	FUN	R	RELEASE	VL	A	MT	A	IN:	CODE	NOTICE	OUT:	CODE	NOTICE	MEC				
90	F2VC 9F924 AB	F2VC 2B091	AA	MC00	60605	0	MC00E10079044882	R	P	R	90/10/08	FB	P	92		IN: 84P92C	MC00E10028915001	OUT:			FEFAA	GTDAB	CRONM	VIC 169
94	F2VC 9F924 AB	F2VC 2B091	AA	MC00	60608	0	MC00E10112009040	R	P	R	91/01/18	FB	P	92		IN: 84P92C	MC00E10028915001	OUT:			FEFAB	GTDAB	CRONM	VIC 170
97	F2VC 9F924 AB	F2VC 2B091	AA	MC00	58605	0	MC00E10128004081	R	P	R	91/07/11	FB	P	92	R	IN: 84P92C	MC00E10028915001	OUT: 84P92C	MC00E10128004001		FEFAB	GTDAB	CRONM	VIC 171
101	F2VC 9F924 AB	F2VC 2B091	AA	MC00	60605	0	MC00I10107232002	R	P	R	91/07/02	FB	P	92	R	IN: 84P92C	MC00E10028915001	OUT: 84P95A	MC00I10107232002		FEFAB	GTDAB	CRONM	VIC 172
[illegible]	[illegible]	[illegible]	[illegible]	[illegible]	[illegible]	[illegible]	[illegible]	[illegible]	[illegible]	[illegible]	[illegible]	[illegible]	[illegible]	[illegible]	[illegible]	[illegible]	[illegible]	[illegible]	[illegible]	[illegible]	[illegible]	[illegible]	[illegible]	[illegible]
126	F2VC 9F924 AB	F2AC [illegible]	[illegible]	MC00	60605	0	MC00E10107212198	R	P	R	93/02/03	FB	P	92	R	IN: [illegible]	MC00E10028915001	OUT: 84P95A	MC00E10107212198		FEFAA	GTDAB	CRONM	VIC 174
130	F2VC 9F924 AB	F2AC 2B091	BA	MC00	60605	0	MC00E00444499521	R	P	R	92/01/21	FB	P	92		IN: X84P92C	MC00E10128004008	OUT: 84P95A	MC00E10128004008		FEFAB	GTDAB	CRONM	VIC 175
134	F2VC 9F924 AB	F2AC 2B091	BA	MC00	60605	0	MC00E00444499882	R	P	R	92/03/24	FB	P	92		IN: X84P92C	MC00E10128004008	OUT: 84P95A	MC00E10128004008		FEFAB	GTDAB	CRONM	VIC 176
139	F2VC 9F924 AB	F2AC 2B091	BA	MC00	60605	0	MC00E00444499625	R	P	R	92/07/21	FB	P	92		IN: X84P92C	MC00E10128004008	OUT: 84P95A	MC00E10128004008		FEFAB	GTDAB	CRONM	VIC 177
144	F2VC 9F924 AB	F2AC 2B091	BA	MC00	60605	0	MC00E10128004001	R	P	R	91/07/11	FB	P	92	R	IN: 84P92C	MC00E10128004001	OUT: 84P95A	MC00E10128004001		FEFAB	GTDAB	CRONM	VIC 178
147	F2VC 9F924 AB	F2AC 2B091	BA	MC00	60605	0	MC00E10128004008	R	P	R	91/08/29	FB	P	92	X	IN: 84P92C	MC00E10128004001	OUT: 84P92C	MC00E10128004008		FEFAB	GTDAB	CRONM	VIC 179
149	F2VC 9F924 AB	F2AC 2B091	BA	MC00	60605	0	MC00E10128004008	R	P	R	91/08/29	FB	P	92	R	IN: X84P92C	MC00E10128004008	OUT: 84P95A	MC00E10128004008		FEFAB	GTDAB	CRONM	VIC 180
151	F2VC 9F924 AB	F2AC 2B091	BA	MC00	60605	0	MC00E10128003001	R	P	R	92/04/25	FB	P	92		IN: X84P92C	MC00E10128004008	OUT: 84P95A	MC00E10128004008		FEFAB	GTDAB	CRONM	VIC 181
[illegible]	[illegible]	[illegible]	[illegible]	[illegible]	[illegible]	[illegible]	[illegible]	[illegible]	[illegible]	[illegible]	[illegible]	[illegible]	[illegible]	[illegible]	[illegible]	[illegible]	[illegible]	[illegible]	[illegible]	[illegible]	[illegible]	[illegible]	[illegible]	[illegible]
[illegible]	[illegible]	[illegible]	[illegible]	[illegible]	[illegible]	[illegible]	[illegible]	[illegible]	[illegible]	[illegible]	[illegible]	[illegible]	[illegible]	[illegible]	[illegible]	[illegible]	[illegible]	[illegible]	[illegible]	[illegible]	[illegible]	[illegible]	[illegible]	[illegible]
189	F2VC 9F924 AB	F2AC 2B091	BA	MC00	60605	0	MC00E10221002041	R	P	R	92/08/21	FB	P	92		IN: X84P92C	MC00E10128004008	OUT: 84P95A	MC00E10128004008		FEFAB	GTDAB	CRONM	VIC 184
197	F2VC 9F924 AB	F2AC 2C320	CA	MC00	60605	0	MC00E10128004001	R	P	R	91/07/11	FB	P	92	R	IN: 84P92C	MC00E10128004001	OUT: 84P95A	MC00E10128004001		FEFAA	GTDAB	CRONM	VIC 185
199	F2VC 9F924 AB	F2AC [illegible]	[illegible]	MC00	60605	0	MC00E10128004008	R	P	R	92/08/29	FB	P	92	X	IN: 84P92C	MC00E10128004001	OUT: 84P92C	MC00E10128004008		FEFAA	GTDAB	CRONM	VIC 186
[illegible]	[illegible]	[illegible]	[illegible]	[illegible]	[illegible]	[illegible]	[illegible]	[illegible]	[illegible]	[illegible]	[illegible]	[illegible]	[illegible]	[illegible]	[illegible]	[illegible]	[illegible]	[illegible]	[illegible]	[illegible]	[illegible]	[illegible]	[illegible]	[illegible]
205	F2VC 9F924 AB	F2AC 2C320	CA	MC00	60605	0	MC00I10107232082	R	P	R	91/10/31	FB	P	92	R	IN: X84P92C	MC00E10128004008	OUT:	MC00I10107232032		FEFAA	GTDAB	CRONM	VIC 189
449	F2AB 9F924 AA	F2AB 9F924	AA	MB00	100304	0	MB00E10537002000	R	P	R	95/12/08	FB	P	90	R	IN: 84P98A	MB00E10537002000	OUT:					CRONM	VIC 190
452	F2AB 9F924 AA	F2AB 9F924	AA	MB00	100304	0	MB00E10628527000	R	P	R	96/06/14	FB	P	90	R	IN: 84P98A	MB00E10537002000	OUT: 84P98A	MB00E10628527000				CRONM	VIC 191
456	F2DB 9F924 AA	F2DB 9F924	AA	MB00	100304	1	MB00E10856420009	R	P	R	98/07/14	FB	P	90	R	IN: 84P98A	MB00E10628527000	OUT: XMCP98A	MB00E10856420009				CRONM	VIC 192
467	F2DB 9F924 AA	F2DB 9F924	AA	MB00	100304	1	MB00E10856420009	R	P	R	98/07/14	FB	P	90	R	IN: 84P98A	MB00E10628527000	OUT: 84P98A	MB00E10856420009				CRONM	VIC 193
471	F2DB 9F924 AA	F2DB 9F924	AA	MB00	100304	1	MB00E10322814068	R	P	R	97/06/16	FB	P	90		IN: 84P98A	MB00E10628527000	OUT:					CRONM	VIC 194
476	F2DB 9F924 AA	F2DB 9F924	AA	MB00	100304	1	MB00E10628527000	R	P	R	96/04/14	FB	P	90	R	IN: 84P98A	MB00E10628527000	OUT:					CRONM	VIC 195
480	F2DB 9F924 AA	F2DB 9F924	AA	MB00	100304	1	MB00E10786868017	R	P	R	97/09/23	FB	P	90		IN: 84P98A	MB00E10628527000	OUT:					CRONM	VIC 196
[illegible]	[illegible]	[illegible]	[illegible]	[illegible]	[illegible]	[illegible]	[illegible]	[illegible]	[illegible]	[illegible]	[illegible]	[illegible]	[illegible]	[illegible]	[illegible]	[illegible]	[illegible]	[illegible]	[illegible]	[illegible]	[illegible]	[illegible]	[illegible]	[illegible]
[illegible]	[illegible]	[illegible]	[illegible]	[illegible]	[illegible]	[illegible]	[illegible]	[illegible]	[illegible]	[illegible]	[illegible]	[illegible]	[illegible]	[illegible]	[illegible]	[illegible]	[illegible]	[illegible]	[illegible]	[illegible]	[illegible]	[illegible]	[illegible]	[illegible]
[illegible]	[illegible]	[illegible]	[illegible]	[illegible]	[illegible]	[illegible]	[illegible]	[illegible]	[illegible]	[illegible]	[illegible]	[illegible]	[illegible]	[illegible]	[illegible]	[illegible]	[illegible]	[illegible]	[illegible]	[illegible]	[illegible]	[illegible]	[illegible]	[illegible]
[illegible]	[illegible]	[illegible]	[illegible]	[illegible]	[illegible]	[illegible]	[illegible]	[illegible]	[illegible]	[illegible]	[illegible]	[illegible]	[illegible]	[illegible]	[illegible]	[illegible]	[illegible]	[illegible]	[illegible]	[illegible]	[illegible]	[illegible]	[illegible]	[illegible]
4	F2AC 9F924 AA	F2AC 2C320	CT	MC00	60605	0	MC00I10107212195	R	P	R	93/02/03	FB	P	92	R	IN: X84P92C	MC00E10284181000	OUT: 84P95A	MC00I10107212195		FEFAA	GTDAB	GRAND	MARQ 202
8	F2AC 9F924 AA	F2AC [illegible]	[illegible]	MC00	60605	0	[illegible]	R	P	R	93/12/27	FB	P	92	R	IN: 84P95A	[illegible]	OUT:			FEFAA	GTDAB	GRAND	MARQ 203
10	F2AC 9F924 AA	F2AC [illegible]	[illegible]	MC00	60605	0	[illegible]	R	P	R	93/12/27	FB	P	92	R	IN: 84P95A	[illegible]	OUT: 84P95A	[illegible]		FEFAA	GTDAB	GRAND	MARQ 204
32	F2VC 9F924 AA	F2AC [illegible]	[illegible]	MC00	60605	0	[illegible]	R	P	R	90/03/31	FB	P	92	R	IN: X84P92A	MC00E10028915001	OUT:			FEFAA	GTDAB	GRAND	MARQ 205
34	F2VC 9F924 AA	F2AC [illegible]	[illegible]	MC00	60605	0	[illegible]	R	P	R	90/08/23	FB	P	92	R	IN: X84P92A	MC00E10028915001	OUT: X84P92A	MC00E10028915001		FEFAA	GTDAB	GRAND	MARQ 206
36	F2VC 9F924 AA	F2AC [illegible]	[illegible]	MC00	60605	0	[illegible]	R	P	R	91/01/29	FB	P	92		IN: 84P92C	MC00E10028915001	OUT:			FEFAA	GTDAB	GRAND	MARQ 207
38	F2VC 9F924 AA	F2AC 2C320	CA	MC00	60605	0	MC00E10128004001	R	P	R	91/07/11	FB	P	92	R	IN: 84P92C	MC00E10028915001	OUT: 84P92C	MC00E10128004001		FEFAA	GTDAB	GRAND	MARQ 209
40	F2VC 9F924 AA	F2AC 2C320	CA	MC00	60605	0	MC00I10107232062	R	P	R	91/07/02	FB	P	92	R	IN: 84P92C	MC00E10028915001	OUT: 84P95A	MC00I10107232062		FEFAA	GTDAB	GRAND	MARQ 210

3713 5380

#	PART NUMBER	FIA	ACT	CHNC	S	RELEASE	FUN	R	RELEASE	VL	A	MY	A	IN:	CODE	NOTICE	OUT:	CODE	NOTICE	MPC	
44	F2VC 9F924 AA	F2VC 28091 AA	MC00	60608	0	MC00E00444499336	E P	R	91/01/18	FP	F	92		IN:	84P92C	MC00E10028915001	OUT:			FEFAB GTDAB GRAND HARQ	211
48	F2VC 9F924 AA	F2VC 28091 AA	MC00	60605	0	MC00E10028915000	H P	R	90/08/17	FP	F	92	A	IN:	X84P92A	MC00E10028915000	OUT:			FEFAB GTDAB GRAND HARQ	212
52	F2VC 9F924 AA	F2VC 28091 AA	MC00	60605	0	MC00E10028915001	H P	R	90/08/23	FP	F	92	A	IN:	84P92C	MC00E10028915001	OUT:			FEFAB GTDAB GRAND HARQ	213
53	F2VC 9F924 AA	F2VC 28091 AA	MC04	60605	0	MC00E10028915001	H P	R	90/08/23	FP	F	92	R	IN:	X84P92A	MC00E10028915000	OUT:	X84P92A	MC00E10028915001	FEFAB GTDAB GRAND HARQ	214
[illegible]	[illegible]	[illegible]	[illegible]	[illegible]		[illegible]	[illegible]							[illegible]	[illegible]	[illegible]	[illegible]			[illegible]	[illegible]
[illegible]	F2VC 9F924 AA	F2VC 28091 AA	[illegible]	60605	0	[illegible]	[illegible]		[illegible]					IN:	[illegible]	[illegible]	OUT:			FEFAB GTDAB GRAND HARQ	216
64	F2VC 9F924 AA	F2VC 28091 AA	MC00	60608	0	MC00E10112089000	H P	R	91/01/18	FP	F	92		IN:	84P92C	MC00E10028915001	OUT:			FEFAB GTDAB GRAND HARQ	217
67	F2VC 9F924 AA	F2VC 28091 AA	MC04	60605	0	MC00E10128004001	H P	R	91/07/11	FP	F	92	R	IN:	84P92C	MC00E10028915001	OUT:	84P92C	MC00E10128004001	FEFAB GTDAB GRAND HARQ	218
71	F2VC 9F924 AA	F2VC 28091 AA	MC00	60605	0	MC00E10107232002	H P	R	91/07/02	FP	F	92	R	IN:	84P92C	MC00E10028915001	OUT:	84P98A	MC00E10107232002	FEFAB GTDAB GRAND HARQ	219
75	F2VC 9F924 AB	F2VC 28091 AA	MC00	60608	0	MC00E00444499336	H P	R	91/01/18	FP	F	92		IN:	84P92C	MC00E10028915001	OUT:			FEFAB GTDAB GRAND HARQ	220
79	F2VC 9F924 AB	F2VC 28091 AA	MC04	60605	0	MC00E10028915000	H P	R	90/08/17	FP	F	92	A	IN:	X84P92A	MC00E10028915000	OUT:			FEFAB GTDAB GRAND HARQ	221
83	F2VC 9F924 AB	F2VC 28091 AA	MC04	60605	0	MC00E10028915001	H P	R	90/08/23	FP	F	92	A	IN:	84P92C	MC00E10028915001	OUT:			FEFAB GTDAB GRAND HARQ	222
84	F2VC 9F924 AB	F2VC 28091 AA	MC04	60605	0	MC00E10028915001	H P	R	90/08/23	FP	F	92	R	IN:	X84P92A	MC00E10028915000	OUT:	X84P92A	MC00E10028915001	FEFAB GTDAB GRAND HARQ	223
[illegible]	[illegible]	[illegible]	[illegible]			[illegible]	[illegible]							[illegible]	[illegible]	[illegible]	[illegible]			[illegible]	[illegible]
[illegible]	[illegible]	[illegible]	[illegible]			[illegible]	[illegible]							[illegible]	[illegible]	[illegible]	[illegible]			[illegible]	[illegible]
[illegible]	F2VC 9F924 AB	F2VC 28091 AA	MC04	60605	0	MC00E10112089013	H P	R	91/01/18	FP	F	92		IN:	84P92C	MC00E10028915001	OUT:			FEFAB GTDAB GRAND HARQ	226
[illegible]	F2VC 9F924 AB	F2VC 28091 AA	MC04	60605	0	MC00E10128004001	H P	R	91/07/11	FP	F	92	R	IN:	84P92C	MC00E10028915001	OUT:	84P92C	MC00E10128004001	FEFAB GTDAB GRAND HARQ	227
[illegible]	F2VC 9F924 AB	F2VC 28091 AA	[illegible]	[illegible]	0	MC00E10107232002	H P	R	[illegible]	FP	F	92	R	IN:	84P92C	[illegible]	OUT:	84P98A	MC00E10107232002	FEFAB GTDAB GRAND HARQ	228
[illegible]	[illegible]	[illegible]	[illegible]			[illegible]	H P	R						[illegible]	[illegible]	[illegible]	[illegible]			[illegible]	[illegible]
[illegible]	[illegible]	[illegible]	[illegible]	[illegible]		[illegible]	[illegible]							[illegible]	[illegible]	[illegible]	[illegible]	[illegible]	[illegible]	[illegible]	[illegible]
131	F2VC 9F924 AB	F2AC 28091 BA	MC00	60605	0	MC00E00444459821	H P	R	92/01/21	FP	F	92		IN:	X84P92C	MC00E10128004008	OUT:	84P95A	MC00E10128004008	FEFAB GTDAB GRAND HARQ	231
138	F2VC 9F924 AB	F2AC 28091 BA	MC04	60605	0	MC00E00444499852	H P	R	92/03/24	FP	F	92		IN:	X84P92C	MC00E10128004008	OUT:	84P95A	MC00E10128004008	FEFAB GTDAB GRAND HARQ	232
140	F2VC 9F924 AB	F2AC 28091 BA	MC00	60605	0	MC00E00444499625	H P	R	92/07/21	FP	F	92		IN:	X84P92C	MC00E10128004008	OUT:	84P95A	MC00E10128004008	FEFAB GTDAB GRAND HARQ	233
145	F2VC 9F924 AB	F2AC 28091 BA	MC04	60605	0	MC00E10128004001	H P	R	91/07/11	FP	F	92	R	IN:	84P92C	MC00E10128004001	OUT:	84P95A	MC00E10128004001	FEFAB GTDAB GRAND HARQ	234
149	F2VC 9F924 AB	F2AC 28091 BA	MC00	60605	0	MC00E10128004008	H P	R	91/08/29	FP	F	92	R	IN:	84P92C	MC00E10128004001	OUT:	84P92C	MC00E10128004008	FEFAB GTDAB GRAND HARQ	235
150	F2VC 9F924 AB	F2AC 28091 BA	MC04	60605	0	MC00E10128004008	H P	R	91/08/29	FP	F	92	R	IN:	X84P92C	MC00E10128004008	OUT:	84P95A	MC00E10128004008	FEFAB GTDAB GRAND HARQ	236
154	F2VC 9F924 AB	F2AC 28091 BA	MC00	60605	0	MC00E10129883001	H P	R	92/04/25	FP	F	92		IN:	X84P92C	MC00E10128004008	OUT:	84P95A	MC00E10128004008	FEFAB GTDAB GRAND HARQ	237
159	F2VC 9F924 AB	F2AC 28091 BA	MC00	60605	0	MC00E10129883004	H P	R	92/07/25	FP	F	92		IN:	X84P92C	MC00E10128004049	OUT:	84P95A	MC00E10128004008	FEFAB GTDAB GRAND HARQ	238
[illegible]	[illegible]	[illegible]	[illegible]	[illegible]		[illegible]	[illegible]							[illegible]	[illegible]	[illegible]	[illegible]	[illegible]	[illegible]	[illegible]	239
[illegible]	[illegible]	[illegible]	[illegible]			[illegible]	[illegible]							[illegible]	[illegible]	[illegible]	[illegible]	[illegible]	[illegible]	[illegible]	[illegible]
201	[illegible]	[illegible]	[illegible]	[illegible]	0	[illegible]	H P	R	91/03/29	FP	F	92	[illegible]	IN:	[illegible]	[illegible]	OUT:	84P92C	[illegible]	FEFAB GTDAB GRAND HARQ	[illegible]
204	F2VC 9F924 AB	[illegible]	[illegible]	[illegible]	[illegible]	[illegible]	H P	R	[illegible]	FP	F	92	R	IN:	[illegible]	[illegible]	OUT:	[illegible]	[illegible]	FEFAB GTDAB GRAND HARQ	244
[illegible]	[illegible]	[illegible]	[illegible]	[illegible]	[illegible]	[illegible]	[illegible]		[illegible]	[illegible]		[illegible]	[illegible]	IN:	[illegible]	[illegible]	OUT:		[illegible]	FEFAB GTDAB GRAND HARQ	245
[illegible]	F8AB 9F924 AA	F8AB 9F924 AA	[illegible]	[illegible]	[illegible]	[illegible]	H P	R	[illegible]	[illegible]		[illegible]	A	[illegible]	[illegible]	[illegible]	OUT:			GRAND HARQ	246
[illegible]	F8AB 9F924 AA	F8AB 9F924 AA	[illegible]	[illegible]	[illegible]	[illegible]	H P	R	[illegible]	[illegible]		[illegible]	[illegible]	IN:	[illegible]	[illegible]	OUT:	[illegible]	[illegible]	GRAND HARQ	247
[illegible]	F8DB 9F924 AA	F8DB 9F924 AA	[illegible]	100304	1	[illegible]	H P	R	[illegible]	FP	F	[illegible]	A	IN:	[illegible]	[illegible]	OUT:	[illegible]	[illegible]	GRAND HARQ	248
[illegible]	F8DB 9F924 AA	F8DB 9F924 AA	[illegible]	[illegible]	1	[illegible]	[illegible]		[illegible]	[illegible]		[illegible]	R	IN:	[illegible]	[illegible]	OUT:	[illegible]	[illegible]	GRAND HARQ	249
[illegible]	F8DB 9F924 AA	F8DB 9F924 AA	[illegible]	100304	1	[illegible]	H P	R	[illegible]	[illegible]		[illegible]		IN:	[illegible]	[illegible]	OUT:			GRAND HARQ	250
477	F8DB 9F924 AA	F8DB 9F924 AA	MB00	100304	1	MB00E10425527008	H P	R	96/06/14	FP	F	96	A	IN:	84P96A	MB00E10425527000	OUT:			GRAND HARQ	251
481	F8DB 9F924 AA	F8DB 9F924 AA	MB00	100304	1	MB00E10754963047	H P	R	97/08/23	FP	F	96		IN:	84P96A	MB00E10425527008	OUT:			GRAND HARQ	252

3713 6891

#	START NUMBER		FIX		ACT	CPGC	S	RELEASE	FDN	R	RELEASE	VL	A	RT	A	IN:	CODE	NOTICE	OUT:	CODE	NOTICE	XFC		
486	FBDB	9F924	AA	FBDB	9F924	AA	MB00	100304	1	MB00E10781817002	N	P	R	97/10/06	FP	P	98	IN: 84F98A	MB00E10625527000	OUT:			GRAND MARQ 253
492	FBDB	9F924	AA	FBDB	9F924	AA	MB00	100304	1	MB00E10781817002	N	P	R	97/10/10	FP	P	98	IN: 84F98A	MB00E10625527000	OUT:			GRAND MARQ 254
496	FBDB	9F924	AA	FBDB	9F924	AA	MB00	100304	1	MB00E10785853001	N	P	R	97/12/16	FP	P	98	R IN: 84F98A	MB00E10625527000	OUT:	X84F98A	MB00E10785853001	GRAND MARQ 255
508	XF1T	9F924	AC	XF1T	9F924	AC	AE00	100304	0	MB00E10907659000	N	P	R	98/11/17	FP	P	98	R IN:	X84F98A	MB00E10907659000	OUT:	*	GRAND MARQ 256
[illegible]	[illegible]	[illegible]	[illegible]	[illegible]	[illegible]	[illegible]	[illegible]	[illegible]	[illegible]	[illegible]	[illegible]	[illegible]	[illegible]	[illegible]	[illegible]	[illegible]	[illegible]	[illegible]	[illegible]	[illegible]	[illegible]	[illegible]	[illegible]
6	F2AC	9F924	AA	F2AC	2C320	CC	XC00	60605	0	XC00E10391082000	N	P	R	94/03/29	FZ	P	93	R IN: 84F93A	XC00E10217095000	OUT:	84F93A	XC00E10217095000	GTDAB GK (MEXICO) 256
41	F2VC	9F924	AA	F2AC	2C320	CA	XC00	60605	0	XC00E10121269002	N	P	R	91/03/27	FZ	P	92	A IN: 84F92B	XC00E10121269002	OUT:			GTDAB GK (MEXICO) 259
42	F2VC	9F924	AA	F2AC	2C320	CA	XC00	60605	0	XC00E10153275000	N	P	R	91/08/09	FZ	P	92	R IN: 84F92B	XC00E10121269002	OUT:	84F92B	XC00E10153275000	GTDAB GK (MEXICO) 260
120	F2VC	9F924	AB	F2AC	2C320	CC	XC00	60605	0	XC00E10217095000	N	P	R	92/03/27	FZ	P	93	A IN: 84F93A	XC00E10217095000	OUT:			GTDAB GK (MEXICO) 261
121	F2VC	9F924	AB	F2AC	2C320	CC	XC00	60605	0	XC00E10391082000	N	P	R	94/03/29	FZ	P	93	R IN: 84F93A	XC00E10217095000	OUT:	84F93A	XC00E10391082000	GTDAB GK (MEXICO) 262
207	F2VC	9F924	AB	F2AC	2C320	CB	XC00	60605	0	XC00E10153275000	N	P	R	91/08/09	FZ	P	92	A IN: 84F92B	XC00E10153275000	OUT:			GTDAB GK (MEXICO) 263
208	F2VC	9F924	AB	F2AC	2C320	CB	XC00	60605	0	XC00E10217095000	N	P	R	92/03/27	FZ	P	92	R IN: 84F92B	XC00E10153275000	OUT:	84F93A	XC00E10217095000	GTDAB GK (MEXICO) 264
329	F9DB	9F924	AA	F9DB	9F924	AA	MB00	60605	0	MB00E10262820051	N	P	R	93/11/02	FD	P	95	IN: 84F95A	MB00E10122345439	OUT:			FM74 265
[illegible]	[illegible]	[illegible]	[illegible]	[illegible]	[illegible]	[illegible]	[illegible]	[illegible]	[illegible]	[illegible]	[illegible]	[illegible]	[illegible]	[illegible]	[illegible]	[illegible]	[illegible]	[illegible]	[illegible]	[illegible]	[illegible]	[illegible]	[illegible]
311	F9DB	9F924	AA	F9DB	9F924	AA	MB00	[illegible]	0	MB00E10734856002	N	P	R	97/08/22	JC	P	98	A IN: 84F98A	MB00E10734856002	OUT:	84F98A	MB00E10734856002	FM74 266
312	F9DB	9F924	AA	F9DB	9F924	AA	MB00	[illegible]	0	MB00E10734856002	N	P	R	97/10/29	JC	P	98	A IN: 84F98A	MB00E10734856002	OUT:			FM74 267
313	F9DB	9F924	AA	F9DB	9F924	AA	MB00	[illegible]	0	MB00E10122345439	N	P	R	98/05/12	JC	P	98	A IN: 84F98A	MB00E10122345439	OUT:			FM74 268
[illegible]	[illegible]	[illegible]	[illegible]	[illegible]	[illegible]	[illegible]	[illegible]	[illegible]	[illegible]	[illegible]	[illegible]	[illegible]	[illegible]	[illegible]	[illegible]	[illegible]	[illegible]	[illegible]	[illegible]	[illegible]	[illegible]	[illegible]	[illegible]
377	F9DB	[illegible]	[illegible]	[illegible]	[illegible]	[illegible]	[illegible]	[illegible]	[illegible]	[illegible]	[illegible]	[illegible]	[illegible]	[illegible]	[illegible]	[illegible]	[illegible]	[illegible]	[illegible]	[illegible]	[illegible]	[illegible]	[illegible]
474	F9DB	9F924	AA	F9DB	9F924	AA	MB00	100304	1	MB00E10322914965	N	P	R	97/06/15	JC	P	98	IN: 84F98A	MB00E10577874002	OUT:			FM74 273
475	F9DB	9F924	AA	F9DB	9F924	AA	MB00	100304	1	MB00E10577874002	N	P	R	98/05/10	JC	P	98	A IN: 84F98A	MB00E10577874002	OUT:			FM74 274
479	F9DB	9F924	AA	F9DB	9F924	AA	MB00	100304	1	MB00E10625527000	N	P	R	96/06/14	JC	P	98	IN: 84F98A	MB00E10577874002	OUT:			FM74 275
483	F9DB	9F924	AA	F9DB	9F924	AA	MB00	100304	1	MB00E10754965047	N	P	R	97/09/23	JC	P	98	IN: 84F98A	MB00E10577874002	OUT:			FM74 276
488	F9DB	9F924	AA	F9DB	9F924	AA	MB00	100304	1	MB00E10781817002	N	P	R	97/10/06	JC	P	98	IN: 84F98A	MB00E10577874002	OUT:			FM74 277
494	F9DB	9F924	AA	F9DB	9F924	AA	MB00	100304	1	MB00E10781817002	N	P	R	97/10/10	JC	P	98	IN: 84F98A	MB00E10577874002	OUT:			FM74 278
508	F9DB	9F924	AA	F9DB	9F924	AA	MB00	100304	1	MB00E10785853001	N	P	R	97/12/16	JC	P	98	R IN: 84F98A	MB00E10577874002	OUT:	X84F98A	MB00E10785853001	FM74 279
510	XF1T	9F924	AC	XF1T	9F924	AC	AE00	100304	0	MB00E10907659000	N	P	R	98/11/17	FP	P	99	R IN:	X84F99A	MB00E10907659000	OUT:		FM74 280
[illegible]	[illegible]	[illegible]	[illegible]	[illegible]	[illegible]	[illegible]	[illegible]	[illegible]	[illegible]	[illegible]	[illegible]	[illegible]	[illegible]	[illegible]	[illegible]	[illegible]	[illegible]	[illegible]	[illegible]	[illegible]	[illegible]	[illegible]	[illegible]
141	F2VC	9F924	AB	F2AC	2C320	BB	MC00	60605	0	MC00E10137319000	N	P	R	91/07/17	LB	P	93	A IN: 84F93A	MC00E10137319000	OUT:			[illegible] [illegible]
[illegible]	[illegible]	[illegible]	[illegible]	[illegible]	[illegible]	[illegible]	[illegible]	[illegible]	[illegible]	[illegible]	[illegible]	[illegible]	[illegible]	[illegible]	[illegible]	[illegible]	[illegible]	[illegible]	[illegible]	[illegible]	[illegible]	[illegible]	[illegible]
153	[illegible]	[illegible]	AB	[illegible]	[illegible]	BB	[illegible]	[illegible]	[illegible]	[illegible]	[illegible]	[illegible]	[illegible]	[illegible]	[illegible]	IN:	[illegible]	[illegible]	OUT:			[illegible] VIII 285
154	[illegible]	[illegible]	AB	[illegible]	[illegible]	BB	[illegible]	[illegible]	[illegible]	[illegible]	[illegible]	[illegible]	[illegible]	[illegible]	[illegible]	IN:	[illegible]	[illegible]	OUT:	[illegible]	[illegible]	[illegible] VIII 287
155	[illegible]	[illegible]	AB	[illegible]	[illegible]	BB	[illegible]	[illegible]	[illegible]	[illegible]	[illegible]	[illegible]	[illegible]	[illegible]	[illegible]	IN:	[illegible]	[illegible]	OUT:	[illegible]	[illegible]	[illegible] VIII 289
213	[illegible]	[illegible]	AB	[illegible]	[illegible]	AA	[illegible]	[illegible]	[illegible]	[illegible]	[illegible]	[illegible]	[illegible]	[illegible]	[illegible]	IN:	[illegible]	[illegible]	OUT:			[illegible] VIII 290
214	[illegible]	[illegible]	AB	[illegible]	[illegible]	AA	[illegible]	[illegible]	[illegible]	[illegible]	[illegible]	[illegible]	[illegible]	[illegible]	[illegible]	IN:	[illegible]	[illegible]	OUT:			[illegible] VIII 293
215	[illegible]	[illegible]	AB	[illegible]	[illegible]	AA	[illegible]	[illegible]	[illegible]	[illegible]	[illegible]	[illegible]	[illegible]	[illegible]	[illegible]	IN:	[illegible]	[illegible]	OUT:	[illegible]	[illegible]	[illegible] VIII 292
219	F2VC	9F924	AB	F4LC	2C320	AA	MC00	60605	0	MC00E10246723000	N	P	R	92/11/10	LB	P	94	IN: 84F94A	MC00E10152467135	OUT:			MARK VIII 293
221	F2VC	9F924	AB	F4LC	2C320	AA	MC00	60605	0	MC00E10152467135	N	P	R	92/08/18	LB	P	94	A IN: 84F94A	MC00E10152467135	OUT:			MARK VIII 294

3713 5382

#	SHIP NUMBER	PIA	ACT	CPSC	S RELEASE	FIN R RELEASE	VL A MT A IN:	CODE	NOTICE	OUT:	CODE	NOTICE	NEC		
223	F2VC 9F924 AB	F4LC 2C320 AB	MC00 60605	0 MC00E10079179036	H P R 93/08/05	LB P 94	IN: 84P94A	MC00E10224878000	OUT:					MARK VIII	295
224	F2VC 9F924 AB	F4LC 2C320 AB	MC00 60605	0 MC00E10224878000	H P R 92/12/10	LB P 94 A	IN: 84P94A	MC00E10224878000	OUT:					MARK VIII	296
226	F2VC 9F924 AB	F4LC 2C320 AB	MC00 60605	0 MC00E10351198011	H P R 94/06/27	LB P 94	IN: 84P94A	MC00E10224878000	OUT:	84P97A	MC00E10283465045			MARK VIII	297
227	F2VC 9F924 AB	F4LC 2C320 AB	MC00 60605	0 MC00E10413691000	H P R 94/08/10	LB P 94 X	IN: 84P94A	MC00E10224878000	OUT:		MC00E10413691000			MARK VIII	298
[illegible]	[illegible]	[illegible]	[illegible]	[illegible]	[illegible]	[illegible]	[illegible]	[illegible]	[illegible]	[illegible]	[illegible]			[illegible]	[illegible]
229	F2VC 9F924 AB	F4LC 2C320 AB	MC00 60605	0 MC00E10283465037	H P R 93/10/29	LB P 94	IN: 84P94A	MC00E10224878000	OUT:					MARK VIII	300
231	F2VC 9F924 AB	F4LC 2C320 AB	MC00 60605	0 MC00E10283465045	H P R 93/11/12	LB P 94 R	IN: 84P94A	MC00E10224878000	OUT:	84P97A	MC00E10283465045			MARK VIII	301
365	F6LC 9F924 AA	F4LC 2C320 AA	MC00 60605	0 MC00E10419885000	H P R 94/10/21	LB P 96 R	IN: 84P95A	MC00E10419955000	OUT:					MARK VIII	302
367	F6LC 9F924 AA	F4LC 2C320 AA	MC00 60605	0 MC00E10816015001	H P R 95/04/27	LB P 95 R	IN: 84P95A	MC00E10816015000	OUT:	84P97A	MC00E10816015001			MARK VIII	303
228	F2VC 9F924 AB	F4LC 2C320 AB	MC00 60605	0 MC00E10283465037	H P R 94/06/27	LQ U 99 R	IN: 84P95A	MC00E10283465037	OUT:	84P99A	MC00E10351198011			DEM99	304
230	F2VC 9F924 AB	F4LC 2C320 AB	MC00 60605	0 MC00E10283465037	H P R 93/10/29	LQ U 99 A	IN: 84P95A	MC00E10283465037	OUT:					DEM99	305
232	F2VC 9F924 AB	F4LC 2C320 AB	MC00 60605	0 MC00E10283465045	H P R 93/11/12	LQ U 99	IN: 84P95A	MC00E10283465037	OUT:					DEM99	306
415	F6EB 9F924 AA	F6EB 9F924 AA	MB00 100304	1 MB00E10252528202	H P R 95/10/30	LQ U 99	IN: 84P95A	MB00E10252497217	OUT:					DEM99	307
417	F6EB 9F924 AA	F6EB 9F924 AA	MB00 100304	1 MB00E10252928310	H P R 95/04/28	LQ U 99	IN: 84P95A	MB00E10252497217	OUT:					[illegible]	[illegible]
[illegible]	[illegible]	[illegible]	[illegible]	[illegible]	[illegible]	[illegible]	[illegible]	[illegible]	[illegible]	[illegible]	[illegible]			[illegible]	[illegible]
419	F6EB 9F924 AA	F6EB 9F924 AA	MB00 100304	1 MB00E10271831013	H P R 95/10/25	LQ U 99	IN: [illegible]	MB00E10252497217	OUT:					DEM99	310
420	F6EB 9F924 AA	F6EB 9F924 AA	MB00 100304	1 MB00E10374572316	H P R [illegible]	LQ U 99 A	IN: [illegible]	MB00E10374572316	OUT:		[illegible]			DEM99	311
422	F6EB 9F924 AA	F6EB 9F924 AA	MB00 100304	1 MB00E10374584255	H P R [illegible]	LQ U 99	IN: [illegible]	MB00E10374584255	OUT:					DEM99	312
[illegible]	[illegible]	[illegible]	[illegible]	[illegible]	[illegible]	[illegible]	[illegible]	[illegible]	[illegible]	[illegible]				[illegible]	[illegible]
439	F6EB 9F924 AB	F6EB 9F924 AB	MB00 100304	1 MB00E10374584255	H P R 95/10/19	LQ U 99 A	IN: 84P95A	MB00E10374584255	OUT:				GTBAB	DEM99	315
440	F6EB 9F924 AB	F6EB 9F924 AB	MB00 100304	1 MB00E10374584285	H P R 95/10/19	LQ U 99 A	IN: 84P95A	MB00E10374584255	OUT:				GTBAB JBEAB	DEM99	316
441	F6EB 9F924 AB	F6EB 9F924 AB	MB00 100304	1 MB00E10540703494	H P R 96/01/08	LQ U 99 R	IN: 84P95A	MB00E10374584255	OUT:	84P99A	MB00E10540703494		GTBAB	DEM99	317
442	F6EB 9F924 AB	F6EB 9F924 AB	MB00 100304	1 MB00E10540703494	H P R 96/01/08	LQ U 99 R	IN: 84P95A	MB00E10374584255	OUT:	84P99A	MB00E10540703494		GTBAB JBEAB	DEM99	318
459	F6EB 9F924 AA	F6EB 9F924 AA	MB00 100304	0 MB00E10333814885	H P R 97/06/16	LQ P 99	IN: 84P95A	MB00E10589492470	OUT:					DEM99	319
462	F6EB 9F924 AA	F6EB 9F924 AA	MB00 100304	0 MB00E10736090000	H P R 97/04/30	LQ P 99	IN: 84P95A	MB00E10589492470	OUT:					DEM99	320
463	F6EB 9F924 AA	F6EB 9F924 AA	MB00 100304	0 MB00E10785853001	H P R 97/12/19	LQ P 99 X	IN: 84P95A	MB00E10589492470	OUT:	84P99A	MB00E10785853001			DEM99	321
465	F6EB 9F924 AA	F6EB 9F924 AA	MB00 100304	0 MB00E10589492470	H P R [illegible]	LQ P 99 A	IN: [illegible]	MB00E10589492470	OUT:					DEM99	322
[illegible]	[illegible]	[illegible]	[illegible]	[illegible]	[illegible]	[illegible]	[illegible]	[illegible]	[illegible]					[illegible]	[illegible]
425	F6EB 9F924 AA	F6EB 9F924 AA	MB00 100304	1 MB00E10840703517	H P P 97/01/24	LQ 99								DEM99	326
[illegible]	[illegible]	[illegible]	[illegible]	[illegible]	[illegible]	[illegible]	[illegible]	[illegible]	[illegible]	[illegible]			[illegible]	[illegible]	[illegible]
[illegible]	[illegible]	[illegible]	[illegible]	[illegible]	[illegible]	[illegible]	[illegible]	[illegible]	[illegible]	[illegible]			[illegible]	[illegible]	[illegible]
[illegible]	[illegible]	[illegible]	[illegible]	[illegible]	[illegible]	[illegible]	[illegible]	[illegible]	[illegible]	[illegible]			[illegible]	[illegible]	[illegible]
[illegible]	[illegible]	[illegible]	[illegible]	[illegible]	[illegible]	[illegible]	[illegible]	[illegible]	[illegible]	[illegible]			[illegible]	[illegible]	[illegible]
374	F6EB 9F924 AA	F6EB 9F924 AA	[illegible]	[illegible]	[illegible]	[illegible]	[illegible]	[illegible]	[illegible]	[illegible]	[illegible]	[illegible]	[illegible]	[illegible]	[illegible]
377	F6EB [illegible]	[illegible]	[illegible]	[illegible]	[illegible]	[illegible]	[illegible]	[illegible]	[illegible]	[illegible]			[illegible]	[illegible]	[illegible]
382	F6EB 9F924 AA	F6EB 9F924 AA	MB00 100304	0 MB00E10252[illegible]	H P R [illegible]	LQ 99								THIRD	334
384	F6EB 9F924 AA	F6EB 9F924 AA	MB00 100304	0 MB00E10252604482	H P R 95/08/14	LQ 95								THIRD	335
385	F6EB 9F924 AA	F6EB 9F924 AA	MB00 100304	0 MB00E10252409492	H P R 95/08/14	LQ 95								THIRD	336

3713 5303

#	PART NUMBER		FIX		ACT	CMOC	S	RELEASE	TYP	R	RELEASE	VL	A	HV	A	IN:	CODE	NOTICE	OUT:	CODE	NOTICE	XFC			
387	F6BB	9F924	AA	F6BB	9F924	AA	MB00	100304	H	P	R	94/12/02	SD	94										TRIRD	337
389	F6BB	9F924	AA	F6BB	9F924	AA	MB00	100304	H	P	R	95/08/28	SD	95										TRIRD	338
390	F6BB	9F924	AA	F6BB	9F924	AA	MB00	100304	H	P	R	95/08/28	SD	96										TRIRD	339
392	F6BB	9F924	AA	F6BB	9F924	AA	MB00	100304	H	P	R	95/01/05	SD	97										TRIRD	340
[illegible]																									[illegible]
396	F6BB	9F924	AA	F6BB	9F924	AA	MB00	100304	H	P	R	96/04/05	SD	98										TRIRD	342
397	F6BB	9F924	AA	F6BB	9F924	AA	MB00	100304	H	P	R	96/04/08	SD	99										TRIRD	343
399	F6BB	9F924	AA	F6BB	9F924	AA	MB00	100304	H	P	R	96/04/25	SD	98										TRIRD	344
400	F6BB	9F924	AA	F6BB	9F924	AA	MB00	100304	H	P	R	96/04/25	SD	99										TRIRD	345
401	F6BB	9F924	AA	F6BB	9F924	AA	MB00	100304	H	P	R	96/04/23	SD	97										TRIRD	346
402	F6BB	9F924	AA	F6BB	9F924	AA	MB00	100304	H	P	R	96/04/23	SD	97										TRIRD	347
403	F6BB	9F924	AA	F6BB	9F924	AA	MB00	100304	H	P	R	96/04/23	SD	98										TRIRD	348
404	F6BB	9F924	AA	F6BB	9F924	AA	MB00	100304	H	P	R	96/04/23	SD	96										TRIRD	349
408	F6BB	9F924	AA	F6BB	9F924	AA	MB00	100304	H	P	R	97/04/12	SD	97										TRIRD	350
410	F6BB	9F924	AA	F6BB	9F924	AA	MB00	100304	H	P	R	97/04/15	SD	97										[illegible]	[illegible]
412	F6BB	9F924	AA	F6BB	9F924	AA	MB00	100304	H	P	R	94/07/13	SD	96										TRIRD	352
414	[illegible]	[illegible]	AA	F6BB	9F924	AA	MB00	100304	H	P	R	94/06/23	SD	96										TRIRD	353
[illegible]	[illegible]	[illegible]	AA	F6BB	[illegible]	AA	MB00	100304	[illegible]	[illegible]	[illegible]	[illegible]	[illegible]	[illegible]	[illegible]	[illegible]	[illegible]	[illegible]	[illegible]	[illegible]	[illegible]	[illegible]	[illegible]	[illegible]	354
[illegible]	[illegible]	[illegible]	[illegible]	[illegible]	[illegible]	[illegible]	[illegible]	[illegible]	[illegible]	[illegible]	[illegible]	[illegible]	[illegible]	[illegible]	[illegible]	[illegible]	[illegible]	[illegible]	[illegible]	[illegible]	[illegible]	[illegible]	[illegible]	[illegible]	[illegible]
376	F6BB	3E924	AA	F6BB	9F924	AA	MB00	100304	D	MB00E10282689410	H	P	R	94/09/22	SD	P	95	R	IN: 84F95A	MB00E10282689394	OUT: 84F95A	MB00E10282689410	FEAAB	GTDAB	COUGAR	357
379	F6BB	9F924	AA	F6BB	9F924	AA	MB00	100304	D	MB00E10282689410	H	P	R	94/09/22	SD	P	96	R	IN: 84F95A	MB00E10282689410	OUT:		FEAAB	GTDAB	COUGAR	358
380	F6BB	9F924	AA	F6BB	9F924	AA	MB00	100304	D	MB00E10282689410	H	P	R	94/09/22	SD	P	95	R	IN: 84F95A	MB00E10282689394	OUT: 84F95A	MB00E10282689410	GTDAB	XBAAD	COUGAR	359
381	F6BB	9F924	AA	F6BB	9F924	AA	MB00	100304	D	MB00E10282689410	H	P	R	94/09/22	SD	P	96	R	IN: 84F95A	MB00E10282689410	OUT:		GTDAB	XBAAD	COUGAR	360
383	F6BB	9F924	AA	F6BB	9F924	AA	MB00	100304	D	MB00E10282689890	H	P	R	95/08/11	SD		96							COUGAR	361
384	F6BB	9F924	AA	F6BB	9F924	AA	MB00	100304	D	MB00E10282889852	H	P	R	96/06/14	SD		96							COUGAR	362
386	F6BB	9F924	AA	F6BB	9F924	AA	MB00	100304	D	MB00E10282829202	H	P	R	94/12/02	SD		96							COUGAR	363
391	F6BB	9F924	AA	F6BB	9F924	AA	MB00	100304	D	MB00E10282429210	H	P	R	[illegible]	SD		96							COUGAR	364
[illegible]	[illegible]	[illegible]	[illegible]	[illegible]	[illegible]	[illegible]	[illegible]	[illegible]	[illegible]	[illegible]	[illegible]	[illegible]	[illegible]	[illegible]	[illegible]	[illegible]	[illegible]	[illegible]	[illegible]	[illegible]	[illegible]	[illegible]	[illegible]	[illegible]	[illegible]
402	F6BB	9F924	AA	F6BB	9F924	AA	MB00	100304	D	MB00E10591161000	H	P	R	96/04/25	SD		96							COUGAR	368
[illegible]	[illegible]	[illegible]	[illegible]	[illegible]	[illegible]	[illegible]	[illegible]	[illegible]	[illegible]	[illegible]	[illegible]	[illegible]	[illegible]	[illegible]	[illegible]	[illegible]	[illegible]	[illegible]	[illegible]	[illegible]	[illegible]	[illegible]	[illegible]	[illegible]	[illegible]
11	[illegible]	[illegible]	AA	[illegible]	[illegible]	AA	[illegible]	[illegible]	[illegible]	[illegible]	[illegible]	[illegible]	[illegible]	[illegible]	[illegible]	[illegible]	[illegible]	[illegible]	[illegible]	[illegible]	[illegible]	[illegible]	[illegible]	[illegible]	[illegible]
12	[illegible]	9F924	AA	[illegible]	2C320	AC	MC00	40605	D	MC00E10408268000	H	P	R	94/05/17	VB	P	95	A	IN: 84F95A	MC00E10408295000	OUT:		FEKAA		FN116	374
15	[illegible]	9F924	AA	[illegible]	2C320	AC	MC00	40605	D	MC00E10487567813	H	P	R	95/06/14	VB	P	95		IN: 84F95A	MC00E10408295000	OUT: 84F95A	MC00E10487555000	FEKAA		FN116	377
16	[illegible]	9F924	AA	[illegible]	2C320	AC	MC00	40605	D	MC00E10487567825	H	P	R	95/10/18	VB	P	95		IN: 84F95A	MC00E10408295000	OUT: 84F95A	MC00E10487555000	FEKAA		FN116	378

3713 5394

#	PART NUMBER	PIA	ACT	CPEC	#	RELEASE	TOW R	RELEASE	VL	A	NY	A	IN:	CODE	NOTICE	OUT:	CODE	NOTICE	HFC			
13	F2AC 9F924 AA	F2VC 2C320 AC	NC00	60605	0	NC00E10531002001	B P R	85/10/27	VB	P	95		IN:	54P95A	NC00E10405285000	OUT:	54P95A	NC00I10487585000	FEAAA		FN116	379
22	F2AC 9F924 AA	F2VC 2C320 AC	NC00	60605	0	NC00I10487585000	B P R	95/03/21	VB	P	95	R	IN:	54P95A	NC00E10405215000	OUT:	54P95A	NC00I10487585000	FEAAA		FN116	380
24	F2VC 9F924 AA	F2VC 2C310 AA	NC00	60605	0	NC00E10080018000	B P R	90/08/17	VB	P	92		IN:	54P92A	NC00I10014063008	OUT:			AAEAA	FEAAA	FN116	381
25	F2VC 9F924 AA	F2VC 2C320 AA	NC00	60605	0	NC00E10079944001	B P R	90/10/05	VB	P	92	R	IN:	54P92A	NC00I10014063008	OUT:	54P92A	NC00E10079944001	AAEAA	FEAAA	FN116	382
[illegible]	[illegible]	[illegible]	[illegible]	[illegible]		[illegible]	[illegible]	[illegible]	[illegible]						[illegible]	[illegible]			[illegible]	[illegible]	[illegible]	[illegible]
[illegible]	F2VC 9F924 AA	F2VC 2C320 AA	NC00	60605	0	NC00E10112[illegible]	B P R	91/02/07	VB	P	92	R	IN:	X54P92A	NC00E10079944001	OUT:	X54P92A	NC00E10112[illegible]	AAEAA	FEAAA	FN116	384
29	F2VC 9F924 AA	F2VC 2C320 AA	NC00	60605	0	NC00I10014063008	B P R	90/05/24	VB	P	92	A	IN:	54P92A	NC00I10014063008	OUT:			AAEAA	FEAAA	FN116	385
43	F2VC 9F924 AA	F2VC 28091 AA	NC00	60605	0	NC00E00444459336	B P R	91/02/18	VB	P	92	A	IN:	X54P92A	NC00E00444459336	OUT:			FEAAB		FN116	386
46	F2VC 9F924 AA	F2VC 28091 AA	NC00	60605	0	NC00E00444492316	B P R	91/01/18	VB	P	92	R	IN:	X54P92A	NC00E10079944002	OUT:	X54P92A	NC00E00444499136	FEAAB	FEFAB	FN116	387
49	F2VC 9F924 AA	F2VC 28091 AA	NC00	60605	0	NC00E10028915000	B P R	90/08/17	VB	P	92		IN:	54P92A	NC00I10014063008	OUT:			FEAAB		FN116	388
54	F2VC 9F924 AA	F2VC 28091 AA	NC00	60605	0	NC00E10028915061	B P R	90/08/23	VB	P	92		IN:	54P92A	NC00I10014063008	OUT:			FEAAB		FN116	389
57	F2VC 9F924 AA	F2VC 28091 AA	NC00	60605	0	NC00E10079944001	B P R	90/10/05	VB	P	92	R	IN:	54P92A	NC00I10014063008	OUT:	54P92A	NC00E10079944001	FEAAB		FN116	390
60	F2VC 9F924 AA	F2VC 28091 AA	NC00	60605	0	NC00E10079944001	B P R	90/10/05	VB	P	92	A	IN:	X54P92A	NC00E10079944001	OUT:			FEAAB		FN116	391
61	F2VC 9F924 AA	F2VC 28091 AA	NC00	60605	0	NC00E10079944002	B P R	90/10/08	VB	P	92	R	IN:	X54P92A	NC00E10079944001	OUT:	X54P92A	NC00E10079944002	FEAAB		FN116	392
62	F2VC 9F924 AA	F2VC 28091 AA	NC00	60605	0	NC00E10079944002	B P R	90/10/08	VB	P	92	A	IN:	X54P92A	NC00E10079944002	OUT:			FEAAB	FEFAB	FN116	393
67	F2VC 9F924 AA	F2VC 28091 AA	NC00	60605	0	NC00E10112[illegible]	B P R	91/01/18	VB	P	92		IN:	X54P92A	NC00E10079944002	OUT:			FEAAB	FEFAB	FN116	394
[illegible]	[illegible]	[illegible]	[illegible]	[illegible]	0	[illegible]	[illegible]	[illegible]	[illegible]				[illegible]	[illegible]	[illegible]	OUT:	[illegible]	[illegible]	FEAAB		FN116	395
[illegible]	[illegible]	[illegible]	[illegible]	[illegible]	0	[illegible]	[illegible]	[illegible]	[illegible]			A	[illegible]	[illegible]	[illegible]	OUT:			FEAAB		FN116	[illegible]
[illegible]	[illegible]	[illegible]	[illegible]	[illegible]		[illegible]	[illegible]	[illegible]	[illegible]				[illegible]	[illegible]	[illegible]	[illegible]	[illegible]	[illegible]	[illegible]		[illegible]	[illegible]
[illegible]	[illegible]	[illegible]	[illegible]	[illegible]	[illegible]	[illegible]	[illegible]	[illegible]	[illegible]				[illegible]	[illegible]	[illegible]	[illegible]			FEAAB		FN116	[illegible]
77	F2VC 9F924 AB	F2VC 28091 AA	NC00	60605	0	NC00E00444492[illegible]	B P R	91/01/18	VB	P	92	A	IN:	X54P92A	NC00E10079944002	OUT:	X54P92A	NC00E00444499136	FEAAB	FEFAB	FN116	399
80	F2VC 9F924 AB	F2VC 28091 AA	NC00	60605	0	NC00E10028915080	B P R	90/08/17	VB	P	92		IN:	54P92A	NC00I10014063008	OUT:			FEAAB		FN116	400
85	F2VC 9F924 AB	F2VC 28091 AA	NC00	60605	0	NC00E10028915061	B P R	90/08/23	VB	P	92		IN:	54P92A	NC00I10014063008	OUT:			FEAAB		FN116	401
88	F2VC 9F924 AB	F2VC 28091 AA	NC00	60605	0	NC00E10079944001	B P R	90/10/08	VB	P	92	R	IN:	54P92A	NC00I10014063008	OUT:	54P92A	NC00E10079944001	FEAAB		FN116	402
89	F2VC 9F924 AB	F2VC 28091 AA	NC00	60605	0	NC00E10079944001	B P R	90/10/05	VB	P	92	A	IN:	X54P92A	NC00E10079944001	OUT:			FEAAB		FN116	403
92	F2VC 9F924 AB	F2VC 28091 AA	NC00	60605	0	NC00E10079944002	B P R	90/10/08	VB	P	92	R	IN:	X54P92A	NC00E10079944001	OUT:	X54P92A	NC00E10079944002	FEAAB		FN116	404
95	F2VC 9F924 AB	F2VC 28091 AA	NC00	60605	0	NC00E10079944002	B P R	90/10/08	VB	P	92	A	IN:	X54P92A	NC00E10079944002	OUT:			FEAAB	FEFAB	FN116	405
98	F2VC 9F924 AB	F2VC 28091 AA	NC00	60605	0	NC00E10112[illegible]	B P R	91/01/18	VB	P	92		IN:	X54P92A	NC00E10079944002	OUT:			FEAAB	FEFAB	FN116	406
[illegible]	[illegible]	[illegible]	[illegible]	[illegible]	[illegible]	[illegible]	[illegible]	[illegible]	[illegible]				[illegible]	[illegible]	[illegible]	[illegible]	[illegible]	[illegible]	FEAAB		FN116	[illegible]
[illegible]	[illegible]	[illegible]	[illegible]			[illegible]							[illegible]	[illegible]	[illegible]				[illegible]		[illegible]	
[illegible]	[illegible]	[illegible]	[illegible]	[illegible]	[illegible]	[illegible]	[illegible]	[illegible]	[illegible]			A	[illegible]	[illegible]	[illegible]	[illegible]			AAEAB		FN116	[illegible]
[illegible]	[illegible]	[illegible]	[illegible]	[illegible]	[illegible]	[illegible]									[illegible]		[illegible]	[illegible]	[illegible]		[illegible]	[illegible]
[illegible]	[illegible]	[illegible]	[illegible]	[illegible]	[illegible]	[illegible]	[illegible]	[illegible]	[illegible]				[illegible]	[illegible]	[illegible]	[illegible]	[illegible]	[illegible]	[illegible]		FN116	[illegible]
[illegible]	[illegible]	[illegible]	[illegible]	[illegible]	[illegible]	[illegible]	[illegible]	[illegible]	[illegible]				[illegible]	[illegible]	[illegible]	[illegible]	[illegible]	[illegible]	[illegible]		FN116	[illegible]
[illegible]	[illegible]	[illegible]	[illegible]	[illegible]	[illegible]	[illegible]	[illegible]	[illegible]	[illegible]				[illegible]	[illegible]	[illegible]	[illegible]	[illegible]	[illegible]	[illegible]		FN116	[illegible]
[illegible]	[illegible]	[illegible]	[illegible]	[illegible]	[illegible]	[illegible]	[illegible]	[illegible]	[illegible]				[illegible]	[illegible]	[illegible]	[illegible]	[illegible]	[illegible]	AAEAA	FEFAB	FN116	[illegible]
[illegible]	[illegible]	[illegible]	[illegible]	[illegible]	[illegible]	[illegible]	[illegible]	[illegible]	[illegible]				[illegible]	[illegible]	[illegible]	[illegible]	[illegible]	[illegible]			FN116	[illegible]
133	F2VC 9F924 AB	F2AC 28091 AA	NC00	60605	0	NC00E00444496521	B P R	92/01/21	VB	P	92	A	IN:	X54P92A	NC00E10112800400	OUT:	54P93A	NC00E00444496521	FEAAB		FN116	418
136	F2VC 9F924 AB	F2AC 28091 AA	NC00	60605	0	NC00E00444499552	B P R	92/03/24	VB	P	93	R	IN:	54P93A	NC00E00444496521	OUT:	54P93A	NC00E00444499552			FN116	419
137	F2VC 9F924 AB	F2AC 28091 AA	NC00	60605	0	NC00E00444499552	B P R	92/03/24	VB	P	93	A	IN:	54P93A	NC00E00444499552	OUT:	54P93A	NC00E00444499552	AAEAA		FN116	420

3713 6395

#	PART NUMBER	PIA	ACT	CNMC	# RELEASE	FOR R	RELEASE	VL A MY A	IN: CODE	NOTICE	OUT: CODE	NOTICE	MTC			
139	F2VC 9F924 AB F2AC	28091 BA	MC00	60605	0 MC00E00444499552	H P R	92/03/24	VB P 92	IN: X84F92A	MC00E10128004008	OUT: 84P93A	MC00E00444499521	FEAAB		FM114	421
141	F2VC 9F924 AB F2AC	28091 BA	MC00	60605	0 MC00E00444499425	H P R	92/07/21	VB P 92	IN: 84P93A	MC00E00444499552	OUT: 84P93A	MC00E10129983001	AAEAA		FM114	422
142	F2VC 9F924 AB F2AC	28091 BA	MC00	60605	0 MC00E00444499425	H P R	92/07/21	VB P 94	IN: 84P94A	MC00E10129983004	OUT: 84P95A	MC00E10129983004	AAEAA		FM116	423
143	F2VC 9F924 AB F2AC	28091 BA	MC00	60605	0 MC00E00444499625	H P R	92/07/21	VB P 9?	IN: 84P93A	MC00E1012[illegible]3001	OUT: 84P94A	MC00E1012[illegible]3004	AAEAA	FEAAB	FM115	424
[illegible]																426
152	F2VC 9F924 AB F2AC	28091 BA	MC00	60605	0 MC00E10128004008	H P R	91/08/29	VB P 92 A	IN: X84F92A	MC00E10128004008	OUT: 84P95A	MC00E10128004008	FEAAB		FM115	427
155	F2VC 9F924 AB F2AC	28091 BA	MC00	60605	0 MC00E10129983001	H P R	92/04/25	VB P 93 X	IN: 84P93A	MC00E00444499552	OUT: 84P93A	MC00E10129983001	AAEAA		FM116	428
[illegible]																429
157	F2VC 9F924 AB F2AC	28091 BA	MC00	60605	0 MC00E10129983001	H P R	92/04/25	VB P 92	IN: X84F92A	MC00E10128004004	OUT: 84P92A	MC00E00444499521	FEAAB		FM118	430
160	F2VC 9F924 AB F2AC	28091 BA	MC00	60605	0 MC00E10129983004	H P R	92/05/28	VB P 92	IN: 84P93A	MC00E00444499552	OUT: 84P93A	MC00E10129983001	AAEAA		FM116	431
161	F2VC 9F924 AB F2AC	28091 BA	MC00	60605	0 MC00E10129983004	H P R	92/06/26	VB P 94 A	IN: 84P94A	MC00E10129983004	OUT: 84P95A	MC00E10129983004	AAEAA		FM114	432
162	F2VC 9F924 AB F2AC	28091 BA	MC00	60605	0 MC00E10129983004	R P R	92/05/28	VB P 93 X	IN: 84P93A	MC00E10129983001	OUT: 84P94A	MC00E10129983004	AAEAA	FEAAB	FM116	433
163	F2VC 9F924 AB F2AC	28091 BA	MC00	60605	0 MC00E10129983004	H P R	92/05/26	VB P 92	IN: X84F92A	MC00E10128004008	OUT: 84P91A	MC00E00444499521	FEAAB		FM116	434
166	F2VC 9F924 AB F2AC	28091 BA	MC00	60605	0 MC00E10221001003	H P R	92/08/13	VB P 93	IN: 84P93A	MC00E00444499552	OUT: 84P93A	MC00E10129983001	AAEAA		FM115	435
167	[illegible]												AAEAA		FM115	436
[illegible]																
[illegible]																
[illegible]																
[illegible]																
174	F2VC 9F924 AB F2VC	28091 CC	MC00	60202	0 MC00E10129983000	R P R	92/04/02	VB P 92	IN: X84F92A	MC00E10184338001	OUT: 84P93A	MC00E10184338002	AAEAE		FM116	441
175	F2VC 9F924 AB F2VC	28091 CC	MC00	60202	0 MC00E10184338001	H P R	92/03/20	VB P 92 A	IN: X84F92A	MC00E10184338001	OUT: 84P93A	MC00E10184338001	AAEAE		FM118	442
176	F2VC 9F924 AB F2VC	28091 CC	MC00	60605	0 MC00E10128004002	H P R	91/07/31	VB P 92 A	IN: X84F92A	MC00E10128004002	OUT: 84P98A	MC00E10128004002	AAEAE		FM116	443
177	F2VC 9F924 AB F2VC	28091 CC	MC00	60645	0 MC00E10128004004	H P R	91/07/25	VB P 92 X	IN: X84F92A	MC00E10128004002	OUT: X84F92A	MC00E10128004004	AAEAS		FM116	444
178	F2VC 9F924 AB F2VC	28091 CC	MC00	60605	0 MC00E10128004004	H P R	91/07/25	VB P 92 A	IN: X84F92A	MC00E10128004004	OUT: 84P95A	MC00E10128004004	AAEAE		FM118	445
179	F2VC 9F924 AB F2VC	28091 CC	MC00	60605	0 MC00E10128004000	H P R	91/08/28	VB P 92	IN: X84F92A	MC00E10128004004	OUT: 84P98A	MC00E10128004004	AAEAE		FM115	446
180	F2VC 9F924 AB F2VC	28091 CC	MC00	60605	0 MC00E10184338000	R P R	92/02/11	VB P 92 R	IN: X84F92A	MC00E10128004004	OUT: 84P93A	MC00E10184338000	AAEAE		FM116	447
[illegible]													AAEAE			448
[illegible]																
[illegible]																
[illegible]																
236	F2VC 9F924 BA F2VC	2C520 BA	MC00	60605	0 MC00E10112620000	R P R	91/02/07	VB P 92 H	IN: 84P92A	MC00E10079844001	OUT: 84P92A	MC00E10112620000	AAEAA	FEAAA	FM115	460
237	F2VC 9F924 BB F2VC	28091 BA	MC00	60605	0 MC00E00444499328	H P R	91/01/14	VB P 92 A	IN: 84P92A	MC00E00444499328	OUT: X84F92A	MC00E00444499328	FEAAB	FEAAA	FM115	461
238	F2VC 9F924 BB F2VC	28091 BA	MC00	60605	0 MC00E00444499328	R P R	91/01/14	VB P 92 X	IN: 84P92A	MC00E10079844002	OUT: 84P92A	MC00E00444499328	FEAAB	FEAAB	FM116	462

3713 5396

Sheet1

#	INST	NUMBER		FIA		ACT	CPEC	S	RELEASE	FUN	R	RELEASE	VL	A	RY	A	IN:	CODE	NOPICK	OUT:	CODE	NOPICK	NFC			
239	F2VC	9F924	BB	F2VC	2B091	BA	MC00	60605	0	MC00E10044449320	R	P	R	91/01/18	VB	P	92	A	IN:	84F92A	MC00E10044449320	OUT:	X84F92A	MC00E10044449320	FEZNB		FN118	463
240	F2VC	9F924	BB	F2VC	2B091	BA	MC00	60605	0	MC00E10044449324	R	P	R	91/01/18	VB	P	92	A	IN:	84F92A	MC00E10044449324	OUT:	X84F92A	MC00E10044449324	FEZNB		FN118	464
241	F2VC	9F924	BB	F2VC	2B091	BA	MC00	60605	0	MC00E10044449326	R	P	R	91/01/18	VB	P	92	X	IN:	84F92A	MC00E10044449326	OUT:	84F92A	MC00E10044449326	FEZNB	FEZNA	FN118	465
242	F2VC	9F924	BB	F2VC	2B091	BA	MC00	60605	0	MC00E10044449328	R	P	R	91/01/18	VB	P	92	X	IN:	84F92A	MC00E10044449328	OUT:	84F92A	MC00E10044449328	FEZNB		FN118	466
[illegible]	[illegible]	[illegible]	[illegible]	[illegible]	[illegible]	[illegible]	[illegible]	[illegible]	[illegible]	[illegible]	[illegible]	[illegible]	[illegible]	[illegible]	[illegible]	[illegible]	[illegible]	[illegible]	[illegible]	OUT:						FN118	[illegible]
244	F2VC	9F924	BB	F2VC	2B091	BA	MC00	60605	0	MC00E10073844001	R	P	R	90/10/08	VB	P	92	R	IN:	84F92A	MC00E10073844000	OUT:	84F92A	MC00E10073844001			FN116	468
245	F2VC	9F924	BB	F2VC	2B091	BA	MC00	60605	0	MC00E10073844001	R	P	R	90/10/08	VB	P	92	A	IN:	84F92A	MC00E10073844001	OUT:	X84F92A	MC00E10073844001	FEZNB		FN116	469
246	F2VC	9F924	BB	F2VC	2B091	BA	MC00	60605	0	MC00E10073844002	R	P	R	90/10/08	VB	P	92	X	IN:	84F92A	MC00E10073844002	OUT:	84F92A	MC00E10073844002	FEZNB		FN116	470
247	F2VC	9F924	BB	F2VC	2B091	BA	MC00	60605	0	MC00E10073844002	R	P	R	90/10/08	VB	P	92	A	IN:	84F92A	MC00E10073844002	OUT:	X84F92A	MC00E10073844002	FEZNB	FEZNB	FN116	471
248	F2VC	9F924	BB	F2VC	2B091	BA	MC00	60605	0	MC00E10112000000	R	P	R	91/01/18	VB	P	92		IN:	84F92A	MC00E10044449328	OUT:	X84F92A	MC00E10044449328	FEZNB	FEZNA	FN116	472
249	F2VC	9F924	BB	F2VC	2B091	BA	MC00	60605	0	MC00E10112000000	R	P	R	91/01/18	VB	P	92		IN:	84F92A	MC00E10044449326	OUT:	X84F92A	MC00E10044449326	FEZNB		FN116	473
14	F2VC	9F924	AA	F2VC	2C320	AC	MC00	60605	0	MC00E10487567013	R	P	R	95/05/14	VC	P	98		IN:	84F98A	MC00E10487567013	OUT:			FEZNA		FN145	474
15	F2VC	9F924	AA	F2VC	2C320	AC	MC00	60605	0	MC00E10487567013	R	P	R	95/05/14	VC	P	98	A	IN:	84F98A	MC00E10487567013	OUT:			FEZNA	JNEXB	FN145	475
17	F2VC	9F924	AA	F2VC	2C320	AC	MC00	60605	0	MC00E10487567025	R	P	R	95/10/18	VC	P	98		IN:	84F98A	MC00E10487555000	OUT:			FEZNA		FN145	476
18	F2VC	9F924	AA	F2VC	2C320	AC	MC00	60605	0	MC00E10487567025	R	P	R	95/10/18	VC	P	98	R	IN:	84F98A	MC00E10487567013	OUT:	84F98A	MC00E10487567025	FEZNA	JNEXB	FN145	477
20	F2VC	9F924	AA	F2VC	2C320	AC	MC00	60605	0	MC00E10487002581	R	P	R	98/10/27	VC	P	99		IN:	84F98A	MC00E10487556000	OUT:			FEZNA		FN145	479
21	F2VC	9F924	AA	F2VC	2C320	AC	MC00	60605	0	MC00E10[illegible]	R	P	R	95/03/27	VC	P	98	A	IN:	84F98A	MC00E10487555000	OUT:	X84F98A	MC00E10[illegible]	FEZNA		FN145	478
23	F2VC	9F924	AA	F2VC	2C320	AC	MC00	60605	0	MC00E10487556000	R	P	R	95/03/21	VC	P	98	A	IN:	84F98A	MC00E10487555000	OUT:			FEZNA		FN145	480
451	F2AB	9F924	AA	F2AB	[illegible]	AA	MB00	100304	0	MB00E10[illegible]	R	P	R	95/12/[illegible]	VC	[illegible]	[illegible]	A	IN:	84F95A	MB00E10[illegible]	OUT:					FN141	481
454	F2AB	9F924	AA	F2AB	9F924	AA	MB00	100304	0	MB00E10[illegible]	R	P	R	96/04/14	VC	P	95	A	IN:	84F95A	MB00E10[illegible]	OUT:	84F95A	MB00E10[illegible]			FN141	482
458	F2DB	9F924	AA	F2DB	9F924	AA	MB00	100304	1	MB00E10056420009	R	P	R	98/07/16	VC	P	98	A	IN:	84F95A	MB00E10056420009	OUT:	X84F95A	MB00E10056420009			FN145	483
459	F2DB	9F924	AA	F2DB	9F924	AA	MB00	100304	1	MB00E10056420009	R	P	R	98/07/16	VC	P	98	E	IN:	84F95A	MB00E10625527000	OUT:	84F95A	MB00E10056420009			FN145	484
473	F2DB	9F924	AA	F2DB	9F924	AA	MB00	100304	1	MB00E10323914005	R	P	R	97/06/16	VC	P	98		IN:	84F95A	MB00E10625527000	OUT:					FN145	485
478	F2DB	9F924	AA	F2DB	9F924	AA	MB00	100304	1	MB00E10625527000	R	P	R	94/06/14	VC	P	98	A	IN:	84F95A	MB00E10625527000	OUT:					FN145	486
482	F2DB	9F924	AA	F2DB	9F924	AA	MB00	100304	1	MB00E10754985047	R	P	R	97/03/23	VC	P	98		IN:	84F95A	MB00E10625527000	OUT:					FN145	487
487	F2DB	9F924	AA	F2DB	9F924	AA	MB00	100304	1	MB00E10781817082	R	P	R	97/10/08	VC	P	98		IN:	84F95A	MB00E10625527000	OUT:					FN145	488
488	F2DB	9F924	AA	F2DB	9F924	AA	MB00	100304	1	MB00E10781817085	R	P	R	97/10/10	VC	P	98		IN:	84F95A	MB00E10625527000	OUT:					FN145	489
490	F2DB	9F924	AA	F2DB	9F924	AA	MB00	100304	1	MB00E10775852001	R	P	R	97/12/15	VC	P	98	E	IN:	84F95A	MB00E10625527000	OUT:	X84F95A	MB00E10775852001			FN145	490
500	XF17	9F924	AA	XF17	[illegible]	AA	XF17	[illegible]	6	MB00E10[illegible]	R	P	R	[illegible]	VC	P	[illegible]	A	IN:	[illegible]	MB00E1[illegible]	OUT:					FN145	491
[illegible]	[illegible]	[illegible]	[illegible]	[illegible]	[illegible]	[illegible]	[illegible]	[illegible]	[illegible]	[illegible]	[illegible]	[illegible]	[illegible]	[illegible]	[illegible]	[illegible]	[illegible]	[illegible]	[illegible]	[illegible]	[illegible]	[illegible]	[illegible]	[illegible]	[illegible]	[illegible]	[illegible]	[illegible]
492	FEZB	9F924	AB	FEZB	[illegible]	AC	[illegible]	[illegible]	[illegible]	[illegible]	R	P	R	[illegible]	VC	P	[illegible]	A	IN:	[illegible]	[illegible]	OUT:			GTDAB		[illegible]	494
[illegible]	[illegible]	[illegible]	[illegible]	[illegible]	[illegible]	[illegible]	[illegible]	[illegible]	[illegible]	[illegible]	[illegible]	[illegible]	[illegible]	[illegible]	[illegible]	[illegible]	[illegible]	[illegible]	[illegible]	[illegible]	[illegible]	[illegible]	[illegible]	[illegible]	[illegible]	[illegible]	[illegible]	[illegible]
[illegible]	[illegible]	[illegible]	[illegible]	[illegible]	[illegible]	[illegible]	[illegible]	[illegible]	[illegible]	[illegible]	[illegible]	[illegible]	[illegible]	[illegible]	[illegible]	[illegible]	[illegible]	[illegible]	[illegible]	[illegible]	[illegible]	[illegible]	[illegible]	[illegible]	GTDAB		[illegible]	497
495	FEZB	9F924	AB	FEZB	9F924	AB	MB00	100304	0	MB00E10406900000	R	P	R	94/07/[illegible]	VC	P	98	A	IN:	84F95A	MB00E10406900000	OUT:			GTDAB		[illegible]	498
497	FEZB	9F924	AB	FEZB	9F924	AB	MB00	100304	0	MB00E10[illegible]	R	P	R	96/04/05	VC	P	98		IN:	84F95A	MB00E10[illegible]	OUT:			GTDAB		[illegible]	499
499	FEZB	9F924	AB	FEZB	9F924	AB	MB00	100304	0	MB00E10[illegible]	R	P	R	97/06/16	VC	P	98		IN:	84F95A	MB00E10[illegible]	OUT:			GTDAB		[illegible]	500
447	FEZB	9F924	AB	[illegible]	[illegible]	AA	MB00	31900	0	MB00E10[illegible]	R	P	R	98/08/10	VC	P	[illegible]	A	IN:	84F95A	MB00E10[illegible]	OUT:			GTDAA		[illegible]	501
448	FEZB	9F924	AB	FEZB	[illegible]	AB	MB00	31900	0	MB00E10062439000	R	P	R	98/08/10	VC	P	99	A	IN:	84F95A	MB00E10062439000	OUT:			GTDAA		[illegible]	502
816	XB03	9F924	AA	XB03	9F924	AA	MB00	100304	0	MB00E10[illegible]	R	P	R	98/08/18	VC	P	99	A	IN:	X84F95A	MB00E10[illegible]	OUT:			GTDAB		[illegible]	503
818	XB03	9F924	AA	XB03	9F924	AA	MB00	100304	0	MB00E10[illegible]	R	P	R	98/01/20	VC	P	99		IN:	X84F95A	MB00E10[illegible]	OUT:			GTDAB		[illegible]	504

3713 5397

#	PART NUMBER			FTA		ACT	CMOC	S	RELEASE	TGM	R	RELEASE	VL	A	MT	A	IN:	CODE	NOTICE	OUT:	CODE	NOTICE	MFC	
104	F2VC	9F924	AB	F5VC	ZB091	AA	MC00	60202	D	MC00E1838750000	E	P	R	94/02/15					LDMO CONVERSION					505
105	F2VC	9F924	AB	F5VC	ZB091	AA	MC00	60202	D	MC00E1043808800	E	P	R	94/08/25					LDMO CONVERSION					506
106	F2VC	9F924	AB	F5VC	ZB091	AA	MC00	60202	D	MC00E1061525400	E	P	R	95/05/11					LDMO CONVERSION					507
107	F2VC	9F924	AB	F5VC	ZB091	AA	MC00	60202	D	MC00E1062458400	E	P	R	95/06/11					LDMO CONVERSION					508
[illegible]																								
110	F2VC	9F924	AB	F5VC	ZB091	AA	MC00	60202	D	MC00E1078893400	E	P	R	97/11/10					LDMO CONVERSION					511
126	F2VC	9F924	AB	F2AC	ZB091	BA	MC00	60202	D	MC00E1012994505	E	P	R	92/03/31					LDMO CONVERSION					612
127	F2VC	9F924	AB	F2AC	ZB091	BA	MC00	60202	D	MC00E1021242401	E	P	R	93/05/93					LDMO CONVERSION					613
128	F2VC	9F924	AB	F2AC	ZB091	BA	MC00	60202	D	MC00E1021242402	E	P	R	93/10/07					LDMO CONVERSION					614
129	F2VC	9F924	AB	F2AC	ZB091	BA	MC00	60202	D	MC00E1021242402	E	P	R	95/10/07					LDMO CONVERSION					615
321	F3TA	9F924	AA	F7UA	2C156	XD	XL00	60601	1	XL00E1074728400	R	P	R	97/09/19										516
322	F3TA	9F924	AA	F7UA	2C156	XD	XL00	60601	1	XL00I1059826619	E	P	R	97/08/23										517
323	F3TA	9F924	AA	F7UA	2C156	XD	XL00	60601	1	XL00I1073589006	E	P	R	97/07/02										618

3713 6308

F7UA	2A032	CA1		2
F7UA	2A032	DA		2
F7UA	2A032	DA1		2
F7UA	2A032	DA2		2
F7UA	2A032	DB		2
F7UA	2A032	DB1		2
F7UA	2A032	DC		2
F7UA	2A032	DD		2
F7UA	2A032	EA1		2
F7UA	2A032	EA2		2
F2AC	2B091	BA		2
F2VC	2B091	AA		2
F2VC	2B091	BA		2
F2VC	2B091	CA		2
F2VC	2B091	CB		2
F2VC	2B091	CC		2
F3LC	2B091	AA		2
F3LC	2B091	BA		2
F3LC	2B091	BB		2
F3LC	2B091	BC		2
F3VC	2B091	AA		2
F5VC	2B091	AA	LIMO	
F3DC	2B195	AA		2
F3DC	2B195	AB		2
F3DC	2B195	AC		2
F4DC	2B195	AA		2
F7UA	2C156	NA		2
F7UA	2C156	NB		2
F7UA	2C156	NB1		2
F7UA	2C156	NC		2
F7UA	2C156	ND		2
F2AC	2C320	CA		2
F2AC	2C320	CB		2
F2AC	2C320	CC		2
F2VC	2C320	AA		2
F2VC	2C320	BA		2
F3VC	2C320	AA		2
F3VC	2C320	BA		2
F4LC	2C320	AA		2
F4LC	2C320	AB		2
F5AC	2C320	BB		2
F5VC	2C320	AC		2
F6LC	2C320	AA		2
F5SJ	9A818	AA		2
F6SJ	9A818	AA		2
F6SJ	9A818	BA		2
XR3J.	9A818	AA		2
F2AC	9F924	AA		1
F2VC	9F924	AA		1

F2VC	9F924	AB	1	
F2VC	9F924	BA	1	
F2VC	9F924	BB	1	
F3DC	9F924	AA	1	
F3TA	9F924	AA	1	Y1
F3TA	9F924	BA		
F3TA	9F924	CA		
F5DB	9F924	AA	1	
F5SA	9F924	AA	1	
F5SA	9F924	AB	1	
F6DB	9F924	AA	1	
F6DB	9F924	AB	1	
F6LC	9F924	AA	1	
F6SB	9F924	AA	1	
F6SB	9F924	BA		
F6ZB	9F924	AA	1	
F6ZB	9F924	AB	1	
F8AB	9F924	AA	1	
F8DB	9F924	AA	1	
XF1T	9F924	AA		
XF1T	9F924	AB		
XF1T	9F924	AC	1	
XR33	9F924	AA	1	
XR63	9F924	AA	1	

	Lead	Contributing Factors							Manufacturing Study	Service Study	Part Availability
		Connector Seal	Kapton Seal	Continuous Power	Switch Orientation	Current Capability	Grounded Hexport	Plastic Parameters			
1 Coat cup with plastic or other non-conductive coating (like anodizing)	TI						□				
2 Make cup of non-conductive material	TI						□				
3 Add plastic diaphragm between cup/transfer pin and the spring contact/switch cavity	TI		□	□			□				
4 Place plastic insulator disk on the cup with hole only for the transfer pin	TI						□				
5 Replace kapton membranes with pure teflon membranes	TI		□								
6 Replace kapton seal with sliding piston seal	TI		□								
7 Change cup/converter topology	TI		□								
8 Replace switch with pressure transducer and semi-conductor switch	TI		■	□							
9 Design thermal link in power supply side of switch that opens at elevated temperature (one time or cycling)	TI			□		□					
10 Reverse polarity of switch contacts	TI			□							
11 Insulate/plastic coat spring except contact area	TI			□							
12 Gold plate spring contact	TI	□									
13 Fill air gap in switch housing with potting material to seal connector opening	TI	■									
14 Change switch housing material for improved ignition parameters	TI							□			
15 Add another layer to the kapton seal	TI		□								
16 Add ground fault interrupter circuit to switch circuit	TI/Ford			□		■	■				
17 Turn the sensor with connector down	Ford	□			□						
18 Add device to provide negative coefficient resistance with temperature rise	Ford										
19 Move switch to ground leg of the clutch coil	Visteon			□			■				Mar-00
20 Move switch to master cylinder	Ford				□						
21 Package switch on brake pedal bracket	Ford		■		□		■				
22 Add in-line fuse in switch circuit	Ford					□					
23 Relocate power source to RUN circuit	Ford			■							
24 Insulate switch body from proportioning valve	Ford					□	■				
25 Add boot to harness connector	UTA	□									
26 Add jumper harness to provide drip loop	UTA	□									

□ = Factor improved
■ = Factor fixed or eliminated

	Improve connector seal	Re-orient connector	Re-locate switch to brake pedal	Improve kapton diaphragm	Insert in-line fuse with switch	Add power off switch	Re-locate switch to ground side	Re-locate switch to RUN circuit	Insulate switch from prop valve	Use flame retardant plastic
Connector Seal	□	□	■							
Kapton Life			■	□						
Continuous Power					□	■	■	■	■	
Switch Orientation		□	■						□	
Current Capability					□	■	■		■	
Grounded Hex-port			■				■		■	
Plastic Parameters										□

■ = fixed
□ = improved

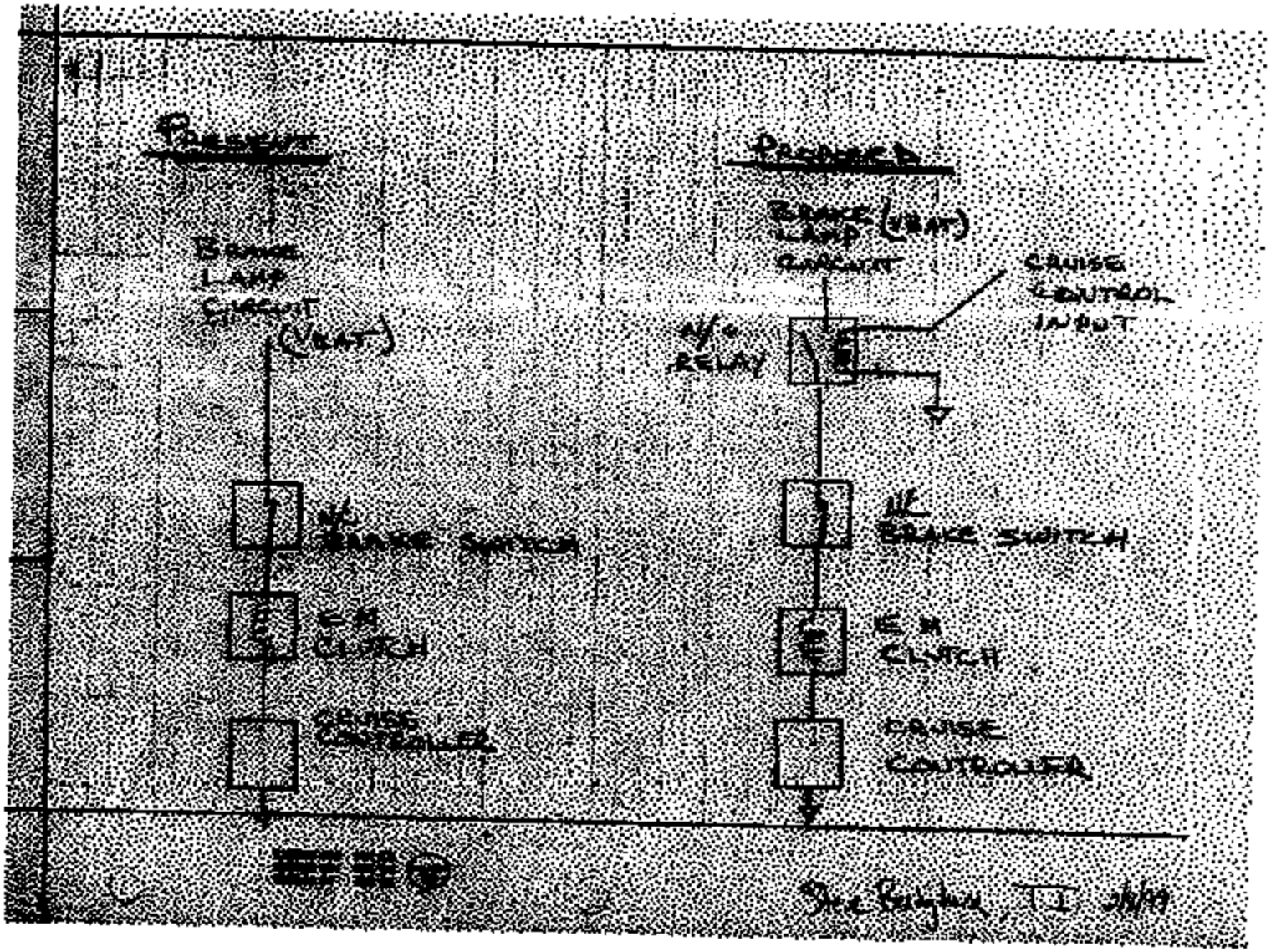
PRESENT
BRAKE LAMP CIRCUIT (VBAT)
BRAKE SWITCH
E.M. CLUTCH
CRUISE CONTROLLER
PROPOSED
BRAKE LAMP (VBAT) CIRCUIT
CRUISE CONTROL INPUT
N/O RELAY
N/C BRAKE SWITCH
E.M. CLUTCH
CRUISE CONTROLLER

Vehicle MY

Vehicle Location

Observer

VIN

Description of Switch Location

Wire Seal Material	Sponge	Silicon
Connector Seal Material	Sponge	Silicon
Picture of Overall Layout	☐	
2 - 3 Near Pictures	☐	

Observations:

Contamination around Switch

Contamination from Switch

Proximity to other plastic and rubber

Miscellaneous

Scenario

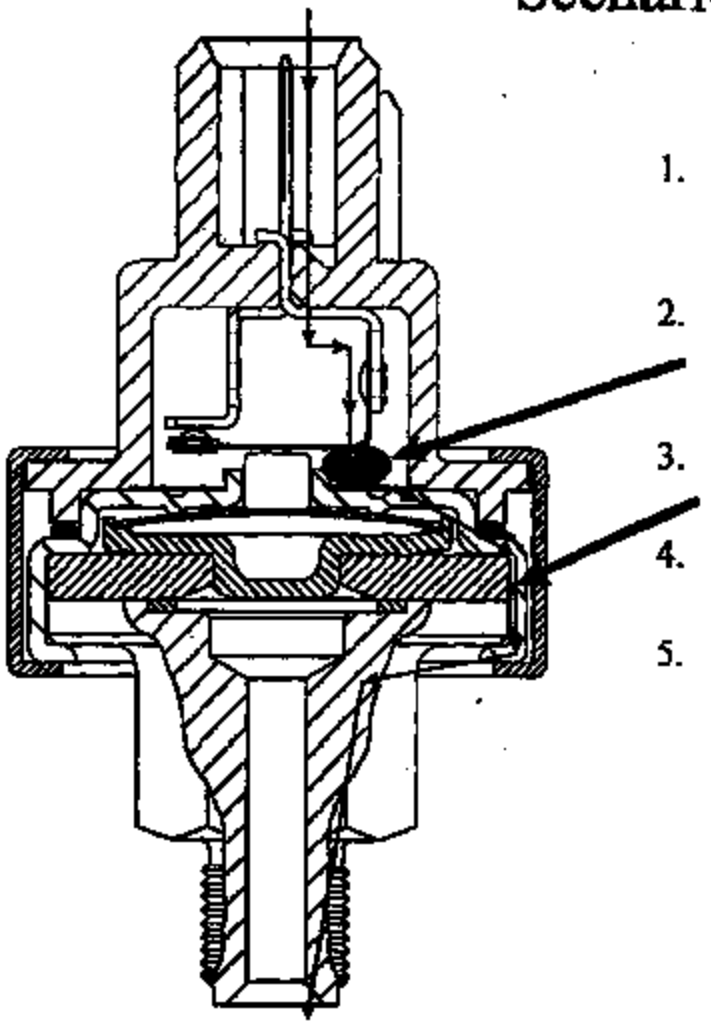

1. Contamination enters switch cavity through perforated kapton seal or connector seal.
2. Switch components and cup corrode with aid of electric field and contamination.
3. Current path forms between battery and ground.
4. Current increases as material builds until heat is generated to melt plastic.
5. When plastic melts enough to open the switch cavity to external air, the plastic ignites consuming the switch housing and connector.

TI Test

1. 5% salt water injected into switch cavity.
2. 12 volts applied across switch contacts until salt water boils off. (Draws 10 amps. This is not a normal condition.)
3. Repeat steps 1 and 2 two more times.
4. After third time, switch spring generates enough heat to melt and ignite switch housing.

3713 5406

Contributing Factors

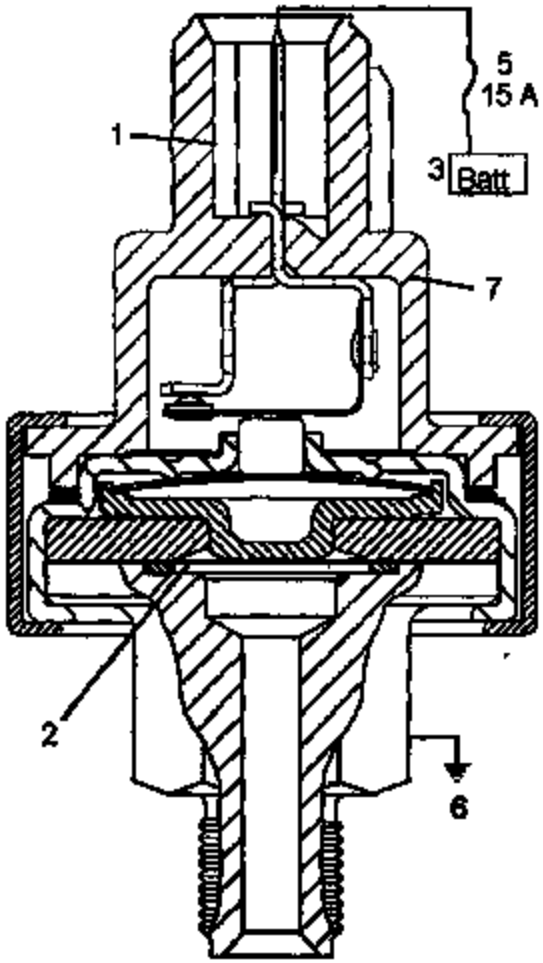

1. Connector Seal
2. Kapton Life
3. Continuous Power
4. Switch Orientation
5. Current Capability
6. Grounded Hex-Port
7. Plastic Parameters

9713 6407

Potential Actions

	Improve connector seal	Re-orient connector	Re-locate switch to brake pedal	Improve kapton diaphragm	Insert in-line fuse with switch	Add power off switch	Re-locate switch to ground side	Re-locate switch to RUN circuit	Insulate switch from prop valve	Use flame retardant plastic
Connector Seal	□	□	■							
Kapton Life			■	□						
Continuous Power					□	■	■	■	■	
Switch Orientation		□	■						□	
Current Capability					□	■	■		■	
Grounded Hex-port			■				■		■	
Plastic Parameters										□

■ = fixed
□ = improved

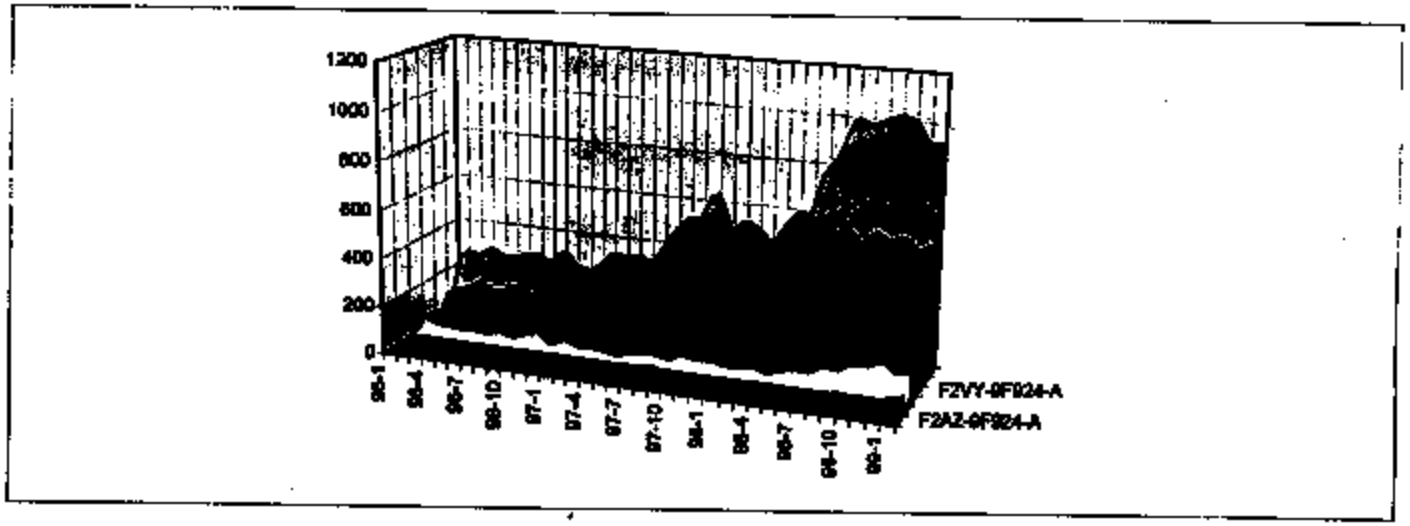
1200
1000
800
600
400
200
0
96-1
96-4
96-7
96-10
97-1
97-4
97-7
97-10
98-1
98-4
98-7
98-10
99-1
F2VY-9F924-A
F2AZ-9F924-A

3713 5409

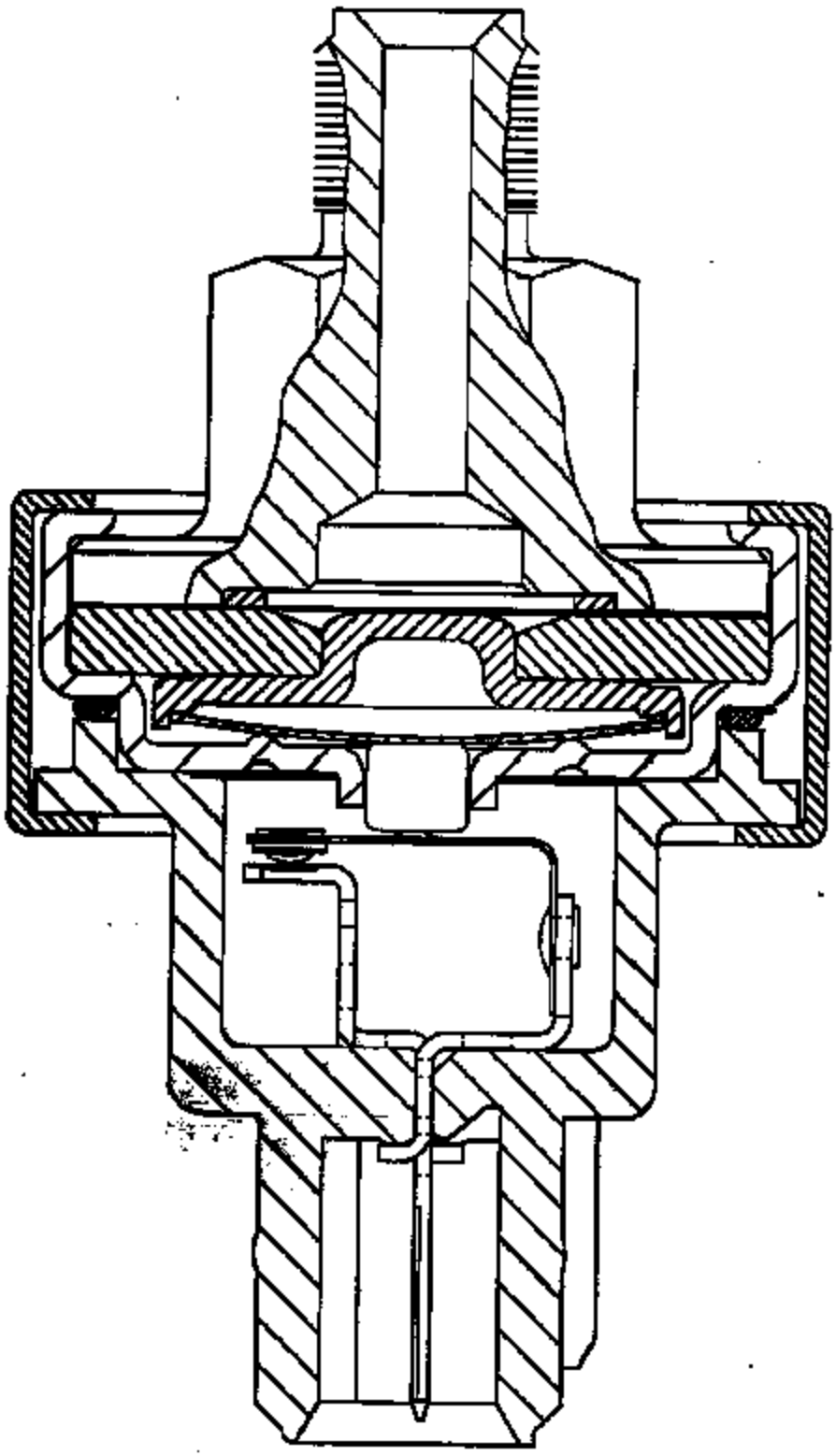

3713 5410

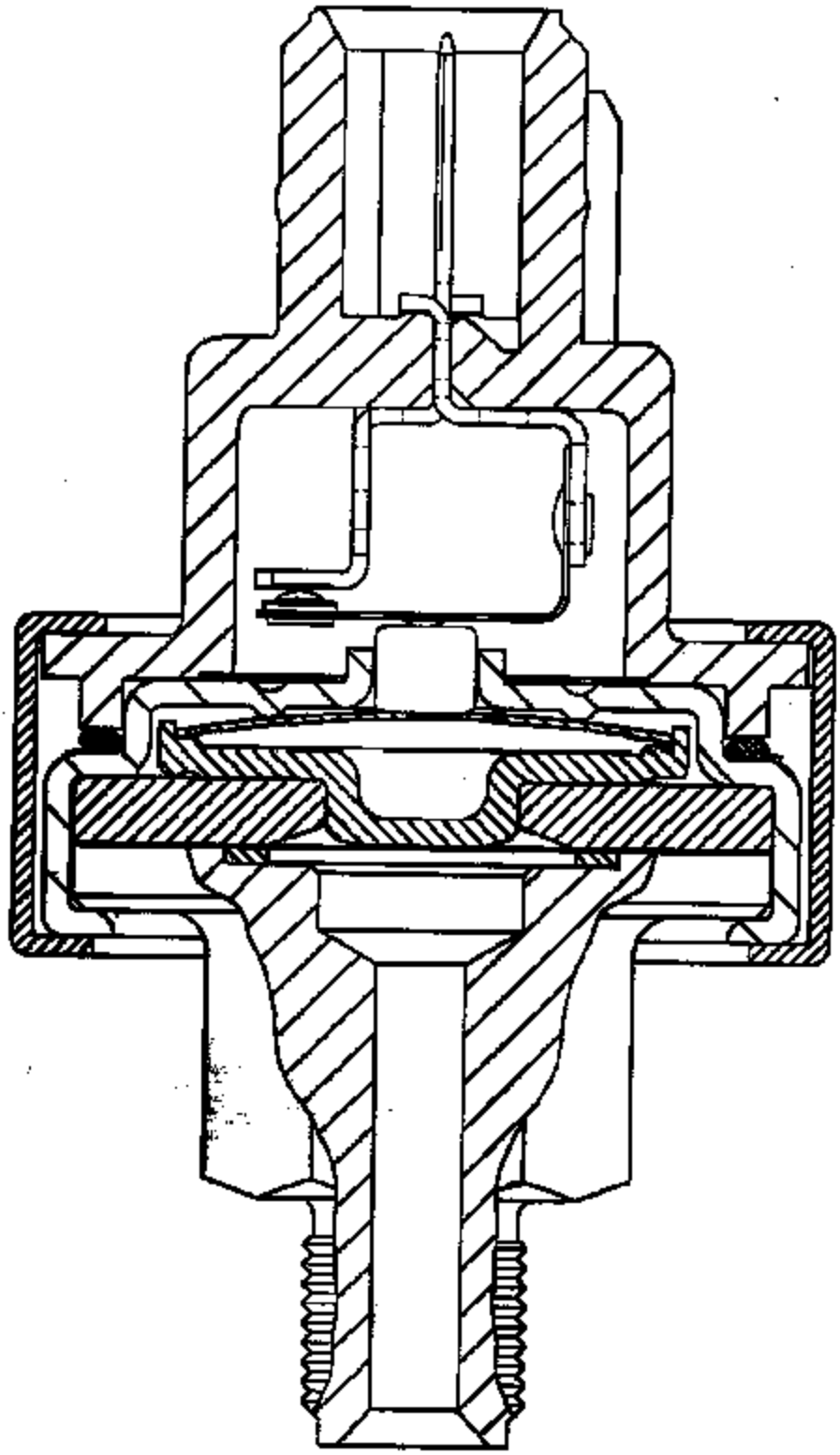

3713 5411

Data Log
Brake Pressure Switch

Log Updated 3/30/1999

Sw ID	Sw Date Code	Vehicle	VIN	Event	Mileage	Term-Hexport Resistance	Leaker?	Kapton #1	Kapton #2	Kapton #3	Present Status	Parts Received
Memphis	2058	Town Car	PY622977	Sw. Fire				crack	crack	crack	Analysis Complete	
A	2281	Town Car	PY665224	Underhood Fire				no info	no info	no info	Analysis Complete	
B	2114	Town Car	NY749129	Underhood Fire							Sw. not available	
C	2009	Town Car	NY709705	Underhood Fire							Analysis In Progress	
D		Crown Vic Police Car	VX149373	Cruise Inop		4.8MEGAOHMS	yes	crack	crack	crack	Analysis Complete	
E	2137	Town Car	NX758774	Reference		OPEN	no	worn, no crack	worn, no crack	worn, no crack	Analysis Complete	
F	2126	Town Car	NY760055	Cruise Inop		4MEGAOHM	yes	crack	crack	crack	Analysis Complete	
1	2008	Town Car	NX762658	Reference	79164	OPEN						
3	3015	Town Car	PY724043	Reference	71337	OPEN						
4	2049	Town Car	PY628170	Reference.	66087	OPEN						
5	2054	Town Car	py632329	Reference	98349						Analysis In Progress	
6	3025	Town Car	py728811	Reference	47328						Analysis In Progress	
7	2059	Town Car	NX729439	Reference	65922	OPEN						
8	3028	Town Car	PX140223	Reference	65614	OPEN						
9	2260	Town Car	PX637788	Reference	??	OPEN						
10	2281	Town Car	PY665375	Reference	62224	OPEN						
11	3028	Town Car	PY729069	Reference	61369	OPEN						
12	2223	Town Car	PX085270	Reference	86669	OPEN						
13	2080	Town Car	NY740309	Reference	93237	OPEN						
14	2071	Town Car	PX623672	Reference	94145	OPEN						
15	3061	Town Car	PY665374	Reference	??	OPEN						
16	??	Town Car	PY630994	Reference	97199	OPEN						
17	??	Town Car	PY650225	Reference	72114	OPEN						
18	2309	Town Car	PY658786	Reference		OPEN						
19	??	Town Car	PY774258	Reference	67549	OPEN						
20	??	Town Car	PY754675	Reference	42821	OPEN						
21	??	Town Car	PX643615	Reference	43521	OPEN						
22	2274	??	??	Reference	??							
23	??	Town Car	PX639934	Reference	66302	OPEN						
From TX trip of 2/10 to 2/12, John McInerney Group												
1	2026	Town Car	PY639990	Reference								
2	3053	Crown Vic Police Car	PX163920	Reference	169999							
3	3295	Grand Marquis	6D641666	Reference	??							
4	3025	Crown Vic	PX163312	Reference	40642							
5	2054	Town Car	PY610994	Reference	73115							

Steve Reimers, 313 39 03285,
sreimers@ford.com,
Bs SwitchLog.xls

printed 6/1/99 10:23 AM
uncontrolled document

revised 2/19/99

3713 5412

Data Log
Brake Pressure Switch

6	??	Town Car	NY724386	Underhood Fire	??							
7	3081	Town Car	PY760172	Reference	??							
8	2045	Town Car	NY733191	Underhood Fire		108610						
9	3026	Town Car	PY760186	Reference	??							
10	2272	Crown Vic	PX181140	Reference		72814						
11	2115	Town Car	NY757408	Reference	??							
12	3085	Town Car	PY742659	Reference	??							
13	3089	Town Car	PY753413	Reference		105048						
OASIS												
Baton Rouge, LA	2082	Town Car	PY600620	Dealership Retur		88005	yes	crack	crack	crack	Analysis In Progress	Switch
Memphis, TN	2128	Town Car	PY734410	Dealership Retur		156658	yes	crack	crack	crack	Analysis in Progress	Switch
EAA												
Davenport, FL	2080	Town Car	NY736847	Underhood Fire	100000+		?				Analysis in Progress	Switch
Aurora, IL	3089	Town Car	PY614095	Underhood Fire	?		?				Analysis In Progress	Switch, #12 15A Fuse
Naples, FL	?	Lincoln	NY705341	Underhood Fire		73925	?	crack	crack	crack		Brake Fluid Only

3713 5413

TI 77PS Test Synopsis

This document is a synopsis of tests conducted by Texas Instruments during the 77PS investigation. The intent of this document is to highlight test findings which drove the investigation to its current state. Throughout the investigation, several tests were conducted with the same objective. When each objective was met, efforts were refocused to obtain a new level of understanding and to establish a new set of objectives. As such, tests have been categorized into (5) levels, representing the level of knowledge obtained from the group of tests conducted. Each level is listed below with a short description of the objective:

Level 1: Create a laboratory switch ignition without any restrictions on methods.
Level 2: Create a laboratory switch ignition using only conditions found in the switch operating environment.
Level 3: Understand the laboratory ignition mechanism.
Level 4: Compare factors contributing to laboratory ignition.
Level 5: Evaluate recommendations.

Refer to Brake Pressure Switch Test Log.

Level 1 Objective: Determine if a switch ignition can be created in the laboratory.

- **Test 1**

Objective: Determine if switch ignition can occur under the following laboratory conditions:

Switch contact cavity flooded with brake fluid mixed with varying amounts of % H_2O.
14 volts applied to one terminal, second terminal electrically floating.
(No electrical load across switch terminals).
Switch hexport electrically grounded.

Results: (8) samples were tested total:
(2) with 4% H_2O in brake fluid.
(2) with 6% H_2O in brake fluid.
(2) with 10% H_2O in brake fluid.
(2) with 75% H_2O in brake fluid.

No ignition occurred. No significant temperature rise observed in all samples. Current draw ranged from 0.5 mAmps to 5 mAmps over a period greater than (250) hours.

- Test 2

Objective: Determine if switch ignition can occur under the following laboratory conditions:

> Switch contact flooded with brake fluid.
> 14 volts applied to one terminal, second terminal connected to a 14 Ω resistor which is tied to ground. (1 Amp load across switch terminals).
> Switch hexport electrically grounded.

Results: (2) samples were tested. No ignition occurred. No significant temperature rise observed for a period over (250) hours.

Conclusion: A (1) Amp load through switch terminals did not ignite brake fluid in the contact cavity of switches.

- Test 6

Objective: Determine if switch ignition can occur under the following laboratory conditions:

> Heater element installed in contact cavity of the switch.
> Power applied to the heater element until plastic base melts.
> Spark generated in contact cavity of switch.
> Brake fluid present in the contact cavity (wet device) and absent in the contact cavity (dry device).

Results: (2) dry devices were tested and (1) wet device was tested. Ignition occurred in all devices.
Wet device: The internal temperature of a wet device reached 660oF. A hole burned through the base of the switch (close to the heating element). The applied spark ignited the fumes in the contact cavity of the switch and engulfed the base material of the switch.
Dry device: The internal temperature of a dry switch reached over 1000oF. The switch base flopped over. The applied spark ignited the fumes in the contact cavity of the switch and engulfed the base material of the switch.

Conclusion: A switch ignition can occur under the following laboratory conditions:

> Heater element installed in the switch contact cavity.
> 5 watts of power dissipated in heating element.

Spark generated in the contact cavity of the switch.

Brake fluid did not contribute to the ignition process.

Level 2: Objective: Determine if a laboratory ignition can occur using only switch components and elements found in the switch environment.

- **Test 6a**

Objective: Determine if corrosive degradation of switch electrical components can cause an increase in electrical resistance (and thus a source of heat) in the switch, which may lead to an ignition.

Results: (1) out of (15) samples tested increased resistance to 5 Ωs. A solution of 5 wt. % NaCl in H_2O can corrode the electrical components of the switch and cause an increase in electrical resistance. Repeated injections of the solution of 5 wt. % NaCl in H_2O into the contact cavity of a switch, with the switch continuously powered at 14 Volts, can cause an ignition.

Conclusion: A switch ignition can occur under the following laboratory conditions:

A solution of 5% NaCl in H_2O is injected into contact cavity of a switch.
Continuous 14 Volt power applied to the switch.
Hexport is grounded.
Current is limited at 15 Amps.

- **Test 6c**

Objective: Determine if brake fluid with metal shavings is conductive enough to create an ignition.

Results: (3) devices with various size metal particles were tested. No significant current increase detected.

Conclusion: Metal shavings did not significantly increase conductivity brake fluid. Current levels measured were well below levels necessary to create an ignition.

- **Test 7**

Objective: Determine if switch meets cycle life specification.

3713 5416

Results: Tests conducted during the first quarter of 1999 show that switches exceed cycle life specification.
In the first quarter of 1999, a total of (42) 77PSL2-1 snap switches were impulse tested to over 1,000,000 cycles with only (1) leak below 1,000,000 cycles, which occurred at 728,000 cycles. A Weibull analysis showed 99.9% reliability at 500,000 cycles at 95% confidence level.

Conclusions: Switches meet cycle life specification. First quarter, 1999 tests confirm impulse test findings made during the period between 1991 and 1992. During that period, (6) impulse tests on 144 devices of 57PS and 77PS construction, had no leaks when tested to 500,000 cycles. A Weibull analysis of first quarter, 1999 tests, showed 99.9% reliability at 500,000 cycles at 95% confidence level.

- Test 15a

Objective: Determine the long term corrosive effects of brake fluid on the electrical components of switches which are continuously powered at 14 Volts.

Results: Test was suspended after 550 hours of testing. (6) samples were tested with continuous 14 Volts power. The contact cavity of (4) switches contained new brake fluid and (2) switches contained old brake fluid. Switches with old brake fluid drew very little hexport current and showed a decrease in hexport current over time to less than 1/10 mAmp. Samples with new brake fluid showed an increase in hexport current to over 20 mAmps toward the end of the 550 hours of testing. Analyses of (1) sample with new brake fluid and (1) sample with old brake fluid revealed electrolytic corrosion of the contact arm of both switches. There was a much lower level of corrosion in the sample with used brake fluid than the sample with new brake fluid.

Conclusion: Brake fluid in the contact cavity of switches, which are at 14 Volts continuous power for over 500 hours, can cause electrolytic corrosion of the switch contact arm and an increase in hexport current.

- Test 17

Objective: Quantify the long term corrosive effects of new brake fluid on the electrical components of switches under the following laboratory conditions:

Contact cavity of switch flooded with new brake fluid.
Switches at continuous 14 Volts power.
Switches subjected to vibration for (1) hour per day.
Switches subjected to 100oC for (1) hour per day.

Results: Test suspended after (312) hours. (50) samples tested. The average hexport current draw after (312) hours is 1.9 mAmps with a standard deviation of 1.8 mAmps. These results are consistent with results previously found in Test 15a at the 300 hour point.

Conclusion: New brake fluid in the contact cavity of switches, has not caused an increase in hexport current after (312) hours at continuous 14 Volts power.

Level 3: Objective: Understand the laboratory ignition process, determine the current path and establish a repeatable ignition method.

- Test 6b

Objective: Understand the ignition process, determine the current path and establish a repeatable ignition method.

Results: Multiple attempts at laboratory ignition, via injection of a solution of 5 wt. % NaCl in H_2O into the contact cavity of switches, has resulted in a repeatability rate of approximately 50%. Plots of hexport current verses time show an increase in current until the point of ignition.

Conclusion: A repeatable laboratory method for switch ignition was established. Based on hexport current measurements, the current path is from switch terminals to hexport body.
When a solution of 5 wt. % NaCl in H_2O is repeatedly injected into the contact cavity of powered switches, electrolytic corrosion of the switch terminal results in an increase in terminal resistance. When sufficient power is drawn through the corrosive resistance, switch elements heat up and begin to glow red hot. A hole burns through the switch base and ignition occurs. There is arcing visible throughout the corrosion process which may provide the spark necessary for ignition.

Level 4: Objective: Compare and contrast variables influencing ignition using the established laboratory ignition method.

- Test 13a

Objective: Compare various fluids in the established ignition method.

Results: The following fluids were tested.
(1) NaCl in H_2O.
(1) tap water

(1) rain water
(1) used brake fluid
(1) used brake fluid with 5 wt. % H_20
(1) new brake fluid
(1) new brake fluid with 5 wt. % H_20
The switch filled with 5 wt. % NaCl in H_20 resulted in an ignition when average hexport current exceeded 2.5 Amps. Switches that were filled with tap water and rain water drew less than 10 mAmps over a (3) hour test and showed little signs of corrosion. Switches filled with a matrix of new and used brake fluids, with water and without water, all drew less than 3 mAmps hexport current draw and showed no signs of corrosion over the (24) hour test.

Conclusion: Brake fluid is not conductive enough to cause the electrolytic corrosion and necessary current draw to create an ignition within a 3 hour lab test. Because of its' significantly higher conductivity, an ionic rich fluid such as NaCl in H_20 can cause an ignition in a 3 hour lab test exposure..

- Test 15

Objective: Compare the ignition characteristics of various plastics as switch base material.

Results: When 5 wt. % NaCl in H_20 was injected into switches with different base materials, the following results were obtained: Cellanex 4300 ignited 3 out of 5 attempts. Noryl ignited 2 out of 5 attempts. Zytel ignited 1 out of 5 attempts.

Conclusions: All plastics tested can ignite using the established laboratory ignition method.

- Test 15b

Objective: Determine if switch ignition can occur in the vertical position and 45$_o$ orientation. Determine if switch ignition can occur and at different rotational angles in the 45$_o$ orientation.

Results: Switch ignitions can occur in both the vertical and 45$_o$ orientation using the established laboratory ignition method.

Conclusion: Switch ignition does not appear to be sensitive to vertical orientation versus 45$_o$ orientation nor to rotational angle in the 45$_o$ orientation.

Level 5 Objective:

3713 5419

Test 16

- Objective: Test proposed relay circuit.

Results: (1) switch was injected with a solution of 5 wt. % Nacl in H_20 and placed in the proposed current limiting circuit for (48) hours. The current draw remained constant at 180 mAmps throughout the test. There was no activity observed and the contact arm remained mostly intact.
(1) switch was brought to an impending burn condition using the established burn method. An impending burn is a condition where a corrosive resistance has built up in the switch and an ignition is imminent. The switch was then placed in the proposed relay circuit for(18) hours where it drew 160 mAmps, showed no visible activity and did not result in an ignition.
Because the proposed relay circuit acts as a resistor which limits current to the switch, the maximum power to the switch is limited to .75 Watts. A resistive wire was wrapped around the base of (1) switch and 0.75 Watts of power was dissipated in the wire. The wire became warm to the touch but had no effect on the switch.

Conclusion: 0.75 Watts, the maximum power in the proposed circuit design, is insufficient to cause substantial electrolytic corrosion or significant switch terminal heating, which is necessary to create an ignition. In previous tests, using a resistor as the heating element (see Test 6), approximately 5 Watts of power was necessary to create an ignition.

3713 5420

Brake Pressure Switch Test Log
Updated August

Category	Test	Location	Test Procedure	Results Update
[illegible]	1	[illegible]	[illegible]	[illegible]
[illegible]			[illegible]	[illegible]
[illegible]			[illegible]	[illegible]
				[illegible]
	2	[illegible]	[illegible]	[illegible]
			[illegible]	[illegible]
				[illegible]
	3	AVT	[illegible]	[illegible]
			[illegible]	[illegible]
	4	AVT	[illegible]	[illegible]
			[illegible]	[illegible]
	5	AVT	[illegible]	[illegible]
			[illegible]	[illegible]
	5a	AVT	[illegible]	[illegible]
			[illegible]	[illegible]
	6	[illegible]	[illegible]	[illegible]
			[illegible]	[illegible]
			[illegible]	[illegible]
			[illegible]	[illegible]
			[illegible]	[illegible]
	6a	[illegible]	[illegible]	[illegible]
			[illegible]	[illegible]
[illegible]	7	[illegible]	[illegible]	[illegible]
[illegible]			[illegible]	[illegible]
[illegible]	8	[illegible]	[illegible]	[illegible]
[illegible]	8	Control Lab	[illegible]	[illegible]
[illegible]	10	[illegible]	[illegible]	[illegible]
[illegible]			[illegible]	[illegible]
[illegible]				
			12 snap switches and 5% water in the brake fluid	in the spot paint.
			12 quad switches and 0% water in the brake fluid.	
			12 snap switches 5% water in the brake fluid	
			12 quad switches 5% water in the brake fluid.	
			[illegible]	
[illegible]	11	AVT	[illegible]	[illegible]
[illegible]			[illegible]	
[illegible]			[illegible]	
[illegible]	12	Control Lab	[illegible]	[illegible]
			[illegible]	[illegible]
			[illegible]	
			[illegible]	
[illegible]	13	Control Lab	[illegible]	[illegible]
[illegible]			[illegible]	[illegible]
[illegible]				

3713 5426

Brake Pressure Switch Test Log, Updated 4/26/99

Category	Test	Location	Test Parameters	Results Update
Lab Simulation	1	TI	Vary water concentrations in 'new' Brake Fluid	250+ hours, Current draw in the 0.5mA to 6mA range
of Potential Ignition			14Vdc to one terminal, hexport grounded	Fluid has discolored.
in Switch			Water Conc: 0%, 4%, 6%, 10%, 75%	No Significant Temperature Rise. Test Suspended.
				Internal Analysis suspended.
	2	TI	Vary water concentrations in 'new' Brake Fluid	250+ hours. Constant temperature.
			1 Amp through switch terminals	No significant temperature rise with time
				Test Suspended.
	3	AVT	new' Brake Fluid in Switch, 24 VDC to one	> 300 hours into test, max current 7mA
			terminal. Hexport Grounded	No significant change with time. Test ongoing
	4	AVT	new' Brake Fluid in Switch, 24 VDC to one	18 hours into test max current 5mA
			terminal. Hexport Grounded, Ambient at 100 C	No significant temperature rise with time. Test suspended.
	5	AVT	new' Brake Fluid in Switch, 18 Amps	Temperature rise of 20 C above room temp
			Through switch terminals	Delta T reached steady state at 20 C. Test suspended.
	5a	AVT	new' Brake Fluid in Switch approx. 60 Amps	Temperature rose to approx. 270 F. No smoke. No ignition
			through Switch Terminals	Test suspended.
	6	TI	Build heater elements into Switch.	2 tested. Smoke observed, ignition observed on part wheater
			Heat till failure, include sparking.	See attachment
			With Fluid & Dry	Test complete
			Pure 'new' brake fluid with metal shavings	Brake fluid in cavity slows down heat build-up
			6% brake fluid solution	Smoke observed at 675 F, Base melts and falls off at 800 F
	6a	TI	Create heater by corroding spring arm	One out of 15 devices increased resistance to 5 ohms.
			Salt water solution, 14V between spring	Others either very low resistance or megaohms
			and hexport	It took about 100 hours to reach the 5 ohm stage.
				The 5 ohm device ignited under conditions similar to test 6.
	6b	TI	Re-run ignition test to understand	Switch ignition with repeated 5% water solution into switch
			repeatability and current path.	Current path is through hexport.
				See plots and video.

3713 6427

Brake Pressure Switch Test Log, Updated 4/26/99

				Additional test include tap water, old BF, new BF and other.
Life Cycle Reliability	7	TI	0-1400 psig pressure pulses at 135C	First leak observed at 726,000 cycles.
of Pressure Switch			per ES	Test Completed. See attached Weibull Chart.
Diaphragm Wear	8	TI	0-1400 psig pressure pulses at 135C.	Parts withdrawn every 200k cycles, characterized for wear
Field vs Lab Correlation	9	Central Labs	Field returns, from dealer lots, junkyards	Parts in Central Labs, see Ford spreadsheet
Design Of Experiments (1)	10	TI	Vary water concentrations in 'new' Brake Fluid	Test Report being written investigation continues.
Evaluating Factors			12 snap + 12 quiet switches w/ 0 % water in BF	Suspended at 1.3 million cycles with no leaks observed.
Effecting Diaphragm Wear			12 snap + 12 quiet switches w/ 5 % water in BF	Snap samples suspended at 1.3 million cycles with 2 leaks
Impulse test				observed at 1.3M. Quiet samples suspended at 500k cycles to
				assess featuring anomalies.
On-Vehicle Characterization	11	AVT	Monitor Pressure and Temperature	Test at AVT.....see Ford charts...>600k in car?
of Pressure & Temperature			at Switch Location for ABS and non-ABS	
Profile in Town Car			braking events.	
Brake fluid analysis	11a	TI	Analyze used brake fluid at the master cylinder	Test complete.
Used fluid at master cylinder.			(UMC), used brake fluid at the caliper (UCA)	UMC: Cu = 410 (ug/ml), Fe = 5.6 (ug/ml), Cr = 0.08 (ug/ml), 1.1 %H20.
			and new brake fluid (NEW) for metal and water	UCA: Cu = 502 (ug/ml), Fe = 5.6 (ug/ml), Cr = 1.9 (ug/ml), 1.1 %H20.
			content.	NEW: Cu = <0.01 (ug/ml), Fe = 0.92 (ug/ml), Cr = <.01 (ug/ml), 0.3 %H20.
Spark /Arc Study	12	Central Labs	Determine if arc/spark forms in switch	Equipment set-up in progress at Central Labs.
			using clutch loads and high speed video.	TI Experimented with so 'significant' sparks observed
			Use dry switches as well as switches with	
			various brake fluid water mixes.	
Characterization of	13	Central Labs	Characterize electrical, mechanical	Data log and analysis procedure set up complete.
switches retrieved from field			and chemical aspects of returned switches	Analysis of switches in progress.
junkyards & other sources				
Field Ingress Tests	13a	TI	Repeat ignition simulation with different fluids.	Test complete.
			63 hour tests:	5% NaCl sample resulted in an ignition.
			5% NaCl in tap water	All brake fluid samples drew less than 3 mAmps. No corrosion
			tap water	visible on brake fluid samples.
			rain water	Rain water and tap water samples drew <10 mAmps and showed

3713 5428

			(48) hour tests:	some signes of corrosion.
			used brake fluid	Chemical anlysis in process.
			used brake fluid w/ 5% H_2O	
			new brake fluid	
			new brake fluid w/ 5% H_2O	
Design Of Experiments (2)	13b	TI	Vary water concentrations in 'new' Brake Fluid	Test suspended. Analysis in process to assess test fixturing.
Repeat of test 10			10 snap + 20 quiet switches w/ 0 % water in BF	
			10 snap + 20 quiet switches w/ 5 % water in BF	
Compatibility of Kapton	14	Dupont	Characterize change in properties of Kapton	Report expected from Dupont by 5/3/99.
with Oxalic Acid			with various % oxalic acid in brake fluid.	
Evaluation of Plastic	16	TI	Assess properties and moldability of different	Test suspended.
Materials with Improved			grades of plastic resin with advanced	Celanese and Nylyl ignited 3/5 and 2/5 trials
Parameters			to improve plastic part performance	ZYTEL samples tested 1/5 ignitions
Long duration brake fluid	16a	TI		Test in progress. (16) days to date.
ingress test.				Used brake fluid current dropped off to <1/10 mAmp.
				New brake fluid hexport current remains low
Evaluation of Switch	15b	TI	Assess ignition sensitivity to switch orientation.	Test complete. Ignition is independent of switch orientation.
Orientation			Test vertical versus 45 degree	simulated switch ignition can occur in vertical or 45 degree angle.
			Test rotational sensitivity	Ignition appears not sensitive to switch rotational alignment
Relay Circuit	18	TI	Repeat test 13a in Ford relay circuit for (48) hrs.	Test complete. No ignition. Corrosion rate drastically reduced.
Test			Bring switch to impending ignition in (15) Amp	insufficient power in circuit to create or move toward ignition in lab
			circuit then place in relay circuit for (16) hrs.	Heater element was warm to the touch.
			input max. circuit power into heater on switch.	

3713 5429

Brake Pressure Switch Test Log, Updated 4/28/99

Category	Test	Location	Test Parameters	Results Update
Lab Simulation	1	TI	Vary water concentrations in 'new' Brake Fluid	250+ hours, Current draw in the 0.5mA to 5mA range
of Potential Ignition			14Vdc to one terminal, hexport grounded	Fluid has discolored.
in Switch			Water Conc. 0%, 4%, 6%, 10%, 75%	No Significant Temperature Rise. Test Suspended.
				Internal Analysis suspended.
	2	TI	Vary water concentrations in 'new' Brake Fluid	250+ hours. Constant temperature.
			1 Amp through switch terminals	No significant temperature rise with time
				Test Suspended.
	3	AVT	new' Brake Fluid in Switch, 24 VDC in one	> 300 hours into test. max current 7mA
			terminal. Hexport Grounded	No significant change with time. Test ongoing
	4	AVT	new' Brake Fluid in Switch, 24 VDC to one	16 hours into test max current 6mA
			terminal. Hexport Grounded, Ambient at 100 C	No significant temperature rise with time. Test suspended.
	5	AVT	new' Brake Fluid in Switch, 16 Amps.	Temperature rise of 20 C above room temp
			Through switch terminals	Delta T reached steady state at 20 C. Test suspended.
	5a	AVT	new' Brake Fluid in Switch approx. 50 Amps	Temperature rose to approx. 270 F. No smoke. No ignition
			through Switch Terminals	Test suspended.
	6	TI	Build heater elements into Switch.	2 tested. Smoke observed, ignition observed on part wheater
			Heat till failure, include sparking.	See attachment
			With Fluid & Dry	Test complete
				Brake fluid in cavity slowly [illegible]
				Smoke observed at 675 F, Base melts and falls off at 800 F
	6a	TI	Create heater by corroding spring arm	One out of 15 devices increased resistance to 5 ohms.
			Salt water solution, 14V between spring	Others either very low resistance or megaohms
			and hexport	It took about 100 hours to reach the 5 ohm stage.
				The 5 ohm device ignited under conditions similar to test 6.
	6b	TI	Re-run ignition test to understand	Switch ignition with repeated 6% water solution into switch
			repeatability and current path.	Current path is through hexport.
				See plots and video.

3713 5430

Brake Pressure Switch Test Log, Updated 4/28/99

				Additional test include tap water, old BF, new BF and other.
	6c	TI	Pure 'new' brake fluid with metal shavings	Metal shavings do not contribute significantly to brake fluid conductivity
Life Cycle Reliability of Pressure Switch	7	TI	0-1400 psig pressure pulses at 135C per ES	First leak observed at 728,000 cycles. Test Completed. See attached Weibull Chart.
Diaphragm Wear	8	TI	0-1400 psig pressure pulses at 135C.	Parts withdrawn every 200k cycles, characterized for wear
Field vs Lab Correlation	9	Central Labs	Field returns, from dealer lots, junkyards	Parts in Central Labs, see Ford spreadsheet
Design Of Experiments (1) Evaluating Factors Effecting Diaphragm Wear Impulse test	10	TI	Vary water concentrations in 'new' Brake Fluid 12 snap + 12 quiet switches w/ 0 % water in BF 12 snap + 12 quiet switches w/ 5 % water in BF	Test Report being written Investigation continues. Suspended at 1.3 million cycles with no leaks observed. Snap samples suspended at 1.3 million cycles with 2 leaks observed at 1.3M. Quiet samples suspended at 500k cycles to assess fixturing anomalies.
On-Vehicle Characterization of Pressure & Temperature Profile in Town Car	11	AVT	Monitor Pressure and Temperature at Switch Location for ABS and non-ABS braking events.	Test at AVT.....see Ford charts...>500k in car?
Brake fluid analysis Used fluid at master cylinder.	11a	TI	Analyze used brake fluid at the master cylinder (UMC), used brake fluid at the caliper (UCA) and new brake fluid (NEW) for metal and water content.	Test complete. UMC: Cu = 415 (ug/ml), Fe = 5.6 (ug/ml), Cr = 0.08 (ug/ml), 1.1 %H20. UCA: Cu = 592 (ug/ml), Fe = 5.5 (ug/ml), Cr = 1.9 (ug/ml), 1.1 %H20. NEW: Cu = <0.01 (ug/ml), Fe = 0.92 (ug/ml), Cr = <.01 (ug/ml), 0.3 %H20.
Spark /Arc Study	12	Central Labs	Determine if arc/spark forms in switch using clutch loads and high speed video. Use dry switches as well as switches with various brake fluid water mixes.	Equipment set-up in progress at Central Labs. TI Experiments with no significant sparks observed
Characterization of switches retrieved from field junkyards & other sources	13	Central Labs	Characterize electrical, mechanical and chemical aspects of returned switches	Data log and analysis procedure set up complete. Analysis of switches in progress.
Fluid Ingress Tests	13a	TI	Repeat ignition simulation with different fluids.	Test complete.
			(3) hour tests:	5% NaCl sample resulted in an ignition.

3713 5431

			5% NaCl in tap water	All brake fluid samples draw less than 3 mAmps. No corrosion
			tap water	visible on brake fluid samples.
			rain water	Rain water and tap water samples draw <10 mAmps and showed
			(48) hour tests:	some signes of corrosion.
			used brake fluid	Chemical analysis in process.
			used brake fluid w/ 5% H_2O	
			new brake fluid	
			new brake fluid w/ 5% H_2O	
Design Of Experiments (2)	13b	TI	Vary water concentrations in 'new' Brake Fluid	Test suspended. Analysis in process to assess test fixturing.
Repeat of test 10			10 snap + 20 quiet switches w/ 0 % water in BF	
			10 snap + 20 quiet switches w/ 5 % water in BF	
Compatibility of Kapton	14	Dupont	Characterize change in properties of Kapton	Report expected from Dupont by 5/3/99.
with Oxalic Acid			with various % oxalic acid in brake fluid.	
Evaluation of Plastic	15	TI	Assess properties and moldability of different	Test suspended.
Materials with improved			grades of plastic resin with additives	Celanese and Noryl ignited 3/5 and 2/5 trials
Parameters			to improve plastic part performance	ZYTEL samples tested 1/5 ignitions
Long duration brake fluid	15a	TI		Test in progress. (15) days to date.
ingress test.				Used brake fluid current dropped off to <1/10 mAmp.
				New brake fluid [illegible]
Evaluation of Switch	15b	TI	Assess ignition sensitivity to switch orientation	Test complete. Ignition is less probable at switch orientation
Orientation			Test vertical verses 45 degree.	simulated switch ignition can occur in vertical or 45 degree angle.
			Test rotational sensitivity.	Ignition appears not sensitive to switch rotational alignment.
Relay Circuit	16	TI	Repeat test 13a in Ford relay circuit for (48) hrs.	Test complete. No ignition. Corrosion rate drastically reduced.
Test			Bring switch to impending ignition in (16) Amp	Insufficient power in circuit to create or move toward ignition in lab
			circuit then place in relay circuit for (16) hrs.	Heater element was warm to the touch.
			Input max. circuit power into heater on switch.	

3713 5432

Brake Pressure Switch Test Log, Updated 5/1/99

Category	Test	Location	Test Parameters	Results Update
Lab Simulation	1	TI	Vary water concentrations in 'new' Brake Fluid	260+ hours, Current draw in the 0.5mA to 5mA range
of Potential Ignition			14Vdc to one terminal, hexport grounded	Fluid has discolored.
in Switch			Water Conc: 4%, 6%, 10%, 75%	No Significant Temperature Rise. Test Suspended.
				Internal Analysis suspended.
	2	TI	New Brake Fluid	260+ hours. Constant temperature.
			1 Amp through switch terminals	No significant temperature rise with time
			14Vdc to one terminal, hexport grounded	Test Suspended.
	3	AVT	new' Brake Fluid in Switch, 24 VDC to one	> 300 hours into test, max current 7mA
			terminal. Hexport Grounded	No significant change with time. Test suspended
	4	AVT	new' Brake Fluid in Switch, 24 VDC to one	18 hours into test max current 5mA
			terminal. Hexport Grounded, Ambient at 100 C	No significant temperature rise with time. Test suspended.
	5	AVT	new' Brake Fluid in Switch, 16 Amps	Temperature rise of 20 C above room temp
			Through switch terminals	Delta T reached steady state at 20 C. Test suspended.
	5a	AVT	new' Brake Fluid in Switch approx. 50 Amps	Temperature rose to approx. 270 F. No smoke. No ignition
			through Switch Terminals	Test suspended.
	6	TI	Build heater elements into Switch.	3 tested. Smoke observed, ignition observed on part w/heater
			Heat till failure, include sparking.	See attachment
			(1) w/ solution of Brake Fluid and 6 wt. % H_2O	Test complete
				Brake fluid in cavity slowly rises [illegible]
				Smoke observed at [illegible]
	6a	TI	Create heater by corroding spring arm	One out of 15 devices increased resistance to 5 ohms.
			Salt water solution, 14V between spring	Others either very low resistance or megaohms
			and hexpost	It took about 100 hours to reach the 5 ohm stage.
				The 5 ohm device ignited under conditions similar to test 6.
	6b	TI	Re-run ignition test to understand	Switch ignition with repeated 5% water solution into switch
			repeatability and current path.	Current path is through hexport.
				See plots and video.

3713 5433

Brake Pressure Switch Test Log, Updated 6/1/99

				Additional test include tap water, old BF, new BF and other.
	6c	TI	Pure 'new' brake fluid with metal shavings	Metal shavings do not contribute significantly to brake fluid
				coductivity
Life Cycle Reliability	7	TI	0-1400 psig pressure pulses at 135C	First leak observed at 728,000 cycles.
of Pressure Switch			per ES	Test Completed. See attached Weibull Chart.
Diaphragm Wear	8	TI	0-1400 psig pressure pulses at 135C.	Parts withdrawn every 200k cycles, characterized for wear
Field vs Lab Correlation	9	Central Labs	Field returns, from dealer lots, junkyards	Parts in Central Labs, see Ford spreadsheet
Design Of Experiments (1)	10	TI	Vary water concentrations in 'new' Brake Fluid	Test Report being written investigation continues.
Evaluating Factors			12 snap + 12 quiet switches w/ 0 % water in BF	Suspended at 1.3 million cycles with no leaks observed.
Effecting Diaphragm Wear			12 snap + 12 quiet switches w/ 5 % water in BF	Snap samples suspended at 1.3 million cycles with 2 leaks
Impulse test				observed at 1.3M. Quiet samples suspended at 500k cycles to
				assess fixtuing anomalies.
On-Vehicle Characterization	11	AVT	Monitor Pressure and Temperature	Test at AVT see Ford charts >500k in car?
of Pressure & Temperature			at Switch Location for ABS and non-ABS	
Profile in Town Car			braking events.	
Brake fluid analysis	11a	TI	Analyze used brake fluid at the master cylinder	Test complete.
Used fluid at master cylinder.			(UMC), used brake fluid at the caliper (UCA)	UMC: Cu = 416 (ug/ml), Fe = 6.6 (ug/ml), Cr = 0.08 (ug/ml), 1.1 %H20.
			and new brake fluid (NEW) for metal and water	UCA: Cu = 592 (ug/ml), Fe = 5.5 (ug/ml), Cr = 1.9 (ug/ml), 1.1 %H20.
			content.	NEW: Cu = <0.01 (ug/ml), Fe = 0.92 (ug/ml), Cr = <.01 (ug/ml), 0.3 %H20.
Spur Fire Study	12	Central Labs	Determine [illegible] spark levels to switch	[illegible]
			[illegible]	[illegible]
			Use dry switches as well as switches with	
			various brake fluid water mixes.	
Characterization of	13	Central Labs	Characterize electrical, mechanical	Data log and analysis procedure set up complete.
switches retrieved from field			and chemical aspects of returned switches	Analysis of switches in progress.
junkyards & other sources				
Fluid Ingress Tests	13a	TI	Repeat ignition simulation with different fluids.	Test complete.
			(3) hour tests:	5% NaCl sample resulted in no ignition.
			5% NaCl in tap water	All brake fluid samples drew less than 3 mAmps. No corrosion

3713 5434

			rain water	visible on brake fluid samples.
			(24) hour tests:	Rain water and tap water samples draw <10 mAmps and showed
			tap water	some signes of corrosion.
			used brake fluid	Chemical anlysis in process.
			used brake fluid w/ 5% H_2O	
			new brake fluid	
			new brake fluid w/ 5% H_2O	
Design Of Experiments (2)	13b	TI	Vary water concentrations in 'new' Brake Fluid	Test suspended. Analysis in process to assess test fixturing.
Repeat of test 10			10 snap + 20 quiet switches w/ 0 % water in BF	
			10 snap + 20 quiet switches w/ 5 % water in BF	
Compatibility of Kapton	14	Dupont	Characterize change in properties of Kapton	Test in progress (100) hours completed. Oxalic acid shows
with Oxalic Acid			with various % oxalic acid in brake fluid.	similar effects that water has on Kapton properties.
Evaluation of Plastic	15	TI	Assess properties and moldability of different	Test suspended
Materials with Improved			grades of plastic resin with additives	Celenese and Noryl ignited 3/5 and 2/5 trials
Parameters			to improve plastic part performance	ZYTEL samples tested 1/5 ignitions
Long duration brake fluid	15a	TI	(4) samples with new brake fluid	Test suspended (550) hours completed.
ingress test.			(2) samples with used brake fluid	Used brake fluid current dropped off to <1/10 mAmp.
				New BF hexport current can increases w/ time under cont. power.
Evaluation of Switch	15b	TI	Assess ignition sensitivity to switch orientation.	Test complete. Ignition is independent of switch orientation.
Orientation				
Relay Circuit	16	TI	Repeat test 13a in Ford relay circuit for (48) hrs.	Test complete. No ignition. Corrosion rate drastically reduced.
Test			Bring switch to impending ignition in (15) Amp	insufficient power in circuit to create or move toward ignition in lab
			circuit then place in relay circuit for (18) hrs.	Heater element was warm to the touch.
			Input max. circuit power into heater on switch.	
Long duration brake fluid	17	TI	(50) samples filled with new brake fluid	Test suspended. (312) hours completed.
ingress test number 2.			(1) hour of vibration per day	Average hexport current is 1.9 mAmp (stdeviation = 1.8 mAmps)
			(1) hour soak at 100 deg C per day	

3713 5435

Texas Instrument investigations

1. Coat cup with plastic or other non-conductive coating (like anodizing)
   Lengthens corrosive path to ground
   Insulates from broken spring switch contacting ground

2. Make cup of non-conductive material
   Lengthens corrosive path to ground
   Insulates from broken spring switch contacting ground

3. Add plastic diaphragm between cup/transfer pin and the spring contact/switch [illegible]
   Additional layer of isolation between mechanical components and electrical components

4. Place plastic insulator disk on the cup with hole only for the transfer pin
   Reduces surface area exposed between battery and ground

5. Replace kapton membranes with pure teflon membranes
   Increased flexibility of membrane

6. Replace kapton seal with sliding piston seal
   Eliminates wear on kapton

7. Change cup/converter topology
   Spread flexure over greater area of the kapton
   Reduce interfaces where extreme flexure occur

8. Replace switch with pressure transducer and semi-conductor switch
   Eliminates kapton seal

9. Design thermal link in power supply side of switch that opens at elevated temperature (one time or cycling)
   Turns off power before heat becomes great enough to cause ignition

10. Reverse polarity of switch contacts
    Removes power from spring contact if it moves out of position

11. Insulate/plastic coat spring except contact area
    Reduces corrosive exposure
    Reduces conductive material to making contact with ground

12. Gold plate spring contact
    Reduces corrosion

13. Fill air gap in switch housing with potting material to seal connector openning
    Seal off connector path of contamination

14. Change switch housing material for improved ignition parameters
    Reduces ability for flame to spread after initial heat source is removed

15. Add another layer to the kapton seal
    Possible increased life of seal before perforations occur

16. Add ground fault interrupter circuit to switch circuit
    Turns off power if ground path to case is detected

Ford Investigations

Add ground fault interrupter circuit to switch circuit
Turns off power if ground path to case is detected

Turn the sensor with connector down
Contamination will tend to collect away from battery to ground gap

Add device to provide negative coefficient resistance with temperature rise

Move switch to ground leg of the clutch coil
Removes battery from switch

Package switch on brake pedal bracket
Takes switch out of underhood environment
Removes terminals from proximity to ground

Add in-line fuse in switch circuit
Removes power from switch when current limit is exceeded

Relocate power source to RUN circuit
Provides power only when vehicle is running

Insulate switch body from proportioning valve
Increases ground path

		Vehicle	92	93	94	95	96	97	98		00
F2AC	AA	CV/GM	X			X					
F2AC	AA	TOWN CAR				X			X		
F2VC	AA	CV/GM	X								
F2VC	AA	TOWN CAR	X								
F2VC	AB	CV/GM	X								
F2VC	AB	DEN98									
F2VC	AB	MARK VIII		X	X						
F2VC	AB	TAURUS/SABLE		X	X		X				
F2VC	AB	TOWN CAR	X	X	X						
F2VC	BA	TOWN CAR	X								
F2VC	BB	TOWN CAR	X								
F3DC	AA	TAURUS/SABLE		X	X						
F3TA	AA	ECONOLINE						X			
F3TA	BA	BRONCO		X							
F3TA	BA	EXPEDITION						X			
F3TA	BA	F-SERIES					X				
F3TA	BA	P131		X							
F3TA	BA	VN56		X							
F3TA	CA	ECONOLINE							X		
F3TA	CA	EXPLORER							X		X
F5GA	AA	MKM126				X					
F5GA	AB	MKM126					X				
F5OB	AA	CONTINENTAL				X			X		
F6CB	AA	TAURUS/SABLE					X				
F6DB	AA	TAURUS/SABLE					X				
F6DB	AB	TAURUS/SABLE					X				X
F6LC	AA	MARK VIII					X				
F6SB	AA	DEN96									
F6SB	AA	JAG X200									
F6SB	AA	THIRD/COUGAR				X	X	X			
F6ZB	AA	MUSTANG					X				
F6ZB	AB	DEN98									
F6ZB	AB	JAG X200									
F6ZB	AB	MUSTANG					X				
F8AB	AA	CV/GM							X		
F8AB	AA	TOWN CAR							X		
F8DB	AA	CONTINENTAL							X		
F8OB	AA	CV/GM							X		
F8OB	AA	DEN98									
F8OB	AA	JAG X200									
F8OB	AA	TAURUS/SABLE							X		X
F9OB	AA	TOWN CAR							X		
XF1T	AC	CONTINENTAL									
XF1T	AC	CV/GM									
XF1T	AC	DEN98									
XF1T	AC	JAG X200									
XF1T	AC	TAURUS/SABLE									X
XF1T	AC	TOWN CAR									
XOR3	AA	MUSTANG									
XOR3	AA	JAG X200									

3713 5438

98-DEC-09

TG 11[30] AM BOS 3981875 MTG

MN 2[14] PM 79164

98-DEC-10

MT 70s

27842 ZA574 STATED CONTROL

99 — ZB264 SWITCH

MEMPHIS REGIN

98-DEC-11 MT 12[13] AM 10s

JOE NEWE 3968133 ZB264

JN 08133

98-DEC-14

757 7000 11[00] AM FRIDAY 10s

734 692 6624

901-757-7068

98-DEC-14 2994591 NOON 30s MARK FORTIN TOMORROW

1-248-852-0400

98-DEC-15

NEW LINE 42686 —

852 0408 11[00] AM 2m MARK FORT

MARTIN T 12[6] 322-7842 MARK NEWET

ANTIHACK CONTROL BOTTOM

MTT 12[52] PM 60s 370 7802 2 NEWETT 2AM ELECTRICAL STAT

RELAYS ↓

MT 2[00] PM 2 WAY RADIO 5m ROBIN CARROLL 601 2269359

3713 6440

98-DEC-16 6455852 9:52 AM 5Ds

SAM LANGUP TUBOL

END OF 1998

3713 5441

99-JAN-08

5^44 PM TERRI 01875 COMPLN FDE

MN 9^# AM 90S 79164

STM ORGANIZE 3 MIN 3279967

BASE H/N TRUCKING — MOTOR 17508

B 28264

AR/SIC 5311/5311

W WASHER 17664

LAW 178649

HIGH MAN 13832

LAW MAN 13832

STOP NEXT 5^# 10S

MT 8^22 PM FRI

7 MIN 3227847

8^35 ROB D/A FILE PAUPERS

5 TRUCKS

25 COMPS

NO CONSUMER LITIGATION

9-JAN-11 9^51 10S 3274847 CRIS

MILES N 10^# 30S 13179164

BRIAN TI
~~[illegible]~~ DAGUE

508 236-3239

3713 5445

JIM GUZZWAS 3379962 FRIDAY [TRAN CAL CONDUIT]

MORRI LEWIS 8:32 2MW [illegible] JOE [illegible] 0813

SWITCHES [PORTER]

[ENGINEERING SITE

[ECONOLINE ISSUE HAVE REPORT THROUGH IRRATIC STRIP CHART

SWITCH BEING CHANGED SITE LOW ON VOLTAGE

MIKE N 10:13 AM IDC 79164

99-JAN-15

BILL MEER 2:30 ZOC x 47098

RASAM HANSEN 0459095

CLEAN SITE DONE — ABSOLUTELY IN DATA

AWS NEW DESK

9:35 MET TUR ZOC 270892 MOES 31 [illegible] VOLTS

[illegible] BLADERS LOG

5626110 8:29 AM ZOC [illegible] ACCESS

VERO [illegible] CAUSE HAVE A SWITCH

F2A2-904A

561-582 72

567 5272

2:00 THURS [illegible] 9 AM 99-JAN-15

RAY SACKETT ZOC 7907307 97 [illegible]

[illegible] PORTER 11 ON [illegible]

ZAMORA 12:35

99-JAN-19

12:30 AM ZOC BRIAN DAVIES 5087363234

3713 5446

99-FEB-03 MATT NIESL

20s 396 5126 . ROD DIFFERENT

JAN LOGEL 40s 594 3723

FINAL COMMENTS — DISPLEASE WITH LOW SEVERITY

THRESHOLD

ROD ENGLISH 3373225

COVER SHIELD 42 WAY CONNECTOR

→ APPEARANCE DEGRADATION COVER '93

MAC LUND 7174

STEVE BERINGHAUS

→

ELIZ WASH BLAKER

04D002 MIKE AUBREY

2ND 60s KIM IKLIT — SUITABLE JOB REVIEW

99-FEB-04

FLVC 92, 93 TC 2M MA

MATT

4TH AM FLIGHT

T.C. 90 CONTR L/M

2ND MTG TO DISCUSS INFO.

WHAT IF WE JUMPED

MTT 4TH 60s 3267092 HAVE SEEN 91 94 95

25 SALES-IN → LOB MARKAY LIFT MATRIX

3713 5451

99-FEB-05

50s 390 8132 JOE NEKE DISC. SUMMARY TO ANSWER

QUESTIONS SEVERAL ANY TECH REVIEW.

BARBARA TAGLI 70s 5942772 SUITE 6200

PACKAGE DTC

TIM GREEN 95 60s 390 7875

TG COMMENT LETTER

11:47 AM 10c SAM DEGANE

99-FEB-08

8:30 ELMAR R

GSC 230+ $1000 $1015.00

IN STOCK

70s 71847 3 CHECKING 77 3DAYS

MY

VOFAM

SYM COME A KEY WOR

KEY WOR

DAMAN P/N 1

MAINTENANCE

MTT 1:30 PM 4c 3/2 70847

99-FEB-09 8:30c 5C27987 F-SHARE

JOE CARROLL 90c 3905389 JOE CARROLL AVT ELECTRICAL

SYSTEMS 8:00 JKAFATT

3713 5452

99-MAY-05 JAY LOGEL 12:04 30s

5943723

COMMITT ADDRESS MANIFESTATION SV WARRANTY

TIM GREEN 90s 08175

BRIEF LAST

SWITCH A

4 LAST WORD - MARCH 1989

SAME 9 TO

CRIS 87-93

15 ONIS 87-93

17 INTR SE 87

JAY LOGEL FAX MARKS

→ ART

TIM GREEN 4:27 60s

3901875 3PM 4PM

99-MAY-06

L.C. 4:38 PM 10s 6054380

JIMMY RUNGO ? 3230231 GONE 11th TRAY

2488671 → DEBRA??

3713 5475

99-MAY-14 4:40 PM TG SIGNED COPY TO TG

Ø 86867

Ø 87147 → SAFETY WWW = SAFETY.LAW.FORD.COM

TEST-DATA FUNCTION

DEARBORN US DATA SOURCE

DEPT. W-DRIVE

→ DR

DEPT

B0549 K/S

99-MAY-17

JAY 11:17 AM 5993723

JL 11:12 AM 43723

JOE KAPPI

→ 92 20 ENG OFF UNK 30 ON OFF UNK

93 2 ENG OFF UNK 6 ON OFF UNK

MT 10:42 AM 405 3378042 111

HANDLE HONDA PICK UP MAC'S 36

ON T.C. OUTSIDE COUNCIL 147

KEVIN BAUTER 305 3378570 FIRD BAUTER

ELECTRIC STEERING FORD 10 DAYS 53722

99-MAY-21

FRANK LALO 4:00 305 3387149 111 QHA

NHTSA REVIEW 36

147 TOTAL

3713 5477

616 6170767

99-MAY-20 TIM GREEN

60s 390 1875

_____ CHAT W/RN, 91-93 RESPECT BETS

99-MAY-24 JM 70s X75554 WHEN MORE INFO RECALL

99-MAY-25

TYRA WRIGHT 3rd 2nd 87746 OGC GONZALES

LTC THIS WEEK LOCAL COUNCIL TWO DOCUMENTS

INITIAL LETTER FROM NHTSA ODI

COPY OF LETTER NHTSA MOVING AE TO EA

JM. 11th AM 10s 8454183 ODI MOVE

32109 FRANK LOLLO 12th 20s 3432109

HAVE LOOK AT FILE

99-MAY-26

AB-OH

STEW REMARKS 50s 390786 PART 4 MAD

NO MAGNATE

JOE MOVE

JM 11/99 70s 8454183 JILL KLUBER

STEW 12:55 10s 390 8123 MAD

MARCOLI
FCOLE 12:57 40s 3221807 SPEED CONTROL GROUP

STEVE VOLUME BY MODEL MODEL

JILL KLUBER

TYRA WRIGHT X87746

3713 5478

99-MAR-27

JILL K 5[15]

JIM GREEN 5[35] 10s 3901875

JK 8[06] AM 10s 3221635

[redacted]

JIM 9[05] AM 8451103 LAWSUITS & CLAIMS

PAGE ROLL P.B. LINE STUCK

RHONDA ROSTELLE

SEARCH 5222ϕ

JIM STEVENS 2655

99-JUN-ϕ1

RHONDA ROSTEL 30 8452222ϕ ESCORT SEARCH

CRITERIA

JOE KARTI 10s 3905389 QUESTIONS ON ESCORT

& BOUNDLINE

11th JIM K.

12th MTG 30s x 27842 → HOLD SEARCH DATE SEAL

1st JILL K. 10s 21635

GEORGE BAKER 40s 3[illegible]231 99515 SUPER BOUNDLINE

GLOBAL SURVEY LINES

99-JUN-02

JOE KARTI 3rd 10s 3905389

3713 5479

1992 and 1993 Town Car underhood fires

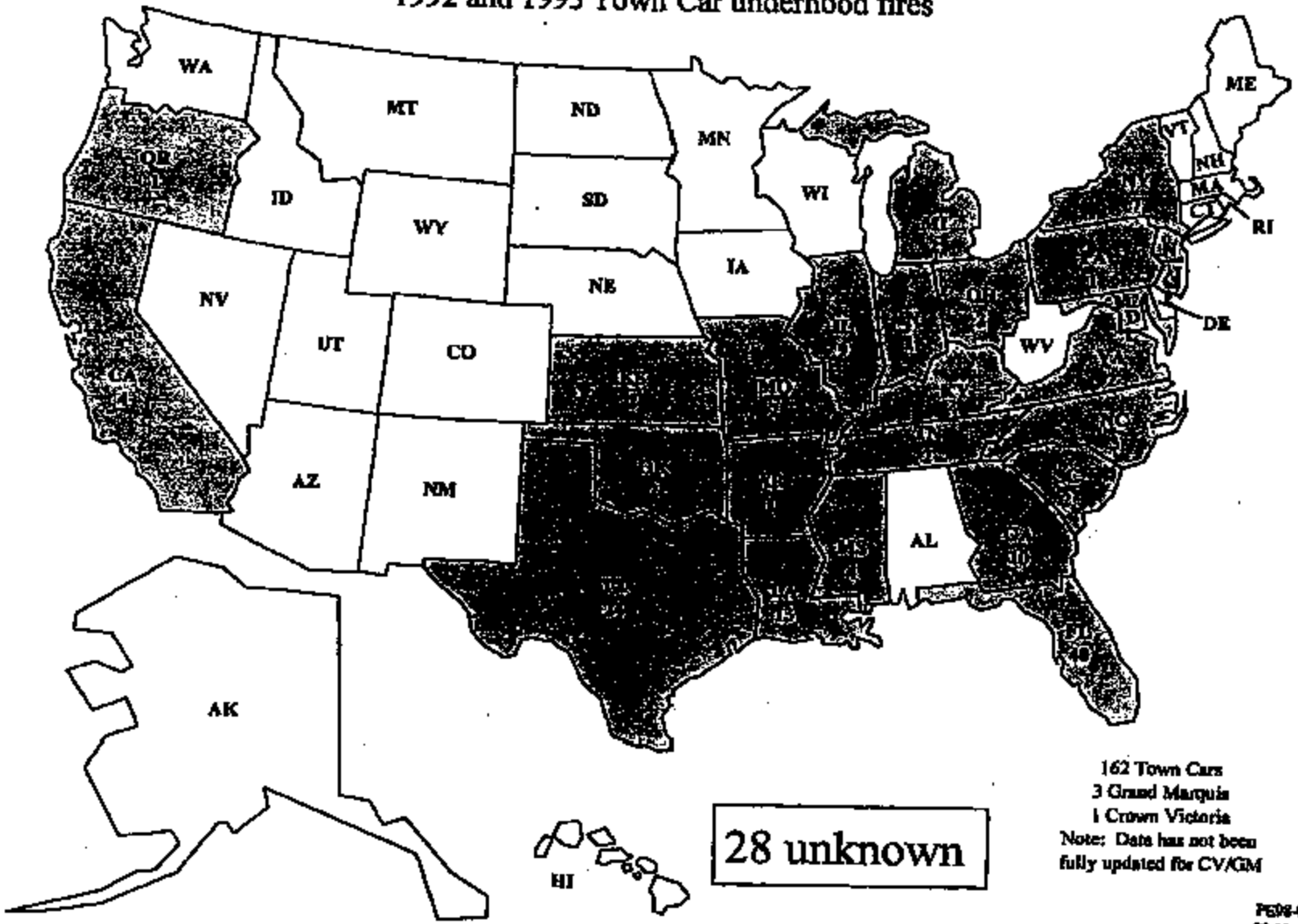

28 unknown

162 Town Cars
3 Grand Marquis
1 Crown Victoria
Note: Data has not been fully updated for CV/GM

P698-055
99-Mar-29
map fires as of march 29.ppt

3713 5480

TC

Plot_build date

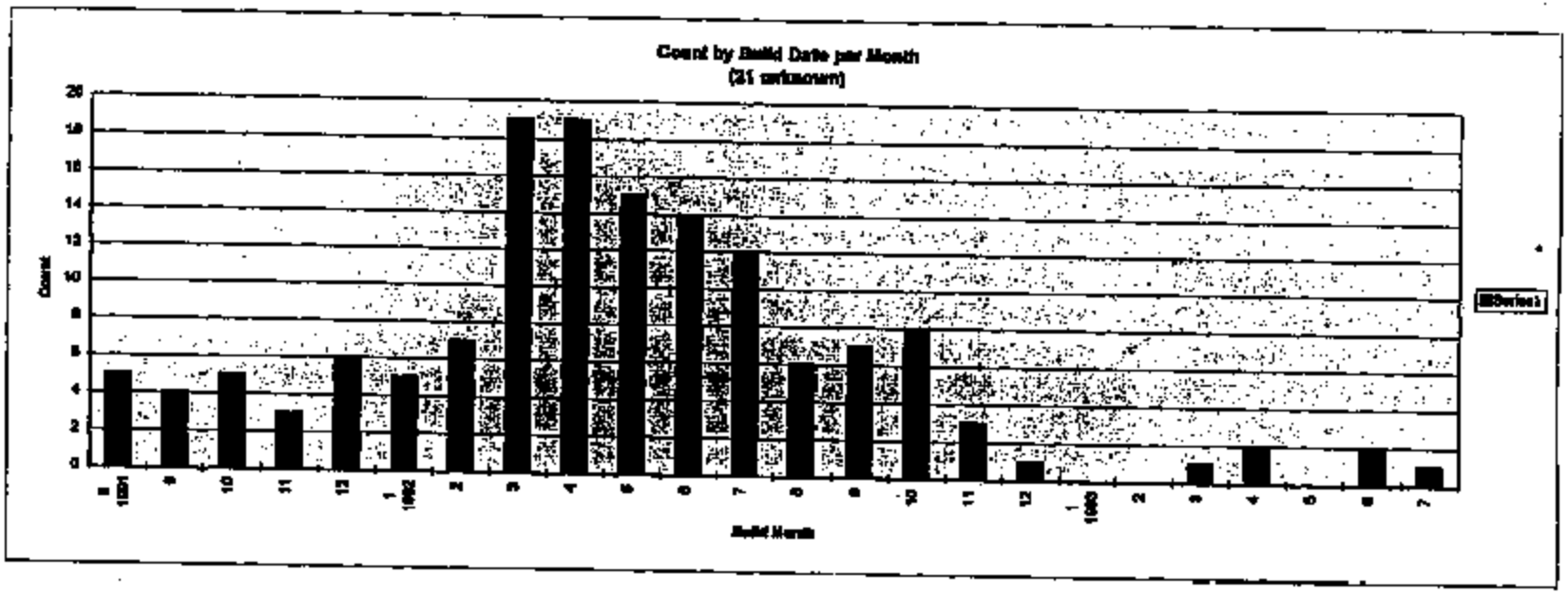

3713 5481

e&f&voq_db_PE98-055.xls
4/19/99

TC

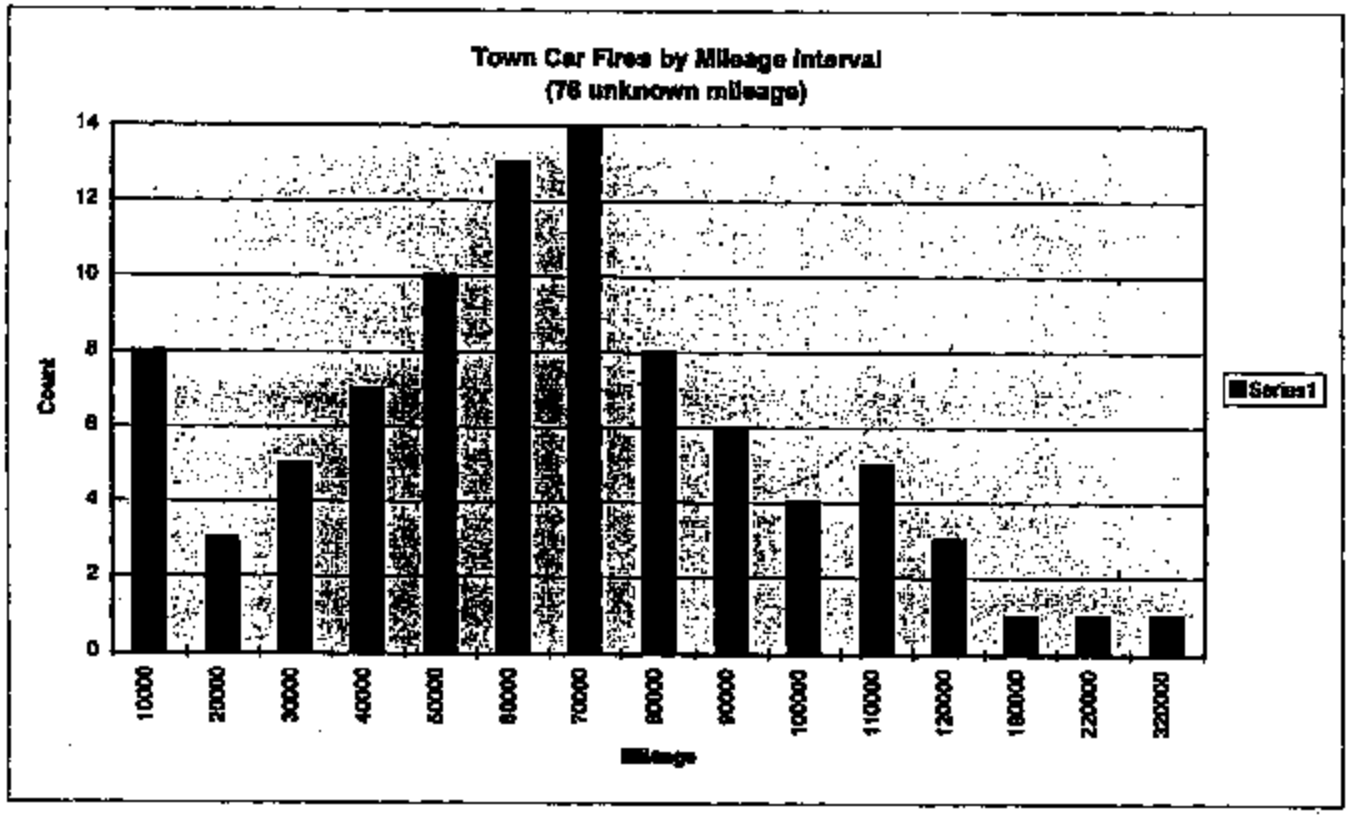
Town Car Fires by Mileage Interval
(76 unknown mileage)
Count
0
2
4
6
8
10
12
14
10000
20000
30000
40000
50000
60000
70000
80000
90000
100000
110000
120000
180000
220000
320000
Mileage
Series1

3713 5492

TC

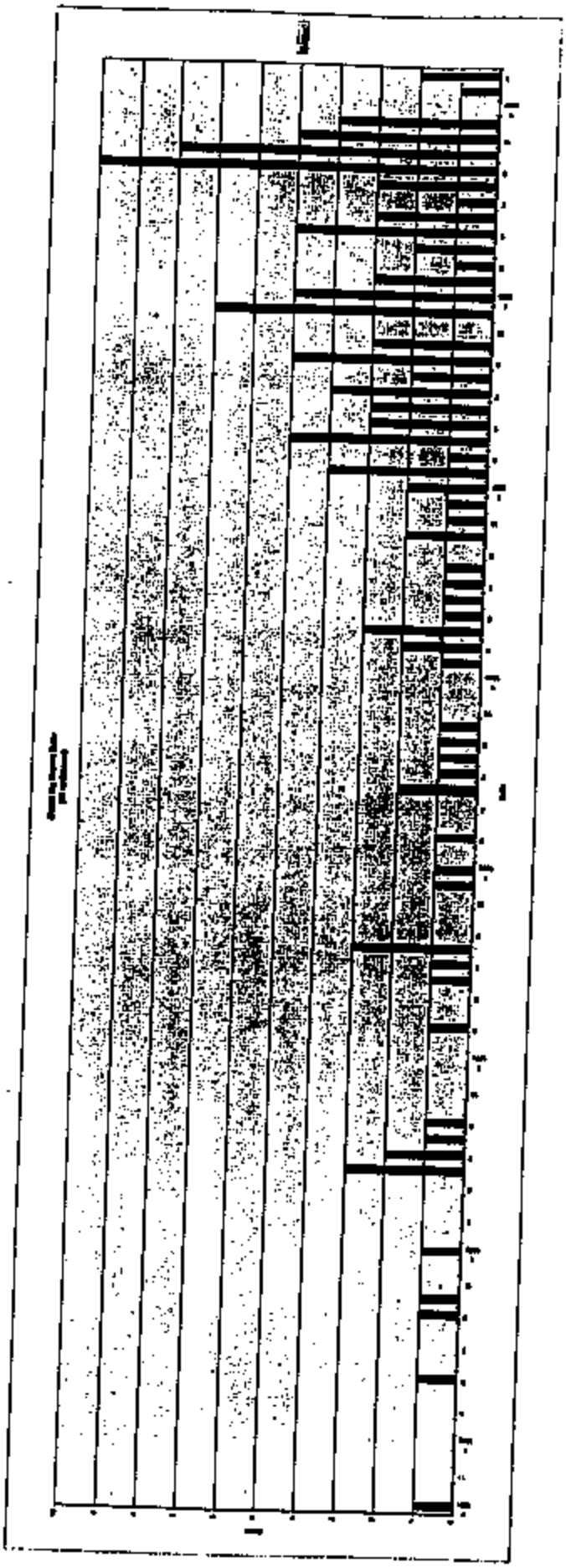

3713 8483

CV GM

plot_bld_date

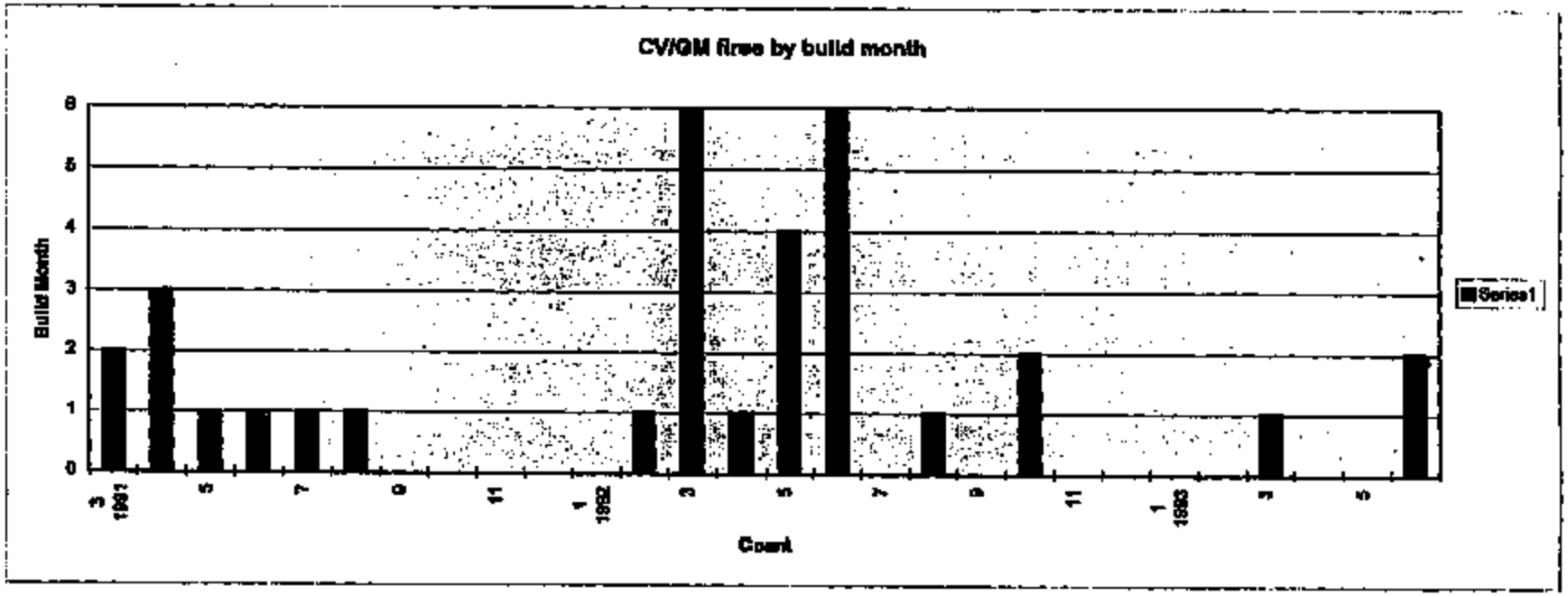

3713 5484

DISPOSE of Copies (Black Stamped) by:	2004
RETAIN Record Copy (Red Stamped) Thru:	
Schedule Number:	27.03

Ford Motor Company
Automotive Safety Office
Environmental and Safety Engineering

330 Town Center Drive
Dearborn, Michigan 48126

January 26, 1999

Mr. Al Griffin
Territorial Manager
Unified Investigations & Sciences, Inc.
223 E. Greenbriar Lane
Dallas, TX 75203

Subject: 1992 Lincoln Town Car and Components Removed
VIN: 1LM[redacted]
Owner: [redacted]

Dear Mr. Griffin:

I would like to take this opportunity to thank you for allowing us to inspect the Town Car vehicles.

Per your request, we are returning to Mr. Richard Taylor the engine compartment components which were removed from the subject vehicle in the same condition they were in at the time of the removal.

Very truly yours,

R. A. Nevi

R. A. Nevi, Manager
Car Safety Investigations

wma1.doc/djp

cc: Mr. R. Taylor

3713 5485

DISPOSE of Copies (Black Stamped) by:
RETAIN Record Copy (Red Stamped) Thru:
2004
Document 27.03

PLEASE TYPE OR PRINT
FOR SHIPMENTS WITHIN U.S. ONLY

5453173832

03

DIAMOND [illegible]
8111 Abramczyk 313-323-1603

NAS

Unified Investigations & Sciences, Inc.

PIA

223 N. Greenbriar Lane

SDS

Dallas TX 75231

Richard Taylor 214-946-8989

SAT HAA
LAB

Engine component parts

D. Polaski 1/26/99

3713 5486

Unified
Investigations & Sciences, Inc.

DESTROY Copy (Black Stamped) by:	2004
RETAIN Record Copy (Red Stamped) Thru:	
Schedule Number: 27.03	

VIA FACSIMILE

January 21, 1999

Mr. Ray Nevi
Car Safety Investigations Manager
Automotive Safety & Engineering Standards Office
Ford Motor Company
330 Town Center Drive
Dearborn, Michigan 48126

Re: 1992 Lincoln Town Car and components removed
VIN: 1LMLM83W5N[redacted]
Owner[redacted]

Dear Mr. Nevi:

On January 14, 1999, an examination of the captioned fire-damaged vehicle was conducted at a storage facility in Houston, Texas. During the inspection, Bill Abramczyk, who was representing Ford Motor Company, removed a component from the engine compartment and took custody of the component.

Under no circumstances should any destructive testing be conducted on any of the evidence removed. It is imperative that the evidence removed from the vehicle be immediately returned to us for preservation purposes. Please properly package and ship the component to:

Unified Investigations & Sciences, Inc.
Attn: Richard Taylor
223 E. Greenbriar Lane
Dallas, TX 75203

If further examination of the evidence is desired, we will make the product available at a time that is mutually convenient for all interested parties.

Thank you for your prompt attention to this matter.

Sincerely,

Al Griffin
Territorial Manager

223 E. Greenbriar Lane ■ Dallas, Texas 75203 ■ 214-946-8989 ■ Fax 214-946-8586

3713 5487

Form Approved O.M.B. No. 2127-0004

US Department of Transportation
National Highway Traffic Safety Administration

AUTO SAFETY HOTLINE
VEHICLE OWNER'S QUESTIONNAIRE

NATIONWIDE 1-888-327-4236
DC METRO AREA 202-366-0123

COPIED

FOR AGENCY USE ONLY

DATE RECEIVED RECEIVED 98 OCT -2 AM 11:05 SCOPE DEFECTS

ed.or ___
rt.ot ___
ed.rt ___
up.lt ___

REFERENCE NO. 544199

OWNER INFORMATION (TYPE OR PRINT)

NAME and ADDRESS
[redacted]
ATLANTA, GA. [redacted]

DAY TIME TELEPHONE NO. (AREA CODE) [redacted]

Do you authorize NHTSA to provide a copy of this report to the manufacturer of your vehicle? YES [X] NO [ ]
In the absence of an authorization, NHTSA WILL NOT provide your name or address to the vehicle manufacturer.

SIGNATURE OF OWNER [redacted] DATE 2-22-99

VEHICLE INFORMATION

VEHICLE IDENTIFICATION NO.*	VEHICLE MAKE	VEHICLE MODEL	MODEL YEAR
1LNLM82W[redacted]	LINCOLN	TOWN CAR	1992

*LOCATED AT BOTTOM OF WINDSHIELD ON DRIVER'S SIDE

CURRENT ODOMETER READING: 6 7 0 0 0

DATE PURCHASED 7/94 [ ] NEW [X] USED

DEALER'S NAME, CITY & STATE: FRANK JACKSON L/M 7555 ROSWELL RD. DUNWOODY, GA. 30342

ENGINE SIZE (CIDCCL) 4.6L NO. CYLINDERS 8 [ ] TURBO [ ] DIESEL [X] GAS [ ] FUEL INJECTN

TRANSMISSION TYPE: [ ] MANUAL [X] AUTOMATIC

ANTILOCK BRAKES: [X] YES [ ] NO

RESTRAINT SYSTEM: [X] DRIVER SIDE AIRBAG [ ] MOTORIZED [X] PASSENGER SIDE AIRBAG [X] 3-POINT BELT [ ] 2-POINT BELT

CRUISE CONTROL: [X] YES [ ] NO

DRIVETRAIN: [ ] FRONT [X] REAR [ ] 4-WHEEL

BODY STYLE: STATION ___ 4 DR ___ 2 DR [X] HATCH BK ___ VAN ___ PK UP TRK ___ OTHER ___

FAILED COMPONENT(S)/PART(S) INFORMATION (REPORT TIRE INFORMATION ON BACK)

COMPONENT	PART NAME(S)	LOCATION	FAILED PART(S)
UNKNOWN	UNKNOWN	[ ] LEFT [X] FRONT [ ] RIGHT [ ] REAR	[X] ORIGINAL [ ] REPLACEMENT

NO. OF FAILURES: ONE

DATE(S) OF FAILURE(S): OCTOBER 4, 1998

MILEAGE AT FAILURE(S): 67,000

VEHICLE SPEED AT FAILURE(S): PARKED

MANUFACTURER CONTACTED: [ ] YES [X] NO

NHTSA PREVIOUSLY CONTACTED: [ ] YES [X] NO

APPLICABLE ACCIDENT INFORMATION

ACCIDENT	FIRE	NUMBER PERSONS INJURED	NUMBER OF FATALITIES	PROPERTY DAMAGE	POLICE REPORTED
[ ] YES [ ] NO	[X] YES [ ] NO	UNDETERMINED	NONE	$290,000.00	[X] YES [ ] NO

NARRATIVE DESCRIPTION OF FAILURE(S), ACCIDENT(S), INJURY(IES)

The owner parked her Lincoln under the carport at her residence on Saturday, October 3, 1998, and did not move the auto. On Sunday, October 4, 1998, our client noticed a bright light coming from the carport area at approximately 11:00 p.m. Our client looked in the carport and saw flames coming from under the hood of the Lincoln on the driver's side. The client called the Fire Department minutes later and then heard an explosion. Before the fire was extinguished, the Lincoln was destroyed, a 1994 Ford Explorer also parked in the carport was destroyed and over $290,000.00 in damages was sustained by our client's home and the loss of personal effects.

CONTINUE ON BACK IF NEEDED

The Privacy Act of 1974
Public Law 93-579
This information is requested pursuant to authority vested in the National Highway Traffic Safety Act and subsequent amendments. You are under no obligation to respond to this questionnaire. Your response may be used to assist the NHTSA in determining whether a manufacturer should take appropriate action to correct a safety defect. If the NHTSA proceeds with administrative enforcement or litigation against a manufacturer, your response, or a statistical summary thereof, may be used in support of the agency's action.

HS-Form 350 (Rev. 5-93)

MAR 17 '99 14:38

PAGE.02

3713 5488

FIRE MARSHAL'S
OFFICE

P.O. Box 5030
2400 Rhode Island Ave.
Fort Pierce, Fl. 34948

St. Lucie County
Fire District

(561) 462-2312 • FAX (561) 462-2323

FIRE INVESTIGATION REPORT

"CONFIDENTIAL"

DATE: 1/11/99

CASE NUMBER: 99-04

RUN NUMBER: 696

TIME OF FIRE: 20:12

INVESTIGATION DATE: 01/11/99

INVESTIGATION TIME: 21:27

FIRE CAUSE: Accidental/Engine compartment

DAY OF WEEK: Mon.

LOCATION [redacted], Ft. Pierce, Fl.

DESCRIPTION: Vehicle fire with two exposures

VIN: 1LNLM81W6NY708528

TAG: [redacted]

DOLLAR VALUE: 13,000.00 / 200.00 / 500.00

DOLLAR LOSS: 12,700.00

INSURANCE COMPANY: State Farm Keith Mayfield

POLICY NUMBER: 892-8019-09

PROPERTY INSURED VALUE:

CONTENTS INSURED VALUE:

MORTGAGE COMPANY:

ACCOUNT NUMBER:

OWNER NAME:

RACE[redacted]

SEX:

DOB:

POB[redacted]

ADDRESS: rt St. Lucie, Fl.

ADDITIONAL OWNERS SEE NARRATIVE: n/a

OCCUPANT NAME: Vehicle parked

RACE:

SEX:

DOB:

POB:

ADDRESS:

ADDITIONAL OCCUPANTS SEE NARRATIVE: n/a

INJURED/FATALITIES NAME: n/a

RACE:

SEX:

DOB:

POB:

ADDRESS:

ADDITIONAL FATALITIES/INJURED SEE NARRATIVE: n/a

ARRESTED NAME: n/a

RACE:

SEX:

DOB:

POB:

ADDRESS:

ADDITIONAL ARRESTS SEE NARRATIVE: n/a

NARRATIVE:

NARRATION SUMMARY:

Monday, January 11, 1999 at 20:37 hrs. I was requested to investigate the origin and cause of a vehicle fire that occurred at 20:12 hrs. in the parking lot of [redacted] Port St. Lucie, Florida. Upon my arrival at 21:27 hrs. I met with fire suppression personnel who advised that the vehicle was parked in the parking lot by the owner, prior to her starting work at 3 p.m. this day. It was then brought to my attention that two vehicles parked next to the fire incident sustained fire exposure damage.

SCENE DESCRIPTION:

The vehicle a four door, white 1992 Lincoln Town Car was observed parked with the front facing to the east in the parking lot of [redacted] The vehicle beared a Florida license tag [redacted] and the vin # 1LNLM82W8NY[redacted] Fire damage was apparent. Fire patterns indicate the fire traveled from the front of the vehicle to the rear of the vehicle. Parked directly to the north of the suspect vehicle was a blue, two door 1989 Dodge Aries, tag [redacted] which sustained minor fire damage to the rear quarter panel and tire. This vehicle was parked with the front facing to the west. Parked directly to the south of the suspect vehicle was a red, four door 1995 Ford Taurus, [redacted] which sustained minor heat and smoke damage. Photographs were taken at this time.

SCENE EXAMINATION:

An exterior review of the vehicle, starting with the rear of the vehicle, moving in a clockwise manner, revealed heavy fire damage to the front moving to the rear of the vehicle. The front tires and hood were consumed by the fire. The windshield was also destroyed by the fire. The rear tires were inflated and unremarkable. Exterior fire patterns indicate fire extension from the engine compartment. An interior review indicated the fire had progressed through the cowl assembly (fire wall) and through the front windshield. Although the dash board and instrument cluster were damaged by the fire it

was still recognizable. Fire damage to the remainder was in the upper portion of the interior moving downward and back.

The investigation then focused on the engine compartment. Fire patterns observed within the engine compartment indicate the fire progressed through the engine compartment from the driver side to the passenger side. A closer examination of the area between the fire wall, inner fender and the engine (drivers side) revealed extensive fire damage to the mechanical components of the vehicle. No unexpected odors were present.

CONCLUSION:

Based on the fire scene examination and the information obtained the area of origin was located on the drivers side of the engine compartment. The ignition source could not be determined. For further information refer to the report of State Investigator Greg Gilkey. This file will be considered closed, however, should circumstance warrant supplement reports will be added into this file.

Anthony F. Ilento
Fire Investigator