EA02025

TEXAS INSTRUMENTS, INC.'S

9/10/03 ATTACHMENT TO ODI

BOX 4, PARTS A - N

PART K

TEXAS INSTRUMENTS

DIMENSIONAL ANALYSIS ON PART NUMBER

F2NC-9F924-AA

	BLUEPRINT SPEC	CAVITY # 1 ACTUAL	CAVITY # 2 ACTUAL	CAVITY # 3 ACTUAL	CAVITY # 4 ACTUAL	CAVITY # 5 ACTUAL	CAVITY # 6 ACTUAL	COMMENTS
1	1.85-2.06	1.933	1.933	1.942	1.956	1.900	1.927	
2	⌀ 19.05 MAX x	18.687	18.692	18.523	18.733	18.733	18.665	
	y	18.756	18.211	18.724	18.693	18.672	18.695	
3	0.25-0.75	0.593 0.746	0.310 0.452	0.641 0.425	0.531 0.591	0.558 0.684	0.635 0.475	
4	2.79-3.10 2x	2.90 2.91	2.90 2.92	2.91 2.93	2.92 2.94	2.91 2.92	2.91 2.94	
5	19.45-19.81	19.65	19.70	19.71	19.73	19.75	19.73	
6	11.40-11.90	11.794	11.797	11.791	11.790	11.764	11.803	
7	16.56-16.76	16.623	16.632	16.636	16.634	16.626	16.626	
8	2.84-3.05	2.936	2.948	2.927	2.924	2.910	2.919	
	⊕ 0.1 Ⓜ A	0.035	0.017	0.018	0.006	0.043	0.030	
9	1.24-1.45	1.241	1.242	1.249	1.260	1.270	1.258	
10	11.60-11.92	11.864	11.719	11.725	11.681	11.682	11.736	
11	1.24-1.55	1.384	1.397	1.393	1.397	1.425	1.398	
12	57.15 MAX	55.64	55.65	55.69	55.75	55.75	55.71	
13	12.59-13.11	12.824	12.862	12.914	12.993	12.859	12.906	

TEXAS INSTRUMENTS INCORPORATED • 64 FOREST STREET • ATTLEBORO, MA 02703
508-699-6460 • TELEX 95-7765 TWX 710-348-0549 • CABLE TEXINS

TEXAS INSTRUMENTS

DIMENSIONAL ANALYSIS ON PART NUMBER

F2MC-9F924-AA

	BLUEPRINT SPEC	CAVITY # 1 ACTUAL	CAVITY # 2 ACTUAL	CAVITY # 3 ACTUAL	CAVITY # 4 ACTUAL	CAVITY # 5 ACTUAL	CAVITY # 6 ACTUAL	COMMENTS
14	11.68-12.17	12.023	12.025	12.146	12.126	12.068	12.138	
		11.963	11.923	12.056	12.081	12.011	12.055	
15	6.60-6.81	6.702	6.696	6.690	6.698	6.708	6.712	
16	NO FLASH/BURRS	OK	OK	OK	OK	OK	OK	
17	2.79-3.41	3.059	3.164	3.162	3.205	3.197	3.215	
18	0.67-1.30	1.137	1.066	1.139	1.165	1.071	1.117	
19	DATE & P/N	OK	OK	OK	OK	OK	OK	
20	3/8-24UNF-2A	OK	OK	OK	OK	OK	OK	
21	1.10-1.40	1.224	MEASURED	ON CROSS	SECTIONED	PART		
22	2.5 $\sqrt{c}$	.5 $\sqrt{c}$	MEASURED	ON CROSS	SECTIONED	PART		
23	⌀ 0.16 0	.0127	.00254	.0254	.010	.0127	.01524	
24	41-43 REQ.	42DEG 10MIN	MEASURED	ON CROSS	SECTIONED	PART		
25	40-50DEG CHAMF	44DEG 20MIN	44DEG 7MIN	41DEG 37MIN	46DEG 6MIN	45DEG 53MIN	46DEG 9MIN	
26	⌀ 7.82-8.03	7.940	8.001	7.932	7.919	7.950	7.980	
27	1.32-2.04	1.834	1.897	1.783	1.821	1.823	1.783	
28	9.36-9.66	9.433	9.442	9.462	9.304	9.307	9.448	
29	8.12 MIN	8.913	9.104	8.945	8.900	8.950	8.894	

TEXAS INSTRUMENTS INCORPORATED • 34 FORBES STREET • ATTLEBORO, MA 02703
508-699-8800 • TELEX 95-1798 TWX 710-348-6868 • CABLE TEXINS

TEXAS INSTRUMENTS

DIMENSIONAL ANALYSIS ON PART NUMBER

F2AC-9F924-AA

	BLUEPRINT SPEC	CAVITY # 1 ACTUAL	CAVITY # 2 ACTUAL	CAVITY # 3 ACTUAL	CAVITY # 4 ACTUAL	CAVITY # 5 ACTUAL	CAVITY # 6 ACTUAL	COMMENTS:
30	14.23 MAX	13.64	13.58	13.50	13.53	13.59	13.56	
31	⌀ 32.51 MAX	31.40	31.63	31.61	31.58	31.64	31.45	
32	⌀ 5.58-5.85 x	5.702	5.611	5.592	5.677	5.676	5.594	
	y	5.693	5.667	5.629	5.693	5.642	5.592	
33	⌀ 7.29-7.37 x	7.304	7.293	7.296	7.263	7.288	7.319	
	y	7.341	7.363	7.319	7.332	7.311	7.322	
34	⌀ 3.30-3.60 x	3.454	3.469	3.438	3.413	3.483	3.439	
	y	3.439	3.450	3.402	3.402	3.479	3.436	
35	⌀ 14.02-14.53	14.11 14.13	14.13 14.14	14.12 14.14	14.12 14.13	14.13 14.14	14.13 14.14	
36	0.38-0.60 2pl	0.626 0.664	0.620 0.665	0.623 0.653	0.625 0.670	0.624 0.664	0.629 0.665	
37	2.39-2.80 2pl	2.699 2.625	2.682 2.631	2.721 2.677	2.703 2.625	2.674 2.630	2.668 2.638	
	⊕ 0.25 Ⓜ A B	0.013 0.049	0.019 0.072	0.041 0.062	0.004 0.112	0.033 0.143	0.014 0.103	
38	8.30-8.72 2pl	8.321 8.430	8.318 8.475	8.488 8.445	8.374 8.524	8.344 8.369	8.343 8.328	
39	250DEG+/-2 2pl	238DEG 52MIN	240DEG 24MIN	240DEG 1MIN	240DEG 54MIN	238DEG 36MIN	250DEG 4MIN	
		240DEG 21MIN	238DEG 36MIN	238DEG 42MIN	238DEG 47MIN	240DEG 28MIN	238DEG 24MIN	
40	COLOR: NATURAL	OK	OK	OK	OK	OK	OK	
41	(71.5DEG) 2PL	71DEG 49MIN	71DEG 25MIN	72DEG 21MIN	71DEG 45MIN	71DEG 43MIN	71DEG 43MIN	
		72DEG 37MIN	72DEG 21MIN	72DEG 14MIN	72DEG 30MIN	72DEG 5MIN	72DEG 35MIN	

TEXAS INSTRUMENTS INCORPORATED • 34 FOREST STREET • ATTLEBORO, MA 02703
508-699-4800 • TELEX 95-7795 TWX 710-346-0888 • CABLE TIRONE

TEXAS INSTRUMENTS

DIMENSIONAL ANALYSIS ON PART NUMBER

F2AC-9F924-AA

	BLUEPRINT SPEC	CAVITY # 1 ACTUAL	CAVITY # 2 ACTUAL	CAVITY # 3 ACTUAL	CAVITY # 4 ACTUAL	CAVITY # 5 ACTUAL	CAVITY # 6 ACTUAL	COMMENTS
30	14.23 MAX	13.64	13.58	13.50	13.53	13.50	13.56	
31	∅ 32.51 MAX	31.40	31.63	31.61	31.58	31.66	31.45	
32	∅ 5.58-5.85 x	5.702	5.611	5.592	5.677	5.676	5.594	
	y	5.693	5.667	5.629	5.693	5.642	5.592	
33	∅ 7.23-7.37 x	7.304	7.293	7.296	7.262	7.288	7.319	
	y	7.344	7.363	7.319	7.332	7.311	7.322	
34	∅ 3.30-3.60 x	3.454	3.469	3.438	3.413	3.403	3.438	
	y	3.439	3.450	3.402	3.402	3.479	3.436	
35	∅ 14.02-14.53	14.11 14.13	14.13 14.14	14.12 14.14	14.12 14.13	14.18 14.14	14.13 14.14	
36	0.59-0.69 2pl	0.626 0.664	0.620 0.665	0.623 0.653	0.625 0.670	0.624 0.664	0.629 0.665	
37	2.59-2.80 2pl	2.699 2.625	2.682 2.631	2.721 2.677	2.703 2.625	2.674 2.630	2.668 2.638	
	● 0.25 ● A B	0.013 0.049	0.019 0.072	0.041 0.062	0.004 0.112	0.039 0.143	0.014 0.103	
38	8.30-8.72 2pl	8.321 8.430	8.318 8.475	8.408 8.445	8.376 8.524	8.346 8.367	8.343 8.328	
39	25360+/-2 2pl	23DEG 52MIN	24DEG 24MIN	24DEG 1MIN	24DEG 54MIN	23DEG 36MIN	23DEG 48MIN	
		24DEG 21MIN	23DEG 36MIN	23DEG 42MIN	22DEG 47MIN	24DEG 28MIN	23DEG 26MIN	
40	COLOR NATURAL	OK	OK	OK	OK	OK	OK	
41	(71.5DEG) 2PL	71DEG 49MIN	71DEG 22MIN	72DEG 26MIN	71DEG 49MIN	71DEG 43MIN	71DEG 43MIN	
		72DEG 37MIN	72DEG 21MIN	72DEG 14MIN	72DEG 30MIN	72DEG 5MIN	72DEG 30MIN	

#42 Meets Specification & Note Requirements -

Ford

PROCESS POTENTIAL AND QUALITY INDEXES SUMMARY DATA SHEET

PART #: E2AC-9K926-AA
SUPPLIER: TEXAS INSTRUMENTS
CODE: T095A
ADDRESS: 34 FOREST ST.
ATTLEBORO, MA 02703
VEHICLE BUILD: EP VP FB OTHER

SUPPLIER CONTACT: JIM WATT
CONTACT PHONE: (508) 699-1719
PART DESCRIPTION: NEXT GENERATION SPEED CONTROL DEACTIVATION SWITCH
SQA CODE:
VEHICLE PROGRAM: PASS CAR EN53

CHARACTERISTIC TYPE

∇ = FORD CRITICAL CHARACTERISTICS

S.C. = FORD OR SUPPLIER SIGNIFICANT CHARACTERISTICS

NUMBER OF CRITICAL AND SIGNIFICANT CHARACTERISTICS:

1:	ACTUATION	TYPE: SC	Cp = **	Cpk = **
2:	RELEASE	TYPE: SC	Cp = **	Cpk = **
3:	3/8-24UNF-2A THREADS	TYPE: SC	Cp = A*	Cpk = A*
4:		TYPE:	Cp =	Cpk =
5:		TYPE:	Cp =	Cpk =
6:		TYPE:	Cp =	Cpk =
7:		TYPE:	Cp =	Cpk =
8:		TYPE:	Cp =	Cpk =
9:		TYPE:	Cp =	Cpk =
10:		TYPE:	Cp =	Cpk =
11:		TYPE:	Cp =	Cpk =
12:		TYPE:	Cp =	Cpk =
13:		TYPE:	Cp =	Cpk =
14:		TYPE:	Cp =	Cpk =
15:		TYPE:	Cp =	Cpk =

PIST = 1833/1833 x 100 = 100 %

$PIPC_{Cp}$ = _____ x 100 = _____ % $PIPC_{Cpk}$ = _____ x 100 _____ %

COMMENTS:

** CALIBRATION CHECK IS DONE 100 PERCENT.PARTS TESTED 300 ; DEFECTIVE 0 PERCENT OF DEFECT 0.

A* THREADS ARE CHECKED ON A GO/NOGO GAGE

PREPARED BY: ELAINE ROSE DATE: 8-19-92

TEST

77RSL3-1

[redacted] Pg #1 17X6= [illegible]102

2 14X6=84+3=87

3 [redacted]

[redacted]

[redacted]

[redacted]

[redacted]

[redacted]

[redacted]

[redacted]

[redacted]

[redacted]

[redacted]

DRAWINGS AVAILABLE UPON REQUEST

Ford

PROCESS POTENTIAL AND QUALITY INDEXES SUMMARY DATA SHEET

PART #: E2AC-9E924-AA
SUPPLIER: TEXAS INSTRUMENTS
CODE: T095A
ADDRESS: 34 FOREST ST.
ATTLEBORO,MA 02703
VEHICLE BUILD: EP VP PB OTHER

SUPPLIER CONTACT: JIM WATT
CONTACT PHONE: (508) 699-1719
PART DESCRIPTION: NEXT GENERATION SPEED CONTROL DEACTIVATION SWITCH
SQA CODE:
VEHICLE PROGRAM: PASS CAR EN52

CHARACTERISTIC TYPE

∇ = FORD CRITICAL CHARACTERISTICS

S.C. = FORD OR SUPPLIER SIGNIFICANT CHARACTERISTICS

NUMBER OF CRITICAL AND SIGNIFICANT CHARACTERISTICS:

1:	ACTUATION	TYPE: SC	Cp = **	Cpk = **
2:	RELEASE	TYPE: SC	Cp = **	Cpk = **
3:	3/8-24UNF-2A THREADS	TYPE: SC	Cp = AS	Cpk = AS
4:		TYPE:	Cp =	Cpk =
5:		TYPE:	Cp =	Cpk =
6:		TYPE:	Cp =	Cpk =
7:		TYPE:	Cp =	Cpk =
8:		TYPE:	Cp =	Cpk =
9:		TYPE:	Cp =	Cpk =
10:		TYPE:	Cp =	Cpk =
11:		TYPE:	Cp =	Cpk =
12:		TYPE:	Cp =	Cpk =
13:		TYPE:	Cp =	Cpk =
14:		TYPE:	Cp =	Cpk =
15:		TYPE:	Cp =	Cpk =

PIST = 1833/1833 x 100 = 100 %

$PIPC_{Cp}$ = _____ x 100 = _____ % $PIPC_{Cpk}$ = _____ x 100 _____ %

COMMENTS:

** CALIBRATION CHECK IS DONE 100 PERCENT.PARTS TESTED 300 ; DEFECTIVE 0 PERCENT OF DEFECT 0.

AS THREADS ARE CHECKED ON A GO/NOGO GAGE

PREPARED BY: ELAINE ROSE

DATE: 8-19-92

M GAGE STUDY FOR REPEATABILITY AND REPRODUCIBILITY (LONG METHOD
-Feb-92
//PS PRESSURE TESTER
ACTUATION

NUMBER OF OPERATORS	3	MIN SPEC	90
NUMBER OF PARTS	4	MAX SPEC	160
NUMBER OF TRIALS	2	TOLERANCE	70

DATA SUMMARY

OPERATOR	AVERAGE	RANGE
1	104.325	0.25
2	103.7	0.35
3	104.15	0.5
4	NA	NA
5	NA	NA
6	NA	NA
7	NA	NA
8	NA	NA
9	NA	NA
10	NA	NA
---	---	---
AVERAGE	104.0583	0.366666

MIN XBAR	103.7
MAX XBAR	104.325
XBARDIFF	0.625

	MEASUREMENT UNIT ANALYSIS	%TOLERANCE
REPEATABILITY:	1.674054	2.39%
REPRODUCIBILITY:	1.577854	2.25%
RPT & REPR (R&R):	2.300452	3.29%

NOTE: ALL CALCULATIONS BASED ON 5.15 SIGMA (99%)

TER STUDY TITLES IN CELLS A8,A9,A10. MIN/MAX SPEC IN B12. B13
//PS PRESSURE TESTER
ACTUATION

MIN SPEC 90
MAX SPEC 160
TOLERANCE 70

DATA FOR OPERATOR 1

PART	TRIAL 1	2	3	4	5	AVG	RANGE
1	107.3	106.8				107.05	0.5
2	106.7	106.8				106.75	0.1
3	102.9	102.5				102.7	0.4
4	100.8	100.8				100.8	0
5						NA	0
6						NA	0
7						NA	0
8						NA	0
9						NA	0
10						NA	0
11						NA	0
12						NA	0
13						NA	0
14						NA	0
15						NA	0
16						NA	0
17						NA	0
18						NA	0
19						NA	0
20						NA	0
21						NA	0
22						NA	0
23						NA	0
24						NA	0
25						NA	0

GRND AVG: 104.325 AVG RNGE: 0.25
UCL FOR INDIVIDUAL RANGES 1.1979

DATA FOR OPERATOR 2

PART	TRIAL 1	2	3	4	5	AVG	RANGE
1	105.6	105.5				105.55	0.1
2	106.3	106.3				106.3	0
3	103.1	102.1				102.6	1
4	100.5	100.2				100.35	0.3
5						NA	0
6						NA	0
7						NA	0
8						NA	0
9						NA	0
10						NA	0
11						NA	0
12						NA	0
13						NA	0
14						NA	0
15						NA	0
16						NA	0
17						NA	0
18						NA	0
19						NA	0
20						NA	0
21						NA	0
22						NA	0
23						NA	0
24						NA	0
25						NA	0

GRND AVG: 103.7 AVG RNGE: 0.35
UCL FOR INDIVIDUAL RANGES 1.1979

TA FOR OPERATOR 3

PART	TRIAL 1	2	3	4	5	AVG	RANGE
1	104.4	104.4				104.4	0
2	108.4	107.6				108	0.8
3	103	101.8				102.4	1.2
4	101.8	101.8				101.8	0
5						NA	0
6						NA	0
7						NA	0
8						NA	0
9						NA	0
10						NA	0
11						NA	0
12						NA	0
13						NA	0
14						NA	0
15						NA	0
16						NA	0
17						NA	0
18						NA	0
19						NA	0
20						NA	0
21						NA	0
22						NA	0
23						NA	0
24						NA	0
25						NA	0

GRND AVG: 104.15 AVG RNGE: 0.5
UCL FOR INDIVIDUAL RANGES 1.1979

GAGE STUDY FOR REPEATABILITY AND REPRODUCIBILITY (LONG METHOD
-Feb-92
//PS PRESSURE TESTER
RELEASE

NUMBER OF OPERATORS	3	MIN SPEC	20
NUMBER OF PARTS	4	MAX SPEC	120
NUMBER OF TRIALS	2	TOLERANCE	100

DATA SUMMARY

OPERATOR	AVERAGE	RANGE
1	46.075	0.5
2	45.2625	0.775
3	45.825	0.15
4	NA	NA
5	NA	NA
6	NA	NA
7	NA	NA
8	NA	NA
9	NA	NA
10	NA	NA
AVERAGE	45.72083	0.475

N XBAR	45.2625
X XBAR	46.075
XBARDIFF	0.8125

	MEASUREMENT UNIT ANALYSIS	%TOLERANCE
REPEATABILITY:	2.168661	2.17%
REPRODUCIBILITY:	2.052217	2.05%
RPT & REPR (R&R):	2.985747	2.99%

NOTE: ALL CALCULATIONS BASED ON 5.15 SIGMA (99%)

TER STUDY TITLES IN CELLS A8.A9.A10. MIN/MAX SPEC IN B12, B13
7/P8 PRESSURE TESTER
RELEASE

MIN SPEC	20
MAX SPEC	120
TOLERANCE	100

DATA FOR OPERATOR 1

PART	TRIAL 1	2	3	4	5	AVG	RANGE
1	44.1	43.8				43.95	0.3
2	50.5	50.1				50.3	0.4
3	48.7	48.4				48.55	0.3
4	42	41				41.5	1
5						NA	0
6						NA	0
7						NA	0
8						NA	0
9						NA	0
10						NA	0
11						NA	0
12						NA	0
13						NA	0
14						NA	0
15						NA	0
16						NA	0
17						NA	0
18						NA	0
19						NA	0
20						NA	0
21						NA	0
22						NA	0
23						NA	0
24						NA	0
25						NA	0

GRND AVG: 46.075 AVG RNGE: 0.5
UCL FOR INDIVIDUAL RANGES 1.551825

DATA FOR OPERATOR 2

PART	TRIAL 1	2	3	4	5	AVG	RANGE
1	43.7	43.2				43.45	0.5
2	49.4	47.6				48.5	1.8
3	48.8	48.2				48.5	0.6
4	40.7	40.5				40.6	0.2
5						NA	0
6						NA	0
7						NA	0
8						NA	0
9						NA	0
10						NA	0
11						NA	0
12						NA	0
13						NA	0
14						NA	0
15						NA	0
16						NA	0
17						NA	0
18						NA	0
19						NA	0
20						NA	0
21						NA	0
22						NA	0
23						NA	0
24						NA	0
25						NA	0

GRND AVG: 45.2625 AVG RNGE: 0.775
UCL FOR INDIVIDUAL RANGES 1.551825

TA FOR OPERATOR 3

PART	TRIAL 1	2	3	4	5	AVG	RANGE
1	42.6	42.5				42.55	0.1
2	50.7	50.4				50.55	0.3
3	48.8	48.7				48.75	0.1
4	41.5	41.4				41.45	0.1
5						NA	0
6						NA	0
7						NA	0
8						NA	0
9						NA	0
10						NA	0
11						NA	0
12						NA	0
13						NA	0
14						NA	0
15						NA	0
16						NA	0
17						NA	0
18						NA	0
19						NA	0
20						NA	0
21						NA	0
22						NA	0
23						NA	0
24						NA	0
25						NA	0

GRND AVG: 45.825 AVG RNGE: 0.15
UCL FOR INDIVIDUAL RANGES 1.591825

GAGE STUDY FOR REPEATABILITY AND REPRODUCIBILITY (LONG METHOD

DIAL INDICATOR
GAGE # 16070
TTPS

NUMBER OF OPERATORS	2	MIN SPEC	0.459
NUMBER OF PARTS	10	MAX SPEC	0.479
NUMBER OF TRIALS	2	TOLERANCE	0.02

DATA SUMMARY

OPERATOR	AVERAGE	RANGE
1	0.470705	0.00019
2	0.470625	0.00063
3	NA	NA
4	NA	NA
5	NA	NA
6	NA	NA
7	NA	NA
8	NA	NA
9	NA	NA
10	NA	NA
AVERAGE	0.470665	0.00041

MIN XBAR 0.470625
MAX XBAR 0.470705
XBARDIFF 0.00008

	MEASUREMENT UNIT ANALYSIS	%TOLERANCE
REPEATABILITY:	0.001871	9.36%
REPRODUCIBILITY:	0	0.00%
RPT & REPR (R&R):	0.001871	9.36%

NOTE: ALL CALCULATIONS BASED ON 5.15 SIGMA (99%)

ER STUDY TITLES IN CELLS A8.A9.A10. MIN/MAX SPEC IN B12. B13
DIAL INDICATOR
GAGE # 16070

MIN SPEC 0.459
MAX SPEC 0.479
TOLERANCE 0.02

DATA FOR OPERATOR 1

PART	TRIAL 1	2	3	4	5	AVG	RANGE
1	0.4693	0.4694				0.46935	0.0001
2	0.4697	0.4696				0.46965	0.0001
3	0.471	0.4715				0.47125	0.0005
4	0.4718	0.4718				0.4718	0
5	0.472	0.472				0.472	0
6	0.4715	0.4716				0.47155	0.0001
7	0.4707	0.471				0.47085	0.0003
8	0.4694	0.4693				0.46935	0.0001
9	0.4718	0.4713				0.47155	0.0005
10	0.4696	0.4698				0.4697	0.0002
11						NA	0
12						NA	0
13						NA	0
14						NA	0
15						NA	0
16						NA	0
17						NA	0
18						NA	0
19						NA	0
20						NA	0
21						NA	0
22						NA	0
23						NA	0
24						NA	0
25						NA	0

GRND AVG=0.470705 AVG RNGE= 0.00019
UCL FOR INDIVIDUAL RANGES 0.001339

TA FOR OPERATOR 2

PART	TRIAL 1	2	3	4	5	AVG	RANGE
1	0.4695	0.4696				0.46955	0.0001
2	0.4693	0.4698				0.46955	0.0005
3	0.4718	0.4709				0.47135	0.0009
4	0.4719	0.4706				0.47125	0.0013
5	0.4715	0.4718				0.47165	0.0003
6	0.4715	0.4717				0.4716	0.0002
7	0.471	0.4715				0.47125	0.0005
8	0.4705	0.4716				0.47105	0.0011
9	0.4694	0.4702				0.4698	0.0008
10	0.4689	0.4695				0.4692	0.0006
11						NA	0
12						NA	0
13						NA	0
14						NA	0
15						NA	0
16						NA	0
17						NA	0
18						NA	0
19						NA	0
20						NA	0
21						NA	0
22						NA	0
23						NA	0
24						NA	0
25						NA	0

GRND AVG: 0.470625 AVG RNGE: 0.00063
UCL FOR INDIVIDUAL RANGES 0.001339

PROCESS FLOW
CONTROL CHART

FORD NEXT GENERATION SPEED CONTROL

PROCESS FLOW CHART 77PS

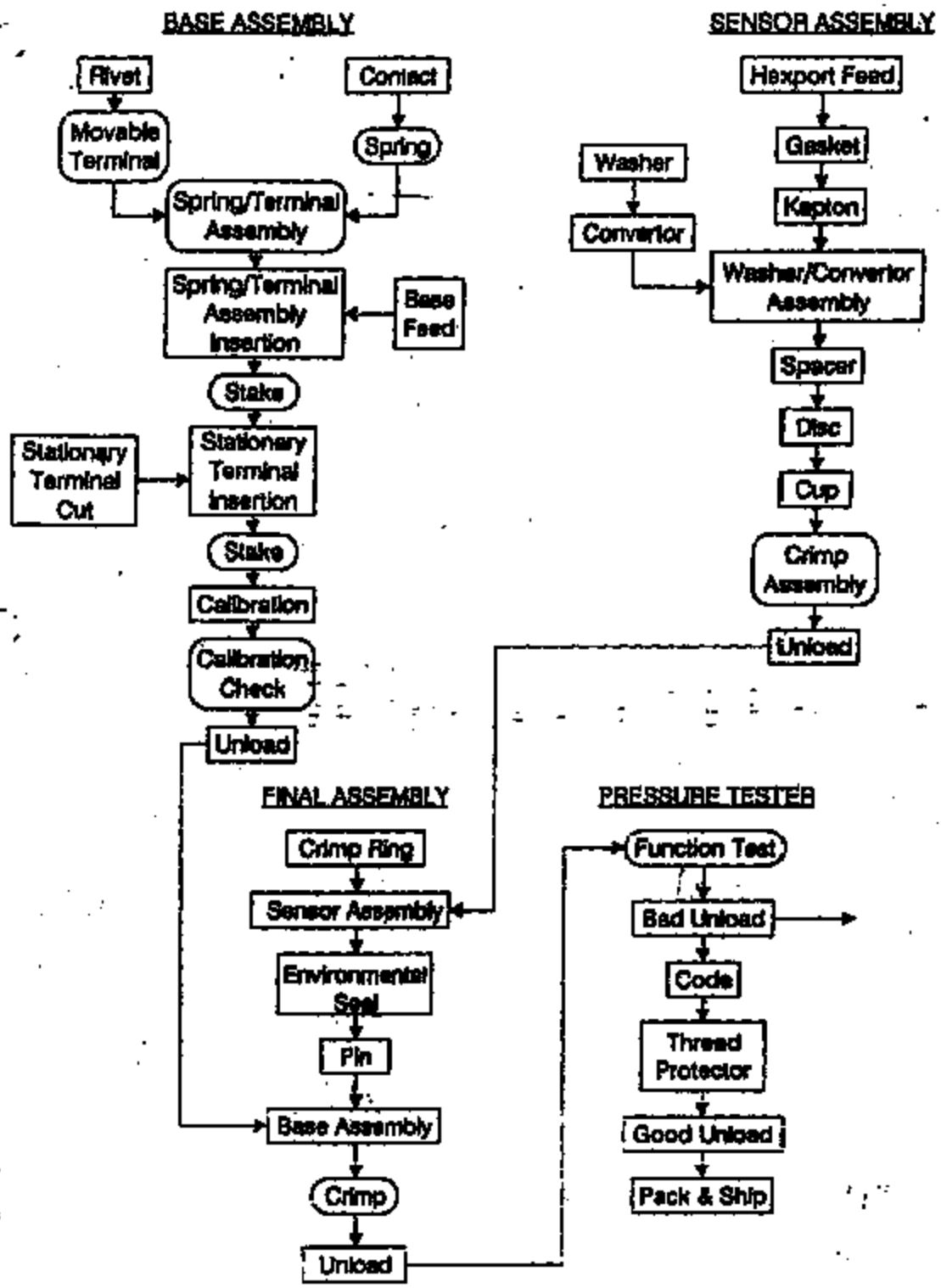

SPC Operation

Standard Operation

FORD NEXT GENERATION SPEED CONTROL (77PS)
MANUFACTURING CONTROL PLAN

PROCESS STEP DESCRIPTION	PRODUCT CHARACTERISTICS	EVALUATION METHOD	CONTROL METHOD	FREQUENCY OF TEST	REACTION PLAN
BASE ASSEMBLY (AMI AUTOMATION)	TERMINAL HEIGHT	DIAL INDICATOR	X/ R	5pc/ Hr.	SORT SINCE LAST CHECK
	TERMINAL PUSHOUT	FORCE GAGE/ DIAL INDICATOR	X/ R	5pc/ Hr.	SORT SINCE LAST CHECK
	TERMINAL SEPERATION/ ALIGNMENT	PLUG GAGE	X/ R	5pc/ Hr.	SORT SINCE LAST CHECK
	SPRING ANGLE	COMPARATOR	X/ R	5pc/ Hr.	SORT SINCE LAST CHECK
	SPRING CONTACT WIDTH	CALIPERS	X/ R	5pc/ Hr.	SORT SINCE LAST CHECK
	SPRING TORQUE	FORCE GAGE	X/ R	5pc/ Hr.	SORT SINCE LAST CHECK
	SPRING BUMP HEIGHT	CALIPERS	X/ R	5pc/ Hr.	SORT SINCE LAST CHECK
	RIVET HEIGHT	DIAL INDICATOR	X/ R	5Pc/ Hr.	SORT SINCE LAST CHECK
	CALIBRATION DEFORMATION	CUSTOM CONTINUITY SYSTEM	X/ R	5pc/ Hr.	SORT SINCE LAST CHECK
	VISUAL QUALITY	VISUAL	X/ R	5pc/ Hr.	SORT SINCE LAST CHECK
SENSOR ASSEMBL	CRIMP DIAMETER	CALIPERS	X/ R	5pc/ Hr.	SORT SINCE LAST CHECK
	CRIMP HEIGHT	CALIPERS	X/ R	5pc/ Hr.	SORT SINCE LAST CHECK
	VISUAL QUALITY	VISUAL	P	5pc/ Hr.	SORT SINCE LAST CHECK

Revision: D

27 May 1992 MJS/enr 050-0134

FORD NEXT GENERATION SPEED CONTROL (77PS)
MANUFACTURING CONTROL PLAN

PROCESS STEP DESCRIPTION	PRODUCT CHARACTERISTICS	EVALUATION METHOD	CONTROL METHOD	FREQUENCY OF TEST	REACTION PLAN
FINAL ASSEMBLY (AMI AUTOMATION)	CRIMP DIAMETER	CALIPER	X/R	5pc/Hr.	SORT SINCE LAST CHECK
	CRIMP HEIGHT	CALIPER	X/R	5pc/Hr.	SORT SINCE LAST CHECK
	BASE TORQUE	TORQUE GAGE	X/R	5pc/Hr.	SORT SINCE LAST CHECK
	CODE CRIMP RING/ DIAMETER-LEGIBILITY	PLUG-VISUAL	P	5pc/Hr.	SORT SINCE LAST CHECK
FUNCTION TESTER (CUSTOM)	ACTUATION/RELEASE POINTS (Ford Significant Char.)	MASTERS	X/R	EACH SHIFT	TOOL ROOM/ ENGINEERING EVALUATIONS
▽	ACTUATION/RELEASE POINTS	RAMP THROUGH PRESSURE RANGE	X/R	100%	YIELD TRACKING/ SCRAP CONTROL
▽ Q.C. AUDITS	OUTLINED IN DETAIL IN TEXAS INSTRUMENTS (QAS 208), FMC (THREADS / Ford Significant Char.)				

Revision: D

27 May 1992 MJS/cnr 069-0134

TI-NHTSA 008491

Item Description/Function	Potential Failure Mode	Potential Effects of Failure	Sev	Class	Potential Causes of Failure	Occ	Current Controls	Det	RPN	Recommended Actions	Resp/Completed Actions	Action Taken	Sev	Occ	Det	RPN
[illegible]	[illegible]	[illegible] FIELD LOSS	[illegible]		[illegible]	1	[illegible] [illegible] CHECK [illegible]	1	8							
	[illegible]	[illegible]	[illegible]		[illegible]	1	[illegible] [illegible] CHECK	1	8							
	[illegible]	[illegible]	[illegible]		[illegible]	1	[illegible] [illegible] CHECK	1	8							
[illegible]	[illegible]	LOSS	[illegible]		[illegible]	1	[illegible] FUNCTION TEST CONTINUITY FROM [illegible]	1	7			[illegible]				
	[illegible]	LOSS	[illegible]		[illegible]	1	[illegible] FUNCTION TEST CONTINUITY FROM [illegible]	1	8							
	[illegible]	LOSS FIELD LOSS	[illegible]		[illegible]	1	[illegible] FUNCTION TEST	1	9							
[illegible]	[illegible]	[illegible]	[illegible]		[illegible]	1	[illegible] [illegible] [illegible]	1	9							
	[illegible]	[illegible]	[illegible]		[illegible]	1	[illegible] FUNCTION TEST CONTINUITY FROM	1	8							
	[illegible]	LOSS [illegible] FIELD LOSS	[illegible]		[illegible]	1	[illegible] FUNCTION TEST CONTINUITY FROM [illegible] [illegible]	1	8							
	[illegible]	LOSS [illegible] FIELD LOSS	[illegible]		[illegible]	1	[illegible] FUNCTION TEST CONTINUITY FROM [illegible] [illegible]	1	8							
	[illegible]	[illegible]	[illegible]		[illegible]	1	[illegible] FUNCTION TEST [illegible] FROM. [illegible]	1	8							
[illegible]	[illegible]	[illegible]	[illegible]		[illegible]	1	[illegible]	1	3							
[illegible]	[illegible]	[illegible]	[illegible]		[illegible]	1	[illegible] CHECK [illegible] FUNCTION TEST	1	10							
	[illegible]	[illegible] LOSS	[illegible]		[illegible]	1	[illegible] CHECK [illegible] FUNCTION TEST	1	10							
	[illegible]	[illegible] FIELD LOSS	[illegible]		[illegible] [illegible]	1	[illegible] FUNCTION TEST [illegible]	1	7	[illegible]						
[illegible]	[illegible]	[illegible]	[illegible]		[illegible]	1	[illegible] FUNCTION TEST [illegible] CHECK [illegible] FROM. [illegible]	1	8							

Process Description/ Function	Potential Failure Mode	Potential Effects of Failure	S E V	C L A S S	Potential Causes of Failure	O C C	Current Controls	D E T	R P N	Recommended Actions	Area/Individual Responsible	ACTION RESULTS Actions Taken	S E V	O C C	D E T	R P N
[illegible]	[illegible]	[illegible]	7		[illegible]	1	[illegible]	1	7							
	[illegible]	[illegible]	8		[illegible]	1	[illegible]	1	8							
	[illegible]	[illegible]	8		[illegible]	1	[illegible]	1	8							
[illegible]	[illegible]	[illegible]	7		[illegible]	1	[illegible]	1	7							
	[illegible]	[illegible]	7		[illegible]	1	[illegible]	1	7							
	[illegible]	[illegible]	7		[illegible]	1	[illegible]	1	7							
	[illegible]	[illegible]	7		[illegible]	1		1	7							
	[illegible]	[illegible]	7		[illegible]	1	[illegible]	1	7							
[illegible]	[illegible]	[illegible]	6		[illegible]	2	[illegible]	1	12							
	[illegible]	[illegible]	6		[illegible]	2	[illegible]	1	12							
	[illegible]	[illegible]	6		[illegible]	3	[illegible]	1	18							
	[illegible]	[illegible]	8		[illegible]	1	[illegible]	1	8							
	[illegible]	[illegible]	8		[illegible]	1	[illegible]	1	8							
[illegible]	[illegible]	[illegible]	6		[illegible]	1	[illegible]	1	6							
	[illegible]	[illegible]	7		[illegible]	1	[illegible]	1	7							

Process Description/ Purpose	Potential Failure Mode	Potential Effects of Failure	SEV	CLASS	Potential Causes of Failure	OCC	Current Controls	DET	RPN	Recommended Actions	Responsibility/ Target Completion	SECTION B Actions Taken	SEV	OCC	DET	RPN
[illegible]	[illegible]	[illegible]	5		[illegible]	1	[illegible]	1	5							
[illegible]	[illegible]	[illegible]	5		[illegible]	1	[illegible]	1	5	[illegible]	[illegible]					
	[illegible]	[illegible]	1		[illegible]	1	[illegible]	1	1							
[illegible]	[illegible]	[illegible]	7		[illegible]	1	[illegible]	1	7							
	[illegible]	[illegible]	5		[illegible]	1	[illegible]	1	5							
	[illegible]	[illegible]	5		[illegible]	1	[illegible]	1	5							
[illegible]	[illegible]	[illegible]	5		[illegible]	1	[illegible]	1	5							
	[illegible]	[illegible]	5		[illegible]	4	[illegible]	1	5							
	[illegible]	[illegible]	1		[illegible]	1	[illegible]	1	1	[illegible]	[illegible]					
	[illegible]	[illegible]	4		[illegible]	1	[illegible]	1	5							
	[illegible]	[illegible]	4		[illegible]	1	[illegible]	1	5							
[illegible]	[illegible]	[illegible]	5		[illegible]	1	[illegible]	1	5							
	[illegible]	[illegible]	5		[illegible]	1	[illegible]	1	5							

Process Description/ Purpose	Potential Failure Mode	Potential Effects of Failure	SEV	CLASS	Potential Causes of Failure	OCC	Current Controls	DET	RPN	Recommended Actions	Responsibility & Target Completion Date	ACTION RESULTS Actions Taken	SEV	OCC	DET	RPN
[illegible]	[illegible]	[illegible]	7		[illegible]	1	[illegible]	1	7							
[illegible]	[illegible]	[illegible]	5		[illegible]	1	[illegible]	1	5							
[illegible]	[illegible]	[illegible]	7		[illegible]	3	[illegible]	1	21							
	[illegible]	[illegible]	7		[illegible]	3	[illegible]	1	21							
	[illegible]	[illegible]	8		[illegible]	5	[illegible]	7	70	[illegible]	[illegible]					
	[illegible]	[illegible]	5		[illegible]	1	[illegible]	1	5							
[illegible]	[illegible]	[illegible]	5		[illegible]	1	[illegible]	1	5							
	[illegible]	[illegible]	6		[illegible]	1	[illegible]	1	18							
[illegible]	[illegible]	[illegible]	7		[illegible]	1	[illegible]	1	7	[illegible]	[illegible]					
	[illegible]	[illegible]	6		[illegible]	3	[illegible]	1	18							
[illegible]	[illegible]	[illegible]	6		[illegible]	1	[illegible]	1	6							
	[illegible]	[illegible]	6		[illegible]	1	[illegible]	1	6							
	[illegible]	[illegible]	9		[illegible]	1	[illegible]	1	9							
[illegible]	[illegible]	[illegible]	7		[illegible]	3	[illegible]	1	21							

Process Description/ Purpose	Potential Failure Mode	Potential Effects of Failure	SEV	CLASS	Potential Causes of Failure	OCC	Current Controls	DET	RPN	Recommended Actions	Responsible Individual/ Organization	ACTION S Actions Taken	SEV	OCC	DET	RPN
	[illegible]	[illegible]	7		[illegible]	1	[illegible]	1	32							
	[illegible]	[illegible]	3		[illegible]	5	[illegible]	1	15	[illegible]	[illegible]					
[illegible]	[illegible]	[illegible]	7		[illegible]	1	[illegible]	1	7							
	[illegible]	[illegible]	7		[illegible]	1	[illegible]	1	7							
	[illegible]	[illegible]	7		[illegible]	3	[illegible]		21							
[illegible]	[illegible]	[illegible]	7		[illegible]	1	[illegible]	1	7			[illegible]				
	[illegible]	[illegible]	7		[illegible]	1	[illegible]	1	7			"....[illegible]...."				
[illegible]	[illegible]	[illegible]	5		[illegible]	1	[illegible]	1	5							
	[illegible]	[illegible]	6		[illegible]	3	[illegible]	1	18							
[illegible]	[illegible]	[illegible]	7		[illegible]	1	[illegible]	1	7							
	[illegible]	[illegible]	6		[illegible]	2	[illegible]	1	12							
[illegible]	[illegible]	[illegible]	7		[illegible]	1	[illegible]	1	7							
	[illegible]	[illegible]	3		[illegible]	1	[illegible]	1	7							
	[illegible]	[illegible]	6		[illegible]	1	[illegible]	1	6							

Previous Recommendations/ Purpose	Potential Failure Mode	Potential Effects of Failure	SEV	CLASS	Potential Causes of Failure	OCC	Current Controls	DET	RPN	Recommended Actions	Responsibility & Target Completion Date	SECTION 2 Action Taken	SEV	OCC	DET	RPN
[illegible]	[illegible]	[illegible]	9		[illegible]	1	[illegible]	1	9							
[illegible]	[illegible]	[illegible]	6		[illegible]	3	[illegible]	3	18	[illegible]	[illegible]					
[illegible]	[illegible]	[illegible]	7		[illegible]	5	[illegible]	2	10							
	[illegible]	[illegible]	7		[illegible]	5	[illegible]	2	20							
	[illegible]	[illegible]	6		[illegible]	1	[illegible]	1	6							
[illegible]	[illegible]	[illegible]	7		[illegible]	1	[illegible]	1	9							
	[illegible]	[illegible]	8		[illegible]	1	[illegible]	1	8							
[illegible]	[illegible]	[illegible]	8		[illegible]	1	[illegible]	1	8							
	[illegible]	[illegible]	8		[illegible]	1	[illegible]	1	8							
	[illegible]	[illegible]	7		[illegible]	1	[illegible]	1	7							
[illegible]	[illegible]	[illegible]	7		[illegible]	1	[illegible]	1	7							
	[illegible]	[illegible]	7		[illegible]	1	[illegible]	1	7							
	[illegible]	[illegible]	7		[illegible]	3	[illegible]	1	21							

Process Description/ Purpose	Potential Failure Mode	Potential Effect(s) of Failure	S E V	C L A S S	Potential Causes of Failure	O C C	Current Controls	D E T	R P N	Recommended Actions	Responsibility & Target Completion Date	ACTION RESULTS Actions Taken	S E V	O C C	D E T	R P N
[illegible]	[illegible]	[illegible]	[illegible]	[illegible]	[illegible]	[illegible]	[illegible]	[illegible]	[illegible]							

Part Name, Number & Description	Potential Failure Mode	Potential Effects of Failure	SEV	CLASS	Potential Causes of Failure	OCC	Design Verification	DET	RPN	Recommended Actions	Responsibility & Completion Date	ACTION RESULTS Actions Taken	SEV	OCC	DET	RPN
[illegible] Flange & Typically welding surface per [illegible] Provides external thread for installation into mating part Provides key feature for [illegible] wrench Provides fluid passage to pressure-tester [illegible] Provides gland for [illegible] seal Provides flange which interfaces with other components in pressure-tester structure	Fails to seal	Leakage of brake fluid	7		Improper surface finish specification Improper material modification Improperly specified torque Excessive pressure	1	Cross-check of design requirements vs. GM standard Comprehensive evaluation of design vs. tolerance limits Burst testing to specified limits	2	14							
	Fails to properly install in mating part	Damage threads in mating part during installation Does not allow installation	7	[illegible]	Threads specified improperly Threads not gauged per GMI spec's Fitting failure	7	Cross-check of per [illegible] and GMI standards	2	196	Comprehensive review of [illegible] and [illegible] standards to [illegible] and [illegible]						
	Improperly installed and fails to properly [illegible] seal and seal	Brake fluid leakage	7	[illegible]	Threads specified improperly Threads not gauged per GMI spec's Fitting failure	7	Cross-check of per [illegible] and GMI standards	2	196	Comprehensive review of [illegible] and [illegible] standards to [illegible] and [illegible]						
	Incorrect bar size	Damage to bar flow during [illegible] Drill [illegible] does not fit	5		Bar frequency [illegible] specified and not completed [illegible] spec's	1	Cross-check of per [illegible] and GMI standards	1	5							
	Fluid escapes to the shell	Hydraulic fluid from [illegible] to damage the pressure [illegible] especially at very low temp. Failure to blockage by foreign matter	7		Inadequate size of fluid passage bar drilled Inadequate review of fluid overhead [illegible]	1	Review of fluid over-head requirements [illegible]	1	7							
	Fluid passage is too large	Resulting valve will monitor engine [illegible] - during [illegible] - during [illegible]	7		Fluid passage over-drilled unnecessarily large	1	Torque testing	1	7							
	Fails to seal between [illegible] parts	Leakage of brake fluid	7		Gland dimensions improperly specified Surface finishes improperly specified Gland geometry improperly designed	1	Cross-check with recommendations of product supplier Comprehensive testing	1	7							
	Flange fails to mate properly with other components of pressure tester	Bar, too large results in non-[illegible] difficulties Bar too small results in bad component alignment Flange too thick results in poor [illegible] Flange too thin results in reduced burst capacity Improper other dimensions resulting in excess [illegible] which results [illegible]	7		Improper or improper specification of dimensions and tolerances	1	Comprehensive and analysis to determine proper dimensions for [illegible] strength Telemetry stress-strain analysis Drawing review	1	7							
	Material too soft or weak	Inadequate burst capacity Permanent/[illegible] during burst limitation or [illegible] testing Threads [illegible] if damaged, leads to possible [illegible]	7		Improper material selection	1	Comprehensive analysis of physical properties	1	7							
	Material creeps	Separation of strip leads to leakage	7		Improper material selection	1	Review of material properties	1	7							
	Material degrades in presence of contact fluids	Leakage	7		Improper material selection	1	Cross-check with similar products	1	7							
	Insufficient anti-rotational mechanism	Component which causes separation of two strips which leads to leakage or [illegible] Cosmetic problem	7		Improper or insufficient [illegible] selection	1	Comprehensive well-proven testing Review of similar products	1	20							

Subsystem/Assy: Speed Control Servomotor Pressure Switch
Section Responsibility: Engineering & Quality
Other Areas Involved:

Prepared by: Texas Instruments Inc.
High Rate Engine Group
Date:

Function, Failure & Description	Potential Failure Mode	Potential Effect(s) of Failure	SEV	CLASS	Potential Cause(s) of Failure	OCC	Design Verification	DET	RPN	Recommended Actions	Responsibility & Completion Date	Action Taken	SEV	OCC	DET	RPN
[illegible]	Poor interconnection	Device cannot [illegible]	5		Solder connection [illegible] Potential specified too high	1	Design review and [illegible] of mating connector to ensure proper interconnect and solder joints	1	10							
Provides a silver-plated surface for electrical contact Provides a Pressure for device calibration Provides flexure to ensure positive contact into base Provides flexure which acts with Spring B Force for location of contact Provides electrical path from silver plated contact to solder terminal	Made geometry for [illegible]	Difficult to install resistor [illegible]	5		Lead-in chamfers on [illegible] too small. Difficult installation Potential specified too high	1	Design review and [illegible] of mating connectors Comparison with [illegible] of similar [illegible] product	1	5							
	Fails to provide adequate electrical contact	Device cannot [illegible] Intermittent continuity High altitude drop	9	CRITICAL	Silver lacking [illegible] on base Internal contact material specified Contamination Incorrect contact material specified	3	Review of [illegible] and general contact design info Eliminate voids for [illegible] of contact design	1	27							
	Exceeding loss of contact height (Spring Contact Force)	Shift in complete over life	3		Silver lacking [illegible] Hard surface [illegible]	1	Review of [illegible] and general contact design info Life testing	1	3							
	Erosion of contact (Contact Force)	Shift in complete over life Intermittent or no continuity	3	CRITICAL	Incorrect material specified for contact [illegible]	3	Review of [illegible] and general contact design info Review and require [illegible]	1	27							
	Poor calibration	Mfg. yield loss Shift in complete over life	5		Design is [illegible] Design has [illegible] Material hardness is [illegible] Design has [illegible] to [illegible] calibration over life [illegible]	2	Mechanical [illegible] analysis Performance [illegible] Consider with [illegible] equipment	7	70							
	Contact is [illegible]	Force [illegible] Shift/[illegible] in output [illegible]	7		Insufficient [illegible] of design or [illegible] inspection	2	Comparison of [illegible] with similar [illegible] product Review evaluation	[illegible]	[illegible]	Review evaluations which may lead to recommendation of design modifications						
	Fails to properly locate contact	Intermittent [illegible] of position	3		Improper dimensions and tolerances specified [illegible] Inadequate stability design concept	3	Comparison of [illegible] with similar [illegible] product	7	63	Review alternate design concepts						
	Fails to provide adequate conductivity	High resistance shorts on high [illegible] drop	8		Improper material specified Inadequate contact [illegible]	1	Calculations of [illegible] Testing	1	8							

Part Name, Number & Description	Potential Failure Mode	Potential Effects of Failure	SEV.	CLASS.	Potential Causes of Failure	OCC.	Design Verification	DET.	RPN.	Recommended Actions	Responsibility & Completion Date	SECTION H Actions Taken	SEV.	OCC.	DET.	RPN.
[illegible]	Poor interconnection	[illegible]	[illegible]		Other [illegible] of [illegible] Potential [illegible]	[illegible]	[illegible]	[illegible]	16							
	Blade geometry [illegible]	Difficult to install [illegible]	[illegible]		[illegible] Potential [illegible]	[illegible]	[illegible] Comparison with design of similar [illegible] product	[illegible]	[illegible]							
Provide electrical [illegible]	Fails to allow [illegible]	[illegible] Inspection during [illegible] [illegible]	[illegible]	[illegible]	[illegible] [illegible] [illegible] [illegible]	[illegible]	Comparison with [illegible] Check with [illegible] Testing	[illegible]	[illegible]	Identify alternate [illegible]	[illegible]					
	Tendency to [illegible]	[illegible] [illegible]	[illegible]		Inadequate [illegible]	[illegible]	Comparison of design with similar [illegible] product Design calculations	[illegible]	[illegible]	[illegible]						
	Fails to provide [illegible]	[illegible]	[illegible]		Improper dimensions [illegible] Inadequate [illegible]	[illegible]	Comparison of design with similar [illegible] product	[illegible]	[illegible]	[illegible]						
	Fails to provide [illegible]	[illegible]	[illegible]		Insufficient [illegible] Inadequate [illegible]	[illegible]	Calculations of [illegible] Testing	[illegible]	[illegible]							

File Name: [illegible] Created on [illegible] On [illegible]

Interdepartmental Road Control Designation Standard Batch
Author: [illegible]
Batch Name: [illegible]

Design Failure Mode and [illegible] Analysis

Analyzer and Phone Extension:
[illegible]
Analyzer Submit Date:

Page [illegible] of 1

Approved by: Lead Engineer [illegible]
Job Name: [illegible] Date:

Part Name, Number & Description	Potential Failure Mode	Potential Effects of Failure	SEV	CLASS	Potential Causes of Failure	OCC	Design Validation	DET	RPN	Recommended Actions	Responsibility & Completion Date	ACTION RESULTS Actions Taken	SEV	OCC	DET	RPN
[illegible] CHOKE Provides contact force Provides electrical path from terminal contact to movable contact Provides factors to interface with transfer pin Contains movable contact Provides factors for adjustment of movable material Allows disc overtravel Provides force to open contacts	Low contact force	High milliohmic drop across contacts	6		Incorrect geometry specified Incorrect material specified	3	Beam deflection calculations Force/deflection testing	1	18							
	High contact force	Shift in setpoints Disc cracking over life	7		Incorrect geometry specified Incorrect material specified	3	Beam deflection calculations Force/deflection testing	1	21							
	Fails to provide adequate contact force	High resistance short to high milliohmic drop	5		Incorrect material specified Inadequate cross-section area	1	Calculations of cross-section area $R = \rho \frac{L}{A} > R$ Testing	1	5							
	Fails to interface correctly with transfer pin	Spring failure over life Shift in setpoints over life Damage transfer pin causes improper operation	7	C R I T I C A L	Inadequate length of feature specified Inadequate shape of feature specified Improper position of feature specified	1	Comparison of design with similar product Dimension and tolerance stackup analysis Actual measurement Testing	1	27							
	Fails to provide adequate connection for movable contact	Disengagement or erratic separation Open circuit	7		Sole electrostatic (permanently specified) Clearance inadequate	1	Short ckt. consideration Comparison of design with similar product Testing	1	7							
	Fails to adequately locate movable contact relative to stationary contact	High milliohmic drop over life Excessive contact erosion over life	7		Spring geometry incorrectly specified	3	Dimension and tolerance stackup analysis Testing	1	21							
	Fails to properly attach to movable contact	Erratic or intermittent operation Shift in setpoints Open or short circuit	7	C R I T I C A L	Blind hole stamper hitting incorrectly specified Clearance inadequate Choice of fastener angle inadequate	5	Stack mfg. consideration Comparison of design with similar product Testing	5	[illegible]	Identify alternate attachment methods, such as welding techniques	Date Failure, Mfg. Eng. resolution [illegible]					
	Fails to align contacts	Shift in setpoints Disc cracking Excess inspection at assembly Poor calibration	7		Incorrect geometry specified Incorrect material specified	3	Beam deflection calculations Force/deflection testing	1	21							
	Inadequate force to open contacts	Insufficient response to electrical calibration Short circuit	9	C R I T I C A L	Incorrect geometry specified Incorrect material specified	3	Beam deflection calculations Force/deflection testing	1	27							
	Excessive force to open contacts	Shift in setpoints Disc cracking Excess inspection at assembly Poor calibration	7		Incorrect geometry specified Incorrect material specified	3	Beam deflection calculations Force/deflection testing	1	21							

TI-NHTSA 006503

Part Name, Number & Description	Potential Failure Mode	Potential Effects of Failure	SEV	CLASS	Potential Causes of Failure	OCC	Design Validation	DET	RPN	Recommended Actions	Responsibility & Completion Date	SEVERITY	OCCURRENCE	DETECTION	RPN
[illegible]	Fails to adequately [illegible]	Spring remains about mile of [illegible] Spring falls off [illegible]	7		Improper sheet thickness for given [illegible] Improper sheet length for given material thickness Improper heat cycle Improper tubular [illegible] Improper material	1	Sheet manufacturer recommendations Comparison with similar products Testing to determine design to remove spring	1	7						
	Inadequate force [illegible]	High resistance or no [illegible] of spring [illegible]	8		Improper sheet thickness for given [illegible] Improper sheet length for given material thickness Improper heat cycle Improper tubular [illegible] Improper material	1	Sheet manufacturer recommendations Comparison with similar products Testing to determine design to remove spring	1	8						

File Name: [illegible] Created on 16:03 On [illegible]

Subsystem/Assy: Hood Control Assembly Process Detail
Other Group Involved: [illegible]

Design Failure Mode and [illegible] Analysis
Supplier and Plant Affected:
Engineering Release Date:

Page [illegible] of 1

Prepared by: Texas Instruments Inc.
Draft Due Date: [illegible] Owner:

Item Name, Number & Description	Potential Failure Mode	Potential Effects of Failure	SEV	CLASS	Potential Causes of Failure	OCC	System Verification	DET	RPN	Recommended Actions	Responsibility & Completion Date	ACTION RESULTS Actions Taken	SEV	OCC	DET	RPN
[illegible] Electrical Subsystem Interface with Actuator Provides electrical path from Controller to spring Provides means of mechanical attachment to spring Provides rigidity to minimize vibration and therefore noise attributable over time Provides a feature to retain spring against force in a particular mode	Fails to provide adequate electrical contact	Device causes spontaneous Inconvenience annoyance High millimeter drop	7	[illegible]	Contact material specified too thin Incorrect contact material specified Contamination Incorrect contact material specified	1	Review of TI manufacturer and general processing design data Minimum ratio for thickness of contact material	1	[illegible]							
	Fails to provide adequate rigidity	High temperature stress at high millimeter drop	8		Incorrect material specified	1	Review with current field manufacturer Testing	1	8							
	Inadequate attachment to spring	Shift in compliance over life Erratic operation Poor strength	7		Incorrect geometry specified Incorrect material specified	6	Manufacturer review specification Comparison with design of similar products	2	[illegible]	Review check list items which may be relevant to this failure mode	[illegible]					
	Collaboration shaft	Shift in compliance	7		Incorrect geometry specified Incorrect material specified	1	Manufacturer review specification Comparison with design of similar products	1	7							
	Inadequate force concentration	High millimeter drop	8		Incorrect geometry specified Incorrect material specified	1	Manufacturer review specification Comparison with design of similar products	1	25							
	Insufficient force concentration	Shift in compliance over life	7		Incorrect geometry specified Incorrect material specified	1	Manufacturer review specification Comparison with design of similar products	1	21							

TI-NHTSA 006505

Part Name, Number & Description	Potential Failure Mode	Potential Effect(s) of Failure	S E V	C L A S S	Potential Cause(s) of Failure	O C C	Current Design Controls	D E T	R P N	Recommended Actions	Responsibility & Completion Date	ACTION RESULTS Actions Taken	S E V	O C C	D E T	R P N
[illegible]	[illegible]	[illegible]	[illegible]	[illegible]	[illegible]	[illegible]	[illegible]	[illegible]	[illegible]							

Subcontractor Good General Resistance Pressure Relief
Valve Assembly/Air Shutoff Valve
Water Access Doorway

Equipment and Plants Affected:
Shell Non-Pressurized
Instrument Pressure Zone

Prepared by Lucas Industries Inc.
[illegible] Chart:

Part Name, Number & Description	Potential Failure Mode	Potential Effects of Failure or Effects	Sev.	Class	Potential Causes of Failure	Occ.	Design Verification	Det.	RPN	Recommended Actions	Responsibility & Completion Date	SECTION 3 Actions Taken	Sev.	Occ.	Det.	RPN
[illegible] Provides a portion of the emergency surface for displacement Provides support for compression of gasket Locates and guides recovery unit respect to sub Interfaces with seat flanges and provides a portion of [illegible] stop for valve	Fails to properly support the diaphragm	Reduced diaphragm life resulting in failure	7	C	Geometry of diaphragm support surface not specified properly Condition of edges of support surface specified improperly Clearance between support L.D. and seat flange hole is more than was made	2	Burst, leakage, and thermal cycle tests Comparison of drawings with similar products	1	14							
	Fails to allow proper gasket compression	Leakage	7		Gasket thickness is improperly specified [illegible] Gasket thickness is specified too small Gasket material and/or hardness is improperly specified	1	Burst, leakage, and thermal cycle tests Comparison of drawings with similar products	1	7							
	Connector is not properly located relative to seat	Shift in adjustment Erratic behavior	7		Improperly specified hinge [illegible] Improperly specified O.D.	1	Comparison of drawings with similar products Tolerance stackup analysis	1	7							
	Connector travel is restricted by [illegible]	Air supply relief device is stuck open/closed	7		Gasket thickness is improperly specified Gasket thickness is specified too small Gasket material and/or hardness is improperly specified L.D. of hinge [illegible] is too small	1	Burst, leakage, and thermal cycle tests Comparison of drawings with similar products Tolerance stackup analysis	1	8							
	Fails to interface correctly with seat	Difficult assembly (Gasket O.D. too large) Poor [illegible] location relative to sub (Gasket O.D. too small)	6		Gasket O.D. improperly specified	1	Comparison of drawings with similar products Tolerance stackup analysis	1	5							
	Fails to allow proper [illegible]	Reduced burst capability leads to failure Reduced fatigue resistance leads to failure	7		Thickness improperly specified O.D. improperly specified Wire condition improperly specified or [illegible]	2	Tolerance stackup analysis Burst, leakage, and thermal cycle tests	1	7							

File Name: [illegible] at 15:30 On [illegible]

Subsystem/Phase Name: General Description Pressure Relief Valve Responsibility: Stephen R. Gfeller Other Name (Analyst)

Design Failure Mode and Effect Analysis

Equipment and Figure Affected: Unit Top/Subsystem: Engineering Release Date:

Proposed Sol Texas Instruments Inc. Work Order Number [illegible] Page 1 of 1

Part Name, Number & Description	Potential Failure Mode	Potential Effects of Failure	Sev.	Class.	Potential Causes of Failure	Occ.	Design Verification	Det.	RPN	Recommended Actions	Resp/Individual Responsible & Completion Date	ACTION RESULTS Actions Taken	Sev.	Occ.	Det.	RPN
[illegible] CH1979 [illegible] and remaining loop assembly and remote detector. Provide a service for pure [illegible] and nonhazardous gas. Insert environmental protection and nonhazardous to [illegible]	Failure to hold loop to sensor overpressure	Rupture which injection Crushed loop Shift in subsystem Low loop torque allowance	7		Improper geometry of replaceable item modified Incorrect geometry as forced fault Incorrect material specified	3	Inspection, Thermal Cycle, Loop Impact, and Environmental Impact Tests	1	21							
	[illegible] Leaking	Inappropriate identified parts or [illegible]	5		Geometry/Tolerance and protrusion specified Wrong material specified	3	Cutting tests Environmental tests	1	15	Material substitution to fully make utility operation more [illegible] and understanding						
	Inability to withstand environment	Corrosion causes material [illegible] loss of mechanical properties, causes [illegible] [illegible] of sensor Disrupts sensing	7		Wrong material specified for planned [illegible]	1	Environmental tests	1	7							

TI-NHTSA 006508

File Name: [illegible] Date: [illegible]

Subsystem/Assembly: [illegible]

Design Failure Mode and Effects Analysis

Supplier and Plants Affected: [illegible]

Prepared by: [illegible] Date: [illegible]

Page [illegible] of [illegible]

Part Name, Number & Description	Potential Failure Mode	Potential Effects of Failure	SEV	CLASS	Potential Causes of Failure	OCC	Design Verification	DET	RPN	Recommended Actions	Responsibility & Completion Date	ACTION RESULTS Actions Taken	SEV	OCC	DET	RPN
[illegible]	Fails to properly [illegible]	Intolerable out of position	7		Improper dimensions [illegible] Improper [illegible]	6	Comparison with design of similar [illegible] product	8	[illegible]	Review dimensions [illegible]						
	Fails to properly [illegible]	Valve will not separate properly [illegible]	6		[illegible] Improper dimensions [illegible]	1	Review with supplier [illegible]	1	6							
	Fails to properly [illegible]	Unpleasant odor [illegible]	7		Improper material specified Improperly [illegible]	1	Comparison with design of similar [illegible] product	1	7							
	Terminal sticking in [illegible]	Loose terminals Malfunction in [illegible]	7		Improper [illegible] of [illegible]	5	Comparison with design of similar [illegible] product Sticking evaluations	8	[illegible]	Sticking evaluations [illegible]						
	Current leakage [illegible]	Shock of metal [illegible]	7		Low insulation resistance Improper material specified	1	Comparison with design of similar [illegible] product Material evaluation	1	7							
	Fails to electrically isolate [illegible]	High current leakage High activate drop Irregular or inoperative [illegible]	7		Improper material specified Poor solder joint [illegible]	1	Comparison with design of similar [illegible] product Review review with [illegible] Field flow analysis	1	7							
	Fails to properly [illegible]	Shift in [illegible] Irregular or inoperative [illegible]	7		Improper [illegible] Improper [illegible]	3	Specification of [illegible] Raise this surface to prevent [illegible] Integrate startup [illegible]	1	21							
	Improper [illegible]	Improper [illegible] may lead to leakage of [illegible] Excessive [illegible] may [illegible]	7	C [illegible]	Improper [illegible] Storage	3	Review of standard [illegible] design [illegible] Experience on similar [illegible] Manager certified [illegible]	1	27							
	Fails to properly [illegible]	[illegible]	6		Design of [illegible]	3	Calculation and [illegible]	1	18							
	Fails to provide [illegible]	[illegible] [illegible]	7		Improper design of [illegible]	1	Comparison with design of similar [illegible] product	1	7	[illegible]						
	Fitting [illegible]	Operator difficulty in [illegible] Operator falls off	7		Improper [illegible]	1	Review of dimensions [illegible]	1	7							
	Fitting [illegible]	Impact of water [illegible] Operator difficulty in [illegible] Operator falls off	9	C [illegible]	Operator [illegible] Improper material specified	3	Review of dimensions [illegible] Material evaluation	1	27							

Part Name, Number & Description	Potential Failure Mode	Potential Effect(s) of Failure	SEV	CLASS	Potential Cause(s) of Failure	OCC	Design Verification	DET	RPN	Recommended Actions	Responsibility & Completion Date	ACTION RESULTS Actions Taken	SEV	OCC	DET	RPN
Straight Pin clamp Fastener that retains an item in an assembled position Stainless stamped square-hole from rubber bumper	Fails to separate element or block assembly	Customer check valve Customer check closed Erratic operation	8		Manufacturer incorrectly supplied Chips/foreign matter enter die or tubes	1	Reference standard, component job aid and die details to use Check with supplier for material pre-shipment re. defect	1	8							
	Fails to tumbleur	Continuity between supplies equipment and housing to ground	5		Among commercial equipment	1	Check with supplier for material pre-shipment Check with engineer for material/tools to assembly standard	1	5	Check with Ford or Ford and supplier tables of assembly tools, for general, non-critical standard						

Part Name, Number & Description	Potential Failure Mode	Potential Effects of Failure	S E V	C L A S S	Potential Causes of Failure	O C C	Design Controls	D E T	R P N	Recommended Actions	Responsibility & Completion Date	SECTION X Actions Taken	S E V	O C C	D E T	R P N
[illegible]	Concentrate enter motor [illegible]	High current failure High wattbrake drag Breaking or temperature [illegible] operation	7		Gasket, diaphragm is specified not well Limits on parameter not specified Improper material	1	Review of standard operation for plant design Design with product manufacturer Operating of design with similar product	1	7							
	Blow remove too quickly	Damaged or inadequate for [illegible] service assessment	7		Gasket, diaphragm part properly specified	1	Review of standard operation for plant design Temperature-pressure limiting Operating of design with similar product	1	7							

Part Name, Number & Description	Potential Failure Mode	Potential Effects of Failure	S E V	C L A S S	Potential Causes of Failure	O C C	Design Validation	D E T	R P N	Recommended Actions	Area/Individual Responsible & Completion Date	ACTION RESULTS Actions Taken	S E V	O C C	D E T	R P N
[illegible]	Fails to provide a [illegible] for [illegible]	Leakage Reduced [illegible] life	7		Crimp will shield [illegible] Crimp will [illegible] Improper material [illegible]	1	Seal and [illegible] testing Comparison of design with similar systems	1	7							
[illegible]	Fails to correctly [illegible]	[illegible] Leakage Reduced discharge life	7		[illegible]	1	Telepower [illegible] analysis	1	7							
[illegible]	Fails to support [illegible]	[illegible] [illegible] [illegible] Reduced disc life	7		Improper disc [illegible] Poor transmission [illegible] Poor surface [illegible]	5	Telepower [illegible] Inspection [illegible]	1	35							
	Fails to guide [illegible] correctly	[illegible] Induces stack short-circuits	7		Pin guide [illegible]	1	Telepower [illegible] analysis	1	7							
	Fails to allow a proper [illegible]	Impact of [illegible] [illegible]	7		Surface condition [illegible] Improper [illegible]	1	Environmental [illegible] [illegible] [illegible]	1	7							
	Fails to properly [illegible]	[illegible] [illegible]	7		[illegible]	1	Telepower [illegible] analysis Comparison with [illegible]	1	7							
	Fails to allow proper final assembly with other [illegible]	[illegible] Impact of [illegible] [illegible]	7		Poor [illegible]	1	Telepower [illegible] Base torque [illegible]	1	7							

File Name: [illegible] Created on [illegible] Design Failure Mode and [illegible] Analysis

Subcontractor: Sand Control Specialists Pressure Relief Valve Assembly, Part Number [illegible]

Reviewers and Phone Numbers: [illegible]

Approved by: Exxon Instruments Inc. Part Name Number: [illegible] Date: [illegible]

Page [illegible] of 1

Part Name, Number & Description	Potential Failure Mode	Potential Effects of Failure	SEV	CLASS	Potential Causes of Failure	OCC	Design Controls	DET	RPN	Recommended Actions	Responsibility & Completion Date	ACTION RESULTS Actions Taken	SEV	OCC	DET	RPN
[illegible]	Fails to actuate upon valve failure at the proper pressure or actuates	Dip, yield loss	5		Wear expected for properly specified Wear's and tear's for properly specified	1	Operator/service overhauls Operations of design with similar products	3	15							
	Does operation under or outside temperature range specified over life	Shift in device response over life	7		Wear expected for properly specified Wear hardware for properly specified Material stickiness properly specified	2	Regular testing Pre- and post-installations	2	28							
	Operation life shorter than customer user requirements	Downtime shift in response over life Spring fatigue - open circuit	7		Wear expected for properly specified Wear hardware for properly specified Material stickiness properly specified	2	Regular testing Pre- and post-installations	2	28							

Part Name, Number & Description	Potential Failure Mode	Potential Effects of Failure	SEV	CLASS	Potential Causes of Failure	OCC	Design Validation	DET	RPN	Recommended Action	Responsibility & Completion Date	ACTION RESULTS Actions Taken	SEV	OCC	DET	RPN
[illegible]	[illegible] to outside	Under Field Isolation	7		[illegible] [illegible] [illegible] [illegible] [illegible] [illegible]	1	[illegible]	1	7	[illegible]						
	Change in area of [illegible] over life	[illegible] to outside over life	7		[illegible] Blockage too will Insufficient [illegible]	1	[illegible]	1	7							
	Excessive change of [illegible]	[illegible]	7		Blockage too will Insufficient [illegible]	1	[illegible]	1	7							

File Name: [illegible] Dated: [illegible] to [illegible]

Subcomponent: Steel Central Downpipe Pressure Relief Valve Downstream Flange Section B [illegible]
Other Comp Involved:

Design Failure Mode and [illegible] Analysis

Supplier and Plant Affected:
Part Number(s):
Engineering Release Date:

Prepared for Texas Instruments, Inc.
PRR Rev. Weight: [illegible] Date:

Page [illegible] of 1

Part Name, Number & Description	Potential Failure Mode	Potential Effects of Failure	SEV	CLASS	Potential Causes of Failure	OCC	Design Verification	DET	RPN	Recommended Actions	Responsibility & Completion Date	ACTION RESULTS Actions Taken	SEV	OCC	DET	RPN
[illegible] (CONT) Provide alignment and support to disc Provide a portion of the support surface for diaphragm Provide disc support during overpressure (proof burst) Act in tandem provide pressure sealing from atmosphere outboard	Fails to properly [illegible] pressure in force on disc	Shift in resonance	7		Design G.D. power supply specified variation in radius [illegible] Converter under G.D. [illegible] variation in [illegible] Converter thickness [illegible] Incorrect material specified	1	Dynamic stress analysis Force/deflection analysis to determine [illegible] and [illegible] to disc [illegible] Burst, fatigue, and thermal cycle tests	1	7							
	Fails to properly align and support disc	Excess tolerance after [illegible] shift in resonance or excess operation Disc out-of-plane relative to [illegible] may cause [illegible]	8		Design G.D. power supply specified variation in radius [illegible] Converter under G.D. [illegible] variation in [illegible] Disc support has [illegible] Disc retaining wall [illegible]	3	Dynamic stress analysis Comparison of design with similar products	1	24							
	Fails to properly [illegible] diaphragm	Reduced diaphragm life resulting in leakage	7		Contact of surface in contact with [illegible] may [illegible] Oxidation of [illegible] may [illegible] Clearance between diaphragm [illegible] and radius [illegible]	3	Burst, fatigue, and thermal cycle tests Comparison of design with similar products	1	21							
	Fails to properly support disc during overpressure	Disc deformation results in shift in resonance Reduced disc life Reduced disc travel, if disc [illegible]	7		Diaphragm which contacts disc radius [illegible]	2	Pre- and post-proof [illegible] Dimensional/fatigue measurements of disc radius	1	14							
	Does not have pre-[illegible]	Shift in resonance over time. Reduced disc stop [illegible]	2		Not fully [illegible] in manufacture	4	Comparison of design with similar products Dimensional disc measurements	1	7							

Part Name, Number & Description	Potential Failure Mode	Potential Effects of Failure	S E V	C L A S S	Potential Causes of Failure	O C C	Design Validation	D E T	R P N	Recommended Actions	Responsibility & Completion Date	SECTION B Actions Taken	S E V	O C C	D E T	R P N
[illegible] Pressure Switch between disc and connector Elbow assembly of pressure sensor by disc and connector	Fails to differentially reduce Pressure	Unable to maintain rear line Reduced disc life	7		Incorrect material specified Incorrect dimensions specified	1	Design and Thermal Cycle tests Pre- and Post-life dimensional inspection Telegram standard inspection	1	7							
	Fails to allow cooling	Unable to maintain rear temp. Reduced disc wear rates	7		Part lying incorrectly in equipment	1	Comparison of dimensions with similar products Telegram standard inspection	1	7							

ACME MILFORD
857 BRIDGEPORT AVE.
MILFORD, CONNECTICUT 06460

TEL\ 203-878-4631 x FAX 203-878-3071

TO: TEXAS INSTRUMENTS

CERTIFICATE OF COMPLIANCE

ACME MILFORD CERTIFIES THAT;

P.O. NUMBER: 500011076
ACME/MILFORD CONTROL NUMBER: 17642
ACME/MILFORD P/N: 6254-A
QUANTITY: 915425

WAS PROCESSED TO CONFORM TO THE FOLLOWING

PART NUMBER: 7440G-1
PART REVISION: D .
MATERIAL: COPPER CDA 102

HEAT NUMBER:
TENSILE AFTER LIGHT DRAW:
FINISH: .0011-.0024 SILVER PLATE
; (.0007 MIN OVER VENT)

SIGNED: DATE: 09-06-91

JOHN MICHAUD
TITLE\ QUALITY CONTROL MANAGER

SWORN TO AND SUBSCRIBED BEFORE ME THIS/_____DAY_____MONTH_____YEAR

NOTARY PUBLIC_____

RADCLIFF WIRE INC.

FLAT, SQUARE AND SHAPED WIRE

Phosphor Bronze • Brass • Nickel Silver

RONZO ROAD • P.O.BOX 603 • BRISTOL, CONNECTICUT 06010
TELEPHONE: 203 / 583-1305 • FAX: 203 / 583-6553

ORDER NO. 532

MATERIAL CERTIFI

SOLD TO

ACME MILFORD
857 BRIDGEPORT AVENUE
MILFORD, CT 06460

SHIP TO

VIA SUNTINES

YOUR ORDER NO.	DATE ENTERED	DATE WANTED	DATE PROMISED	F.O.B.
347-2	6/28/91	7/29/91		Bristol

QTY/WEIGHT ORDERED	SIZE/TOLERANCE	SHAPE
300 lbs.	.0575 p/m .0005 Dia.	Round

TEMPER	MATERIAL	EDGE	FINISH
	ETP 110 Copper		

SPECS	TENSILE	[redacted]
	45-55,000 PSI	

SPECIAL CONDITIONS

CERTS/MATL.

SPOOL-COIL

SHIPPING RECORD

DATE	QUANTITY	PACKAGING	TEST
7/16/91	323#	1 Barrel	46,000 PSI

HEAT	C	MN	SI	S	P	Cr	Al	Cu	B	Fe	A
HARDNESS	TI	CB – TA	Co	MO	V	Mg	Ce	N	Zn	Pb	
TENSILE STR. 46,000 PSI	ZA	CB	TA	Sn	Se						

*this is to cercify that the above wire was procced from raw material and was found co be incompliance with the specifications of your po#347-2.

RADCLIFF WIRE, INC.

Claire Boucher

AUTHORIZED SIGNATURE

Claire Boucher Quality Control Manager

TI-NHTSA 006518

AMERICAN ELECTRO PRODUCTS INC.
1358 THOMASTON AVENUE
WATERBURY, CT 06704
(203) 756-7051

Certificate of Compliance

NO. 21#54327
REL# 1

HILFORD RIVET & NACH
937 BRIDGEPORT AVE

HILFORD CT 06460

DATE 06/20/91

YOUR ORDER NO. 133928
SHIPPED VIA UNITED P. S.

This is to verify that parts and/or your material furnished against your purchase order number shown above, have been manufactured in accordance with requirements and specification as required.

PART NO.	DESCRIPTION	QUANTITY
6254A	SILVER 0.094100-0.092400 MAX	720 REL 0

Tests to substantiate this have been performed in our plant (or have been performed by our suppliers) and are available upon request from us/or our suppliers.

Very truly yours,
AMERICAN ELECTRO PRODUCTS, INC.
Signed by: [signature]
Q.C. Inspector

TI-NHTSA 006519

MOVABLE CONTACT

REV. D — 74408

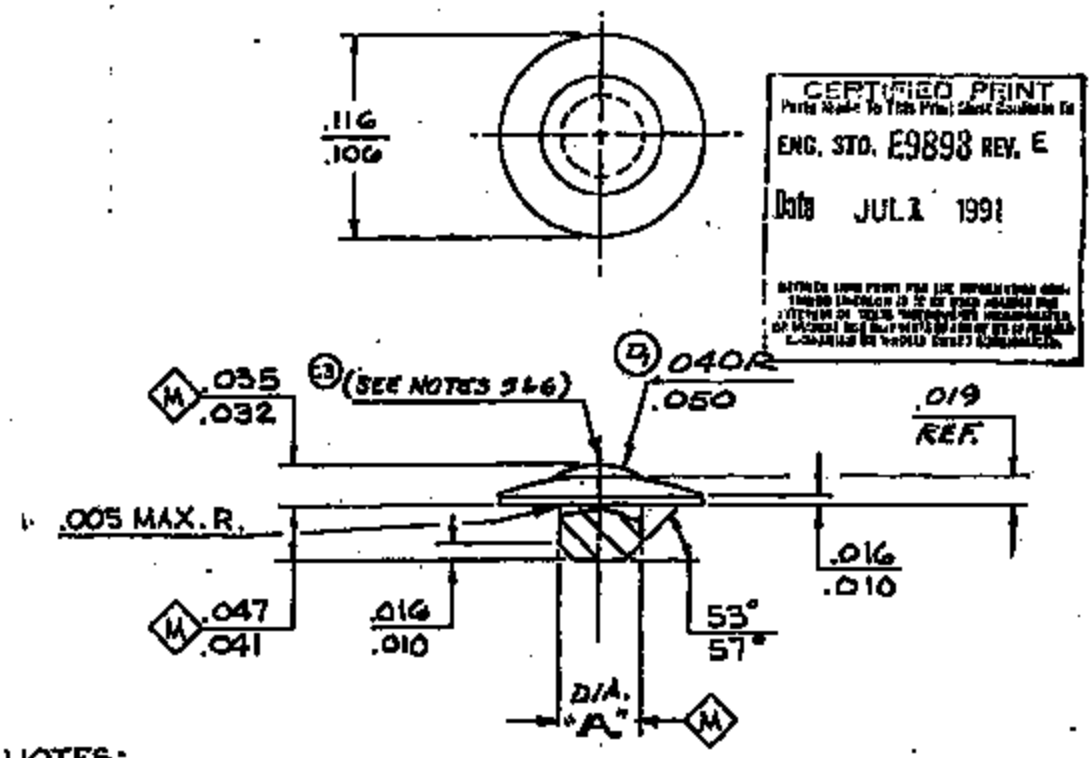

NOTES:

1. PARTS MUST BE STORED IN PLASTIC BAGS THROUGH ALL SHIPPING AND HANDLING PROCESSES.
2. MATERIAL & PLATING THICKNESS CERTIFICATION REQUIRED WITH EACH SHIPMENT.
3. DIMENSIONS APPLY AFTER PLATING.
4. MEASURE PLATING THICKNESS BY MOUNTING & CROSS-SECTIONING PART.
5. PLATING THICKNESS APPLIES AT THE INDICATED LOCATION ONLY.
6. TOOL VENT MARK ON .040-.050 R ALLOWED. DIMENSIONS MAY NOT EXCEED .001 IN HEIGHT AND .003 IN WIDTH. THERE MUST BE NO VOID IN PLATING IN THIS AREA. .032-.035 DIMENSION MAY MEASURE .036 OVER THIS MARK.
7. PLATING THICKNESS OF .0007 MINIMUM ALLOWED ABOVE TOOL VENT MARK ONLY. ADJACENT AREAS MUST MEET "FINISH" REQUIREMENTS.

PART NO.	MATERIAL	FINISH	DIA. "A"
74408-1	COPPER	SILVER PLT. .0011/.0024 THK. (SEE NOTE 4 & 5)	.0605-.063

TEXAS INSTRUMENTS INCORPORATED

KIDDON

REV. A — 74408

TI-NHTSA 006520

THE MILFORD GROUP
837 BRIDGEPORT AVE.
MILFORD, CONNECTICUT 06460

TEL: 203-878-4671 * FAX 203-878-5071, 203-876-1346

TO: TEXAS INSTRUMENTS

CERTIFICATE OF COMPLIANCE

ACME MILFORD CERTIFIES THAT;

P.O. NUMBER: 500086022
ACME/MILFORD CONTROL NUMBER: 021679
ACME/MILFORD P/N: 6051-AX.067
QUANTITY: 191630

WAS PROCESSED TO CONFORM TO THE FOLLOWING

PART NUMBER: 74171-1
PART REVISION: M/FC
MATERIAL: BRASS CDA230

HEAT NUMBER:
TENSILE AFTER LIGHT DRAW:
FINISH: BRITE FREE OF OIL

SIGNED: James Desmarais DATE: 07-06-92

JAMES DESMARAIS
TITLE: QUALITY ASSURANCE DIRECTOR

SWORN TO AND SUBSCRIBED BEFORE ME THIS/_____DAY_____MONTH_____/EAR

NOTARY PUBLIC_____/_____

#74171-1

MECHWIN CORPORATION
460 NEPPERHAN AVENUE
YONKERS, N.Y. 10701

****
*** CERTIFICATE OF ANALYSIS AND COMPLIANCE ***
****

.CT: 38500 FEB 3 1992

ACME MILFORD
857 BRIDGEPORT AVENUE
MILFORD, CT. 06460

MWC # 7741
P.O.: 1365
OUR INVOICE: 8532
DELIVERY DATE: 01/29/92

SIZE: .0370

ALLOY: 360

ASTM: B 134

FINISH: B

TENSILE STRENGTH: 61.4 KSI

R.I.A.: %

ELONGATION:

ROCKWELL HARDNESS:

GRAIN SIZE AT FINAL ANNEAL:

ELECTRICAL CONDUCTIVITY: %

TEMPER DESIGNATION: H00

CHEMICAL ANALYSIS:

CU	ZN	PB	FE	SN
59.500	BAL	0.003	0.019	
AL	MN	NI	SI	P

OTHER:

WE CERTIFY THAT THIS SHIPMENT CONFORMS TO THE CHEMICAL AND PHYSICAL PROPERTIES SHOWN ABOVE, AND IS IN COMPLIANCE WITH THE SPECIFICATIONS OF THIS ORDER

MECHWIN CORPORATION

Dated: 01/30/92

By: E.C. [illegible]

TI-NHTSA 006522

TITLE: RIVET

REV. B

74171

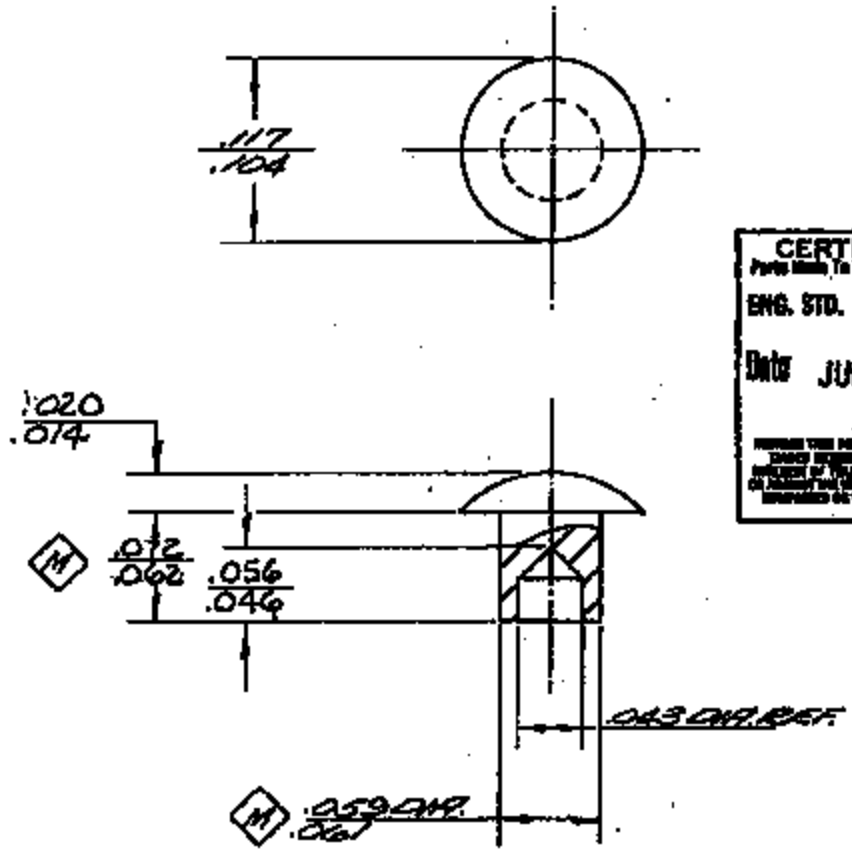

CERTIFIED PRINT
Parts Made To This Print Must Conform To
ENG. STD. E9898 REV. E
Date JUL 16 1992

NOTE:
1. PARTS MUST BE STORED IN ANTISTATIC BAGS THRU ALL SHIPPING AND HANDLING PROCESSES

PART NO.	MATERIAL
74171-1	COP #260 BRASS

BY	CH.	ENG.
2-1-94	K.H. Wen 2-12-94	2/12/94

TEXAS INSTRUMENTS INCORPORATED
ATTLEBORO, MASS., U.S.A.

KIDDON

SIZE A

74171

TI-NHTSA 008523

August 20, 1991

To: Donna Moynihan 12-27

From: Beth Kill 10-16

Subject: GP-3 Material Confirmation
TSL Request # 110824

Sample Description:

P/N 36887-1 Moving Terminal CDA 260 Brass
1/2 Hard

Results:

	P/N 36887-1	Spec. CDA 260
Cu (wt%)	68.7%	68.5 - 71.5%
Fe	0.020	0.05 max
Pb	0.010	0.07 max
Zn	balance	balance
Hardness	80.5 RB	60 - 77 RB

Results confirm the terminal is made of CDA 260 brass, and slightly above 1/2 hard.

Regards,

Beth X3069

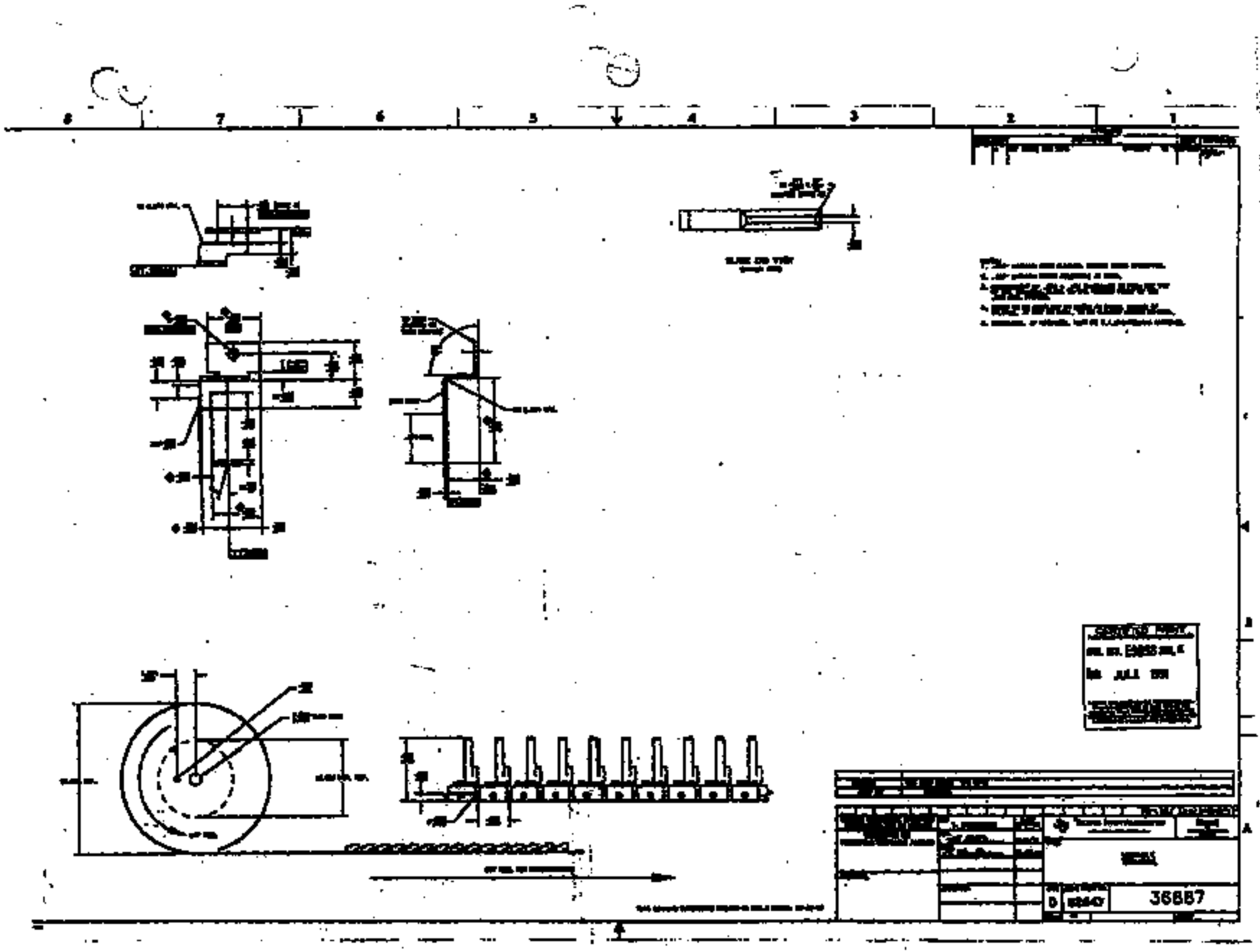
36887

August 20, 1991

To: Donna Moynihan 12-27

From: Beth Kill 10-16

Subject: GP-3 Material Confirmation
TSL Request # 110825

Sample Description:

P/N 36889-1 Spring C17200 Beryllium Copper

Results:

	P/N 36889-1	Spec. C17200
Be (wt%)	1.87%	1.80 - 2.00%
Fe	0.089	
Ni	0.068	[Fe + Ni + Co <0.6%] [Ni + Co →0.2%]
Co	0.220	
Hardness	300 DPH	285 - 343 DPH

Results confirm the spring is made of C17200 beryllium copper at the specified hardness.

Regards,

Beth X3069

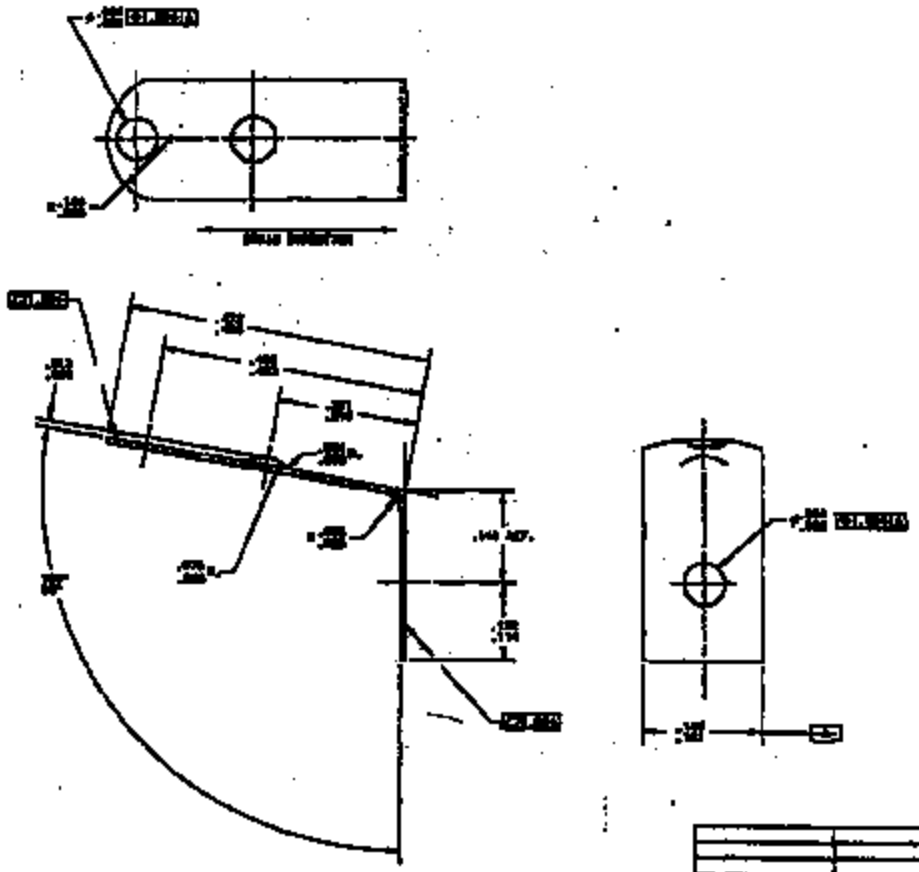

TEXAS INSTRUMENTS

SPRING ARM

C | 82647 | 36889

TI-NHTSA 006627

REVISIONS				
ZONE	LTR	DESCRIPTION	DATE	APPROVED
	B	1. ZONE 4 ZONE WAS ADD. 2. ADDED NOTE 8.	1-24-91	

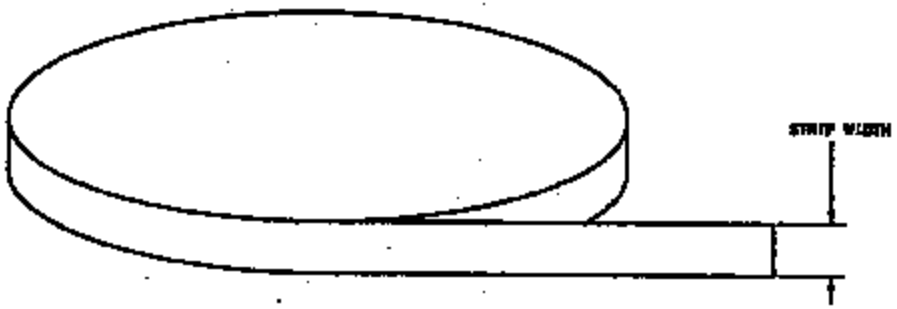

NOTES:

1. MATERIAL CERTIFICATION INCLUDING TENSILE STRENGTH AND HARDNESS DATA MOUNTED WITH EACH SHIPMENT.
2. EACH REEL TO BE LABELED WITH T.I. PART NUMBER ON INSIDE OF CORE.
3. MAX. ALLOWABLE BURR .001.
4. ROLLS SLITTED FROM EDGE OF MASTER COIL NOT ACCEPTABLE.
5. MAX. WEIGHT PER REEL 15 TO 100 LBS.
6. ROLL TO BE PACKAGE STYLE.
   12" TO 36" I.D.
   [illegible] MAX. O.D.
   [illegible] DRIVE HOLE
7. NO SPLICES ALLOWED.

CERTIFIED PRINT
DWG. NO. E9898 REV. E
DATE JUL 1 1991

27715-1	BERYLLIUM COPPER C17200, MILL HARDENED (BRUSH BERYLLIUM ALLOY 165 HM)	135-180	285-345	.025 ±.0002	.151-.165	TBD
PART NO	MATERIAL	TENSILE STRENGTH (KSI)	HARDNESS DPH	THICKNESS (IN)	STRIP WIDTH	PKG PUT UP (LB) (OZ)

THIS DRAWING SUPERSEDES 27715001 REV.A DATED 11-14-60

DRAWING CONTROL ORIGINATOR CONFIRMATION AND IN ACTION	BY T. BRUCKMAN	DATE 11-14-60	TEXAS INSTRUMENTS
TECHNICAL DATA CONTROL ORIGINATOR		1-21-91	
			SPRING MATERIAL STRIP SPECIFICATION
			SIZE B · 82647 · 27716SH1

TI-NHT9A 008528

CERTIFICATION

June 3, 1992

TEXAS INSTRUMENTS
ACCTS PAYABLE DEPT
P.O. BOX 666
ATTLEBORO, MA 02703

This is to certify the parts furnished on your purchase order have been produced in accordance with specifications listed on your purchase order and/or blueprint. This certification and accompanying documents may not be reproduced, except in full, without written approval of Elco Industries, Inc.

INSPECTION SHEET, MILL SHEET AND SAMPLES ATTACHED

REV.: A

SAMPLES FOR S.O. # 20778 SENT WITH PREVIOUS SHIPMENTS

Records covering material used and the tests and inspection conducted are on file, subject to examination. This is an original certification and has not been amended unless stated below.

Purchase Order No.	505106996
Register No.	50347
Part No.	35900-1
Description	3/8-24 X .81
Quality Control No.	A9341-S
Mfg. Lot No.(s)	20778
Quantity	6,915

Authorized Signature
Quality Coordinator

CERTIFICATION

ELCO INDUSTRIES, INC.
PRECISION AUTOMOTIVE DIVISION
1111 Samuelson Road • P.O. Box 7009
Rockford, Illinois 61125-7009
815/397-5151 • Fax 815/399-4559

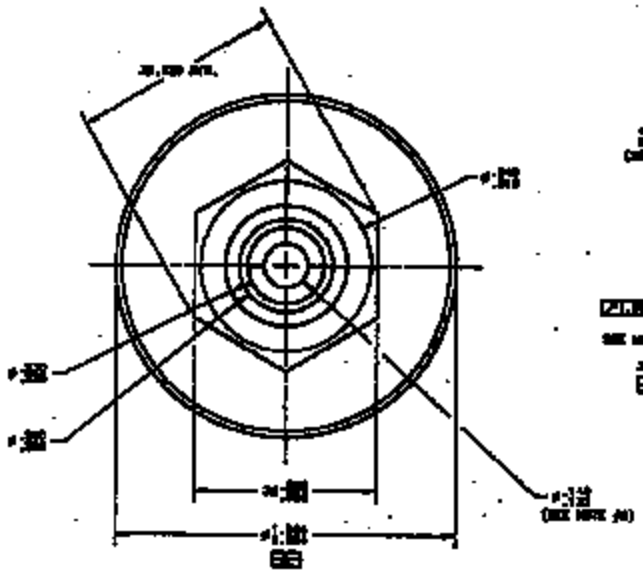

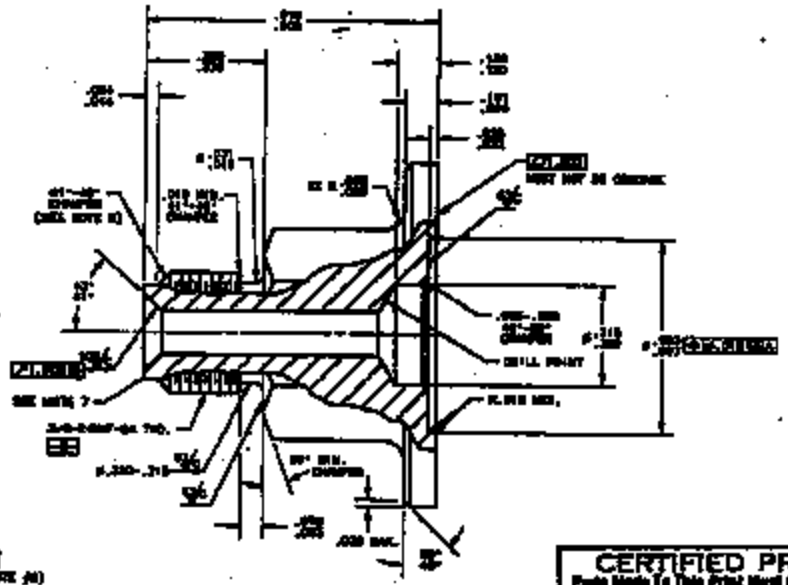

CERTIFIED PRINT
Parts Made To This Print Must Conform To
ENG. STD. E9898 REV. E
Date JUN 22 1992

NOTE:
1. [illegible] AFTER PLATING.
2. PARTS TO BE SHIPPED, PACKED, AND STORED IN SEALED PLASTIC BAGS.
3. FINISHED PART FLANGE MARKING TO BE ROCKWELL 6-23 [illegible].
4. THREAD MUST [illegible] TO FIRM SPOT. [illegible]
5. [illegible] MAX. [illegible] .120 - .140 [illegible] HOLE [illegible] OUT OF PART.
6. [illegible] CHAMFER ANGLE APPLIES [illegible] THREAD.
7. [illegible] 45° REF. CHAMFER [illegible] MAX.

[illegible]	STAINLESS STEEL	[illegible]
[illegible]	[illegible]	[illegible]

UNLESS OTHERWISE SPECIFIED DIMENSIONS ARE IN INCHES
TOLERANCE ON FRACTIONS DECIMALS ANGLES
MATERIAL

BY	J. D. MAXWELL	DATE 10-19-[illegible]
CK.		
ENG.		
APPROVED		DATE

TEXAS INSTRUMENTS

TITLE
MODIFIED SAE J512
HEX PORT

SIZE	DWG. NUMBER	
C	62647	36900

SHEET 1 OF 1

TI-NHTSA 006530

MATERIAL
ANALYSIS

121781

TEXAS INSTRUMENTS

CERTIFICATION OF COMPLIANCE TEST

CUSTOMER: DANA CORPORATION

CUSTOMER ORDER NO.: _____ TI ORDER NO.: _____

CUSTOMER PART NO.: F2AC-9F924-AA TI PART NO.: 77PSL3-1

CUSTOMER SPEC: _____ TI SR: _____

QUANTITY: 6 pcs DATE SHIPPED: 8/20/92

IT IS HEREBY CERTIFIED THAT THE GOODS SPECIFIED ABOVE CONFORM TO THE TI ORDER SHOWN ABOVE, AS REVISED BY MUTUALLY AGREED WRITTEN AMENDMENTS, IF ANY. Further, component parts utilized have been scrutinized and do not violate Ford Engineering Materials Specifications WSS-M99P9999-A1/A2/A3 restrictions.

J. Watt, Qcr Engr.
PRECISION CONTROLS QUALITY CONTROL

DATED: 8/20/92

TEXAS INSTRUMENTS INCORPORATED • 34 FOREST STREET • ATTLEBORO MA 02703

TI-NHTSA 006532

TEXAS INSTRUMENTS

CERTIFICATION OF COMPLIANCE TEST

CUSTOMER: DANA CORPORATION

CUSTOMER ORDER NO.: _____ TI ORDER NO.: _____

CUSTOMER PART NO.: F2AC-9F924-AA TI PART NO.: 77PSL3-1

CUSTOMER SPEC: _____ TI SR: _____

QUANTITY: 6 pcs DATE SHIPPED: 8/20/92

IT IS HEREBY CERTIFIED THAT THE GOODS SPECIFIED ABOVE CONFORM TO THE TI ORDER SHOWN ABOVE, AS REVISED BY MUTUALLY AGREED WRITTEN AMENDMENTS, IF ANY.. Further, component parts utilized have been scrutinized and do not violate Ford Engineering Materials Specifications WSS-M99P9999-A1/A2/A3 restrictions.

J. Whatt, QCA Engr
PRECISION CONTROLS QUALITY CONTROL

DATED: 8/20/92

TEXAS INSTRUMENTS INCORPORATED • 34 FOREST STREET • ATTLEBORO, MA 02703

TI-NHTSA 006533

F2AC-9F924-AA

MATERIAL ANALYSIS

PARTS LIST

	PART NAME	PART #	CERTIFIED
1	BASE	46515-3	YES
2	STA.TERM.	36888-1	YES
3	MOVE.CONTACT	74408-1	YES
4	RIVET	74171-1	YES
5	MOVE.TERM.	36887-1	YES
6	SPRING ARM	36889-1	YES
7	J512 HEXPORT	36900-1	YES
8	GASKET	74353-1	YES
9	CUP	27713-1	YES
10	SEAL	74176-1	YES
11	KAPTON STRIP	27225-1	YES
12	WASHER	27639-1	YES
13	CONVERTER	27406-1	YES
14	KAPTON TAPE	74224-1	YES
15	SPACER	73958-2/-3	YES
16	CRIMP RING	74797-1	YES
17	TRANSFER PIN	74078-SEL	YES
18	ENVIO.SEAL	74247-4	YES

Product Quality Documentation

CERTIFICATE OF COMPLIANC

Customer Order Number	Customer Part Number	GE Requisition Number	Material, Grade and Color
NBLE/SCH FIXR		1281498/1	NFA1, 070830 111

Lot Number	Qty Shipped	U.M.	Shipped From	Date Shipped	Shipper's Number
H92311	100	LB	NFSE SERVICE INC	04/06/92	01329155

It is hereby certified that the product indicated above conforms to our standard internal specifications for the designated material. This certification is subject to our standard conditions of sale applying to products sold by the General Electric Company.

Specification

Specification Originator

Specification Comments

TEST	REFERENCE	REQUIREMENT	(ENGLISH)	(METRIC)
LOT DATA:				
HDT @264 PSI - 1/4"	ASTM D648	450.0 DEG F MINIMUM	460.0 DEG F	238 DEG C
NOTCHED IZOD IMPACT-1/8"	ASTM D256	1.5 FT-LB/IN MINIMUM	2.0 FT-LB/IN	107.0 J/M
% ELONGATION	ASTM D638	4 % MINIMUM	8 %	
TENSILE YIELD	ASTM D638	20,000 PSI MINIMUM	28,600 PSI	198.9 MPA
FLEXURAL MODULUS	ASTM D790	1,000,000 PSI MINIMUM	1,265,000 PSI	8,715.9 MPA
FLEXURAL STR @ YIELD	ASTM D790	28,000 PSI MINIMUM	37,800 PSI	261.8 MPA
SPECIFIC GRAVITY	ASTM D792	1.31-1.35 G/CC		1.33 G/CC
MOISTURE CONTENT	KARL FISCHER	0.50 % MAXIMUM	0.09 %	
PRODUCT AUDIT DATA:			**DATE OF LAST AUDIT: 05/91**	
FLAMMABILITY,.102" THICK	FMVSS 302	4.00 IN/MIN MAXIMUM	SELF-EXTINGUISHING W/NO BURN RATE	

ROBERT D. HOPKINS
Quality Manager

THOMAS HEEPS
Manufacturing Manager

If you have any questions concerning this, please contact:

GRAY GUIGESRIA

1-510-475-5000

TEXAS INSTRUMENTS INC
ACCOUNTS PAYABLE DEPT
PO BOX 655
ATTLEBORO MA 02703-0662
Attn: JIM KEAN

04-08-92 03:22 PM - P01

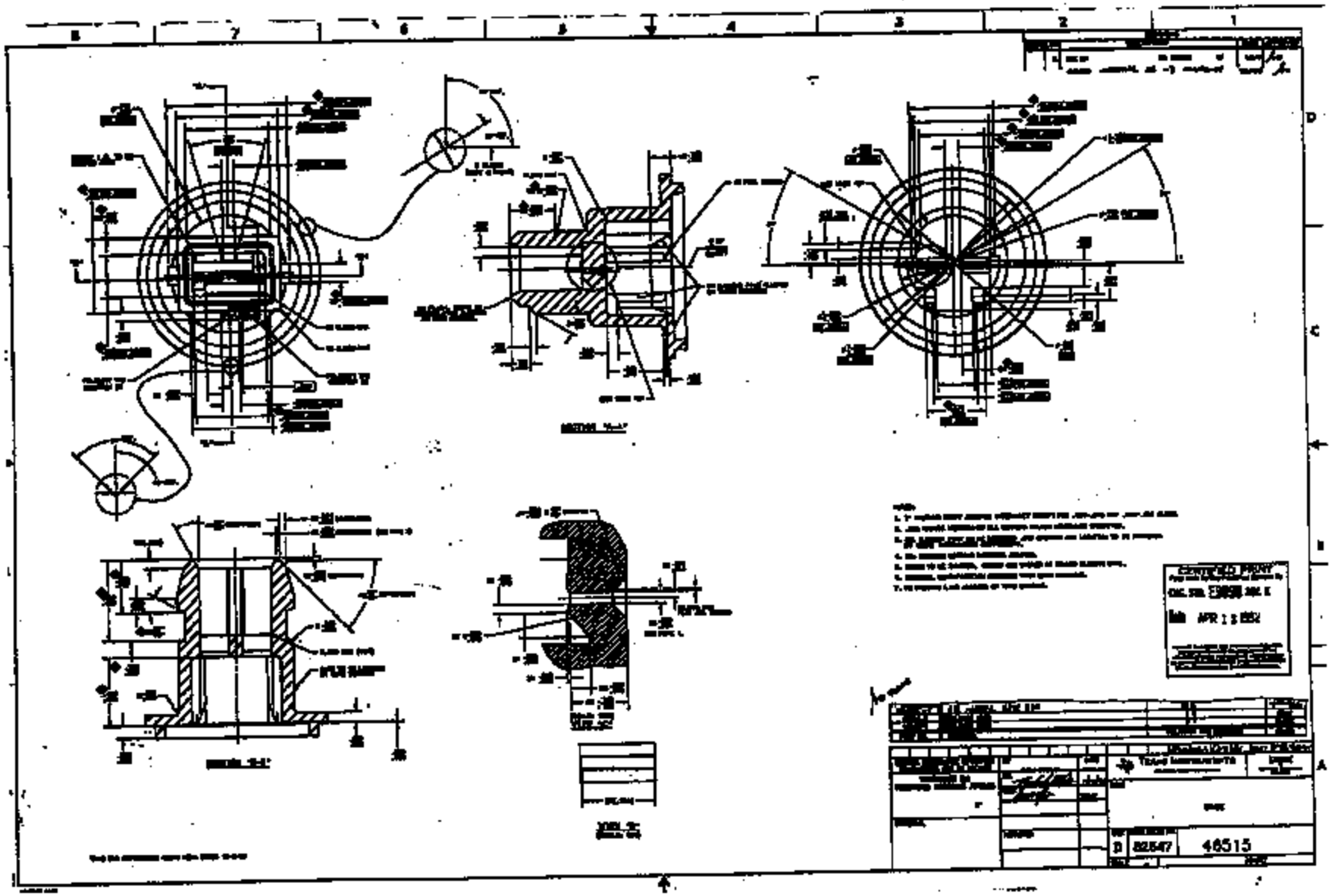
APR 1 1 1992
D 82547 46515

August 20, 1991

TO: Donna Moynihan 12-27

From: Beth Kill 10-16

Subject: GP-3 Material Confirmation
TSL Request # 110823

Sample Description:

P/N 36888-1 Stationery Terminal CDA 260 Brass
1/2 Hard

Results:

	P/N 36888-1	Spec. CDA 260
Cu (wt%)	68.5%	68.5 - 71.5%
Fe	0.030	0.05 max
Pb	0.010	0.07 max
Zn	balance	balance
Hardness	73 RB	60 - 77 RB

Results confirm the terminal is made of CDA 260 brass, 1/2 hard.

Regards,

Beth X3069

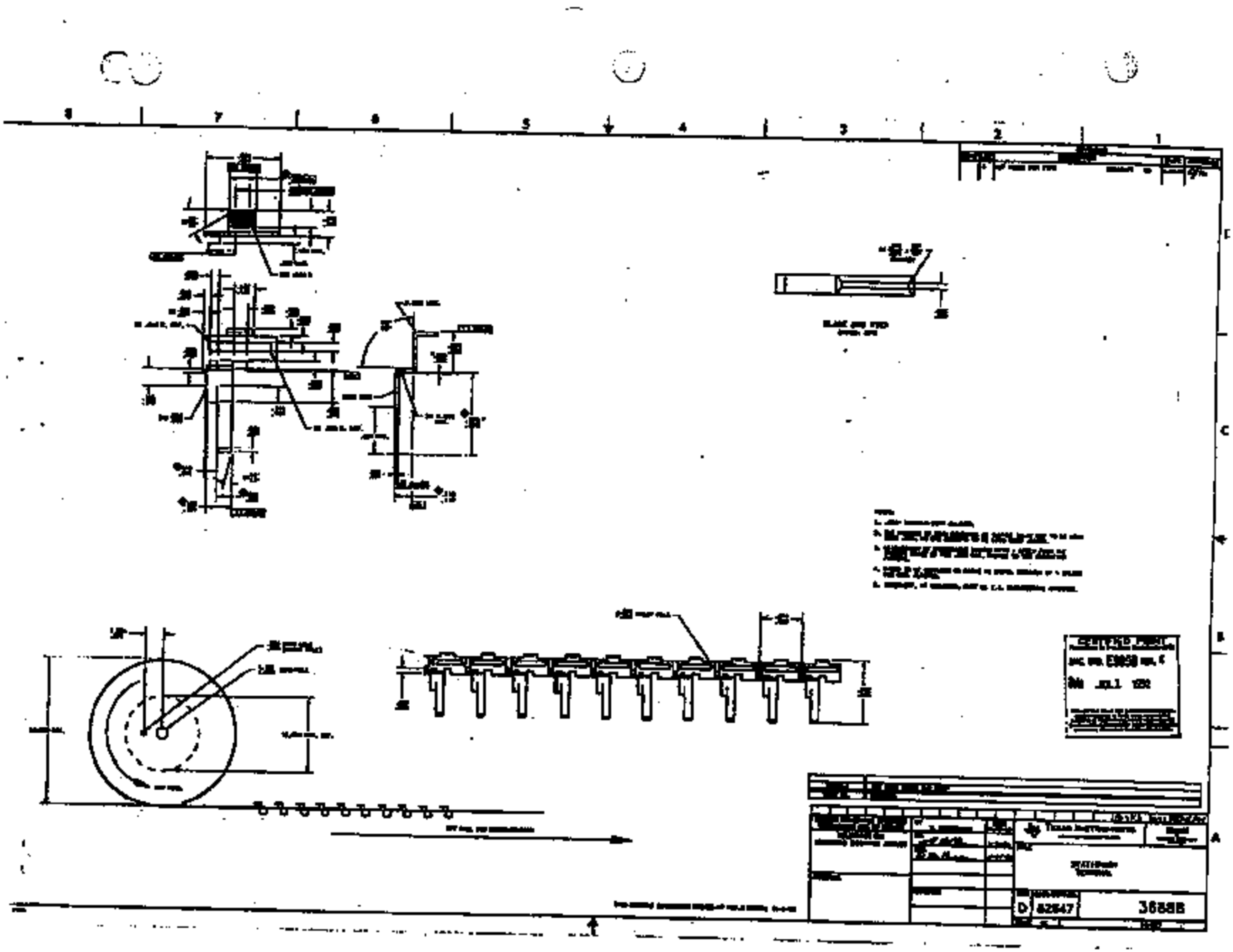
D 82847
36888

37430313

TEXAS INSTRUMENTS, INC.
BUILDING 11-16
34 FOREST STREET
ATTLEBORO, MA 02703

PARKER HANNIFIN CORPORATION
J.R.L. DIVISION
WEST CROFT CIRCLE
GREENVILLE, S.C. 29602
TELEPHONE (803) 373-1553

J.R.L. Division of Parker Seal certifies that the material used to produce the product in this shipment, namely [illegible]/37104. Conforms to TI drawing and TI purchase order requirements.

PART TITLE... GASKET

CUST P/N... 14353-1 LOT 2 DATE SHIPPED P/O... [illegible]

J.R.L. P/N... [illegible] 5-29-90 D/C... [illegible]

SILICONE COMPOUND... 37104 QUANTITY... 75,000

Very Truly Yours,
J.R.L. Division

Dennis T. [illegible]
Quality Control Manager

372/86

Ro 6/1/90

Bob
V3788
2pgs

TI-NHTSA 006539

TITLE GASKET

REV. H

74353

CERTIFIED PRINT
Parts Made To This Print Must Conform To
ENG. STD. E9898 REV. E
Date JUL 16 1992

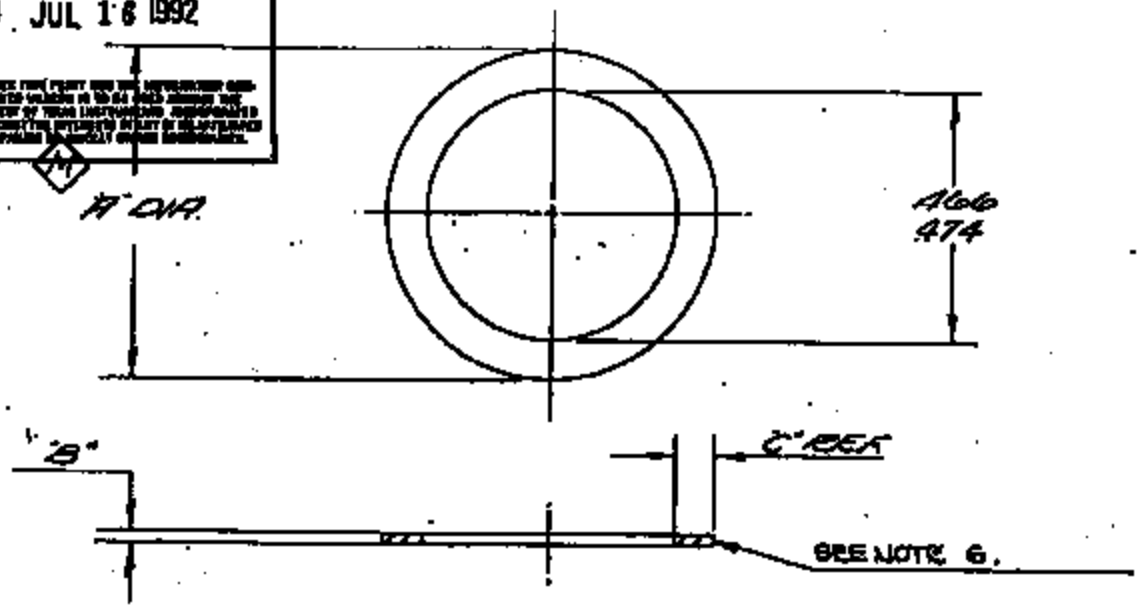

NOTES:

1. PARTS MUST BE PURCHASED FROM TI ENGINEERING APPROVED VENDORS, LISTED BELOW.
2. MATERIAL CERTIFICATION REQUIRED WITH EACH SHIPMENT.
3. MATERIAL TO BE COMPATIBLE WITH FREON-12 & REFRIGERANT OIL.
4. PARTS TO BE SHIPPED, ISSUED, AND STORED ON 4 FOOT +/- 6 INCH MANDRELS, SEALED IN PLASTIC BAGS AND SHIPPED IN CARDBOARD TUBES.
5. ALL CONTAINERS OF PARTS MUST BE MARKED TO REFLECT ANY MATERIAL LOT, TOOL OR PROCESS CHANGE.
6. DASH 1 (-1) AND DASH 4 (-4) GASKET MUST HAVE FOUR (4) WHITE STRIPING INK MARKS, EQUALLY SPACED AROUND THE CIRCUMFERENCE, AND NOT LESS THAN 1/8 INCH WIDE. NO INK IS ALLOWED ON ANY OTHER SURFACE.

PART NO.	MATERIAL	DUROMETER	COLOR	A	B	C
74353-4	ETYLENE PROPYLENE J&L COMPOUND E-7104-70 J&L PART NO. 61971E	70	BLACK	.670-.662	.030-.036	.063
74353-3	ETHYLENE PROPYLENE J&L COMPOUND E-7064	70	WHITE	.670-.662	.030-.036	.063
74353-2	ETHYLENE PROPYLENE J&L COMPOUND E-7064	70	WHITE	.599-.591	.030-.036	.063
74353-1	ETHYLENE PROPYLENE J&L COMPOUND E-7104-70 J&L PART NO. 61971E	70	BLACK	.599-.591	.030-.036	.063

DES. QD-1 QI-1 MU-1 P37-7 P35-1

J. Dail 3-18-86
3-20-86
3-19-86

TEXAS INSTRUMENTS INCORPORATED
ATTLEBORO, MASS., U.S.A.

KIDDON CONTROL PRODUCTS DIVISION

SIZE A

PARTS LIST 74353

TI-NHTSA 006540

VALENTINE TOOL & STAMPING, INC.

[illegible] EAST [illegible] ST., [illegible], MASS. [illegible]
([illegible]) [illegible]

MATERIAL CERTIFICATION

DATE : FRIDAY MAY 29, 1992

CUSTOMER : TEXAS INSTRUMENTS INC

CUSTOMER P.O. NO : 505111897 SUPPLIER INVOICE NO.: 81791

PART DESCRIPTION : 27713-1 CUP REV.B

SUPPLIER FJO NO. : 19053

QUANTITY SHIPPED : 63,800

SHIPMENT DATE : 05/29/92

WE CERTIFY THAT THE MATERIAL USED
TO PRODUCE THE PRODUCT IN THIS
SHIPMENT, NAMELY
[illegible] C 33b
CONFORMS TO T.I. DRAWINGS AND
T.I. PURCHASE ORDER REQUIREMENTS

SIGNED Jeanne LaFlamme
(Supplier Representative)

Jeanne LaFlamme Quality Assurance Manager

TI-NHTSA 006541

TELEX
FAX
PHONE
DIAL-A-

ROME STRIP STEEL COMPANY, INC.

530 HENRY ST. BOX 189
ROME, NEW YORK 13440

COMPLIANCE P1

SALES CODE
*059K016

0 1 0 0 0 0 0 0

DATE	INVOICE NO
04/01/92	15355

INVOICE TO: VALENTINE TOOL & STAMPING, INC.
171 W MAIN ST
NORTON, MA 02766

SHIP TO: VALENTINE TOOL & STAMPING, INC.
171 W MAIN ST
NORTON, MA

QUANTITY (LBS)	NO. CLS.	NO. SHTS OR BDLS	MATERIAL COMPLETE	SHIPPED BY	ST. NO.	C	SIZE	F	B	SI	HT	CR	NO
15,834	034	06	COMP	CAY NEX	R42735	04	28	008	013	01	01	03	01

AL VR CR CA

MEETS REQUIREMENTS OF:
CUST. ORDER NO. 13429

COLOR CODE

[redacted] 2MM X 50.00MM

		FILL NO	PREPAID COLLECT	STAMPING	PAPER WRAP	BDLS	CRATES	SKD
	TEMPER	7200f	PREPAID					
TOLERANCE .04000 X 2.0000	B 50 MAX	COILS OR CUT		SKIDS	SKID SIZE	PER. KT	WASTERS	CORES
	CODE	LENGTH/SEC	440 LBS	3000				
+.001 -.001 +.005 -.005	N03 SLIT	220 PIN 16 3b		BUNDLES	STACKERS	SKIDOUT	BOARDS	CAPS
					3/4"			
+.025 -.025MM +.127 -.127MM				BOXES	CARRIER	FLATTENER	OIL	7-PCS

CLASS	ALLOY NO.
ALUM KILD	C-1006

[redacted]

TEST REPORT

(7,182 KG) 15,834

Certificate of Compliance

ATTEST:
Notary Public, Oneida County
My commission expires 5/31/92

DATE 4/2/92

I certify that the above figures are a true and correct copy of those contained in the records of this corporation.

ROME STRIP STEEL CO., INC.

TI-NHTSA 006542

#3773

9738

CERTIFIED PRINT
Parts Made To This Print Will Conform To
ENG. STD. E9898 REV. E
Date JUL 16 1992

REVISIONS					
ZONE	LTR	STPS	DESCRIPTION PROJ. # 3483	DATE	APPROVED
	B		[illegible]	3-14-91	[illegible]

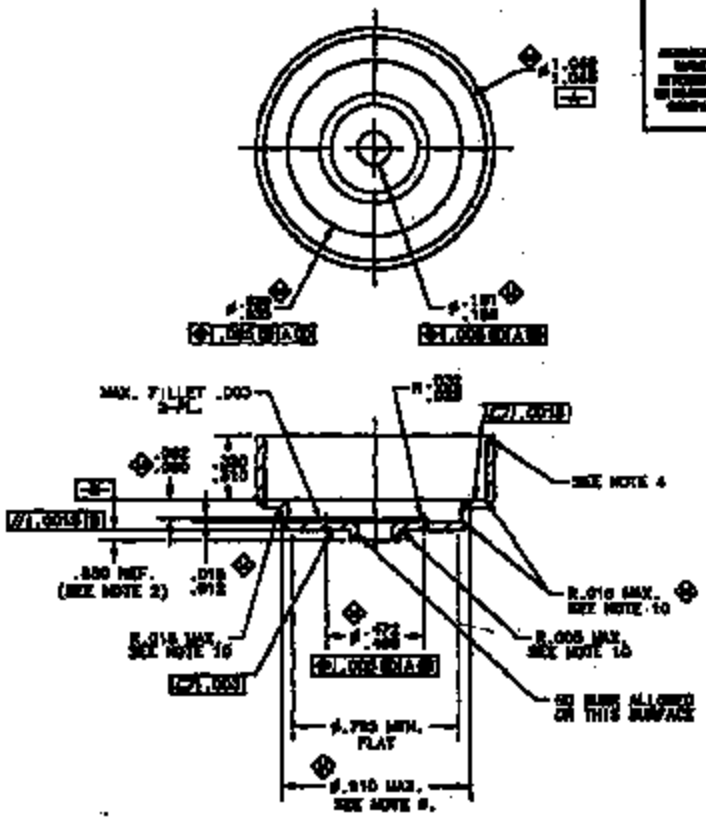

NOTES:
1. .002 MAX. BURR ALLOWED, EXCEPT WHERE INDICATED.
2. .136-.181 # MUST BE MAINTAINED THRU .038 MIN.
3. DIMENSIONS APPLY AFTER PLATING.
4. FINISH OFF RADIUS ALLOWED.
5. PARTS TO BE SHIPPED, ISSUED, AND STORED IN SEALED PLASTIC BAGS.
6. ALL CONTAINERS OF PARTS MUST BE DATE CODED. DATE CODE IS TO REFLECT ANY MATERIAL LOT, TOOL OR PROCESS CHANGE.
7. THIS PART IS LOT CONTROLLED. ANY PROCESS CHANGE; NEW SET-UP, PUNCH CHANGE, MAJOR TOOL WORK OR MATERIAL LOT CHANGE WILL SIGNIFY START OF A NEW LOT. EACH LOT WILL HAVE IT'S OWN BACKING SLIP WITH LOT IDENTIFICATION, PALLETIZED LOTS REQUIRE ONE BAND FOR EACH LOT.
8. MATERIAL CERTIFICATION REQUIRED WITH EACH SHIPMENT.
9. .038 - .041 THICKNESS DOES NOT APPLY IN THIS AREA DUE TO WALL THINNING DURING FORMING.
10. EFFECTIVE RADIUS, NO MATERIAL MAY PROTRUDE BEYOND THE THEORETICAL BOUNDARY ESTABLISHED BY THE GIVEN RADIUS.

PART NO	MATERIAL	THICKNESS	FINISH
27713-1	#1018 OR #1008 C.R.S.	.038-.041	ZINC PLATING W/YELLOW CHROMATE .0002-.0004 THICK

DRAWN BY CHRIS FLEMMIT	DATE 11-5-90	TEXAS INSTRUMENTS	TI CONTROL PRODUCTS
	3-27-91	TITLE CUP	
		CODE B	CODE IDENT NO. 82647 — 27713

THIS DWG. SUPERSEDES 27713 REV. "A" DATED 11-9-90

TI-NHTSA 006543

September 25, 1991

To: Donna Moynihan 12-27

From: Beth Kill 10-16

Subject: Material Confirmation
TSL Request # 110832

Sample Description:

P/N 74176-1 Seal Teflon and Kapton

Results:

DSC results confirm the presence of Teflon by the characteristic melt point at 316 - 319 degrees C.

Kapton is confirmed in the seal by the IR scan. It shows the same chacteristic absorbances exhibited by the sample known to be Kapton. See the enclosed scan.

Finally, the Teflon is confirmed to be on the surface of both sides of the seal by EDAX analysis.

Regards,

Beth X3069

Sample 78478-1 KAPTON TAPE
Size 3.3808 mg
Method KAPTON
Comment TGA 110698 10ZR DUAL

DSC

File: CKAPTON.00
Operator: K ROSS
Run Date: 06/23/01 08:18

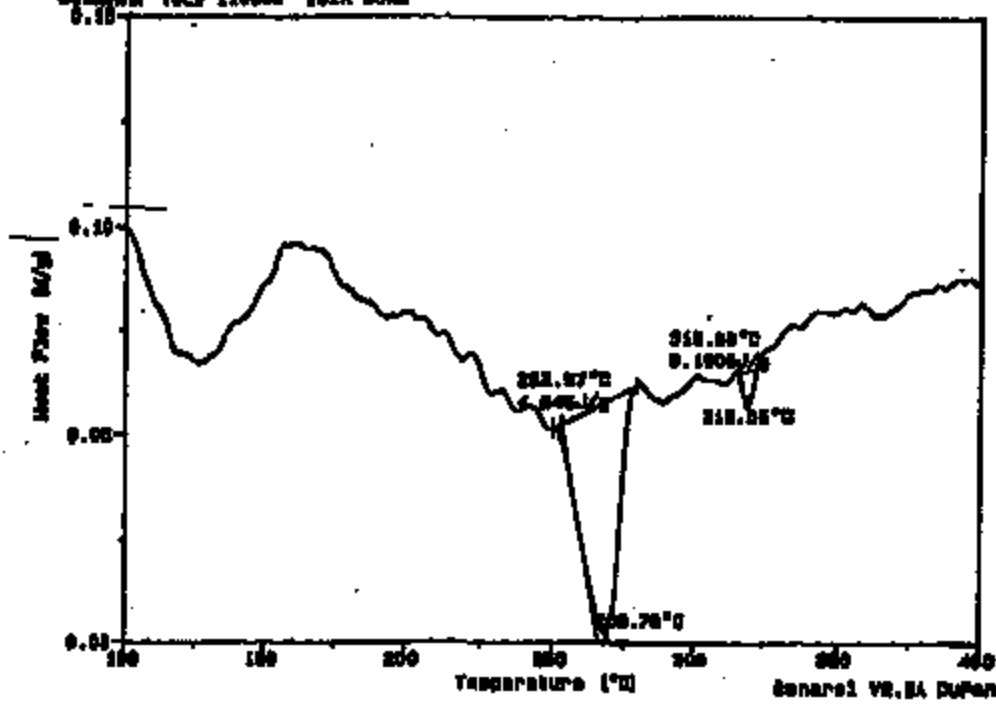

Sample 78478-2 KAPTON TAPE
Size 2.5000 mg
Method KAPTON
Comment TGA 110698 10ZR DUAL

DSC

File: CKAPTON.01
Operator: K ROSS
Run Date: 06/23/01 08:18

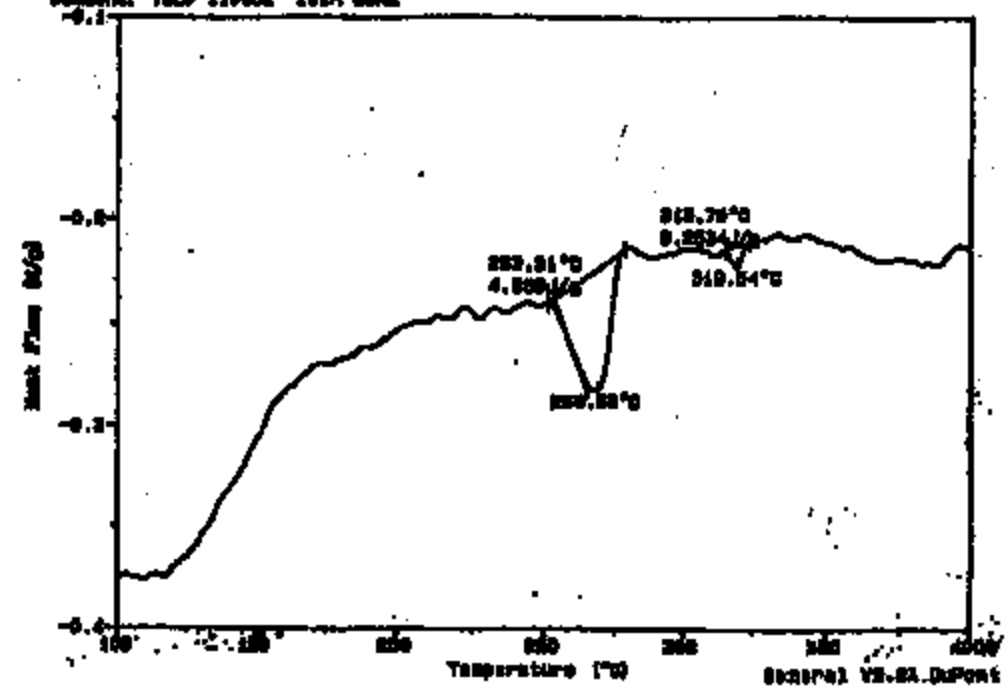

NO. 007-1493

PERKIN-ELMER

CONCENTRATION
THICKNESS
PHASE
REMARKS

SCAN MODE: ACCY. ☐ SURVEY ☐ HI ENERGY ☐ CAL. ☐ RESOLUTION ☑

OPERATOR EK DATE 9/23/91

SPECTRUM NO.
SAMPLE 110232 Kapton - Teflon
ORIGIN

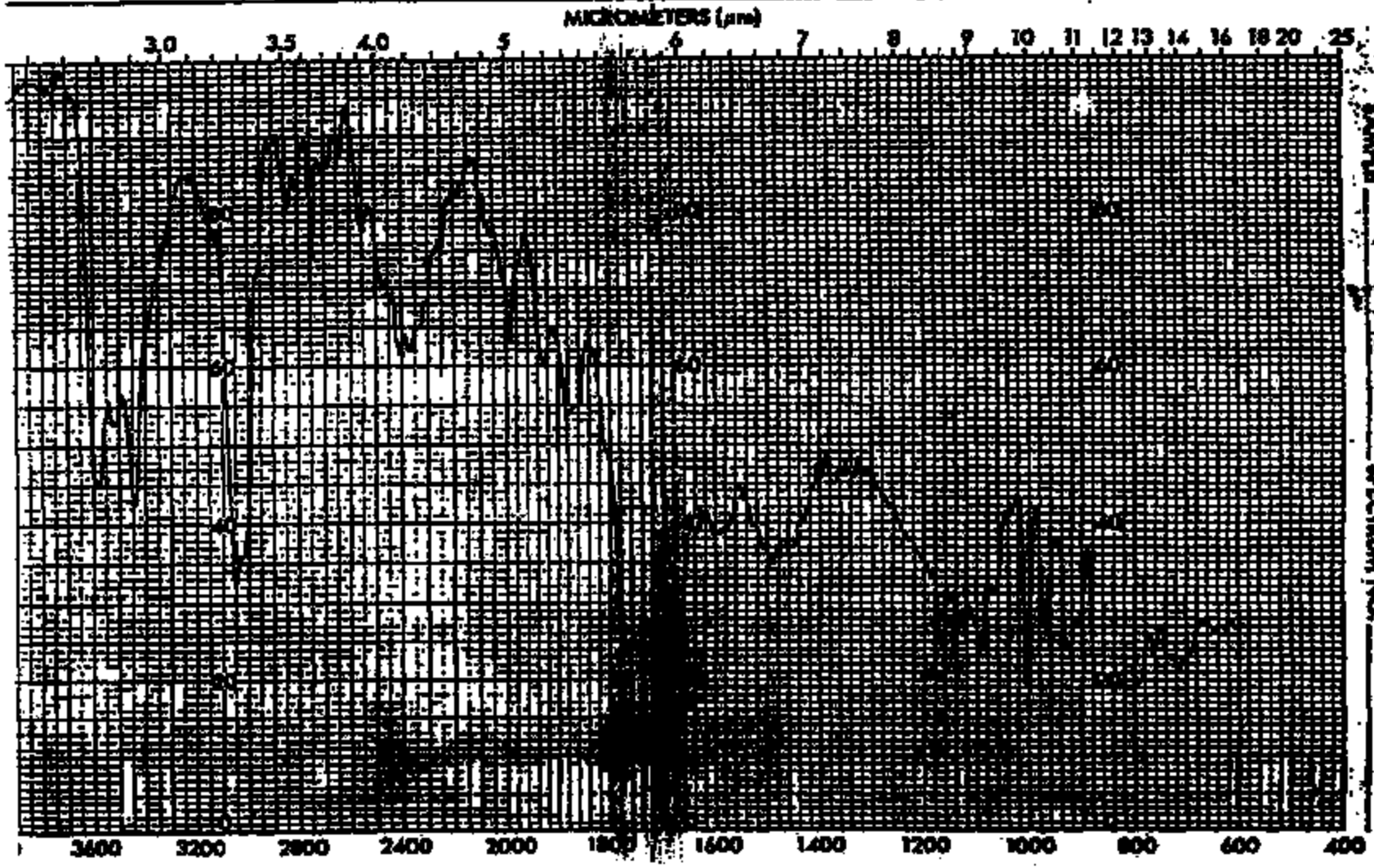

SPECTRUM NO.

NCENTRATION
CKNESS
ASE
MARKS

SCAN MODE ACCY. ☐ SURVEY ☐
HI ENERGY ☐ CAL. ☐
RESOLUTION ☑
OPERATOR JS DATE 3/6/82

SPECTRUM NO.
SAMPLE Dupont Kapton
100EN049
ORIGIN

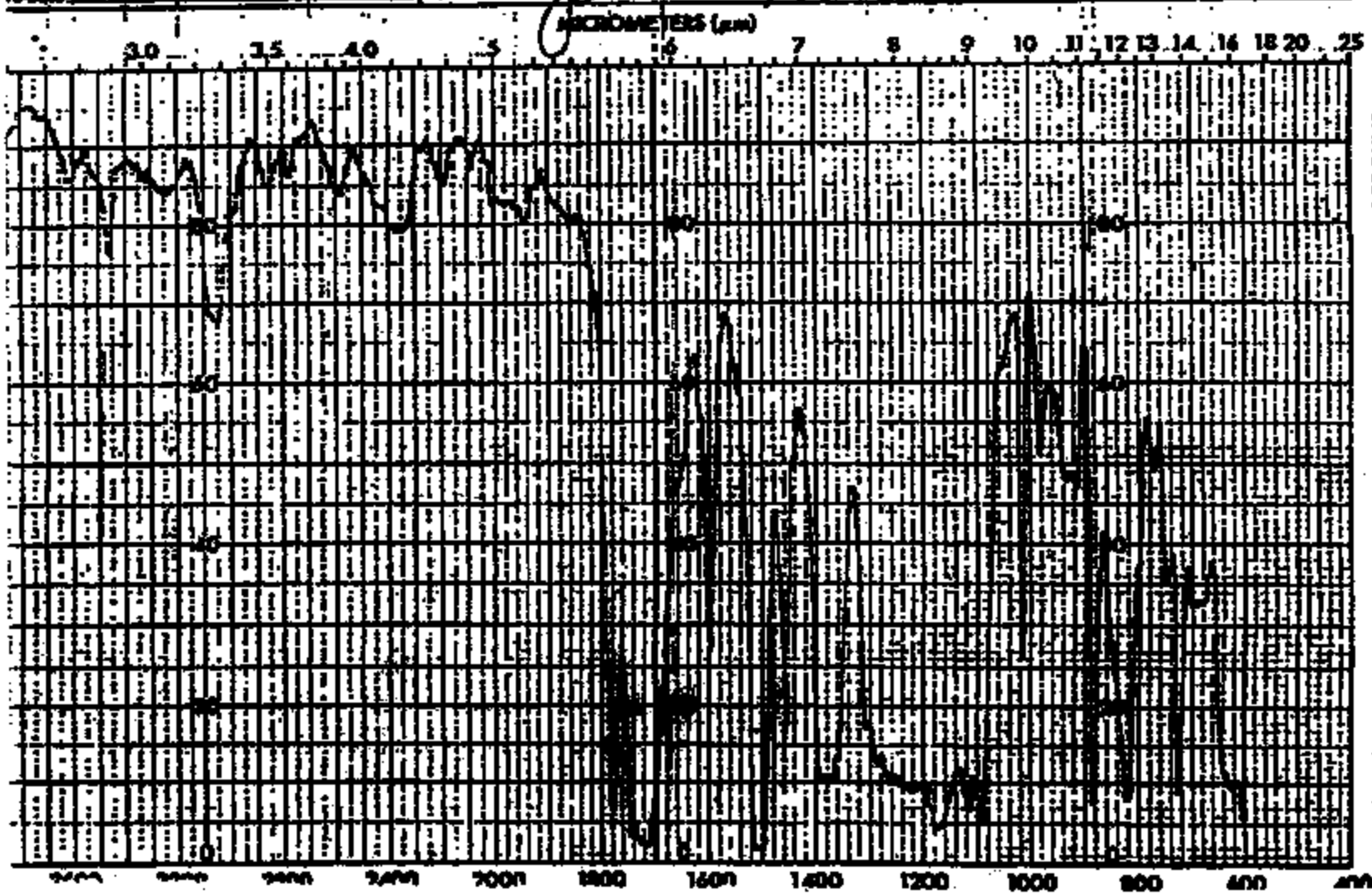

SAMPLE SPECTRUM NO.

74176

TITLE SEAL

REV. B 74176

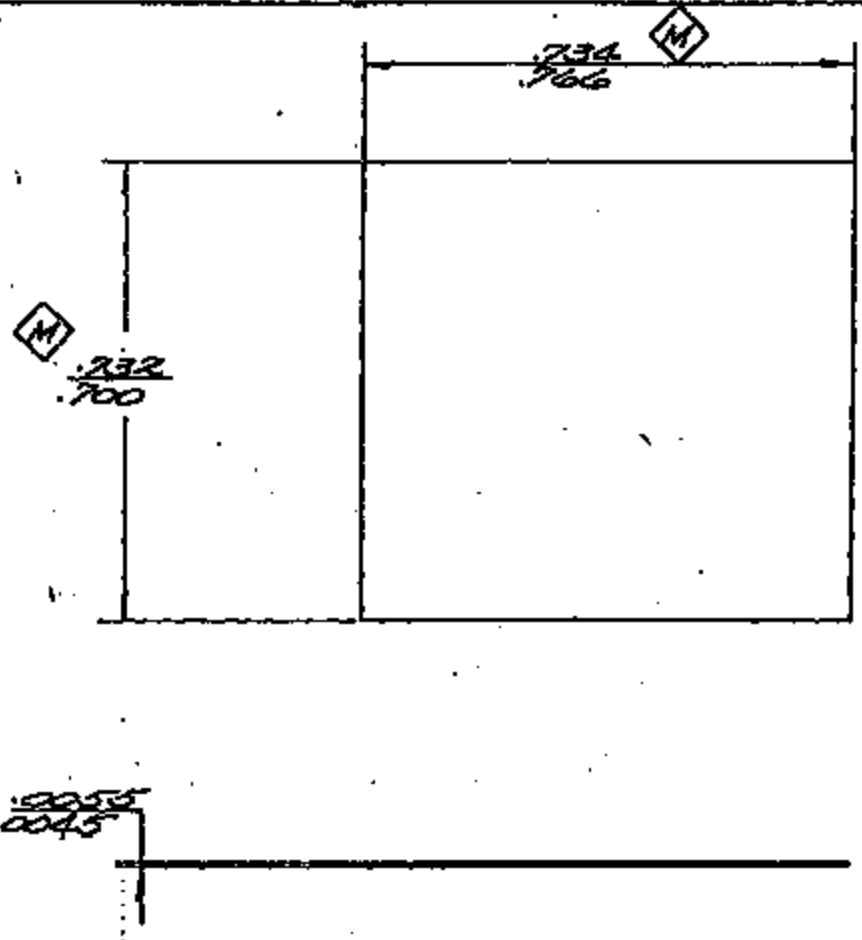

NOTE:
1. .001 MAX. BURR ALLOWED

CERTIFIED PRINT
Parts Made To This Print Meet Conditions Of
ENG. STD. E9898 REV. E
Date JUL 1 1991

D	74176-1	MADE FROM 27225-1 (STRIP)
	PART NO.	MATERIAL

REV															

BY 2-1-94
CK. 2-17-94
ENG. 2/17/94

TEXAS INSTRUMENTS
INCORPORATED
ATTLEBORO, MASS., U.S.A.

KLIXON
DIVISION

A

74176

REVISIONS				
ZONE	LTR	DESCRIPTION	DATE	APPROVED
	N	[illegible]	[illegible]	[illegible]

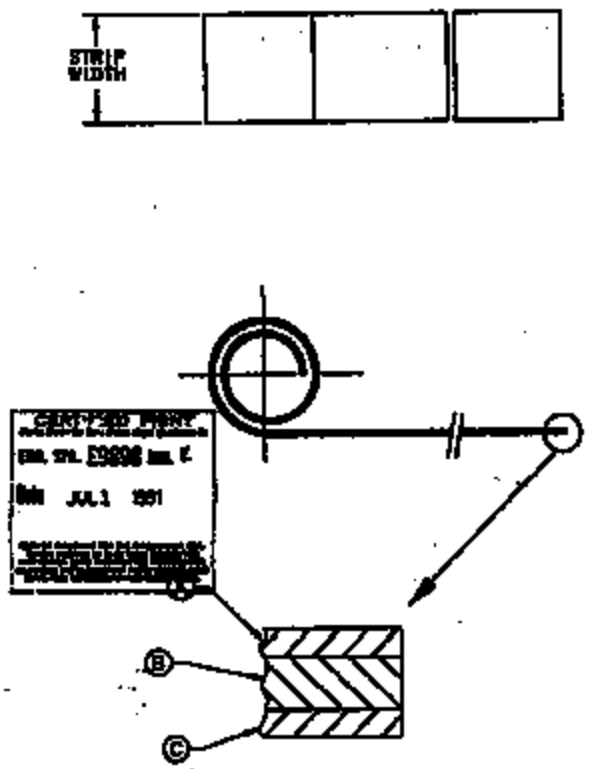

NOTES:

1. STRIP TO BE INSPECTED FOR TEFLON COATING, THICKNESS, DEFORMITIES, BUBBLES, AND LAMINATE SEPARATION.
2. EACH KAPTON STRIP ROLL MUST BE LABELED WITH T.I. PART NO. ON INSIDE OF CORE.
3. NO MORE THAN 2 SPLICES PER COIL PERMITTED. SPLICES TO BE CLEARLY MARKED WITH YELLOW MYLAR.
4. MATERIAL CERTIFICATION REQUIRED WITH EACH SHIPMENT.
5. ROLLS SLITTED FROM END OF MASTER COIL NOT ACCEPTABLE.
6. BUCKLING OF THE CORE ALLOWED UP TO 1/4" MEASURED RADIALLY AWAY FROM THE CORE.
7. DENT NIP OR JAGGED EDGES ON MATERIAL NOT ALLOWED.
8. ROLLS ARE TO BE SHIPPED WITH PROTECTIVE INSERT CORES IN THE PACKING BOX.

THIS DWG. SUPERSEDES 27225 REV. "M" DATED 12-13-89

PART NO.	MATERIAL	THICKNESS (MILS)	TEFLON (A)	KAPTON (B)	TEFLON (C)	STRIP WIDTH (IN.)	PKG PER LIP (I.D.) (O.D.) (IN.)	CORE MATERIAL
[illegible]	[illegible]	3 x .4 MILS	0.5	3	0.5	.985-.994	3 x 9 1/2	PLASTIC (WHITE)
[illegible]	[illegible]	5 x .5 MILS	1	3	1	.985-.994	6 x 9 1/2	CARDBOARD
[illegible]	[illegible]	5 x .5 MILS	1	3	1	.734-.739	6 x 9 1/2	CARDBOARD

CONSTRUCTION (MILS) (SEE NOTE 2)

TEXAS INSTRUMENTS			
TITLE: KAPTON STRIP SPECIFICATION			
SIZE B	82647	27225	

TI-NHTSA 000549

DIEMASTERS MANUFACTURING, INC.

CERTIFICATE OF CONFORMANCE

DATE: 07-10-92

CUSTOMER: TEXAS INSTRUMENTS

PURCHASE ORDER NUMBER: 500015400

PART NUMBER: 27639-1 REV/ECO NUMBER: D

PART DESCRIPTION: WASHER

QUANTITY THIS SHIPMENT: 12,367

SHIPMENT DATE: 07-10-92

TRACEABLE LOT NUMBER: II. 163

* * * * * * * * * *

WE CERTIFY THAT ALL ITEMS SHIPPED ON THIS ORDER MEET THE REQUIREMENTS OF THE TI PURCHASE ORDER AND TI DRAWINGS/SPECIFICATIONS. RESULTS OF REQUIRED MECHANICAL, VISUAL, FUNCTIONAL, AND CHEMICAL TESTS ARE ON FILE IN OUR QUALITY CONTROL DEPARTMENT.

* * * * * * * * * *

SIGNED: [illegible]
QUALITY ASSURANCE REPRESENTATIVE

TITLE: Q/A INSPECTOR

DIEMASTERS MANUFACTURING, INC.

CERTIFICATE OF MATERIAL ANALYSIS

DATE: 07-10-92

CUSTOMER: TEXAS INSTRUMENTS

SUPPLIER PURCHASE ORDER: 033652

CUSTOMER PURCHASE ORDER: 500015400

PART NUMBER: 27639-1 REV/ECO: D

PART DESCRIPTION: WASHER

QUANTITY THIS SHIPMENT: 12,367 SHIPMENT DATE: 07-10-92

TRACEABLE LOT NUMBER: TI- 163

HEAT NUMBER: 664332

TYPE OF MATERIAL: CRS 1050

* * * * * * * * * *

WE CERTIFY THAT THE MATERIAL USED TO PRODUCE THE PRODUCT IN THIS SHIPMENT CONFORMS TO THE TI PURCHASE ORDER AND TI DRAWING/SPECIFICATION REQUIREMENTS. RESULTS VERSUS SPECIFICATION ARE AS NOTED BELOW.

* * * * * * * * * *

ELEMENTAL CONSTITUENTS	SPECIFIED RANGE	ACTUAL RANGE
1. C	0.47–0.55	.51
2. Mn	0.60–0.90	.69
3. P MAX.	0.040	.013
4. S MAX.	0.050	.002
5.		

ROCKWELL HARDNESS: B/76 DPH:

TS. K.S.I.:

SIGNED: Phil Fryer
QUALITY ASSURANCE REPRESENTATIVE

TITLE: Q/A Inspector

DIEMASTERS MANUFACTURING, INC.

MATERIAL CERTIFICATION

DATE: 07-10-92

CUSTOMER: TEXAS INSTRUMENTS

SUPPLIER PURCHASE ORDER: 033652

CUSTOMER PURCHASE ORDER: 500015400

PART NUMBER: 27639-1 REV/ECO: D

PART DESCRIPTION: WASHER

QUANTITY THIS SHIPMENT: 12,367

SHIPMENT DATE: 07-10-92

TRACEABLE LOT NUMBER: TI - 163

HEAT NUMBER: 664332

TYPE OF MATERIAL: CRS 1050

****

WE CERTIFY THAT THE MATERIAL USED TO PRODUCE THE PRODUCT IN THIS SHIPMENT, NAMELY (SPECIFIC NAME/NUMBER OF MATERIAL), CONFORMS TO TI DRAWING AND TI PURCHASE ORDER REQUIREMENTS.

****

SIGNED: Phil Nguyen
QUALITY ASSURANCE REPRESENTATIVE

TITLE: Q/A INSPECTOR

CERTIFICATE

RIVERDALE PLATING & HEAT TREATING, INC.

680 West 134th Street Riverdale, Illinois [illegible]

DIEMASTERS MANUFACTURING, INC.
767 INDUSTRIAL DR
ELMHURST IL [illegible]

27639-1 WASHER TI-LOT 163

THIS IS TO CERTIFY THAT THE PARTS, FURNISHED AGAINST THE LISTED PURCHASE ORDER, WERE PROCESSED IN ACCORDANCE TO SPECIFICATION.

PO ORDER NO.	CUSTOMER NO.	[illegible]	[illegible]	[illegible]	[illegible]
155347	110792	ABSTRESS TO W/C 97-95	12,369	269	6/29/92
155347	110792	[illegible] - .0006	12,369	269	6/29/92

Subscribed and sworn to before me

THIS 29 DAY OF JUNE, 19[illegible]

Notary Public

OFFICIAL SEAL

RIVERDALE PLATING & HEAT TREATING, INC.
QUALITY CONTROL

Vice President

1 1992

#27639

TI-NHTSA 006553

#27639

R

TOLLMAY STEEL CORPORATION
25th Ave. & Main St.
Melrose Park, IL 60160
Phone (708) 681-9190

Customer DIEMASTERS MFG.

ANALYSIS REPORT

ITEM #	ORDER #	PART #	SIZE	GRADE	TEMPER
1.	033652	CROSSAD 1375C	.0985 x 1.375 x cl	C1050	AKNLD
2.			QUALITY CONTROL		
3.			APR 30 1992		

ITEM #	ID#	C	Mn	P	S	Si	Ni	Cr	Al
1.	664332	.51	.69	.013	.002	.27			
2.									
3.									

ITEM #	ROCKWELL	TENSILE	YIELD	ELONGATION	OTHER
1.	RB 78				
2.					
3.					

CERTIFIED BY: Thomas E Bulman
THOMAS BULMAN

TEXAS INSTR
27639-1

6/16

TI-NHTSA 006554

ZONE	LTR	DESCRIPTION	DATE	APPROVED
	B	SEE NOTE 4 WAS SEE NOTE 3 SEE NOTE 6 WAS SEE NOTE 5 SEE NOTE 10 WAS SEE NOTE 11 SEE NOTE 11 WAS SEE NOTE 12 CH 18968	9-6-90	A.V.

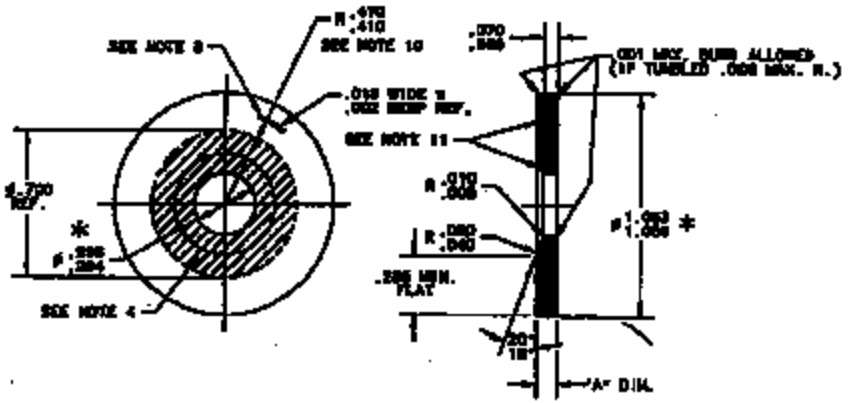

NOTES:

1. PART MUST BE FLAT TO WITHIN .006 T.I.R..
2. DIAMETERS MARKED WITH ✱ MUST BE CONCENTRIC TO WITHIN .004 T.I.R..
3. PARTS TO BE SHIPPED, ISSUED, AND STORED WITH APPLIED RUST PREVENTIVE BEFORE PLATING. AFTER PLATING, PARTS TO BE SHIPPED, ISSUED, AND STORED IN SEALED PLASTIC BAGS.
4. NO TOOL MARKS ALLOWED IN THE BORED AREA ON BEVELED SIDE OF WASHER.
5. THE PARTS HARDNESS IS MEASURED AFTER A .003-.010 THICK SKIN IS REMOVED.
6. THIS PART IS LOT CONTROLLED. ANY FEED CHANGE, NEW SETUP, FINISH CHANGE, MAJOR TOOL WORK OR MATERIAL LOT CHANGE WILL SIGNIFY START OF A NEW LOT. NO MINIMUM LOT SIZE. EACH NEW LOT WILL HAVE A LOT NUMBER. EACH LOT WILL HAVE ITS OWN PACKING SLIP WITH LOT IDENTIFICATION.
7. MATERIAL CERTIFICATION REQUIRED WITH EACH SHIPMENT.
8. STAMP IDENTIFICATION CODE AS REQUIRED TO IDENTIFY SUPPLIER TOOL. CODE SHALL BE CLEARLY VISIBLE AFTER PLATING. NO BURR OR SHARP EDGES PERMITTED.(-6 ONLY)
9. DIM. "A" TO BE MEASURED WITH STANDARD WASHER GAUGE.
10. IDENTIFICATION MARKS ALLOWED BETWEEN .410-.470R..
11. THESE SURFACES MUST BE SMOOTH AND FREE OF ANY PLATING ASPERITIES OR INCLUSIONS. (I.e. NO FROSTED EFFECTS OR PARTICULATE CONTAMINATION OF THE PLATING.)

THIS DWG. SUPERSEDES 27639 REV. "D" DATED 3-30-86

CERTIFIED PRINT
Parts Made To This Point Must Conform To
ENG. STD. E9898 REV. E
Date JUL 16 1992

PART NO	MATERIAL	FINISH	HEAT TREAT	"A" DIM.
27639-1	1034 DRS	ZINC PLATE .0002 - .0006 THK	HEATTREAT TO ROCKWELL 040-50	.087 - .101

DRAWN BY	BD JONES	DATE	10-30-89
CHK.			
APPR.	Stan Howell		06-11-90
MANAGER			

TEXAS INSTRUMENTS

TITLE: WASHER

SIZE	DWG NO.	
B	82647	27639

SCALE | SHEET

TI-NHTSA 000655

K. F. BASSLER COMPANY, INC.
PRECISION TOOLING & METAL STAMPINGS
45 John William St. • Attleboro, MA 02703 • (508) 222-1061 • Fax: (508) 226-1806
EST. 1946

MATERIAL CERTIFICATION

CUSTOMER: TEXAS INSTRUMENTS, INC -- ATTLEBORO

CUSTOMER ORDER NO.: 80511 8095

CUSTOMER PART NO.: 274061

REVISION: F

QUANTITY THIS SHIPMENT: 10,500

LOT NO. THIS SHIPMENT: 166

SHIPMENT DATE: 7-1-92

WE CERTIFY THAT THE MATERIAL USED TO PRODUCE THE PRODUCT IN THIS SHIPMENT, NAMELY, AK 1000 CLS, CONFORMS TO T23 DRAWING AND PURCHASE ORDER REQUIREMENTS.

AUTHORIZED SIGNATURE: Kathleen A. Penkala
Kathleen A. Penkala
Inside Sales Specialist

PMA PRECISION METALFORMING ASSOCIATION

TELEX 961214
FAX 315-336-0310
PHONE 315-336-9600
DIAL-8 233-3130

ROME STRIP STEEL COMPANY, INC.
530 HENRY ST. BOX 189
ROME, NEW YORK 13440

COMPLIANCE #1

SALES CODE
08072016

0 1 0 0 0 0 0 0

DATE	INVOICE NO
03/02/92	14240

INVOICE TO: K. F. BASSLER CO., INC.
45 JOHN WILLIAM ST.
ATTLEBORO, MA 02703

SHIP TO: K. F. BASSLER CO., INC.
45 JOHN WILLIAM ST.
ATTLEBORO, MA

QUANTITY (LBS)	PO CLS.	NO. TIMES OR SOLD	PARTIAL SHIPMENT	SHIPPED BY	RL. NO.	C	KR	P	S	W	HI	CR. NO
11,366	072	08	PART	R S S	F40019	05	29	011	012	01	01	03

AL WI CO CL

MEETS REQUIREMENTS OF:
PART NUMBER 14474

COLOR CODE

[redacted].7MM X 25.40MM		HEAT NO. 66012	PREPAID COLLECT PREPAID	STRAPPING	PAPER WRAP	SOLE	CRATES	BOX
.04600 X 1.0000	WIDTH 9 50 MAX	COIL OR CUT COIL	200 LBS	SKID 1600	SKID SIZE	FRG. WT 21 HI MAX	WASTERS	CORES
TOLERANCE +00050-00050+005 -005	EDGE NO3 SLIT	LENGTH/SPEC 200 PIN 16 34		SPINDLES	SPACERS	SHROUD	BOARDS	CAPS
+013 -013MM +127 -127MM				SKIDS	CARDS 500/096'	FLATTENING	OIL	T-PCS

CLASS ALUM KOLCTE | SUB NO. C-1008

[redacted]

(5,156 KG) 11,366

TEST REPORT

Certificate of Compliance

ATTEST:
052 06280 33-030792
Notary Public, Oneida County
My commission expires

DATE

I certify that the above figures are a true and correct copy of those contained in the records of this corporation.

ROME STRIP STEEL CO., INC.

#27406

TI-NHTSA 008557

TELEX 901214
FAX 315-339-3010
PHONE 315-339-3000
DUNS 929-3130

ROME STRIP STEEL COMPANY, INC.

530 HENRY ST. BOX 189
ROME, NEW YORK 13440

COMPLIANCE #1

DATE	INVOICE NO.
03/04/92	14343

SALES CODE 08072016

0 1 0 0 0 0 0 0

INVOICE TO: K. F. BASSLER CO., INC.
45 JOHN WILLIAM ST
ATTLEBORO, MA 02703

SHIP TO: K. F. BASSLER CO., INC.
45 JOHN WILLIAM ST
ATTLEBORO, MA

QUANTITY (LBS)	SEL. CLS.	NO. SKIDS OR BALE	INITIAL CONTACT	SHIPPED BY	ST. NO.							
9,562	060	07	CUMP	CAN NEX	F40019	05	29	011	012	01	01	03

ORDER REQUIREMENTS OF:
CUST. ORDER NO. 14474

COLOR CODE

[redacted]L7MM X 25.40MM

HEAT NO.	PREPAID COLLECT	STRAPPING	PAPER WRAP	BELTS	CRATES	BOX
66012	PREPAID					

.04600 X 1.0000

TEMPER	COILS OR CUT		SHEETS	SKID SIZE	PKG. WT	WAITERS	CORES
* 50 MAX	COIL	200 LBS	1600		21 HI MAX		

TOLERANCE +00050-00050+005 -005

EDGE	LENGTH SPEC					
NO3 SLIT	200 PIW 16 34					

	SPACERS	SHROUD	BOARDS	CAPS
	CARBON	FLATNESS	OIL	T-PCS
	500/096'			

+013 -013MM +127 -127MM

CUSTOMER ALLOY [redacted]

[redacted]

(4,337+KG) 9,562

TEST REPORT

Certificate of Compliance

ATTEST: 092 16200 33 090792
Notary Public, Oneida County
My commission expires 3/31/92

DATE 3/5/92

I certify that the above figures are a true and correct copy of those contained in the records of this corporation.

ROME STRIP STEEL CO., INC.

#27406

TI-NHTSA 006558

CERTIFICATE

ENG. STD. E9898 REV. E

Date JUL 16 1992

ZONE	LTR	DESCRIPTION	DATE	APPROVED
	A	[illegible]	[illegible]	[illegible]
	B	[illegible]	[illegible]	[illegible]
	C	ADDED NOTE 4	[illegible]	[illegible]
	D	[illegible]	[illegible]	[illegible]
	E	[illegible]	[illegible]	[illegible]
	F	[illegible]	[illegible]	[illegible]

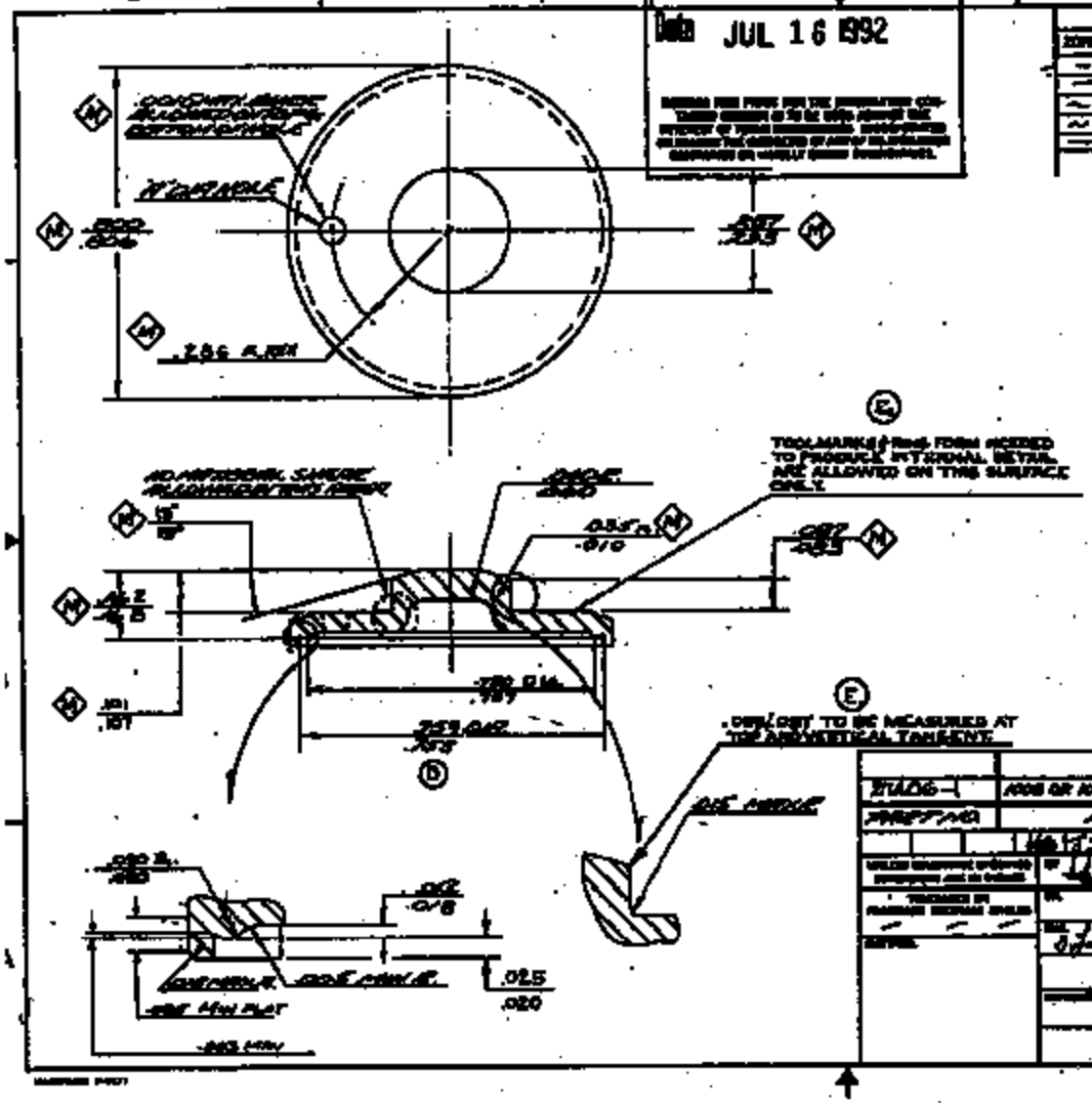

NOTE:
1. DIMENSIONS MUST BE CONCENTRIC TO CONFORMANCE TO MAXIMUM .008 TIR.
2. PARTS TO BE SHIPPED COATED AND OPENED IN SEALED PLASTIC BAGS AFTER PLATING.
3. DUPLICATE DIMENSIONS THRU REV. E SEE DWG. SHEET.
4. THIS PART IS LOT CONTROLLED. ANY CHANGE TO THE FORMING RING FUNCTION OR DIE WILL MODIFY THE SIZE OF A NEW LOT. A MINIMUM LOT SIZE OF 4000 PIECES WILL BE THE ONLY EXCEPTION. ANY LOT SIZES UNDER 4000 PIECES WILL BE MARKED AND RECORDED ALONG WITH THE DATE ON EACH BAG. EACH LOT WILL HAVE ITS OWN PACKING SLIP WITH LOT IDENTIFICATION.
5. STAINS ON PRODUCT DUE TO RUST-INHIBITOR ARE ACCEPTABLE. PARTS MUST BE ABLE TO BE PLATED PER TI'S CURRENT PROCESS.

STOCK	4008 OR 1010 C.R. STEEL	.062 THK	Zn NC PLATING .0002-.0004 THK
FINISH NO	ANTIBRIGHT	TI CODE	PLATING

TEXAS INSTRUMENTS
ATTLEBORO, MASSACHUSETTS, U.S.A.

TITLE: CONNECTOR

SIZE B | CAGE CODE NO. 82647 | 27406

SCALE 4/1 | SHEET 1 OF 1

TI-NHTBA 0006569

7.1

Insulfab PLASTICS, INC.

PLASTIC FABRICATORS DIVISION
158 NO. MAIN STREET, FRANKLIN, N.H. 03235
603-934-2770

CERTIFICATE OF CONFORMANCE

TO: TEXAS INSTRUMENTS DATE: JUN 30 1992

ATT: QUALITY CONTROL SUP.

THIS CERTIFIES THAT:

SHIPMENT # 164098

PART # 73958-1 REVISION C

QUANTITY 300,000

MAT'L DESC KAPTON HN

IS IN CONFORMANCE WITH THE REQUIREMENTS, SPECIFICATIONS, AND DRAWINGS ON YOUR ORDER # 505109857-4

BY: INSULFAB PLASTICS
FRANKLIN, NH 03235

Fred Vuyny
QUALITY CONTROL MANAGER

TITLE	REV.	
SPACER	C	73958

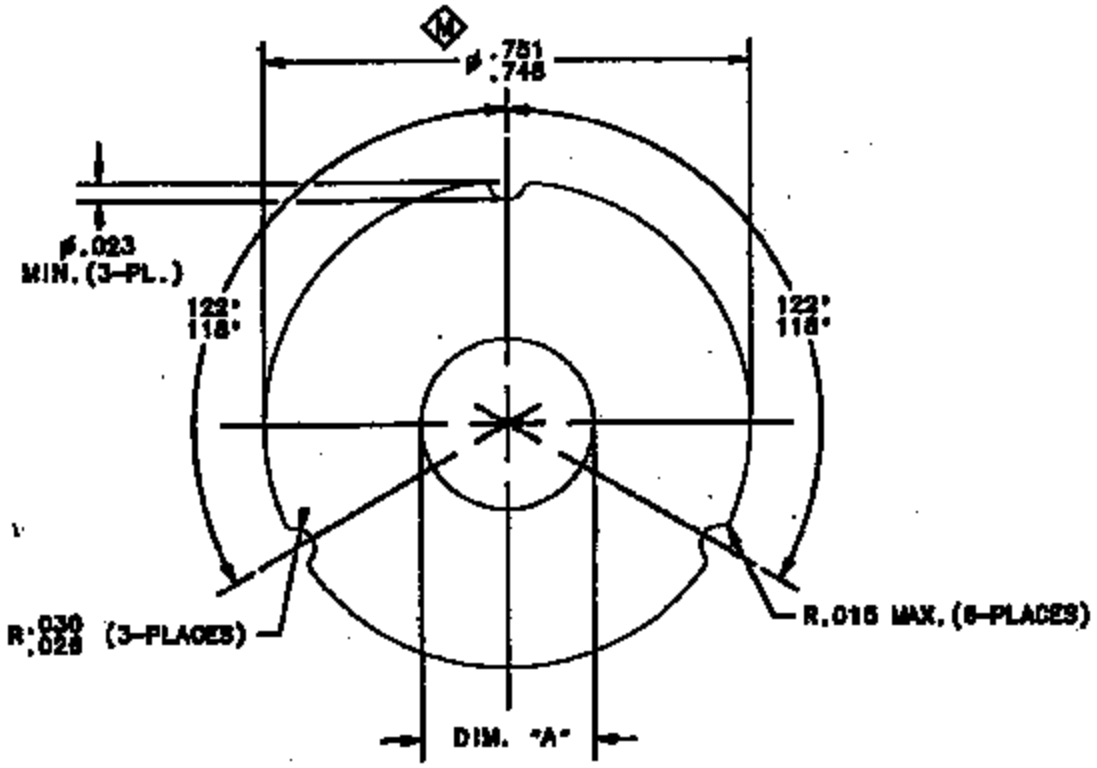

NOTES:

1. .001 MAX. BURR ALLOWABLE.
2. PARTS TO BE SHIPPED, ISSUED, AND STORED IN SEALED PLASTIC BAGS.
3. ALL CONTAINERS OF PARTS MUST BE DATE CODED, DATE CODE IS TO REFLECT ANY MATERIAL LOT, TOOL OR PROCESS CHANGE.
3. MATERIAL CERTIFICATION REQUIRED WITH EACH LOT.

CERTIFIED PRINT
Parts Made To This Print Must Conform To
ENG. STD. E9898 REV. E
Date JUL 16 1992

PART NO.	MATERIAL	DIM "A"
73958-3	MADE FROM .74224-1 (KAPTON TAPE)	NO HOLE
73958-2	DUPONTS, KAPTON 200H. .0017 - .0023 THICK	.260/.270
73958-1	KAPTON .0017 - .0023 THICK	

THIS DWG. SUPERSEDES 73958 REV. "F" DATED 10-14-88

BY TON DAIL 10-10-89
CHK.
ENG. Hans Hempel 10/16/89

TEXAS INSTRUMENTS
ATTLEBORO, MASSACHUSETTS 02703

KLIXON
CONTROL PRODUCTS DIVISION

SIZE A

PART NO. 73958

TI-NHTSA 006561

E. I. DU PONT DE NEMOURS & COMPANY
CIRCLEVILLE, OHIO 43113

NO: KC-13
Effective Date: 4/3/91
Expiration Date: 4/3/92
Page 1 of 1

MATERIAL CERTIFICATION

DATE: 6-30-92

CUSTOMER: TEXAS INSTRUMENTS, ATTLEBORO

CUSTOMER ORDER NO. 5000 11913

CUSTOMER PART NO. & REV. 74224-1 (REV. F)

QUANTITY THIS SHIPMENT 31.90

SHIPMENT DATE 6-30-92

We certify that the material used to produce the product in this shipment, namely 200HN Kapton*, 15/16" wide, conforms to TI drawing and TI purchase order requirements on file with the HPF Group of the Dupont Company.

SUPPLIER REPRESENTATIVE
ENGINEER - QUALITY CONTROL - TITLE

:dkh/smart no. 389

Better Things for Better Living

TI-NHTSA 006562

TITLE	REV.	
KAPTON TAPE	F	74224

NOTES:

1. ROLLS SLITTED FROM ENDS OF MASTER COIL NOT ACCEPTABLE.
2. BUCKLING OF THE CORE ALLOWED UP TO 1/4" MEASURED RADIALLY AWAY FROM THE CORE.
3. DENTS, RIPS, OR JAGGED EDGES ON MATERIAL NOT ALLOWED.
4. ROLLS ARE TO BE SHIPPED WITH PROTECTIVE INSERT CORES IN THE PACKING BOX.

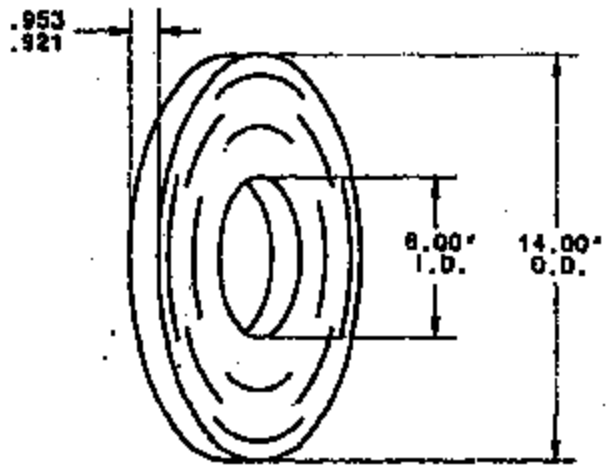

CERTIFIED PRINT
Parts Made To This Print Must Conform To
ENG. STD. E9898 REV. E
Date JUL 16 1992

PART NUMBER	MATERIAL	THICKNESS	
74224-1	DUPONTS, KAPTON 200H	.0017/.0023	

THIS DWG. SUPERSEDES 74224 REV. "E" DATED 10-14-88

BY TOM DAILY 10-14-88
CH.
ENG. 10-16-90

TEXAS INSTRUMENTS
ATTLEBORO, MASSACHUSETTS 02703

ELDXON
DIVISION

DWG. SIZE A

DWG. NO. 74224

TI-NHTSA 006583

Att #10

VALENTINE TOOL & STAMPING, INC.

171 WEST MAIN ST. NORTON, MASS. 02766
(508) 285-6911 226-0346

CERTIFICATE OF CONFORMANCE

DATE : MONDAY JULY 6, 1992

CUSTOMER : TEXAS INSTRUMENTS INC

CUSTOMER P.O. NO : 505095438 SUPPLIER INVOICE NO.: 82088

PART DESCRIPTION : 74797-1 CRIMP RING REV.B

SUPPLIER FJO NO. : 18829

QUANTITY SHIPPED : 60,800

SHIPMENT DATE : 07/07/92

WE CERTIFY THAT ALL ITEMS SHIPPED ON THIS ORDER MEET THE REQUIREMENTS OF THE PURCHASE ORDER AND APPLICABLE DRAWINGS/SPECIFICATIONS. RESULTS OF REQUIRED MECHANICAL, VISUAL, FUNCTIONAL AND CHEMICAL TESTS ARE ON FILE IN OUR QUALITY ASSURANCE DEPARTMENT.

SIGNED Jeanne LaFlamme
Jeanne LaFlamme
Quality Assurance Manager

VALENTINE TOOL & STAMPING, INC.

111 WEST MAIN ST. NORTON, MASS. 02766
(508) 285-5811

MATERIAL CERTIFICATION

DATE : MONDAY JULY 6, 1992

CUSTOMER : TEXAS INSTRUMENTS INC

CUSTOMER P.O. NO : 506095438 SUPPLIER INVOICE NO.: 82066

PART DESCRIPTION : 74797-1 CRIMP RING REV.B

SUPPLIER PJO NO. : 18829

QUANTITY SHIPPED : 60,800

SHIPMENT DATE : 07/07/92

WE CERTIFY THAT THE MATERIAL USED
TO PRODUCE THE PRODUCT IN THIS
SHIPMENT, NAMELY
(5052 AL)
CONFORMS TO T.I. DRAWINGS AND
T.I. PURCHASE ORDER REQUIREMENTS.

SIGNED Jeanne LaFlamme
(Supplier Representative)

Jeanne Laflamme Quality Assurance Manager

UNITED ALUMINUM CORPORATION

100 UNITED DRIVE • P.O. BOX 215 • NORTH HAVEN, CONNECTICUT 06473

CUSTOM ROLLED™ ALUMINUM SHEET

#74797

9831

SOLD TO: VA003
ATTN: DICK WHITNEY

VALENTINE TOOL & STAMPING INC.
171 WEST MAIN STREET
NORTON, MA 02766-0469

DATE March 27, 1992
CUST. PO# 14726
ORDER SPECS 5052-O .03200 x 2.312
UA ORDER# 166712D
SPECIFICATIONS ASTM B209,QQ-A-250/8

CHEMICAL COMPOSITION LIMITS

This is to certify the following chemical composition limits, based on an individual or blanket certification of analysis supplied to United Aluminum by its vendor(s):

	VENDOR CERTIFICATION MIN	MAX
SILICON		0.25
IRON		0.40
COPPER		0.10
MANGANESE		0.10
MAGNESIUM	2.2	2.8
CHROMIUM	0.15	0.35
ZINC		0.10
OTHER ELEMENTS (EACH)		0.05
OTHER ELEMENTS (TOTAL)		0.15
ALUMINUM	REMAINDER	

MECHANICAL PROPERTY RESULTS

This is to certify that the following are the results of the mechanical property test(s) performed by United Aluminum, based on a minimum of one sample for the order:

TENSILE STRENGTH (KSI)	28.2
ELONGATION (%)	24

Any test results reported above are subject to the limitations of the testing process. All sales are subject to United Aluminum's Terms and Conditions contained on the reverse of its Sales Order Acknowledgement.

WS SHIP SHIP 2

03/27/1992 14:22:15
00124-00002 05254

TITLE	REV.	
CRIMP RING	B	74797

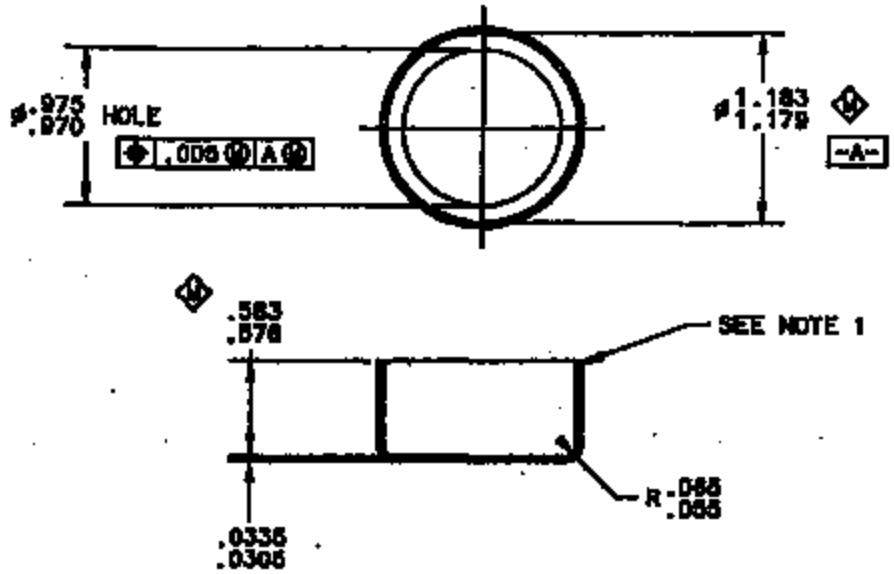

NOTES:
1. PINCH OFF RADIUS ALLOWED.
2. .002 MAX. BURR ALLOWED.
3. PARTS TO BE SHIPPED, ISSUED, AND STORED IN SEALED PLASTIC BAGS.
4. MATERIAL CERTIFICATION REQUIRED WITH EACH SHIPMENT.

CERTIFIED PRINT
Parts Made To This Print Must Conform To
ENG. STD. E9898 REV. E
Date JUL 16 1992

SUPERSEDES DWG. 74797 REV. A DATED 11-2-90

PART NO.	MATERIAL	FINISH
74797-1	ALUMINUM 5052	

BY	CHG. PLEBANIC 11-2-90
CH.	1-30-91
ENG.	

MAKEPEACE

TEXAS INSTRUMENTS
ATTLEBORO, MASSACHUSETTS

KIDDON
ELECTRICAL PRODUCTS DIVISION

SIZE A

DWG. NO. 74797

CODE IDENT NO. 03647

TI-NHTSA 008567

Paratech, Inc.

MINIATURE TECHNICAL CERAMICS

15940 MINNESOTA AVENUE • P.O. BOX 718 • PARAMOUNT, CALIFORNIA 90723
TELEPHONE (213) 633-2048 • FAX (213) 633-8907

MATERIAL CERTIFICATION

DATE: 6-30-92

TEXAS INSTRUMENTS, INC.

ORDER NO.: 505108677

PART NO : 74078-148 REV. NO.: G

QUANTITY THIS SHIPMENT: 80,000

SHIPMENT DATE: 6-30-92

PART DESCRIPTION: PIN

WE CERTIFY THAT THE MATERIAL USED TO PRODUCE THE PRODUCT IN THIS SHIPMENT, NAMELY PIN / STEATITE - L3, CONFORMS TO T.I. DRAWING AND T.I. PURCHASE ORDER REQUIREMENTS.

PRODUCTION MANAGER

TRANSFER PIN

REV. G

74078

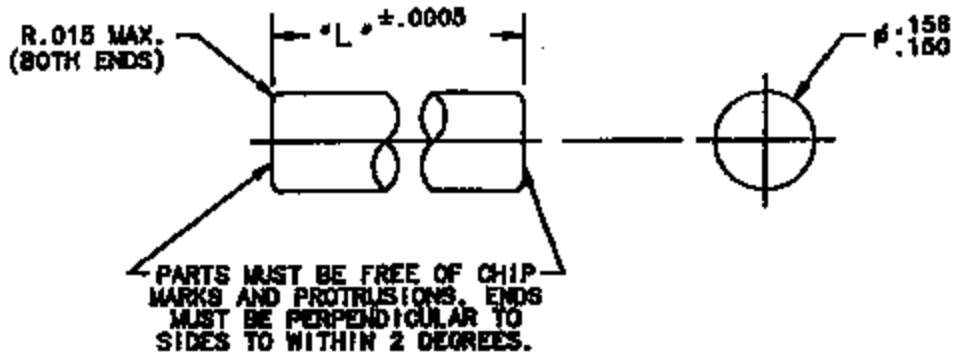

"L" LENGTH IS DETERMINED BY THE SUFFIX OF THE PART NUMBER IN THOUSANDTHS OF AN INCH. I.E.;

PART NO.	"L"
74078-155	.155
74078-210	.210

VENDOR WILL BE PREPARED TO FURNISH PINS .130 - .250 LONG.

NOTES:

1. FINISHED PARTS TO BE SHIPPED, ISSUED AND STORED IN SEALED PLASTIC BAGS. SEALED PLASTIC BAGS TO CONTAIN 20,000 PINS(OR LESS FOR PARTIAL BAGS). BAGS MUST BE CLEARLY LABELED WITH THE PART NO. AND THE QUANTITY OF PARTS IDENTIFIED ON THE OUTSIDE OF EACH BAG.
2. MATERIAL CERTIFICATION REQUIRED WITH EACH SHIPMENT.

MATERIAL: L-3 GRADE STEATITE (DC-186E) OR
L-3 GRADE STEATITE (DC-144E)

CURE PER SPEC.—— 50502-2

SHRINKAGE SPEC.—— 50501-1

CERTIFIED PRINT
Parts Made To This Print Must Conform To
ENG. STD. E9898 REV. E
Date JUL 16 1992

THIS DWG. SUPERSEDES 74078 REV. "E" DATED 6-4-86

15												013	01	M81	P32-3	P35

BY TOM DALL 10-17-88
CK.
ENG. Alan Hanes 5-20-91

TEXAS INSTRUMENTS
ATTLEBORO, MASSACHUSETTS 02703

KLIXON
CONTROL PRODUCTS DIVISION

SIZE A

PART NO. 74078

[illegible]

[illegible]

TEXAS INSTRUMENTS, INC.
P.O. BOX 655
ATTLEBORO, MA 02703

PARKER HANNIFIN CORPORATION
J.B.L. DIVISION
WEST CRAFT CIRCLE
SPARTANBURG, S.C. 29303
TELEPHONE (803) 573-7332

J.B.L. Division of Parker Seal certifies that the material used to produce the product in this shipment, namely SILICONE/ 87519, conforms to TI drawing and TI purchase order requirements.

PART TITLE... ENVIRONMENTAL SEAL

CUST P/N.. [redacted] REV B | DATE SHIPPED | P/N... [illegible]

J.B.L. P/N.. 207210 | 10-21-91 | D/N... 91401-1

SILICONE COMPOUND... 87519 | QUANTITY... 5,000

Very Truly Yours,
J.B.L. Division

[illegible]

[illegible]
Quality Control Manager

STI/MB

DTG

TI-NHTSA 006570

DEVICE # 52/57PS
PROJ. # 3355

TITLE ENVIRONMENTAL SEAL

REV E

74247

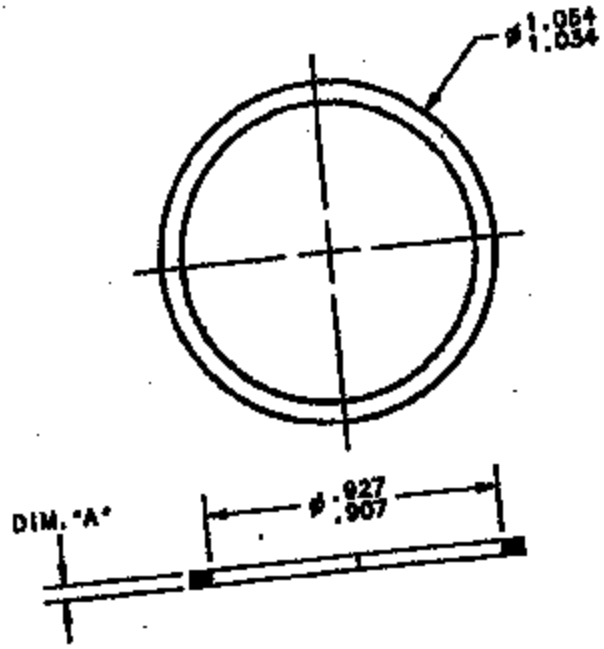

CERTIFIED PRINT
ENG. STD. E9898 REV. 6
Date NOV 2 2 1991

NOTES:

1. MATERIAL CERTIFICATION REQUIRED WITH EACH SHIPMENT.
2. 74247-3 IS TO BE RED IN COLOR WITH 3 BLACK MARKS ON THE EXTERNAL CIRCUMFERENCE AT 120° INTERVALS.

THIS DWG. SUPERSEDES 74247 REV. "D" DATED 10-14-88

PART NO.	MATERIAL	DUROMETER	COLOR	DIM. "A"
74247-1	BUNA N JBL N7014-50	50 - 60	BLACK	.040-.06
74247-2	SILICONE JBL S7424-5	55 - 65	RED	.040-.06
74247-3	SILICONE JBL S7424-5	55 - 65	SEE NOTE 2	.040-.06
[redacted]	SILICONE JBL (T-B-D)	55 - 65	BLUE	.040-.06

REVISED 7-1-91 AND NOTE 2-
D DIM. "A" TO TABLE.
BY: TOM DAIL 10-1-91

REWORK
BY: TOM DAIL 8-19-91

TEXAS INSTRUMENTS
ATTLEBORO, MASSACHUSETTS 02703

Bunan CORPORATION

A

74947

TI-NHTSA 00

REPORT OF ISR TESTING
FORD PASSENGER CAR
ELECTRONIC SPEED CONTROL
DEACTIVATION PRESSURE SWITCH
PS/92/82

TEXAS INSTRUMENTS INCORPORATED
CONTROL PRODUCTS DIVISION
PRECISION CONTROLS DEPARTMENT
34 FOREST STREET
ATTLEBORO, MA 02703

TEST LOT NO.	TEST	DEVICE
TESTED BY		
APPROVED BY	TEXAS INSTRUMENTS — MATERIALS & CONTROLS GROUP ATTLEBORO, MA 02703	DOC.
DATE 92-08-17		PAGE 1

FORM 5298

TABLE OF CONTENTS

1.0 **GENERAL**

1.1 Customer: Ford Motor Company P.I.A. from Dana-Weatherhead

1.2 Part Numbers:

1.2.1 Ford P/N: F2AC-9F924-AA

1.2.2 Dana P/N: 120-55046

1.2.3 TI P/N: 77PSL3-1

1.3 Engineering Specification: (inv delta) ES-F2VC-9F924-AA

1.4 Date of Completion: 920811

1.5 Quantity of Units Tested: 72

1.6 Disposition of Tested Units: All devices are presently retained under quarantine, completely separate from any production devices, to be destroyed per the ES at a later date after full IQR approval is obtained.

1.7 TI test series number: 245-15-129

1.8 TI Pressure Switch test report number: PS/92/82

TEST LOT NO.	TEST	DEVICE
TESTED BY		
APPROVED BY	TEXAS INSTRUMENTS — MATERIALS & CONTROLS GROUP, ATTLEBORO, MA 02703	DOC.
DATE 92-08-12		PAGE

FORM 5265

2.0 OBJECTIVE

This testing was performed to demonstrate the ability of 77PSL3-1 to conform to customer specifications given in (inv delta) ES-F2VC-9F924-AA, in fulfillment of the requirements of the Initial Sample Report. Units tested were built using fully qualified production components and production assembly equipment.

3.0 TEST PROCEDURES AND RESULTS

All switches were tested per Ford Engineering Specification (inv delta) ES-F2VC-9F924-AA. A copy of this ES is included in Appendix 4.1. Procedural details are therefore omitted from the presentation of results in most cases. In those instances where the ES procedure methodology requires elaboration, a complete explanation of the procedure is presented. For all tests, raw data is included in Appendix 4.2.

3.1 CALIBRATION

3.1.1 Devices tested: 245-15-01 thru 72

3.1.2 Procedure: Calibration is checked at room temperature using ambient air as the pressure medium. Calibration settings, as specified on the part drawing, are actuation (electrical contacts opening) at 90 - 160 psig, and release (contacts reclosing) at 20 psig minimum. For the purpose of stabilization, actuation values are recorded on the sixth cycle, after subjecting the switch to two (2) pressure cycles to 800 psig minimum and back to zero, followed by three (3) cycles to approx. 10% above actuation pressure and back to approx. 10% below release pressure. The change in continuity is measured while conducting 750 +/- 50 milliamps at 13.0 +/- 1.0 volts DC.

3.1.3 Equipment: Custom TI designed and built pressure check station, using Heise Model CM96365 pressure gage calibrated on a regular quarterly schedule. Continuity change measured on custom TI designed and built equipment meeting the above electrical parameters.

3.1.4 Initial Results: Prior to proof testing, the average actuation was found to be 126 psi with a sigma of 6.2; after proof the average actuation was 131 psi with a sigma of 4.9. The average shift is 4%. Prior to proof testing, the average release was found to be 113 psi with a sigma of 6.5; after proof the average release was 119 psi with a sigma of 5.7. The average shift is 5%.

3.1.5 Final Results: Prior to proof testing, the average actuation was found to be 130 psi with a sigma of 5.4; after proof the average actuation was 129 psi with a sigma of 5.3. The average shift is -0.8%. Prior to proof testing, the average release was found to be 108 psi with a sigma of 7.7; after proof the average release was 108 psi with a sigma of 6.6. The average shift is 0.

3.2 VOLTAGE DROP

3.2.1 Devices tested: 245-15-01 thru 72

3.2.2 Procedure: Voltage drop is checked simultaneously with Calibration (see 3.1.2). The measurement is taken at room temperature using ambient air as the pressure medium. For the purpose of stabilization, data is recorded on the sixth cycle, after subjecting the switch to two (2) pressure cycles to 800 psig minimum and back to zero, followed by three (3) cycles to approx. 10% above actuation pressure and back to approx. 10% below release pressure. The voltage drop is measured while conducting 750 +/- 50 milliamps at 13.0 +/- 1.0 volts DC.

3.2.3 Equipment: Fluke Model 8020B Digital Multimeter, calibrated quarterly, used in conjunction with the continuity equipment in 3.1.3.

3.2.4 Initial results: Values for all devices fell below the specification of 200 millivolts maximum by close to two orders of magnitude; no specific statistics calculated for this reason.

3.2.5 Final results: With the exception of parts undergoing Impulse testing (devices 245-15-01 thru 12 and 37 thru 48), all final results were comparable with initial results. The Impulse parts experience an increase in the voltage drop reading due to the specified 25,000 cycles run at full electrical load, which causes a certain amount of normal erosion of the contact surfaces. All 24 Impulse devices still fell significantly below 200 mV maximum, and statistics show a Cpk of 2.53.

3.3 CURRENT LEAKAGE

3.3.1 Devices tested: # 245-15-01 thru 72.

3.3.2 Procedure: Per the ES section III. C. This test is conducted as a pass/fail.

3.3.3 Equipment: Associated Research HyPot test unit used as power source for 500 VAC, 60 Hz test circuit. Fluke Model 8020B Digital Multimeter, calibrated quarterly, used to measure voltage drop across a series resistance of one megohm (+/- 5%).

3.3.4 Initial results: All devices passed.

3.3.5 Final results: All devices passed.

3.4 PROOF

3.4.1 Devices tested: 245-15-01 thru 72

3.4.2 Procedure: Per the ES section III. D. This test is conducted as a pass/fail. The test pressure specified on the part drawing is 3000 psi.

3.4.3 Equipment: Enerpak model P-392 hydraulic hand pump using Enerpak hydraulic fluid as the pressure medium. Hydraulic fluid is removed from the devices using a combination of vacuum and residue-free solvent Sprayon(TM) Hi-Tech 02002 TF Electrical Contact Cleaner. US Gauge #33714 reading to 5000 psig with 100 psi increments, resolvable to 50 psi., calibrated quarterly. Custom TI designed and built safety enclosure.

3.4.4 Initial Results: All devices passed.

3.4.5 Final Results: All devices passed.

3.5 IMPULSE

3.5.1 Devices tested: 245-15-01 thru 12 and -37 thru 48

3.5.2 Procedure: Per the ES section III. E.

3.5.3 Equipment: Thermotron model S-4 Mini-Max environmental chamber capable of -55 C to +200 C, humidity uncontrolled. Custom TI designed and built cycler, utilizing Enerpak integrated hydraulic pressure source, TI315 Programmable Logic Controller, Moog servovalve and controller, Simpson signal generator, and opposing-piston fluid isolators, to produce a hydraulic-fluid flow-type primary, with a brake-fluid dead-end-type secondary terminated with a 24-station manifold equipped with internal heaters. Capability to 5 Hz at 0-1450 psig cycle. Custom TI designed and built 24 station Switch

Monitor Circuit which automatically stops the cycler in the event of abnormal switch action, defined as continuity change which does not track the signal from the signal generator. Thermocouple readouts calibrated quarterly. 12-station inductive load bank, per the schematic found in the ES (figure 4) used in the last 25K cycles.

3.5.4 Results: All devices passed the acceptance requirements of the ES (sections A, B, C, D).

3.6 BURST

3.6.1 Devices tested: 245-15-67 thru 72.

3.6.2 Procedure: Per the ES section III. F. After holding 7000 psi for 30 seconds as specified, the devices were inadvertently pressurized to approx. 7600 psi.

3.6.3. Equipment: Same as 3.4.3, with the addition of Enerpak gauge reading to 10,000 psig with 100 psi increments, resolvable to 50 psi, calibrated quarterly.

3.6.4. Results: All six devices passed 30 seconds at 7000 psig without evidence of fluid leakage or seepage from the switch or threads.

At 7600 psi, one device (-70) displayed evidence of fluid seepage.

3.7 HUMIDITY

3.7.1 Devices tested: 245-15-25 thru -30.

3.7.2 Procedure: Per the ES section III. G. Please note that performing a full characterization per the ES consists of measurement of actuation, release, voltage drop, current leakage, and proof. This battery of tests when performed on six (6) devices takes approximately 2 hours to complete. Therefore "Within 15 minutes..." called out in the ES (section III. G. 2. a.) is an acceptance requirement that is physically impossible to meet. Every effort is made to complete final characterization within the two hour period stated above.

3.7.3 Equipment: Humidity chamber RK model 5S.

3.7.4 Results: All devices passed the acceptance requirements of the ES (sections A, B, C, D).

3.8 SALT SPRAY

3.8.1 Devices tested: 245-15-31 thru -36.

3.8.2 Procedure: Per the ES section III. H.

3.8.3 Equipment: Harshaw salt spray chamber.

3.8.4 Results: All devices passed the acceptance requirements of the ES (sections A, B, C, D).

3.9 VIBRATION

3.9.1 Devices tested: 156-15-61 thru 66.

3.9.2 Procedure: Per the ES section III. I.

3.9.3 Equipment: Vibration table, Ling, model A395 with Hewlett-Packard model 5427 controls. Air tank with 350 psig minimum pressurized Nitrogen used to actuate devices with at least 1.1 times maximum actuation specification on part drawing; 160 psig * 1.1 = 176 psi minimum.

3.9.4 Results: All devices passed the acceptance requirements of the ES (sections A, B, C, D).

3.10 TERMINAL STRENGTH

3.10.1 Devices tested: 245-15-13 thru -24.

3.10.2 Procedure: Per the ES section III. J.

3.10.3 Equipment: Custom TI designed and built fixtures for gaging terminal movement after force application and for application of impact via a pendulum. This equipment is regularly used on the 57PS/77PS assembly lines in testing to TI Quality Assurance Specifications.

3.10.4 Results: All devices passed the acceptance requirements of the ES (sections A, B, C, D).

3.11 VACUUM

3.11.1 Devices tested: 245-15- 55 thru 60.

3.11.2 Procedure: Per the ES section III. K.

3.11.3 Equipment: Kinney vacuum pump. Sensotec pressure transducer range 0-25 psia calibrated quarterly, with Fluke model 8020B Digital Multimeter readout, calibrated quarterly.

3.11.4 Results: All devices passed the acceptance requirements of the ES (sections A, B, C, D).

3.12 TEMPERATURE CYCLE

3.12.1 Devices tested: 245-15-49 thru 54

3.12.2 Procedure: Per the ES section III. L.

3.12.3 Equipment: Same as 3.5.3.

3.12.4 Results: All devices passed the acceptance requirements of the ES (sections A, B, C, D).

3.13 FLUID RESISTANCE

3.13.1 Devices tested: 245-15-01 thru -36.

3.13.2 Procedure: Per the ES section III. M.

3.13.3 Equipment: Fluids as called out in ES table in III. M. 1. c. plus appropriate beakers and storage apparatus/ vented hood.

3.13.4 Results: The 36 devices were divided into groups as follows for subsequent testing. Results of these tests are reported in the section indicated.

3.13.4.1 Impulse (3.5), -01 thru -12

3.13.4.2 Terminal Strength (3.10), -13 thru -24.

3.13.4.3 Humidity (3.7), -25 thru -30.

3.13.4.4 Salt Spray (3.8), -31 thru -36.

3.14 NOISE

In certain vehicle applications, the brake pressure switch action has been shown to be transmitted to the passenger compartment as audible noise and corresponding tactile feel in the brake pedal. A "silent" device has been developed by Texas Instruments in order to address this concern. At the same time, a means of quantifying the noise/feel was explored. The hypothesis was that a sudden motion of pressure-sensing components within the switch caused a pressure wave to propagate from the switch. Characterization of this effect using high-speed pressure transducers showed that "noisy" devices produce a large negative pressure spike at the point of switch activation, and supported the hypothesis. The "silent" devices produce little or no spike. See Appendix 4.3 for a pressure trace of a typical silent device.

Ultimately (inv delta) ES-F2VC-9F924-AA will be updated to include a section on noise testing, to be applicable only to devices designated as silent. For this validation, in lieu of an officially finalized noise specification, a total of 12 devices (6 from this test and 6 similar devices) were initially characterized for noise, then run through Impulse or Thermal Cycle testing, then recharacterized for noise at the end.

3.14.1 Devices tested:

77PSL3-1	Impulse:	245-15-37, 38, 39
77PSL3-1	Thermal Cycle:	245-15-49, 50, 51
77PSL5-2	Impulse:	245-15-81, 82, 83
77PSL5-2	Thermal Cycle	245-15-105, 106, 107

3.14.2 Procedure: The device under test is installed on the test manifold. Air is evacuated via a vacuum pump. The manifold is filled with the test fluid. Pressure to 300 psi is applied and the signal from the high-speed transducer is captured on a digital oscilloscope.

3.14.3 Equipment: Custom TI designed and built equipment, utilizing a single-port test manifold within a protective enclosure. The manifold is evacuated by a Piab H-125 pneumatic vacuum pump. DOT 3 Brake Fluid is introduced via a fluid reservoir. Pressure is applied via pressurized air which is introduced to an air-over-oil chamber which connects to the test manifold. The dynamic pressure signal during switch actuation is measured with a Kistler High-Frequency Dynamic Pressure Transducer model 606A (SN C46154) with a Kistler 5004 Charge Amplifier whose output connects to channel A of a dual-channel Nicolet 4094A Digital Oscilloscope. The electrical switching action of the device under test is recorded simultaneously on channel B using a 5-volt source and a 1K ohm load resistor.

3.14.4 Initial results: All twelve test devices produced zero pressure spike.

3.15.5 Final results: All twelve test devices produced zero pressure spike.

Appendix 4.1
Ford Engineering Specification
(inv delta) E5-F2VC-9F924-AA

TEST LOT NO.	TEST	DEVICE
TESTED BY		
APPROVED BY	TEXAS INSTRUMENTS — MATERIALS & CONTROLS GROUP, ATTLEBORO, MA 02703	DOC.
DATE 92-08-17		PAGE 14

FORM 5298

Engineering Specification

PART NAME	PART NUMBER
SWITCH ASSEMBLY - SPEED CONTROL DEACTIVATE	▽ E8-F2VC-9F924-AA

LET																			
PR																			
LET																			
PR																			

DATE	LET	PR	REVISIONS	DR	CK	REFERENCE
	C		ADDED DATA TO COMPLETE			PREPARED/APPROVED BY
901130			SPEC. & RETYPED			D.S. Peo 90
			NCODE/0079779002			CHECKED BY / DETAILED BY
						CONCURRENCE/APPROVAL SIGNATURES
						DESIGN ENGINEERING SUPERVISOR
						R. Thomas Supervisor
						DESIGN ENGINEERING MGT.
						MANUFACTURING ENGRG.
						QUALITY CONTROL
						Supervisor
						SUPPLIER QUALITY ASSISTANCE
						R.G. Kennedy
						ELECTRONICS DIVISION
						2000

▽ CONTROL ITEM — THE ▽ SYMBOL ALSO IDENTIFIES PRODUCT ENGINEERING DESIGNATED CRITICAL CHARACTERISTICS AND ADDITIONAL CRITICAL CHARACTERISTICS IDENTIFIED BY PROCESS ENGRG. MUST APPEAR ON ENG-101 CONTROL PLANS WHICH REQUIRE PRODUCT ENGINEERING APPROVAL.

SWITCH ASSEMBLY - SPEED CONTROL DEACTIVATE

I. General

This specification covers the test requirements for the speed control deactivate switch -9F924- used in the electronic speed control system. Design changes on the switch assembly or its components shall not be made without compliance to Section V of this specification and written approval from the releasing Production Engineering Office.

This engineering specification is a supplement to the released drawing on the above part, and all requirements herein must be met in addition to all other requirements of the part drawing. Minimum measures necessary for demonstrating compliance to these requirements are given in each section.

The engineering tests, sample sizes, and test frequencies contained within this engineering specification reflect the minimum requirements established to provide a regular evaluation of conformance to design intent. The engineering test program is intended as a supplement to normal material inspections, dimensional checking and in-process controls, and should in no way adversely influence other inspection operations.

Q1 suppliers may implement different test sample sizes and frequencies providing these changes have been included in an Alternate Control Plan approved by the design responsible Product Engineering Office and concurred in by SQA.

II. PRODUCTION VALIDATION AND IN-PROCESS TESTS

- Production Validation (PV) Tests must be completed satisfactorily with parts from production tooling (and processes where possible) before ISIR approval and authorization for shipment of production parts can be effected. Parts must be revalidated completely, or per Section V whenever any change is made which could possibly affect part function or performance.

- In-Process Test Phase 1 (IP-1) - IP-1 tests are used to demonstrate process capability and must be completed using initial production parts from production tooling and processes prior to first production shipment approval. IP-1 tests are to continue in effect until process capability is demonstrated.

- In-Process Tests Phase 2 (IP-2) - IP-2 test program may be implemented only after process capability has been established. Tests must be completed with production parts on a continuing basis. Samples for these tests must be selected on a random basis to represent the entire production population as much as possible. In the event that any of the requirements in these tests is not met, the reaction plan specified in Ford Q101 Sect. 3.5, "Engineering Specification (ES) Test Performance Requirements" shall be invoked.

SECTION III. TABLE OF TESTS

Item	Test Name Functional Tests	PRODUCTION VALIDATION Minimum Sample Size	PRODUCTION VALIDATION Statistical Test Acceptance Criteria	IN-PROCESS IP-1 Minimum Sample Size	IN-PROCESS IP-1 Statistical Test Acceptance Criteria	IN-PROCESS IP-2 Minimum Sample Size	IN-PROCESS IP-2 Statistical Test Acceptance Criteria
III.							
A	Calibration	72	P90-.96	100%	All Must Pass	100%	All Must Pass
B	Voltage Drop	72	P90-.96	12/Mo.	P90-.84	4/Lot	" " "
C	Current Leakage	72	P90-.96	3/Mo.	P90-.56	4/Lot	" " "
D	Proof Test	72	P90-.96	12/Mo.	P90-.84	4/Lot	" " "
F	Burst	6	P90-.72	3/Mo.	P90-.56	4/Lot	" " "
I	Vibration	6	P90-.72	3/Mo.	P90-.56	6/6 Mo.	P90-.72
J	Terminal Strength	12	P90-.84	6/Mo.	P90-.72	4/Lot	All Must Pass
K	Vacuum	6	P90-.72	3/Mo.	P90-.56	6/6 Mo.	P90-.72
L	Temperature Cycle	6	P90-.72	3/Mo.	P90-.56	6/6 Mo.	P90-.72
M	Fluid Resistance	36	P90-.94	36/12Mo	P90-.94	36/12Mo.	P90-.94
	Durability Tests						
III.							
E	Impulse	24	P90-.90	12/Mo.	P90-.84	3/3 Mo.	P90-.56
G	Humidity	6	P90-.72	3/Mo.	P90-.56	6/6 Mo.	P90-.72
H	Salt Spray	6	P90-.72	3/Mo.	P90-.56	6/6 Mo.	P90-.72

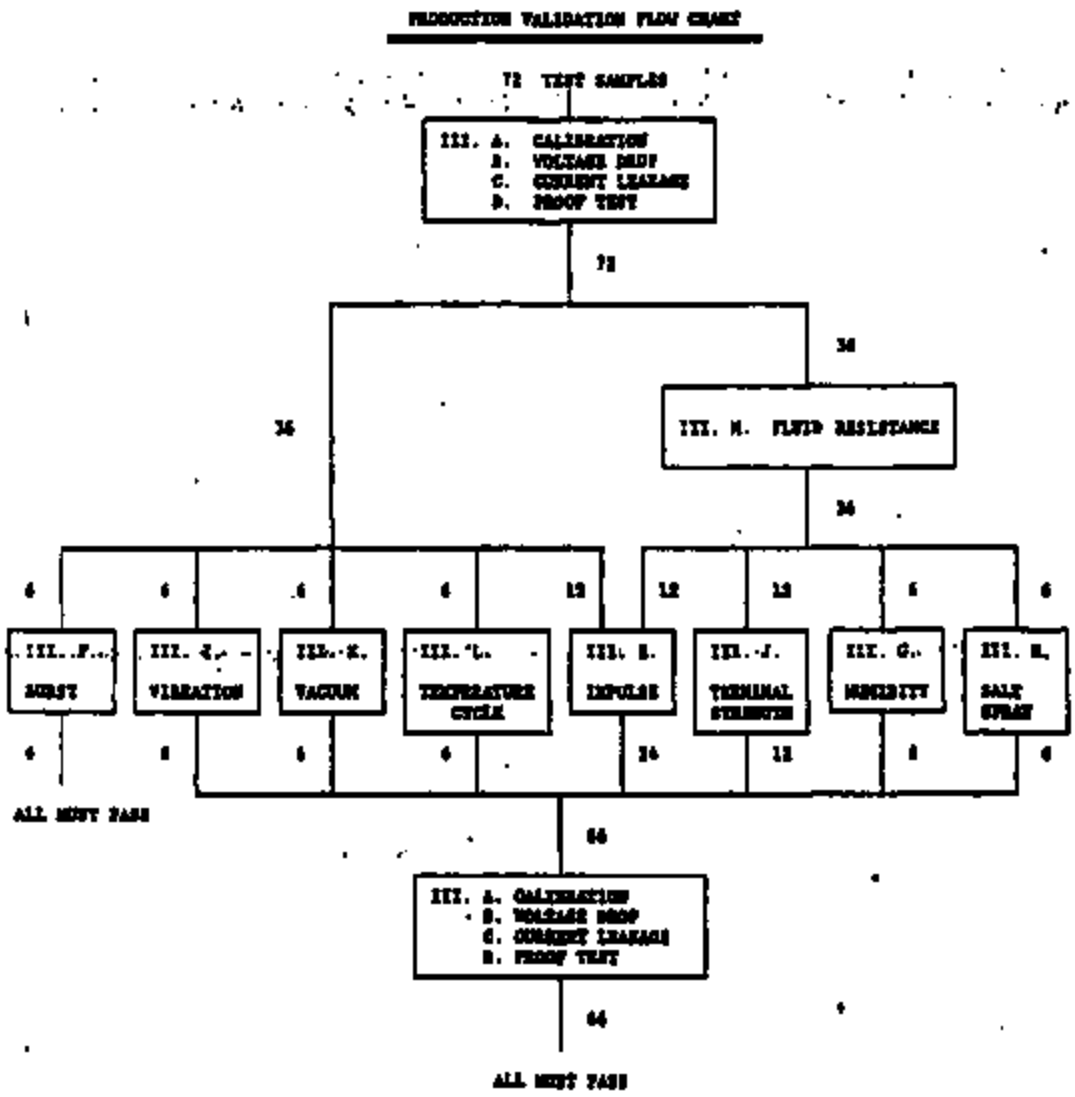

III. TEST PROCEDURES AND REQUIREMENTS

A. Calibration

1. Test Requirements

a. Switch calibration is to be checked at room temperature (18°C-35°C) using ambient air or equivalent.

b. Calibration settings shall be specified on the part drawing with the settings checked after 1 or more pressure cycles with ambient air, or equivalent. Pressure cycle range is to be determined by the manufacturer to insure switch calibration stability. The cut-in and differential set points are to be measured while conducting 750 ± 50 milliamperes while 13.0 ± 1.0 volts D.C. is applied. The cut-in point is to be checked with increasing pressure.

c. The cut-out point is to be checked with decreasing pressure, and the differential set point is to be calculated using the cut-in pressure minus the cut-out pressure.

2. Acceptance Requirements

a. Nonconformance is defined as any switch point which falls outside the tolerance band specified on the part drawing.

B. Voltage Drop

1. Test Requirements

a. Voltage drop is to be measured after 2 or more cycles with ambient air or equivalent from 0 to 10,000 ± 172 KPa (1450 ± 25 PSI) while conducting 750 ± 50 milliamps and 13.0 ± 1.0 volts D.C. is applied to the switch. Under these conditions with the switch closed the voltage drop is to be measured. Millivolt connection interface at terminals to be less than 10 millivolts.

2. Acceptance Requirements

a. Nonconformance is defined as a voltage drop in excess of 200 millivolts.

III. TEST PROCEDURES AND REQUIREMENTS (cont'd)

C. Current Leakage

1. Test Requirements

a. Current leakage is to be checked with 500 volts, 60 HZ alternating current.

b. Current leakage is to be checked:

(1) Between the switch leads with the contacts open.
(2) Between the lead and the switch housing with contacts closed.
(3) Between either lead and switch housing with the contacts open.

2. Acceptance Requirements

a. Nonconformance is defined as any leakage current in excess of one hundred (100) microamperes.

D. Proof Test

1. Test Requirements

a. Subject sample switches to Section A to establish their initial switching pressures.

b. Proof test is to be conducted using brake fluid or equivalent as the pressure medium. Test pressure shall be as specified on the part drawing. Test pressure shall be isolated from pressure source and held for not less than 30 seconds.

c. Recheck the switches to Section A.

2. Acceptance Requirements

a. No evidence of fluid leakage, seepage, or drop in test pressure greater than 430 KPa.(62 PSI) is permitted.

b. A change in cut-in and cut-out pressures greater than ± 5% from the initial value is not permitted.

c. The test samples must be destroyed after testing.

III. TEST PROCEDURES AND REQUIREMENTS (cont'd)

E. Impulse

1. Test Requirements

a. Test the switch for a total of 500,000 cycles. Cycle pressure between (low) 0-276 KPa (0-40 psi) and (high) 10,000 ± 345 KPa (1450 ± 50 psi).

1) 0 - 475,00 cycles: 13 ± 1 volts, trace current to monitor function.

2) 475,001 - 500,000 cycles: 13 ± 1 volts D.C., 750 ± 50 ma., per figure 4.

b. Brake fluid temperature to be 135 ± 14°C and ambient temperature to be 107°C min.

c. Cycle rate is to be 110-130 cycles per minute.

d. Switch must open and close each cycle.

2. Acceptance Requirements

a. After impulse test check to sections A, B, C, & D using the procedure established in each section.

b. Nonconformance is defined as any switch not meeting the criteria in sections A, B, C, & D.

c. Samples used for this test must be destroyed after all testing is completed.

F. Burst

1. Test Requirement

a. Burst strength is to be checked using brake fluid or equivalent as the pressure medium.

b. Pressurize the switch to 48.3 MPa (7000 PSI) minimum and hold for 30 seconds minimum.

2. Acceptance Requirements

a. Nonconformance is defined as any evidence of fluid leakage or seepage from the switch or threads. Samples used for this test must be destroyed after testing is completed.

G. Humidity

1. Test Requirements

a. Mount the switch in the test port in a humidity chamber. Currently released mating electrical connector must be installed before start of test.

b. Subject the switch to ten (10) continuous humidity cycles as follows:

(1) Raise temperature to 65 +10/-2 °C over 2.5 hours; at 90-98% relative humidity.

(2) Hold 3 hours at 65 +10/-2 °C at 90-98% relative humidity.

(3) Lower temperature to 25 +10/-2 °C over 2.5 hours; at 80-98% relative humidity.

2. Acceptance Requirements

a. Within 15 minutes after completion of the tenth humidity cycle check the switch to sections A, B, C, D, using the procedure established in each section.

b. Nonconformance is defined as any switch not meeting the criteria in sections A, B, C, or D.

H. Salt Spray

1. Test Requirements

a. Mount the switch in the test port in a salt spray chamber. The currently released mating electrical connector and wiring must be installed prior to start of test.

b. Expose the switch assembly to 72 hours of salt spray per ASTM B-117.

2. Acceptance Requirements

a. After exposure, check the switch to sections A, B, C, D, using the procedure established in each section.

b. Nonconformance is defined as any switch not meeting the criteria in sections A, B, C, or D. Samples used for this test must be destroyed after all testing is completed.

III. TEST PROCEDURES AND REQUIREMENTS (cont'd)

1. Vibration

I. Test Requirements

a. Mount the switch in the test port and attach the currently released mating electrical connector before start of test.

b. Switches are to be vibrated in all 3 planes with electrical continuity being monitored during the entire test. See Figure 1 for switch orientation in the 3 planes. Vibration tests are to be conducted at room temperature using brake fluid, ambient air, or equivalent as the pressure medium.

c. Internal pressure shall be maintained at 0 KPa G. when the switch is in the closed position and 1.1 times max actuation pressure shown on print when the switch is in the open position.

d. Vibrate the switch at 1.5 mm displacement (peak-to-peak) while varying the frequency uniformly from 5 to 50 to 5 Hz over a 5 minute period.

e. Vibrate the switch in alternate one-hour periods in the open and closed positions for a total of 8 hours in each plane. (Total test time is 24 hours).

2. Acceptance Requirements

a. After the entire vibration sequence check the switches to sections A, B, C, or D using the procedure established in each section.

b. Nonconformance is defined as any evidence of leakage or any change in electrical continuity/discontinuity during the vibration cycles, or any switch not meeting the criteria in sections A, B, C, or D. Samples used for this test must be destroyed after all testing is completed.

III. TEST PROCEDURE AND REQUIREMENTS (CONT'D)

J. Terminal Strength

1. Test Requirements

a. Mount the switch in the test port.

(1) Apply a 89 ± 9 N axial force to each terminal.

(2) With a pendulum apply a 45 ± 5 N impact force to the switch housing at the connector and, perpendicular to the centerline axis of the switch. See Figure 2 for force application point and direction.

2. Acceptance Requirements

a. Check the switch to sections A, B, C, and D using the procedures established in each section.

b. Nonconformance is defined as any terminal or housing fracture, or any switch not meeting the criteria in sections A, B, C, or D.

K. Vacuum

1. Test Requirements

a. Mount the switch in the test port. Vacuum tests are to be conducted at room temperature using ambient air as the pressure medium.

b. Subject the switch to 5 cycles of vacuum from atmospheric pressure (760 mm Hg) to an absolute pressure of 3-6 mm Hg. Maintain the vacuum for a minimum of 60 seconds.

2. Acceptance Requirements

a. Check the switch to sections A, B, C, and D using the procedure established in each section.

b. Nonconformance is defined as any switch not meeting the criteria in sections A, B, C, and D.

III. TEST PROCEDURES AND REQUIREMENTS (cont'd)

L. Temperature Cycle

1. Test Requirements

a. Mount switches in test ports; test to be run using currently released brake fluid.

b. Repeat the following procedure 25 times.

(1) Lower the switch and fluid temperature to at least -40°C.

(2) Cycle the switches ten times at 10 seconds/cycles. One cycle consists of a pressure variation from 0 - 276 KPa.G (0-40 psi) to 10,000 ± 345 KPa.G (1450 ± 50 PSI). Note: Switch must open and close each cycle.

(3) Raise switch and fluid temperature to 38°C minimum.

(4) Repeat Step 2.

c. At completion of Step b, check switches per sections A, B, C, and D.

2. Acceptance Requirements

a. Nonconformance is defined as any evidence of switch fluid leakage, seepage, or not meeting the criteria of sections A, B, C, and D.

M. Fluid Resistance

1. Test Requirements

a. Mount the switch in the test port and orient as installed in the vehicle.

b. Install the currently released mating electrical connector (with wire leads) to the switch.

c. Sequentially, immerse the switch into each of the specified fluids, at a temperature of 23 ± 2 °C, for 5 ± 1 second. Remove the switch and drain and store the switch for the specified time at room temperature, prior to immersing into the next fluid.

III. TEST PROCEDURES AND REQUIREMENTS (cont'd)

Fluid	Drain Time	Storage Time
Reference Fuel C ASTM D471	60 ± 5 min.	none
10W40 Engine Oil	24 ± 1 hour	14 days
Ethylene Glycol/ Water 50/50 by Volume	24 ± 1 hour	24 ± 1 hour
Brake Fluid DOT 3	24 ± 1 hour	48 ± 1 hour
Automatic Transmission/ Power Steering Fluid (same) ESP-M2C138-CJ	24 ± 1 hour	14 days
Isopropyl Alcohol/ Water 50/50 by Volume	24 ± 1 hour	none
Reference Fuel C, ASTM D471 with Methyl Alcohol 85/15 by Volume	24 ± 1 hour	none

d. Per the Flow Chart, subject the prescribed number of immersed switches to the post immersion tests specified below:

III. E. Impulse
III. G. Humidity
III. H. Salt Spray
III. J. Terminal Strength

Acceptance Requirements

a. Switches must fully meet the requirements of the specified post immersion test.

b. Nonconformance is defined as any switch not meeting the criteria in sections A, B, C, or D. Samples used for this test must be destroyed after all testing is completed.

IV. STATISTICAL ANALYSIS METHODS

A. For PV, IP-1 and IP-2 tests, all samples tested must pass. Having all the required sample size pass will provide data to support the conclusion that the switch has a minimum reliability R, at a given confidence of C. The notation Pc-R is interpreted as minimum reliability equal to R, at a confidence C; thus P90-.80 means a minimum reliability of 80% at 90% confidence.

B. All samples must pass in the statistical test acceptance criteria stated for tests with 100% frequency; or samples from lots, which could have a variable size.

V. REVALIDATION REQUIREMENTS

A. No change in design, material, process or component supplier shall be made without prior approval from the releasing Product Engineering Office. As part of approving a change, the releasing Product Engineering Office will establish the portion of the Product Validation tests required to be run to revalidate the switch. The following table is to be used as a guide in determining the type of tests required for revalidation requirements.

REQUIRED CHANGE REVALIDATION

Component	Process or Material Change or New Supplier
1. Terminals, Contacts, or Connector	III, B, C, E, G, H, I, J, L, M.
2. Case or Housing	All Tests
3. Disc or Diaphragm	III, A, D, E, F, I, K, L.
4. Fitting or Fluid Connection	III, D, E, F, H, I, M.

B. Annual revalidation is not required on carryover switches.

VI. LOT DEFINITION

A lot is defined as no more than eight (8) hours of production up to 4,000 pieces. If shifts extend beyond eight (8) hours, or more than 4,000 pieces are produced in a shift, the product must be separated into at least two lots.

VII. RECORD RETENTION

A. Recording and record retention shall conform with Ford Q-101.

B. Production Validation test results and analysis are to be forwarded to the releasing Product Engineering Office before approval for shipment of production parts can be granted.

C. In-Process test results shall be available at the supplier's manufacturing facility for the releasing Product Engineering Office and Ford SQA or its representatives to review on request.

VIII. INSTRUCTIONS AND NOTES

All switches are to be identified with the Ford part number, supplier identification, and a date code indicating final assembly.

All test equipment and test procedures for testing to this specification must be approved by the releasing Product Engineering Office and no change in equipment or procedure may be made without their written concurrence.

Test port configuration is shown in Figure 3.

O-rings, if used in the design, shall be free from cuts, nicks, abrasions or any other damage which would result in a fluid leak.

All switches must have a shipping cap installed over the port threads to prevent contamination. All shipping caps must be approved by the releasing Product Engineering Office prior to production incorporation.

All switches that do not pass the calibration test are to either be readjusted and rechecked, or scrapped. (Salvage of component parts permitted with 100% reinspection).

If product nonconformance occurs for test Sections III. B, C, D, E, F, and J, production shall be stopped and the problems corrected. All production lots shall be sorted 100% prior to shipment. Suspected nonconformance of any shipped parts shall be reported immediately to the releasing Product Engineering Office.

If nonconformance of the statistical acceptance criteria occurs for test Sections III. G, H, I, K, L and M, a cause to recall the subject weeks production and to stop production may result.

IX. COMPILATION OF REFERENCE DOCUMENTS

ASTM B-117, Salt Spray Testing

Ford Q-101, Quality System Standard - 1990 Edition

ES-F0ZB-14A464-AA, Specification - SLV Assy - Wire Connector

ES-F2VF-9C759-AA, Specification - Servo Assembly Speed Control

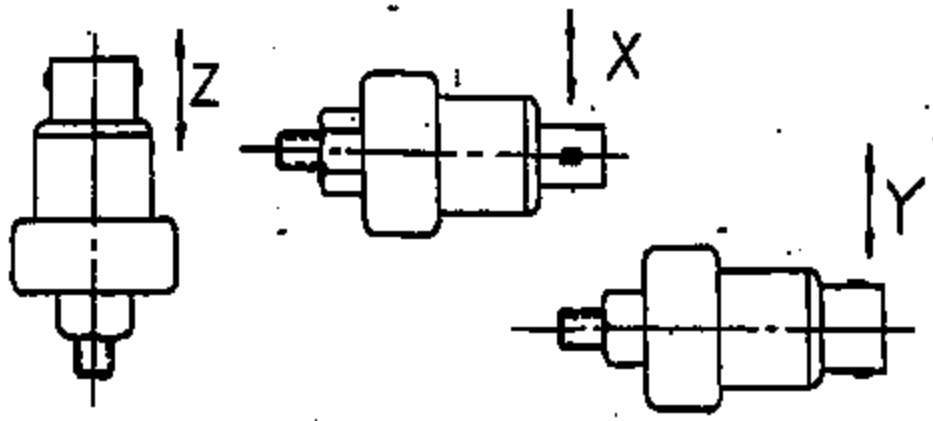

VIBRATION TEST - SWITCH ORIENTATION

FIGURE 1.

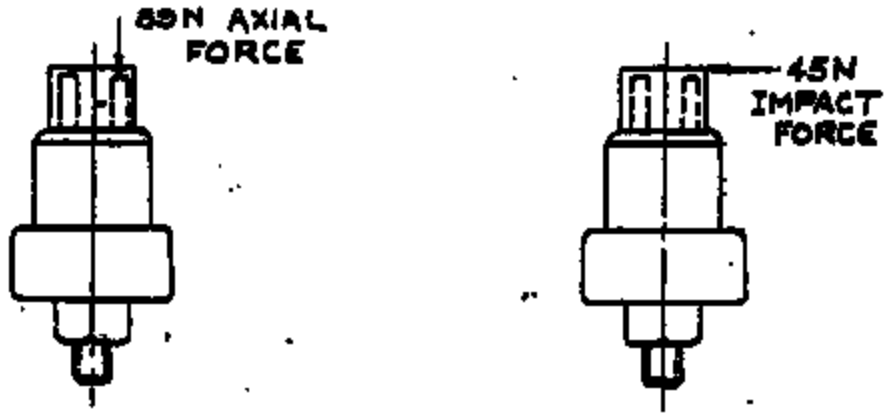

TERMINAL STRENGTH - LOAD ORIENTATION

FIGURE 2.

Engineering Specification

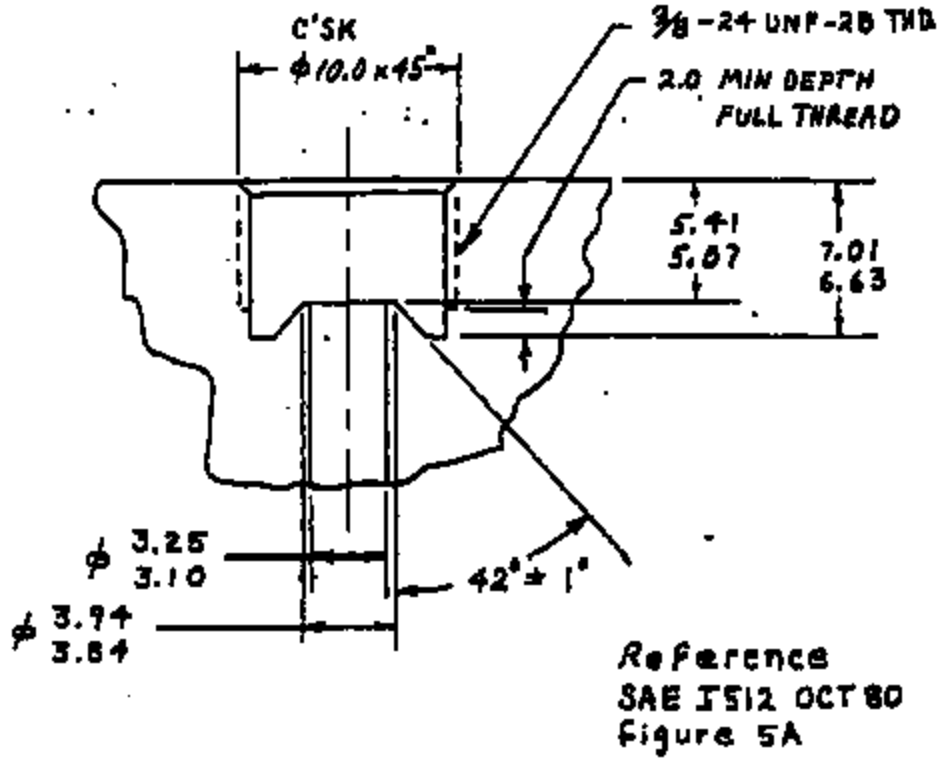

TEST FIXTURE PORT CONFIGURATION

FIGURE 3

FRAME 17 OF 18	REVISED		▽ 85-P270-97924-AA NUMBER

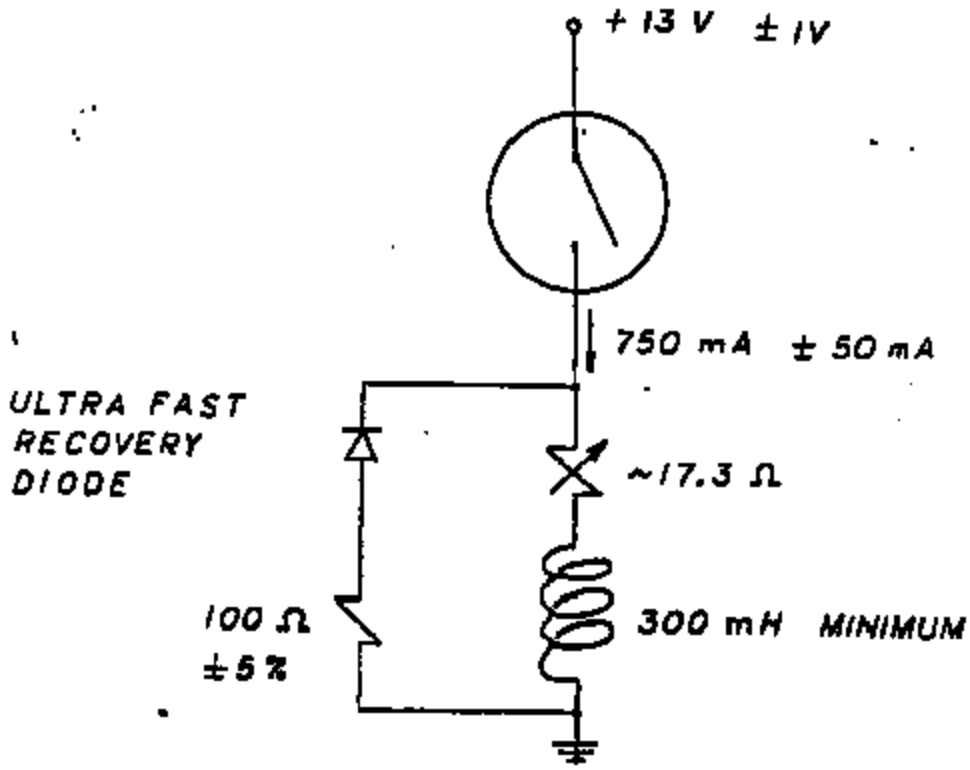

DEACTIVATE SWITCH
TEST SET UP

FIGURE 4

Appendix. 4.2
Data

TEST LOT NO.	TEST	DEVICE.
TESTED BY		
APPROVED BY	TEXAS INSTRUMENTS — MATERIALS & CONTROLS GROUP, ATTLEBORO, MA 02703	DOC.
DATE 82-08-17		PAGE 33

FORM 8298

PRESSURE SWITCH DATA Form 21605 TEST NO. 245-15-179

DEVICE	DATE REQUESTED	REQUESTED BY	REQUESTED COMPL. DATE
77PSL 1-1, 77PSL 1-2	920413	Steve Officer	

PERFORMED BY	DATE STARTED	DATE COMPLETED	APPROVED BY
Jeffrey D'Ocasio	920415		

PROJECT TITLE: Speed Control

CUSTOMER:

PURPOSE OF TEST: Production Validation

PROCEDURE: DES-F206-9F924-AA : Full ISR

Natural Neoprene Bases
ultra-low diff discs.
Act 90-180
Rel 20 min

77PSL 3-1

INITIAL Characterizations

Device #	Act	Rel	Mo Prog	Counter Leak	Booster Proof	Act	Rel	Test	Complete	Test	Complete
245-15-01	139	102	4.1	✓	✓	140	102	Fluid Res	✓	Impulse	✓
-02	137	105	3.1	✓	✓	138	113		✓		✓
-03	132	111	3.8	✓	✓	130	113		✓		✓
-04	131	115	5.7	✓	✓	131	117		✓		✓
-05	139	117	6.1	✓	✓	136	113		✓		✓
-06	134	108	4.7	✓	✓	134	115		✓		✓
-07	135	117	4.5	✓	✓	131	117		✓		✓
-08	133	107	4.3	✓	✓	119	113		✓		✓
-09	134	109	4.5	✓	✓	132	117		✓		✓
-10	131	115	3.3	✓	✓	133	116		✓		✓
-11	130	114	4.4	✓	✓	135	118		✓		✓
-12	136	117	4.3	✓	✓	132	120		✓		✓
-13	136	116	3.3	✓	✓	133	120		✓	Tens. Strength	✓
-14	107	92	4.8	✓	✓	128	117		✓		✓
-15	127	116	3.4	✓	✓	135	125		✓		✓
-16	127	117	4.1	✓	✓	124	111		✓		✓
-17	135	108	3.4	✓	✓	132	121		✓		✓
-18	136	116	3.7	✓	✓	132	116		✓		✓
-19	128	116	5.3	✓	✓	133	112		✓		✓
-20	132	111	3.1	✓	✓	127	109		✓		✓
-21	134	121	3.9	✓	✓	141	128		✓		✓
-22	121	105	3.2	✓	✓	128	115		✓		✓
-23	126	110	2.7	✓	✓	132	120		✓		✓
-24	119	98	3.6	✓	✓	123	117		✓		✓
-25	124	110	3.1	✓	✓	132	118		✓	Humidity	✓
-26	119	108	3	✓	✓	125	117		✓		✓
-27	131	117	3	✓	✓	137	125		✓		✓
-28	131	120	3.2	✓	✓	[illegible]	118		✓		✓

Device #	Act	Rel	My Drop	Complete Test	Complete Report	Act	Rel	Test	Complete	Test	Complete
2-5-1C-29	124	114	3.3	✓	✓	120	110	Fluid Acc	✓	Humidity	✓
-30	114	106	3.3	✓	✓	126	116		✓		✓
-31	129	114	3.9	✓	✓	127	118		✓	Low Temp	✓
-32	125	115	2.6	✓	✓	133	120		✓		✓
-33	[illegible]	104	2.9	✓	✓	115	105		✓		✓
-34	126	119	2.3	✓	✓	138	128		✓		✓
-35	119	109	2.9	✓	✓	123	115		✓		✓
-36	122	117	2.9	✓	✓	127	115		✓		✓
-37	131	119	3.1	✓	✓	132	118	Torque	✓	HIGH	✓
-38	132	118	2.6	✓	✓	136	125		✓		✓
-39	134	125	2.6	✓	✓	135	126		✓		✓
-40	124	112	2.7	✓	✓	137	127		✓		
-41	125	113	2.8	✓	✓	127	117		✓		
-42	116	106	2.7	✓	✓	130	117		✓		
-43	117	106	2.7	✓	✓	127	117		✓		
-44	120	101	2.7	✓	✓	131	125		✓		
-45	130	126	3.7	✓	✓	145	131		✓		
-46	124	114	2.4	✓	✓	130	120		✓		
-47	129	117	2.7	✓	✓	132	118		✓		
-48	116	107	2.7	✓	✓	127	120		✓		
-49	124	112	2.7	✓	✓	137	115	T-Cycle	✓	HIGH	✓
-50	132	121	2.9	✓	✓	135	127		✓		✓
-51	112	101	2.0	✓	✓	130	127		✓		✓
-52	137	121	2.6	✓	✓	136	125		✓		
-53	127	121	2.0	✓		139	130		✓		
-54	121	106	3.8	✓	✓	125	114		✓		
-55	128	115	3.0	✓	✓	127	119	Vacuum	✓		
-56	126	114	2.8	✓	✓	128	117		✓		
-57	127	117	2.7	✓		130	119		✓		
-58	122	111	3.2	✓	✓	130	126		✓		
-59	123	112	3.1	✓	✓	125	125		✓		
-60	131	117	3.4	✓		135	127		✓		
-61	127	119	3.8	✓		139	130	Vibrance	✓		
-62	127	117	3.7	✓		131	124		✓		
-63	128	113	3.6	✓	✓	128	125		✓		
-64	129	117	3.5	✓	✓	130	125		✓		
-65	121	112	3.8	✓	✓	136	118		✓		
-66	118	107	3.7	✓	✓	127	115		✓		
-67	132	123	2.9	✓	✓	139	132	Boost	Pass		
-68	126	117	3.9	✓	✓	139	132		Pass		
-69	129	125	2.7	✓	✓	130	124		Pass		
-70	119	109	3.9	✓	✓	139	130		Pass 7600		
-71	128	120	3.7	✓	✓	133	127		Pass		
-72	125	117	3.8	✓	✓	136	126		Pass		
-73	125	120	2.5	✓	✓	139	129	No Seal			
-74	124	118	2.4	✓	✓	128	120				
-75	119	112	3.4	✓	✓	126	117				
-76	117	107	3.4	✓	✓	121	114				
-77	120	109	3.1	✓	✓	126	118				
-78	111	101	3.4	✓	✓	125	113				
-79	117	105	3.9	✓	✓	127	117				
-80	131	124	2.7	✓	✓	136	130				

PRESSURE SWITCH DATA Form 21605 **TEST NO.** _____

DEVICE	DATE REQUESTED	REQUESTED BY	REQUESTED COMPL. DATE

PERFORMED BY	DATE STARTED	DATE COMPLETED	APPROVED BY

PROJECT TITLE:

CUSTOMER:

PURPOSE OF TEST:

PROCEDURE:

778563-1

Final Characterization

Device #	[illegible]	[illegible]	[illegible]	[illegible]	[illegible]	[illegible]
[illegible]	131	104	38.6	✓	✓	128-100
[illegible]	132	97	39.4	✓	✓	122-105
[illegible]	130	101	20.6	✓	✓	129-108
[illegible]	128	104	19.0	✓	✓	127-104
[illegible]	130	108	25.2	✓	✓	132-110
[illegible]	117	95	22.1	✓	✓	117-99
[illegible]	130	103	45.6	✓	✓	128-105
[illegible]	124	99	17.2	✓	✓	122-103
[illegible]	124	96	20.3	✓	✓	123-105
[illegible]	132	108	88.5	✓	✓	120-101
[illegible]	127	99	75.9	✓	✓	126-105
[illegible]	125	103	16.8	✓	✓	128-105
[illegible]	128	109	4.3	✓	✓	128-115
[illegible]	134	92	2.7	✓	✓	119-95
[illegible]	135	109	2.8	✓	✓	136-115
[illegible]	136	111	2.3	✓	✓	136-120
[illegible]	134	107	2.6	✓	✓	132-116
[illegible]	131	99	2.2	✓	✓	132-105
[illegible]	133	99	2.7	✓	✓	132-115
[illegible]	132	97	5.5	✓	✓	130-111
[illegible]	142	90	4.7	✓	✓	140-122
[illegible]	132	104	5.1	✓	✓	132-112
[illegible]	133	105	3.0	✓	✓	135-112
[illegible]	135	103	2.5	✓	✓	136-114
[illegible]	131	105	2.1	✓	✓	131 116
[illegible]	124	112	5.0	✓	✓	125 108
[illegible]	138	112	3.1	✓	✓	137 114
[illegible]	133	113	2.4	✓	✓	133 107

[illegible]	[illegible]	[illegible]	[illegible]	[illegible]	[illegible]	[illegible]			
[illegible]	[illegible]	2.7	✓	✓	[illegible]				
[illegible]	128 90	[illegible]	✓	✓	[illegible]				
[illegible]	132 [illegible]	2.9	✓	✓	130 112				
[illegible]	[illegible]	2.3	✓	✓	[illegible]				
[illegible]	[illegible]	6.6	✓	✓	130 [illegible]				
[illegible]	131 [illegible]	[illegible]	✓	✓	[illegible]				
[illegible]	[illegible]	2.9	✓	✓	[illegible]				
[illegible]	[illegible]	[illegible]	✓	✓	[illegible]				
[illegible]	125-112	3.6	✓	✓	123-102				
[illegible]	130-114	6.8	✓	✓	127-105				
[illegible]	126-112	9.7	✓	✓	126-108				
[illegible]	131-113	8.0	✓	✓	128-110				
[illegible]	125-111	7.2	✓	✓	122-106				
[illegible]	124-112	5.6	✓	✓	126-107				
[illegible]	127-113	5.9	✓	✓	124-108				
[illegible]	125-111	5.5	✓	✓	102-79				
[illegible]	138-123	7.7	✓	✓	135-115				
[illegible]	133-116	7.0	✓	✓	132-105				
[illegible]	131-117	8.0	✓	✓	127-105				
[illegible]	126-112	4.5	✓	✓	122-105				
[illegible]	127-98	8	✓	✓	126 98				
[illegible]	129-100	5.6	✓	✓	127 100				
[illegible]	126-108	2.6	✓	✓	127 98				
[illegible]	130-105	1.7	✓	✓	130 101				
[illegible]	130-102	2.8	✓	✓	128 102				
[illegible]	128-103	1.1	✓	✓	125 99				
[illegible]	138-117	1.3	✓	✓	135-100				
[illegible]	133-120	1.2	✓	✓	130-115				
[illegible]	136-123	1.2	✓	✓	134-108				
[illegible]	135-121	1.7	✓	✓	131-113				
[illegible]	130-118	2.7	✓	✓	127-114				
[illegible]	140-128	1.7	✓	✓	136-120				
[illegible]	134-117	1.5	✓	✓	134-120				
[illegible]	134-117	2.8	✓	✓	130-114				
[illegible]	137-115	2.6	✓	✓	135-106				
[illegible]	135-109	2.6	✓	✓	128-113				
[illegible]	132-107	2.8	✓	✓	130-104				
[illegible]	127-105	3.1	✓	✓	128-110				

Appendix 4.3
Noise Pressure Trace

TEST LOT NO.	TEST	DEVICE
TESTED BY		
APPROVED BY	TEXAS INSTRUMENTS — MATERIALS & CONTROLS GROUP, ATTLEBORO, MA 02703	DOC.
DATE 82-08-17		PAGE 38

FORM 5295

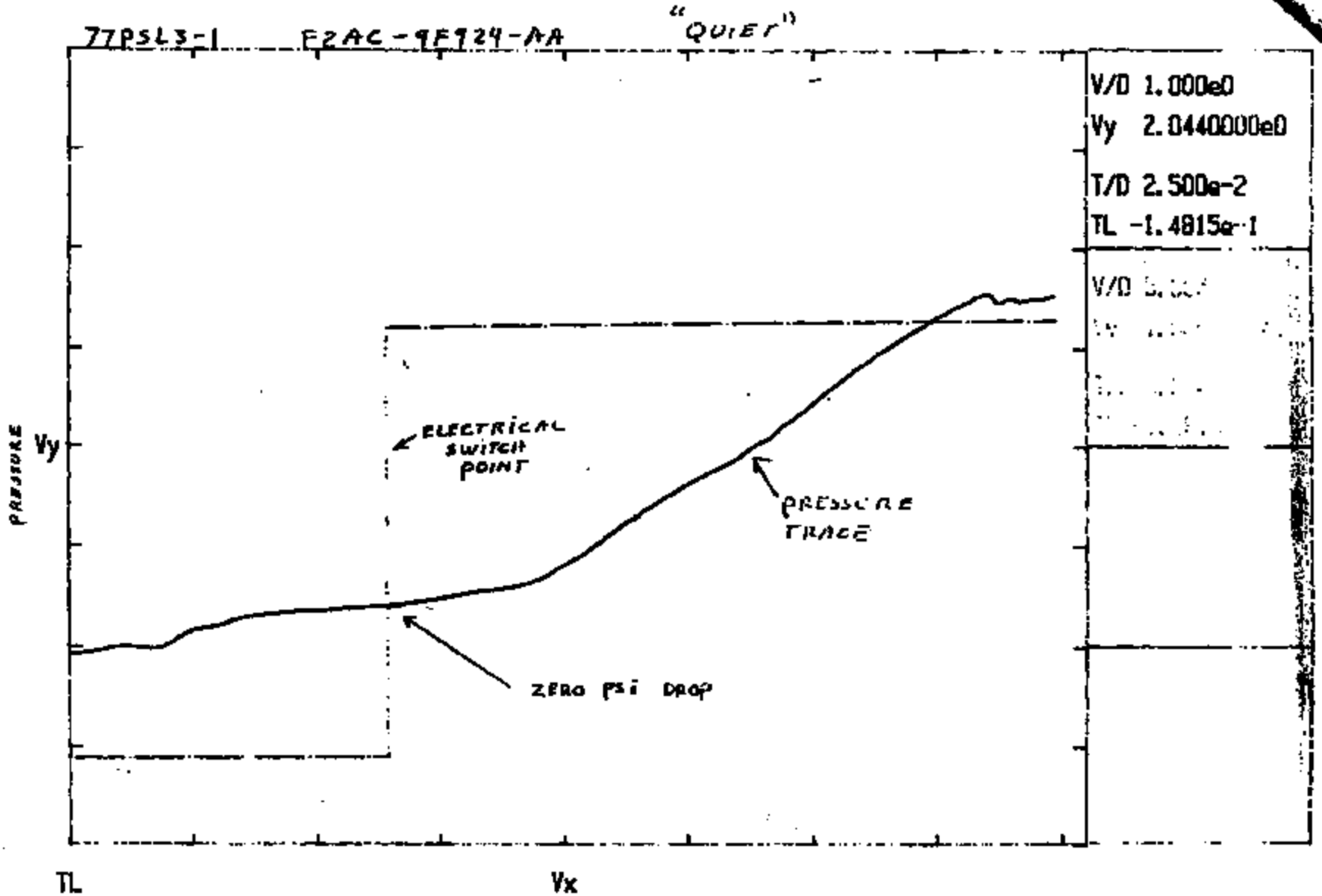
77PSL3-1
F2AC-9F924-AA
"QUIET"
V/D 1.000e0
Vy 2.0440000e0
T/D 2.500e-2
TL -1.4815e-1
PRESSURE
Vy
ELECTRICAL SWITCH POINT
PRESSURE TRACE
ZERO PSI DROP
TL
Vx

FIGURE 3

PIST/PIPC DATA (4 SETS)
Copies To: T.I. Q.A. office

> Mr. Frank Gabbert
Material Control Manager
B&A Pilot Plant
Ford Motor Co.
17000 Oakwood Blvd.
Allen Park, Mi. 48101

> SQI/SQA ENG.

> PIST/PIPC Coordinator
15002 Commerce Dr. South
Rotunda Court 1 Suite 114
Dearborn, Mi. 48120
ATTN: Leo Peyrakhovich

dims. meas'd 99
Cal. 2
101
~~300~~
Do Not ~~401~~
Include ~~300~~
P/C PIPC ~~701~~
Data per
Jim West 3-23-92

~~98 ÷ 101 = 97%~~
97 ÷ 101 = 96%

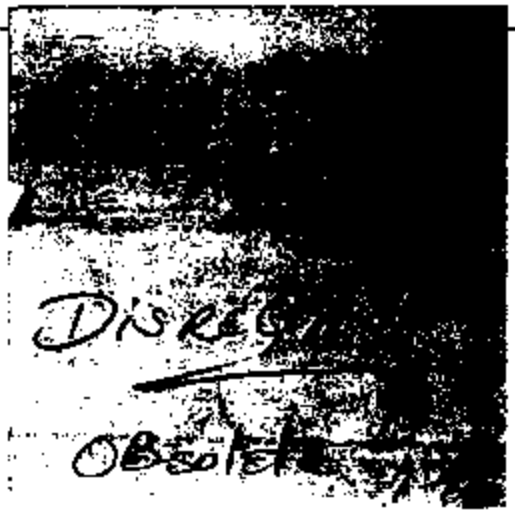

Change PIST

TEXAS INSTRUMENTS

MODIFIED ISIR SUBMISSION
- PROTOTYPE -

TO FORD MOTOR COMPANY
FOR PART NUMBER F58A-9F924-AA
(BUILD FOR VEHICLE # 34325)

MARCH 31, 1992

TEXAS INSTRUMENTS INCORPORATED • 34 FOREST STREET • ATTLEBORO, MA 02703
508-699-3800 • TELEX 210501 • CABLE TEXINS

MODIFIED

PROCESS POTENTIAL AND QUALITY INDEXES SUMMARY DATA SHEET

PART #: ▽ F58A-9F924-AA
SUPPLIER: Texas Instruments
CODE:
ADDRESS: 34 Forest St. 10-07 Attleboro, MA. 02703
VEHICLE BUILD: EP VP FB OTHER

SUPPLIER CONTACT: Jim Watt
CONTACT PHONE: 508 699-1719
PART DESCRIPTION: Next Generation Speed Control Deactivation Press. Sw.
SQA CODE:
VEHICLE PROGRAM: WIN 88

CHARACTERISTIC TYPE

▽ = FORD CRITICAL CHARACTERISTICS

S.C. = FORD OR SUPPLIER SIGNIFICANT CHARACTERISTICS

NUMBER OF CRITICAL AND SIGNIFICANT CHARACTERISTICS:

1: Actuation Pressure	TYPE: SC	Cp = * *	Cpk = * *
2: Release Pressure	TYPE: SC	Cp = * *	Cpk = * *
3: 3/8-24UNF-2A	TYPE: SC	Cp = A*	Cpk = A*
4:	TYPE:	Cp =	Cpk =
5:	TYPE:	Cp =	Cpk =
6:	TYPE:	Cp =	Cpk =
7:	TYPE:	Cp =	Cpk =
8:	TYPE:	Cp =	Cpk =
9:	TYPE:	Cp =	Cpk =
10:	TYPE:	Cp =	Cpk =
11:	TYPE:	Cp =	Cpk =
12:	TYPE:	Cp =	Cpk =
13:	TYPE:	Cp =	Cpk =
14:	TYPE:	Cp =	Cpk =
15:	TYPE:	Cp =	Cpk =

PIST = 97 ÷ 101 x 100 = 96 %

$PIPC_{Cp}$ = N/A x 100 = _____ % $PIPC_{Cpk}$ = N/A x 100 _____ %

COMMENTS:

** Calibration check is done mech

A* Threads are checked on a Go/NoGo Gage

PREPARED BY: Elaine Rose DATE: 3-23-92

-MSG M#= 261895 FR=JW02 TO=GAMY SENT=03/23/92 03:49 PM
R#=120 ST=C DIV=0050 CC=00149 BY=JW02 AT=03/23/92 03:49 PM

Memorandum

March 23, 1992

TO: James Frerichs JPF

CC:	Ed Smith	PCQA	Elaine Rose	GAMY
	Steve Offiler	SB01	Matt Sellers	PCME
	Bill Sweet	PCME	Norm Roy	MLDG
	Dave Czarn	ZARN	Andy McGuirk	PCQA

FM: Jim Watt JW02

SJ: 46515-1 Base Mold

A dimensional discrepancy on the 46515-1 base mold shows the 28 to 30 degree (continuous) measurement on the high side. This measurment was encountered on an ISIR report for our customer Ford.

Please review/perform an FAI on this dimension with all 4 cavities and submit the results to myself or Elaine Rose.
Please insure that each cavity is measured in four places.

We will need this data rather quickly as a customer response is pending.

Regards,

Jim ext. 1719 msg: JW02

MODIFIED

INITIAL SAMPLE WARRANT

No. 12390

PART INFORMATION

Part Name CRUISE CONTROL PRESSURE SWITCH -Quiet Sw. Part Number F5BA-9F924-AA

Control Item ☐ Yes ☒ No Engineering Change Level A Date 2-4-92

Engineering Change Authorization _____ Date _____

Shown on Drawing No. 77F813-2 Part Weight _____ kg

Reason for Initial Sample:

- ☒ Initial Submission
- ☐ Engineering Change(s)
- ☐ Tooling Transfer
- ☐ Other – Please Specify _____
- ☐ Change in Optional Construction or Material
- ☐ Additional, Replacement, or Refurbished Tooling
- ☐ Correction of Discrepancy (Resubmission No. _____)
- ☐ Process Change
- ☐ Change in Subcontractor or Source
- ☐ Parts Produced at Additional Location

SUPPLIER INFORMATION (Manufacturing Location)

Supplier Name Texas Instruments Incorporated Street Address 34 Forest St.

City Attleboro State MA Postal Code 02703 Country USA

Supplier Mfg. Location Code – DUNS _____ Customer Assigned _____

CUSTOMER INFORMATION

Customer Name Ford Motor Co.-N.A.A.O Buyer Fred Hendershot Buyer Code 165

Purchase Order Number 47-1-P42042 Sample Acceptance Level KP

Application Next Generation Speed Control Deactivation Pressure Switch

RESULTS

The results for dimensional measurements ☐, material tests ☐, and functional (GS) tests ☐ meet all drawing and specification requirements ☐ Yes ☒ No

Submission Checklist

- ☒ Checked Print
- ☐ Auxiliary Drawings/Sketches
- ☒ Correct Number of Samples
- ☒ Dimensional Results
- ☐ Material Test Results
- ☐ Certifications
- ☒ Functional (GS) Test Results
- ☐ Product Engineering Approval
- ☐ Control Plan
- ☐ Process Capability Reports
- ☐ Process Flow Diagram
- ☐ Gage (Measurement) Studies

Supporting data for all requirements are available upon request.

COMMENTS:

For EP Build

DECLARATION

I affirm that the samples represented by this warrant are representative of our parts and have been made to the applicable customer drawings and specifications from specified materials, on regular production tooling with no operations other than the regular production process.

Authorized Signature _____ Date _____

Print Name _____ Title _____ Phone No. _____

APPROVAL (when required by customer procedure) ☐ Approved ☐ Rejected

Signature _____ Date _____

292c

MODIFIED

Initial Sample Report – Dimensional

FORM 292a MUST ALSO BE SUBMITTED

PROJECT NO. XI 2 390

PRODUCER: Texas Instruments, Inc.

PART NUMBER: ▽F58A-9F924-AA

PART NAME: NEXT GENERATION Speed Control Deactivation Pressure Switch

ITEM	DRAWING SPECIFICATION		PRODUCER MEASUREMENT RESULTS	OK	NOT OK
1	13.43 - 13.85		13.756		
2	31° ± 2°		29° 35'		
3	ø 19.05 max		x 18.431 y 18.603		
4	0.05 - 0.26 2 places		.190 .155		
5	0.50 ± 0.25		.477 .673		
6	2.79 - 3.10 2 places		2.92 2.91		
7	19.45 - 19.81		19.67		
8	16.56 - 16.76		16.581		
9	12.80 - 13.21		12.967		
10	11.40 - 11.90		11.784		
11	2.84 - 3.05		2.934		
	⊕ 0.1 Ⓢ A		.863		
12	1.24 - 1.45		1.331		
13	11.60 - 11.92		11.715		
14	1.24 - 1.55		1.382		
15	1.85 - 2.06		1.934		
16	29° ± 2° 4 places		31°2' 31°16' 30°40' 28°22'		✓
17	6.60 - 6.81		6.665		
18	NO FLASH OR BURRS		OK		
19	7.23 - 7.75		7.550		
20	2.79 - 3.41		3.144		
21	0.68 - 1.30		1.159		
22	DATE CODE AND FORD P/N		OK		

Form 292a

V – CONTROL ITEM

MODIFIED

Initial Sample Report – Dimensional

FORM 292a MUST ALSO BE SUBMITTED

PRODUCER

PART NUMBER: ▽ F58A-9E924-AA

PART NAME

ITEM	DIMENSION SPECIFICATION		PRODUCER MEASUREMENT RESULTS	OK	NOT OK
23	0.25 min x 40°-50° chamfer		.495 55° 40'		✓
24	3/8 - 24UNF-2A	SC	OK		
25	1.10 - 1.40		1.286 sectioned part		
26	25 ▽ C		0.15 ▽ sectioned part		
27	↗ 0.16 D		.03		
28	41° - 43°		42° 42'		
29	40° - 50°		44° 52'		
30	Ø 7.82 - 8.03		x 7.980 y 8.016		
31	1.52 - 2.04		1.760		
32	9.39 - 9.66		9.618		
33	8.12 min.		9.148		
34	14.23 max		13.64		
35	57.15 max		55.76		
36	12.59 - 13.11		12.737		
37	11.65 - 12.17		x 11.935 y 11.928		
38	1.80-2.21 radius 2 places		1.900 1.800		
39	Ø 32.51 max		x 31.510 Y 31.168		
40	Ø 14.02 - 14.53 dia		14.19 / 14.22		
41	Ø 3.30 - 3.60		x 3.490 y 3.415		
42	Ø 7.23 - 7.37		7.37		
43	5.85 - 5.58	SC	x 5.632 y 5.627		
44	13° - 19° 2 places		14° 0' / 17° 5' 13° 2' / 18° 18'		
45	0.66 - 0.87 2 places		.682 .783		
46	0.10 - 0.31 2 places		.268 .247		

FTR 292a

▽ – CONTROL ITEM

MODIFIED

Initial Sample Report – Dimensional

FORM 292a MUST ALSO BE SUBMITTED

PRODUCER

PART NUMBER: ▽ F58A-9F924-AA

PART NAME

ITEM	DIMENSION/SPECIFICATION			PRODUCER MEASUREMENT RESULTS	OK	NOT OK
47	0.58 - 0.68	2 places		.648 .638		
48	2.59 - 2.80	2 places		2.636 2.636		
	Ⓜ 0.25 Ⓜ A			.072 .139		
49	0.35 - 0.66	4 places		.527 .473 .553 .538		
50	0.86 - 1.17	4 places		.947 .995 1.018 .965		
51	45° ± 2°	4 places		45°0' 46°3' 45°2' 45°25'		
52	8.30 - 8.72	2 places		8.503 8.506		
53	2.15 - 2.42	2 places		2.164 2.217		
54	25° ± 2°	2 places		23°30' 23°37'		
55	Housing to be Gray in Color			GRAY		
56	(71.5°)	2 places		72°7' 72°40'		
57	1.42 - 1.63	2 places		1.529 1.470		
58	0.35 - 0.66	4 places		.569 .551 .554 .546		
59	ACT. PRESS. 125 ± 35 PSIG		SC	172 PSIG		✓
60	REL. PRESS. 20 min. PSIG		SC	152 PSIG		

Quality Form 292a

▽ – CONTROL ITEM

DRAWINGS AVAILABLE UPON REQUEST

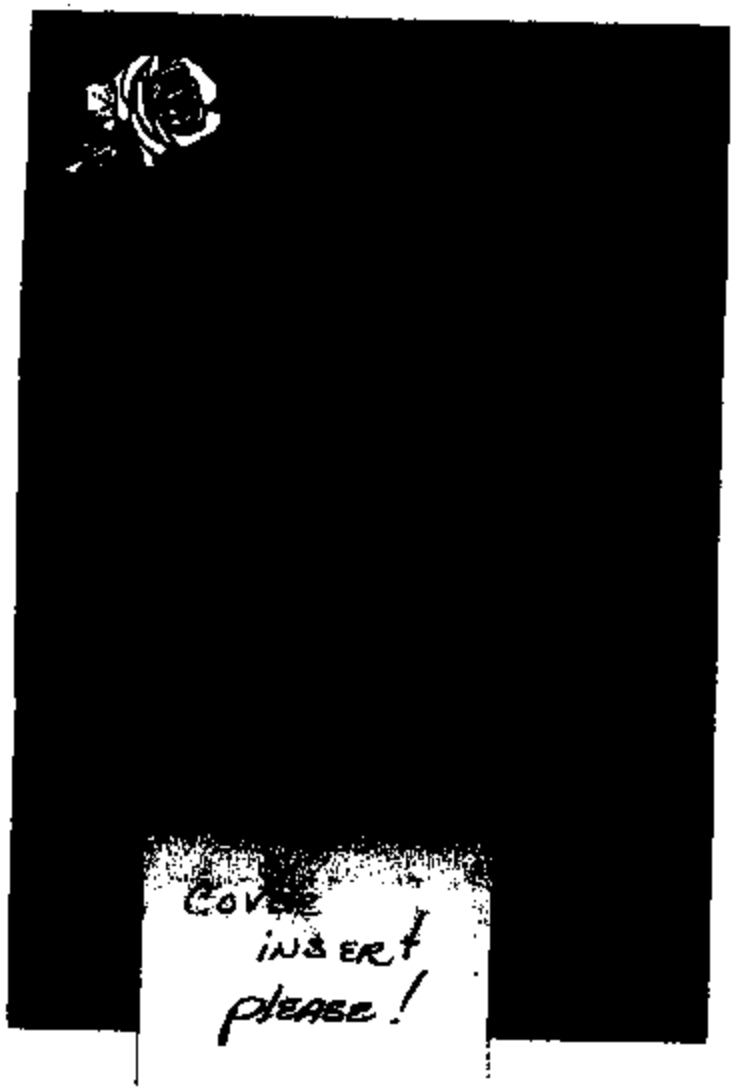
Cover
insert
please!