EA02025

TEXAS INSTRUMENTS, INC.'S

9/10/03 ATTACHMENT TO ODI

BOX 4, PARTS A - N

PART F

TEXAS INSTRUMENTS

DIMENSIONAL ANALYSIS ON PART NUMBER

F2AC-9F924-AA

ENVELOPE DIMENSIONS TO BASE ONLY

	BLUEPRINT SPEC	CAVITY # A ACTUAL	CAVITY # B ACTUAL	CAVITY # C ACTUAL	CAVITY # D ACTUAL
1	11.40 - 11.90	11.806	11.817	11.817	11.794
2	12.80 - 13.21	13.043	13.043	13.072	13.094
3	16.56 - 16.76	16.638	16.652	16.671	16.673
		16.661	----	16.680	16.668
4	19.45 - 19.81	19.752	19.754	19.787	19.799
5	2.80 - 3.05	2.930	2.93	2.944	2.951
	0.1 s A	1.897 0.003	1.923 0.023	1.945 0.045	1.885 0.015
6	31DEG +/- 2DEG	29DEG 29MIN	29DEG 38MIN	29DEG 58MIN	29DEG 34MIN
7	1.85 - 2.06	1.927	1.966	1.969	1.978
8	1.24 - 1.55	1.365	1.387	1.423	1.400
9	1.24 - 1.45	1.269	1.268	1.275	1.308
10	11.60 - 11.92	11.768	11.768	11.753	11.777
		11.729	11.740	11.789	11.747
11	13.43 - 13.85	13.010	13.769	13.786	13.647
12	0.25 - 0.75	0.490 0.475	0.519 0.523	0.573 0.635	0.618 0.593
13	2.79 - 3.10	2.900	2.909	2.912	2.908
	2 PL	2.903	2.915	2.913	2.911

TEXAS INSTRUMENTS INCORPORATED • 34 FOREST STREET • ATTLEBORO, MA 02703
508-699-3600 • TELEX 95-7705 TWX 710-348-0688 • CABLE TEXINS

DRAWINGS AVAILABLE UPON REQUEST

TEXAS INSTRUMENTS

DIMENSIONAL ANALYSIS ON PART NUMBER

F2AC-9F924-AA

	BLUEPRINT SPEC	CAVITY # A ACTUAL	CAVITY # B ACTUAL	CAVITY # C ACTUAL	CAVITY # D ACTUAL
14	0.05 - 0.26	0.151	0.153	0.124	0.076
	2 PL	0.113	0.142	0.163	0.147
15	19.05 MAX	18.667	18.709	18.671	18.704
		18.701	18.748	18.565	18.757
16	12.59 - 13.11	12.800	12.829	12.802	12.819
		12.829	12.800	12.842	12.824
17	0.68 - 1.30	1.085	1.105	1.122	1.175
18	2.79 - 3.41	3.076	3.0612	3.152	3.109
19	7.23 - 7.75	7.579	7.501	7.514	7.545
20	6.60 - 6.91	6.701	6.673	6.715	6.677
21	29DEG +/- 2DEG	MEASURED	29DEG 24MIN	ON CROSS	SECTIONED
	4 X	PART	30DEG 06MIN	----	----
		----	29DEG 58MIN	----	----
		----	29DEG 47MIN	----	----
22	NO FLASH/BURRS	SLIGHT	FLASH ON	EDGES	@ 10X

TEXAS INSTRUMENTS INCORPORATED • 34 FOREST STREET • ATTLEBORO, MA 02703
508-699-6600 • TELEX 94-7709 TWX 710-349-6595 • CABLE TEXINS

TEXAS INSTRUMENTS

DIMENSIONAL ANALYSIS ON PART NUMBER

F2AC-9F924-AA

	BLUEPRINT SPEC	CAVITY # A ACTUAL	CAVITY # B ACTUAL	CAVITY # C ACTUAL	CAVITY # D ACTUAL
23	8.30-8.72 2X	8.535	8.553	8.484	8.578
		8.726	8.512	8.570	8.519
24	2.15-2.42 2X	2.162	2.171	2.282	2.271
		2.212	2.236	2.297	----
25	25DEG +/- 20DEG	24DEG 25MIN	24DEG 56MIN	24DEG 47MIN	24DEG 06MIN
	2 X	24DEG 10MIN	24DEG 14MIN	24DEG 06MIN	24DEG 43MIN
26	45DEG +/- 2DEG	46DEG 10MIN	42DEG 44MIN	43DEG 44MIN	45DEG 03MIN
	4PL	44DEG 35MIN	43DEG 47MIN	44DEG 47MIN	45DEG 01MIN
		45DEG 22MIN	44DEG 47MIN	45DEG 49MIN	46DEG 11MIN
		44DEG 08MIN	45DEG 37MIN	46DEG 38MIN	43DEG 50MIN
27	(71.5DEG) 2X	72DEG --	71DEG 31MIN	71DEG 20MIN	72DEG 01MIN
		71DEG 07MIN	72DEG --	72DEG 10MIN	71DEG 12MIN
28	1.42-1.63 2X	1.538	1.538	1.582	1.603
		1.539	1.612	1.602	1.596
29	0.35-0.66 4X	0.546 0.547	0.570 0.590	0.598 0.580	0.581 0.556
		0.592 0.614	0.561 0.574	0.576 0.603	0.558 0.575
30	0.35-0.66 4X	0.501 0.471	0.467 0.502	0.459 0.520	0.477 0.443
		0.378 0.417	0.320 0.344	0.357 0.382	0.338 0.398
		0.493 0.506	0.494 0.539	0.436 0.482	0.486 0.518
		0.382 0.395	0.450 0.484	0.384 0.393	0.373 0.409

TEXAS INSTRUMENTS INCORPORATED • 34 FOREST STREET • ATTLEBORO, MA 02703
508-699-8800 • TELEX 93-7703 TWX 710-346-0888 • CABLE TEXINS

TEXAS INSTRUMENTS

DIMENSIONAL ANALYSIS ON PART NUMBER

F2AC-9F924-AA

	BLUEPRINT SPEC	CAVITY # A ACTUAL	CAVITY # B ACTUAL	CAVITY # C ACTUAL	CAVITY # D ACTUAL
31	0.86 - 1.17	1.023	1.012	1.026	1.021
	4 X	0.985	0.998	0.988	1.041
		1.023	0.992	1.026	1.014
		0.976	0.978	0.991	0.984
32	TERM.HOUSING	BLACK ONLY	AVAILABLE	TO QUALIFY	MOLD
	NATURAL				

TEXAS INSTRUMENTS INCORPORATED • 34 FORREST STREET • ATTLEBORO, MA 02703
508-699-8800 • TELEX 95-7705 TWX 710-348-6808 • CABLE TEXINS

DRAWINGS AVAILABLE UPON REQUEST

PIPC/ PIST DATA

TI-NHTSA 005790

PROCESS POTENTIAL AND QUALITY INDEXES SUMMARY DATA SHEET

PART #: F2FC-9F924-AB
SUPPLIER: Texas Instruments
CODE: T097K
ADDRESS: 34 Forest St.
Attleboro, MA 02703
VEHICLE BUILD: EP VP FB OTHER

SUPPLIER CONTACT: Jim Hatr
CONTACT PHONE: 1-508-699-1718
PART DESCRIPTION: Next Generation Speed Control
SQA CODE: (Mark Scholler)
VEHICLE PROGRAM: Pony Car

CHARACTERISTIC TYPE

∇ = FORD CRITICAL CHARACTERISTICS

S.C. = FORD OR SUPPLIER SIGNIFICANT CHARACTERISTICS

NUMBER OF CRITICAL AND SIGNIFICANT CHARACTERISTICS:

1: Actuation Pressure	TYPE: SC	Cp = **	Cpk = **
2: Release Pressure	TYPE: SC	Cp = **	Cpk = **
3: 3/8-24UNF-2A Thread	TYPE: SC	Cp = A*	Cpk = A*
4:	TYPE:	Cp =	Cpk =
5:	TYPE:	Cp =	Cpk =
6:	TYPE:	Cp =	Cpk =
7:	TYPE:	Cp =	Cpk =
8:	TYPE:	Cp =	Cpk =
9:	TYPE:	Cp =	Cpk =
10:	TYPE:	Cp =	Cpk =
11:	TYPE:	Cp =	Cpk =
12:	TYPE:	Cp =	Cpk =
13:	TYPE:	Cp =	Cpk =
14:	TYPE:	Cp =	Cpk =
15:	TYPE:	Cp =	Cpk =

PIST = 1265/1265 x 100 = 100 %

$PIPC_{Cp}$ = N/A x 100 = _____ % $PIPC_{Cpk}$ = N/A x 100 _____ %

COMMENTS:

** Calibration check is done 100 percent. parts tested 500; defective 0 percent or defect 0.

A* threads are checked on a go/no-go gage.

PREPARED BY:

Elaine Ross DATE: 12/20/91

DRAWINGS AVAILABLE UPON REQUEST

TI-NHTSA 005794

M GAGE STUDY FOR REPEATABILITY AND REPRODUCIBILITY (LONG METHOD
-Feb-92
//PG PRESSURE TESTER
ACTUATION

NUMBER OF OPERATORS	3	MIN SPEC	90
NUMBER OF PARTS	4	MAX SPEC	160
NUMBER OF TRIALS	2	TOLERANCE	70

DATA SUMMARY

OPERATOR	AVERAGE	RANGE
1	104.325	0.25
2	103.7	0.35
3	104.15	0.5
4	NA	NA
5	NA	NA
6	NA	NA
7	NA	NA
8	NA	NA
9	NA	NA
10	NA	NA
AVERAGE	104.0583	0.366666

MIN XBAR	103.7
MAX XBAR	104.325
XBARDIFF	0.625

	MEASUREMENT UNIT ANALYSIS	%TOLERANCE
REPEATABILITY:	1.674054	2.39%
REPRODUCIBILITY:	1.577654	2.25%
RPT & REPR (R&R):	2.300452	3.29%

NOTE: ALL CALCULATIONS BASED ON 5.15 SIGMA (99%)

TER STUDY TITLES IN CELLS A8.A9.A10. MIN/MAX SPEC IN B12. B13
//PS PRESSURE TESTER
ACTUATION

MIN SPEC 90
MAX SPEC 160
TOLERANCE 70

DATA FOR OPERATOR 1

PART	TRIAL 1	2	3	4	5	AVG	RANGE
1	107.3	106.8				107.05	0.5
2	106.7	106.8				106.75	0.1
3	102.9	102.5				102.7	0.4
4	100.8	100.8				100.8	0
5						NA	0
6						NA	0
7						NA	0
8						NA	0
9						NA	0
10						NA	0
11						NA	0
12						NA	0
13						NA	0
14						NA	0
15						NA	0
16						NA	0
17						NA	0
18						NA	0
19						NA	0
20						NA	0
21						NA	0
22						NA	0
23						NA	0
24						NA	0
25						NA	0

GRND AVG: 104.325 AVG RNGE: 0.25
UCL FOR INDIVIDUAL RANGES 1.1979

DATA FOR OPERATOR 2

PART	TRIAL 1	2	3	4	5	AVG	RANGE
1	105.6	105.5				105.55	0.1
2	106.3	106.3				106.3	0
3	103.1	102.1				102.6	1
4	100.5	100.2				100.35	0.3
5						NA	0
6						NA	0
7						NA	0
8						NA	0
9						NA	0
10						NA	0
11						NA	0
12						NA	0
13						NA	0
14						NA	0
15						NA	0
16						NA	0
17						NA	0
18						NA	0
19						NA	0
20						NA	0
21						NA	0
22						NA	0
23						NA	0
24						NA	0
25						NA	0

GRND AVG: 103.7 AVG RNGE: 0.35
UCL FOR INDIVIDUAL RANGES 1.1979

TA FOR OPERATOR 3

PART	TRIAL 1	2	3	4	5	AVG	RANGE
1	104.4	104.4				104.4	0
2	108.4	107.6				108	0.8
3	103	101.8				102.4	1.2
4	101.8	101.8				101.8	0
5						NA	0
6						NA	0
7						NA	0
8						NA	0
9						NA	0
10						NA	0
11						NA	0
12						NA	0
13						NA	0
14						NA	0
15						NA	0
16						NA	0
17						NA	0
18						NA	0
19						NA	0
20						NA	0
21						NA	0
22						NA	0
23						NA	0
24						NA	0
25						NA	0

GRND AVG: 104.15 AVG RNGE: 0.5
UCL FOR INDIVIDUAL RANGES 1.1979

GAGE STUDY FOR REPEATABILITY AND REPRODUCIBILITY (LONG METHOD
-Feb-92
PS PRESSURE TESTER
RELEASE

NUMBER OF OPERATORS	3	MIN SPEC	20
NUMBER OF PARTS	4	MAX SPEC	120
NUMBER OF TRIALS	2	TOLERANCE	100

DATA SUMMARY

OPERATOR	AVERAGE	RANGE
1	46.075	0.5
2	45.2625	0.775
3	45.825	0.15
4	NA	NA
5	NA	NA
6	NA	NA
7	NA	NA
8	NA	NA
9	NA	NA
10	NA	NA
AVERAGE	45.72083	0.475

N XBAR 45.2625
X XBAR 46.075
XBARDIFF 0.8125

	MEASUREMENT UNIT ANALYSIS	%TOLERANCE
REPEATABILITY:	2.168661	2.17%
REPRODUCIBILITY:	2.052217	2.05%
RPT & REPR (R&R):	2.985747	2.99%

NOTE: ALL CALCULATIONS BASED ON 5.15 SIGMA (99%)

TER STUDY TITLES IN CELLS A8.A9.A10. MIN/MAX SPEC IN B12.'B13
77PS PRESSURE TESTER
RELEASE

MIN SPEC 20
MAX SPEC 120
TOLERANCE 100

DATA FOR OPERATOR 1

PART	TRIAL 1	2	3	4	5	AVG	RANGE
1	44.1	43.8				43.95	0.3
2	50.5	50.1				50.3	0.4
3	48.7	48.4				48.55	0.3
4	42	41				41.5	1
5						NA	0
6						NA	0
7						NA	0
8						NA	0
9						NA	0
10						NA	0
11						NA	0
12						NA	0
13						NA	0
14						NA	0
15						NA	0
16						NA	0
17						NA	0
18						NA	0
19						NA	0
20						NA	0
21						NA	0
22						NA	0
23						NA	0
24						NA	0
25						NA	0

GRND AVG: 46.075 AVG RNGE: 0.5
UCL FOR INDIVIDUAL RANGES 1.551625

ATA FOR OPERATOR 2

PART	TRIAL 1	2	3	4	5	AVG	RANGE
1	43.7	43.2				43.45	0.5
2	49.4	47.6				48.5	1.8
3	48.8	48.2				48.5	0.6
4	40.7	40.5				40.6	0.2
5						NA	0
6						NA	0
7						NA	0
8						NA	0
9						NA	0
10						NA	0
11						NA	0
12						NA	0
13						NA	0
14						NA	0
15						NA	0
16						NA	0
17						NA	0
18						NA	0
19						NA	0
20						NA	0
21						NA	0
22						NA	0
23						NA	0
24						NA	0
25						NA	0

GRND AVG: 45.2625 AVG RNGE: 0.775
UCL FOR INDIVIDUAL RANGES 1.551825

TA FOR OPERATOR 3

PART	TRIAL 1	2	3	4	5	AVG	RANGE
1	42.6	42.5				42.55	0.1
2	50.7	50.4				50.55	0.3
3	48.8	48.7				48.75	0.1
4	41.5	41.4				41.45	0.1
5						NA	0
6						NA	0
7						NA	0
8						NA	0
9						NA	0
10						NA	0
11						NA	0
12						NA	0
13						NA	0
14						NA	0
15						NA	0
16						NA	0
17						NA	0
18						NA	0
19						NA	0
20						NA	0
21						NA	0
22						NA	0
23						NA	0
24						NA	0
25						NA	0

GRND AVG: 45.625 AVG RNGE: 0.15
UCL FOR INDIVIDUAL RANGES 1.551825

GAGE STUDY FOR REPEATABILITY AND REPRODUCIBILITY (LONG METHOD

DIAL INDICATOR
GAGE # 16070
"TIPS

NUMBER OF OPERATORS	2	MIN SPEC	0.459
NUMBER OF PARTS	10	MAX SPEC	0.479
NUMBER OF TRIALS	2	TOLERANCE	0.02

DATA SUMMARY

OPERATOR	AVERAGE	RANGE
1	0.470705	0.00019
2	0.470625	0.00063
3	NA	NA
4	NA	NA
5	NA	NA
6	NA	NA
7	NA	NA
8	NA	NA
9	NA	NA
10	NA	NA
AVERAGE	0.470665	0.00041

MIN XBAR 0.470625
MAX XBAR 0.470705
XBARDIFF 0.00008

	MEASUREMENT UNIT ANALYSIS	%TOLERANCE
REPEATABILITY:	0.001871	9.36%
REPRODUCIBILITY:	0	0.00%
RPT & REPR (R&R):	0.001871	9.36%

NOTE: ALL CALCULATIONS BASED ON 5.15 SIGMA (99%)

ER STUDY TITLES IN CELLS A8.A9.A10. MIN/MAX SPEC IN B12. B13
DIAL INDICATOR
GAGE # 16070

MIN SPEC 0.459
MAX SPEC 0.479
TOLERANCE 0.02

DATA FOR OPERATOR 1

PART	TRIAL 1	2	3	4	5	AVG	RANGE
1	0.4693	0.4694				0.46935	0.0001
2	0.4697	0.4696				0.46965	0.0001
3	0.471	0.4715				0.47125	0.0005
4	0.4718	0.4718				0.4718	0
5	0.472	0.472				0.472	0
6	0.4715	0.4716				0.47155	0.0001
7	0.4707	0.471				0.47085	0.0003
8	0.4694	0.4693				0.46935	0.0001
9	0.4718	0.4713				0.47155	0.0005
10	0.4696	0.4698				0.4697	0.0002
11						NA	0
12						NA	0
13						NA	0
14						NA	0
15						NA	0
16						NA	0
17						NA	0
18						NA	0
19						NA	0
20						NA	0
21						NA	0
22						NA	0
23						NA	0
24						NA	0
25						NA	0

GRND AVG: 0.470705 AVG RNGE: 0.00019
UCL FOR INDIVIDUAL RANGES 0.001339

TA FOR OPERATOR 2

PART	TRIAL 1	2	3	4	5	AVG	RANGE
1	0.4695	0.4696				0.46955	0.0001
2	0.4693	0.4698				0.46955	0.0005
3	0.4718	0.4709				0.47135	0.0009
4	0.4719	0.4706				0.47125	0.0013
5	0.4715	0.4719				0.47165	0.0003
6	0.4715	0.4717				0.4716	0.0002
7	0.471	0.4715				0.47125	0.0005
8	0.4705	0.4716				0.47105	0.0011
9	0.4694	0.4702				0.4698	0.0008
10	0.4689	0.4695				0.4692	0.0006
11						NA	0
12						NA	0
13						NA	0
14						NA	0
15						NA	0
16						NA	0
17						NA	0
18						NA	0
19						NA	0
20						NA	0
21						NA	0
22						NA	0
23						NA	0
24						NA	0
25						NA	0

GRND AVG:0.470625 AVG RNGE: 0.00063
UCL FOR INDIVIDUAL RANGES 0.001339

PROCESS FLOW &
CONTROL PLAN

TI-NHTSA 005809

FORD NEXT GENERATION SPEED CONTROL

PROCESS FLOW CHART 77PSL2-1/2-3

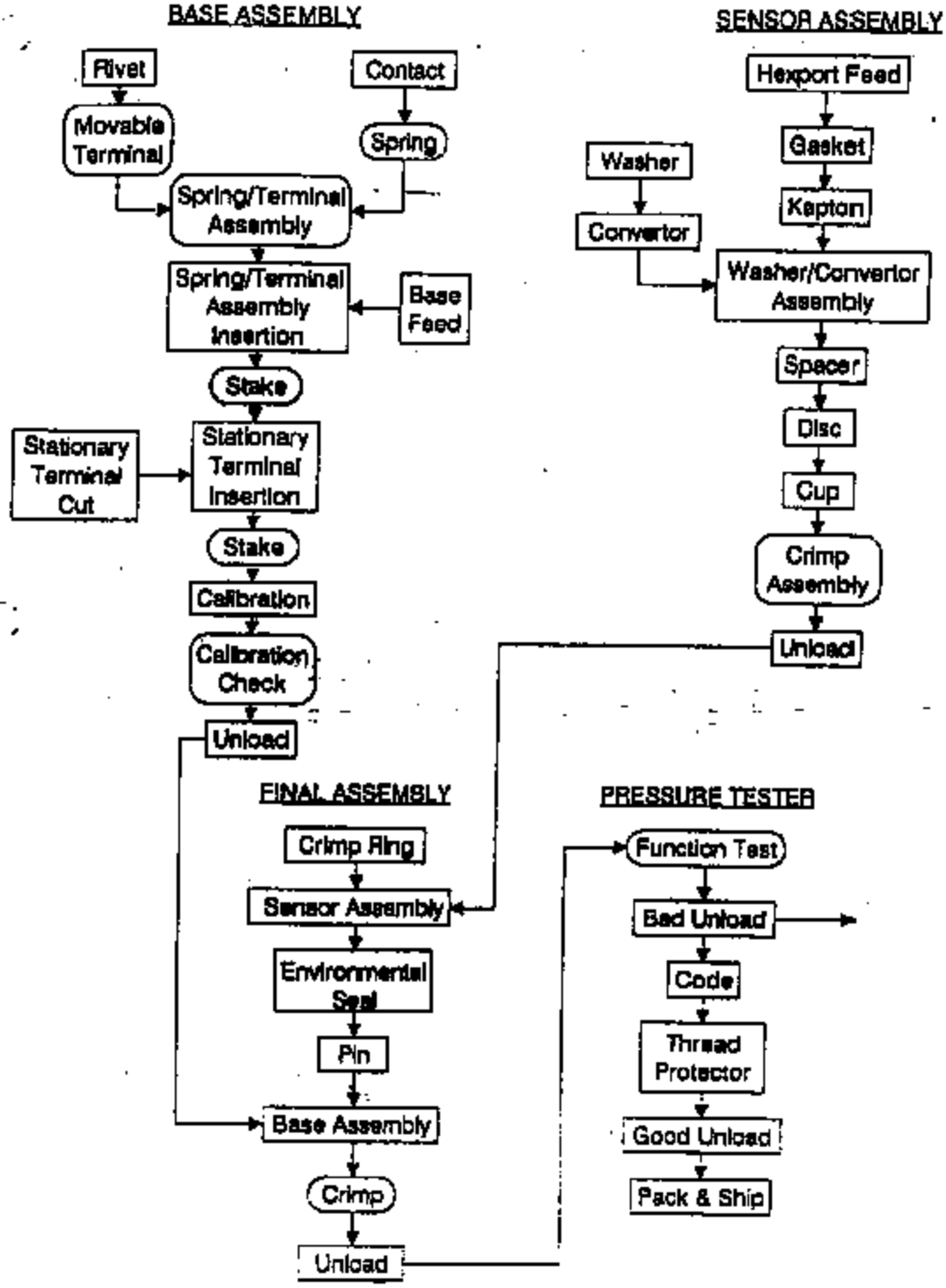

SPC Operation

Standard Operation

FORD NEXT GENERATION SPEED CONTROL (77PS)
MANUFACTURING CONTROL PLAN
77PSL QUIET SWITCH

PROCESS STEP DESCRIPTION	PRODUCT CHARACTERISTICS	EVALUATION METHOD	CONTROL METHOD	FREQUENCY OF TEST	REACTION PLAN
BASE ASSEMBLY (AMI AUTOMATION)	TERMINAL HEIGHT	DIAL INDICATOR	X/ R	5pc/ Hr.	SORT SINCE LAST CHECK
	TERMINAL PUSHOUT	FORCE GAGE/ DIAL INDICATOR	X/ R	5pc/ Hr.	SORT SINCE LAST CHECK
	TERMINAL SEPERATION/ ALIGNMENT	PLUG GAGE	X/ R	5pc/ Hr.	SORT SINCE LAST CHECK
	SPRING ANGLE	COMPARATOR	X/ R	5pc/ Hr.	SORT SINCE LAST CHECK
	SPRING CONTACT WIDTH	CALIPERS	X/ R	5pc/ Hr.	SORT SINCE LAST CHECK
	SPRING TORQUE	FORCE GAGE	X/ R	5pc/ Hr.	SORT SINCE LAST CHECK
	SPRING BUMP HEIGHT	CALIPERS	X/ R	5pc/ Hr.	SORT SINCE LAST CHECK
	RIVET HEIGHT	DIAL INDICATOR	X/ R	5Pc/ Hr.	SORT SINCE LAST CHECK
	CALIBRATION DEFORMATION	CUSTOM CONTINUITY SYSTEM	X/ R	5pc/ Hr.	SORT SINCE LAST CHECK
	VISUAL QUALITY	VISUAL	X/ R	5pc/ Hr.	SORT SINCE LAST CHECK
SENSOR ASSEMBLY	CRIMP DIAMETER	CALIPERS	X/ R	5pc/ Hr.	SORT SINCE LAST CHECK
	CRIMP HEIGHT	CALIPERS	X/ R	5pc/ Hr.	SORT SINCE LAST CHECK
	VISUAL QUALITY	VISUAL	P	5pc/ Hr.	SORT SINCE LAST CHECK

Revision: A

11 April 1992 MJ/Jmjb 050-0134

TI-NHTSA 005808

FORD NEXT GENERATION SPEED CONTROL (77P3)
MANUFACTURING CONTROL PLAN
77PSL QUIET SWITCH

PROCESS STEP DESCRIPTION	PRODUCT CHARACTERISTICS	EVALUATION METHOD	CONTROL METHOD	FREQUENCY OF TEST	REACTION PLAN
FINAL ASSEMBLY (AMI AUTOMATION)	CRIMP DIAMETER	CALIPER	X/R	5pc/Hr.	SORT SINCE LAST CHECK
	CRIMP HEIGHT	CALIPER	X/R	5pc/Hr.	SORT SINCE LAST CHECK
	BASE TORQUE	TORQUE GAGE	X/R	5pc/Hr.	SORT SINCE LAST CHECK
	CODE CRIMP RING/ DIAMETER-LEGIBILITY	PLUG-VISUAL	P	5pc/Hr.	SORT SINCE LAST CHECK
*	PIN HEIGHT	DIAL INDICATOR	X/R	5pc/Hr.	SEPARATE FAILED LOT. PRODUCT TEAM REVIEW.
FUNCTION TESTER (CUSTOM)	ACTUATION/RELEASE POINTS (Ford Significant Char.)	MASTERS	X/R	EACH SHIFT	TOOL ROOM/ ENGINEERING EVALUATIONS
	ACTUATION/RELEASE POINTS	RAMP THROUGH PRESSURE RANGE	X/R	100%	YIELD TRACKING/ SCRAP CONTROL
PRODUCT AUDITS * (PRODUCTION)	HIGH PINNING	CUSTOM HYPOT SYSTEM/	P	100%	SEPARATE FAILED LOT. PRODUCT TEAM REVIEW.
*	HIGH TEMP CONTINUITY	OVEN/ CONTINUITY METER	P	10pc/Lot	SEPARATE FAILED LOT. PRODUCT TEAM REVIEW.
Q.C. AUDITS	OUTLINED IN DETAIL IN TEXAS INSTRUMENTS (QAS 208), FMC				

Revision: A

11 April 1992 MJ/kaja 050-6134

TI-NHTSA 005810

[redacted]																		
[redacted]	[redacted]	[redacted]	[redacted]	[redacted]	[redacted]	[redacted]	[redacted]	[redacted]	[redacted]	[redacted]	[redacted]	[redacted]	[redacted]	[redacted]	[redacted]	[redacted]	[redacted]	[redacted]
[redacted]	[redacted]	[redacted]	[redacted]	[redacted]	[redacted]	[redacted]	[redacted]	[redacted]	[redacted]	[redacted]	[redacted]	[redacted]	[redacted]	[redacted]	[redacted]	[redacted]	[redacted]	[redacted]
[redacted]	[redacted]	[redacted]	[redacted]	[redacted]	[redacted]	[redacted]	[redacted]	[redacted]	[redacted]	[redacted]	[redacted]	[redacted]	[redacted]	[redacted]	[redacted]	[redacted]	[redacted]	[redacted]
[redacted]	[redacted]	[redacted]	[redacted]	[redacted]	[redacted]	[redacted]	[redacted]	[redacted]	[redacted]	[redacted]	[redacted]	[redacted]	[redacted]	[redacted]	[redacted]	[redacted]	[redacted]	[redacted]
[redacted]	[redacted]	[redacted]	[redacted]	[redacted]	[redacted]	[redacted]	[redacted]	[redacted]	[redacted]	[redacted]	[redacted]	[redacted]	[redacted]	[redacted]	[redacted]	[redacted]	[redacted]	[redacted]
[redacted]	[redacted]	[redacted]	[redacted]	[redacted]	[redacted]	[redacted]	[redacted]	[redacted]	[redacted]	[redacted]	[redacted]	[redacted]	[redacted]	[redacted]	[redacted]	[redacted]	[redacted]	[redacted]
[redacted]	[redacted]	[redacted]	[redacted]	[redacted]	[redacted]	[redacted]	[redacted]	[redacted]	[redacted]	[redacted]	[redacted]	[redacted]	[redacted]	[redacted]	[redacted]	[redacted]	[redacted]	[redacted]
[redacted]	[redacted]	[redacted]	[redacted]	[redacted]	[redacted]	[redacted]	[redacted]	[redacted]	[redacted]	[redacted]	[redacted]	[redacted]	[redacted]	[redacted]	[redacted]	[redacted]	[redacted]	[redacted]
[redacted]	[redacted]	[redacted]	[redacted]	[redacted]	[redacted]	[redacted]	[redacted]	[redacted]	[redacted]	[redacted]	[redacted]	[redacted]	[redacted]	[redacted]	[redacted]	[redacted]	[redacted]	[redacted]
[redacted]	[redacted]	[redacted]	[redacted]	[redacted]	[redacted]	[redacted]	[redacted]	[redacted]	[redacted]	[redacted]	[redacted]	[redacted]	[redacted]	[redacted]	[redacted]	[redacted]	[redacted]	[redacted]
[redacted]	[redacted]	[redacted]	[redacted]	[redacted]	[redacted]	[redacted]	[redacted]	[redacted]	[redacted]	[redacted]	[redacted]	[redacted]	[redacted]	[redacted]	[redacted]	[redacted]	[redacted]	[redacted]
[redacted]	[redacted]	[redacted]	[redacted]	[redacted]	[redacted]	[redacted]	[redacted]	[redacted]	[redacted]	[redacted]	[redacted]	[redacted]	[redacted]	[redacted]	[redacted]	[redacted]	[redacted]	[redacted]
[redacted]	[redacted]	[redacted]	[redacted]	[redacted]	[redacted]	[redacted]	[redacted]	[redacted]	[redacted]	[redacted]	[redacted]	[redacted]	[redacted]	[redacted]	[redacted]	[redacted]	[redacted]	[redacted]
[redacted]	[redacted]	[redacted]	[redacted]	[redacted]	[redacted]	[redacted]	[redacted]	[redacted]	[redacted]	[redacted]	[redacted]	[redacted]	[redacted]	[redacted]	[redacted]	[redacted]	[redacted]	[redacted]
[redacted]	[redacted]	[redacted]	[redacted]	[redacted]	[redacted]	[redacted]	[redacted]	[redacted]	[redacted]	[redacted]	[redacted]	[redacted]	[redacted]	[redacted]	[redacted]	[redacted]	[redacted]	[redacted]
[redacted]	[redacted]	[redacted]	[redacted]	[redacted]	[redacted]	[redacted]	[redacted]	[redacted]	[redacted]	[redacted]	[redacted]	[redacted]	[redacted]	[redacted]	[redacted]	[redacted]	[redacted]	[redacted]
[redacted]	[redacted]	[redacted]	[redacted]	[redacted]	[redacted]	[redacted]	[redacted]	[redacted]	[redacted]	[redacted]	[redacted]	[redacted]	[redacted]	[redacted]	[redacted]	[redacted]	[redacted]	[redacted]
[redacted]	[redacted]	[redacted]	[redacted]	[redacted]	[redacted]	[redacted]	[redacted]	[redacted]	[redacted]	[redacted]	[redacted]	[redacted]	[redacted]	[redacted]	[redacted]	[redacted]	[redacted]	[redacted]
[redacted]	[redacted]	[redacted]	[redacted]	[redacted]	[redacted]	[redacted]	[redacted]	[redacted]	[redacted]	[redacted]	[redacted]	[redacted]	[redacted]	[redacted]	[redacted]	[redacted]	[redacted]	[redacted]
[redacted]	[redacted]	[redacted]	[redacted]	[redacted]	[redacted]	[redacted]	[redacted]	[redacted]	[redacted]	[redacted]	[redacted]	[redacted]	[redacted]	[redacted]	[redacted]	[redacted]	[redacted]	[redacted]
[redacted]	[redacted]	[redacted]	[redacted]	[redacted]	[redacted]	[redacted]	[redacted]	[redacted]	[redacted]	[redacted]	[redacted]	[redacted]	[redacted]	[redacted]	[redacted]	[redacted]	[redacted]	[redacted]
[redacted]	[redacted]	[redacted]	[redacted]	[redacted]	[redacted]	[redacted]	[redacted]	[redacted]	[redacted]	[redacted]	[redacted]	[redacted]	[redacted]	[redacted]	[redacted]	[redacted]	[redacted]	[redacted]
[redacted]	[redacted]	[redacted]	[redacted]	[redacted]	[redacted]	[redacted]	[redacted]	[redacted]	[redacted]	[redacted]	[redacted]	[redacted]	[redacted]	[redacted]	[redacted]	[redacted]	[redacted]	[redacted]

TI-NHTSA 005817

[redacted]	[redacted]	[redacted]	[redacted]	[redacted]	[redacted]	[redacted]	[redacted]	[redacted]	[redacted]	[redacted]	[redacted]	[redacted]	[redacted]	[redacted]
	[redacted]	[redacted]	[redacted]	[redacted]	[redacted]	[redacted]	[redacted]	[redacted]	[redacted]	[redacted]	[redacted]	[redacted]	[redacted]	[redacted]
	[redacted]	[redacted]	[redacted]	[redacted]	[redacted]	[redacted]	[redacted]	[redacted]	[redacted]	[redacted]	[redacted]	[redacted]	[redacted]	[redacted]
	[redacted]	[redacted]	[redacted]	[redacted]	[redacted]	[redacted]	[redacted]	[redacted]	[redacted]	[redacted]	[redacted]	[redacted]	[redacted]	[redacted]
	[redacted]	[redacted]	[redacted]	[redacted]	[redacted]	[redacted]	[redacted]	[redacted]	[redacted]	[redacted]	[redacted]	[redacted]	[redacted]	[redacted]
	[redacted]	[redacted]	[redacted]	[redacted]	[redacted]	[redacted]	[redacted]	[redacted]	[redacted]	[redacted]	[redacted]	[redacted]	[redacted]	[redacted]
	[redacted]	[redacted]	[redacted]	[redacted]	[redacted]	[redacted]	[redacted]	[redacted]	[redacted]	[redacted]	[redacted]	[redacted]	[redacted]	[redacted]
	[redacted]	[redacted]	[redacted]	[redacted]	[redacted]	[redacted]	[redacted]	[redacted]	[redacted]	[redacted]	[redacted]	[redacted]	[redacted]	[redacted]
	[redacted]	[redacted]	[redacted]	[redacted]	[redacted]	[redacted]	[redacted]	[redacted]	[redacted]	[redacted]	[redacted]	[redacted]	[redacted]	[redacted]
	[redacted]	[redacted]	[redacted]	[redacted]	[redacted]	[redacted]	[redacted]	[redacted]	[redacted]	[redacted]	[redacted]	[redacted]	[redacted]	[redacted]
	[redacted]	[redacted]	[redacted]	[redacted]	[redacted]	[redacted]	[redacted]	[redacted]	[redacted]	[redacted]	[redacted]	[redacted]	[redacted]	[redacted]
	[redacted]	[redacted]	[redacted]	[redacted]	[redacted]	[redacted]	[redacted]	[redacted]	[redacted]	[redacted]	[redacted]	[redacted]	[redacted]	[redacted]
	[redacted]	[redacted]	[redacted]	[redacted]	[redacted]	[redacted]	[redacted]	[redacted]	[redacted]	[redacted]	[redacted]	[redacted]	[redacted]	[redacted]
	[redacted]	[redacted]	[redacted]	[redacted]	[redacted]	[redacted]	[redacted]	[redacted]	[redacted]	[redacted]	[redacted]	[redacted]	[redacted]	[redacted]
	[redacted]	[redacted]	[redacted]	[redacted]	[redacted]	[redacted]	[redacted]	[redacted]	[redacted]	[redacted]	[redacted]	[redacted]	[redacted]	[redacted]
	[redacted]	[redacted]	[redacted]	[redacted]	[redacted]	[redacted]	[redacted]	[redacted]	[redacted]	[redacted]	[redacted]	[redacted]	[redacted]	[redacted]
	[redacted]	[redacted]	[redacted]	[redacted]	[redacted]	[redacted]	[redacted]	[redacted]	[redacted]	[redacted]	[redacted]	[redacted]	[redacted]	[redacted]
	[redacted]	[redacted]	[redacted]	[redacted]	[redacted]	[redacted]	[redacted]	[redacted]	[redacted]	[redacted]	[redacted]	[redacted]	[redacted]	[redacted]

MATERIAL ANALYSIS

TI-NHTSA 005825

F2AC-9F924-AA

MATERIAL ANALYSIS

PARTS LIST

	PART NAME	PART #	CERTIFIED
1	BABE	46515-3	YES
2	STA.TERM.	36888-1	YES
3	MOVE.CONTACT	74408-1	YES
4	RIVET	74171-1	YES
5	MOVE.TERM.	36887-1	YES
6	SPRING ARM	36889-1	YES
7	US12 HEXPORT	36900-1	YES
8	GASKET	74353-1	YES
9	CUP	27713-1	YES
10	SEAL	74176-1	YES
	)))		
11	KAPTON STRIP	27225-1	YES
12	WASHER	27639-1	YES
13	CONVERTER	27406-1	YES
14	KAPTON TAPE	74224-1	YES
	)))		
15	SPACER	73958-2/-3	YES
16	CRIMP RING	74797-1	YES
17	TRANSFER PIN	74078-SEL	YES
18	ENVIG.SEAL	74247-4	YES

Product Quality Documentation

CERTIFICATE OF COMPLIANC

Customer Order Number	Customer Part Number	GE Requisition Number	Material, Grade and Color
[redacted]LE/SOLETHE		1281498/1	NAVI 87850 111

Lot Number	Qty Shipped	U.M.	Shipped From	Date Shipped	Shipper's Number
N02311	100	LB	HIRE SERVICE INC	04/06/92	01329195

It is hereby certified that the product indicated above conforms to our standard internal specifications for the designated material. This certification is subject to our standard conditions of sale applying to products sold by the General Electric Company.

Specification

Specification Originator

Specification Comments

TEST	REFERENCE	REQUIREMENT	(ENGLISH)	(METRIC)
LOT DATA:				
HDT @264 PSI - 1/4"	ASTM D648	460.0 DEG F MINIMUM	460.0 DEG F	238 DEG C
NOTCHED IZOD IMPACT-1/8"	ASTM D256	1.5 FT-LB/IN MINIMUM	2.0 FT-LB/IN	107.0 J/M
% ELONGATION	ASTM D638	4 % MINIMUM	5 %	
TENSILE YIELD	ASTM D638	20,000 PSI MINIMUM	28,500 PSI	196.5 MPA
FLEXURAL MODULUS	ASTM D790	1,000,000 PSI MINIMUM	1,865,000 PSI	8,715.9 MPA
FLEXURAL STR @ YIELD	ASTM D790	20,000 PSI MINIMUM	37,450 PSI	261.8 MPA
SPECIFIC GRAVITY	ASTM D792	1.31-1.35 G/CC		1.33 G/CC
MOISTURE CONTENT	KARL FISCHER	0.50 % MAXIMUM	0.08 %	
PRODUCT AUDIT DATA:			DATE OF LAST AUDIT: 05/91	
FLAMMABILITY,.100" THICK	UL94V-2	4.00 IN/MIN MAXIMUM	SELF-EXTINGUISHING W/NO BURN RATE	

ROBERT D. MATTHEWS
Quality Manager

THOMAS HEEPS
Manufacturing Manager

If you have any questions concerning this, please contact:

[redacted]

TEXAS INSTRUMENTS INC.
ACCOUNTS PAYABLE DEPT
PO BOX 696
ATTLEBORO, MA 02703-0696
Attn: JIM KEAN

04-08-92 03:22 PM F01

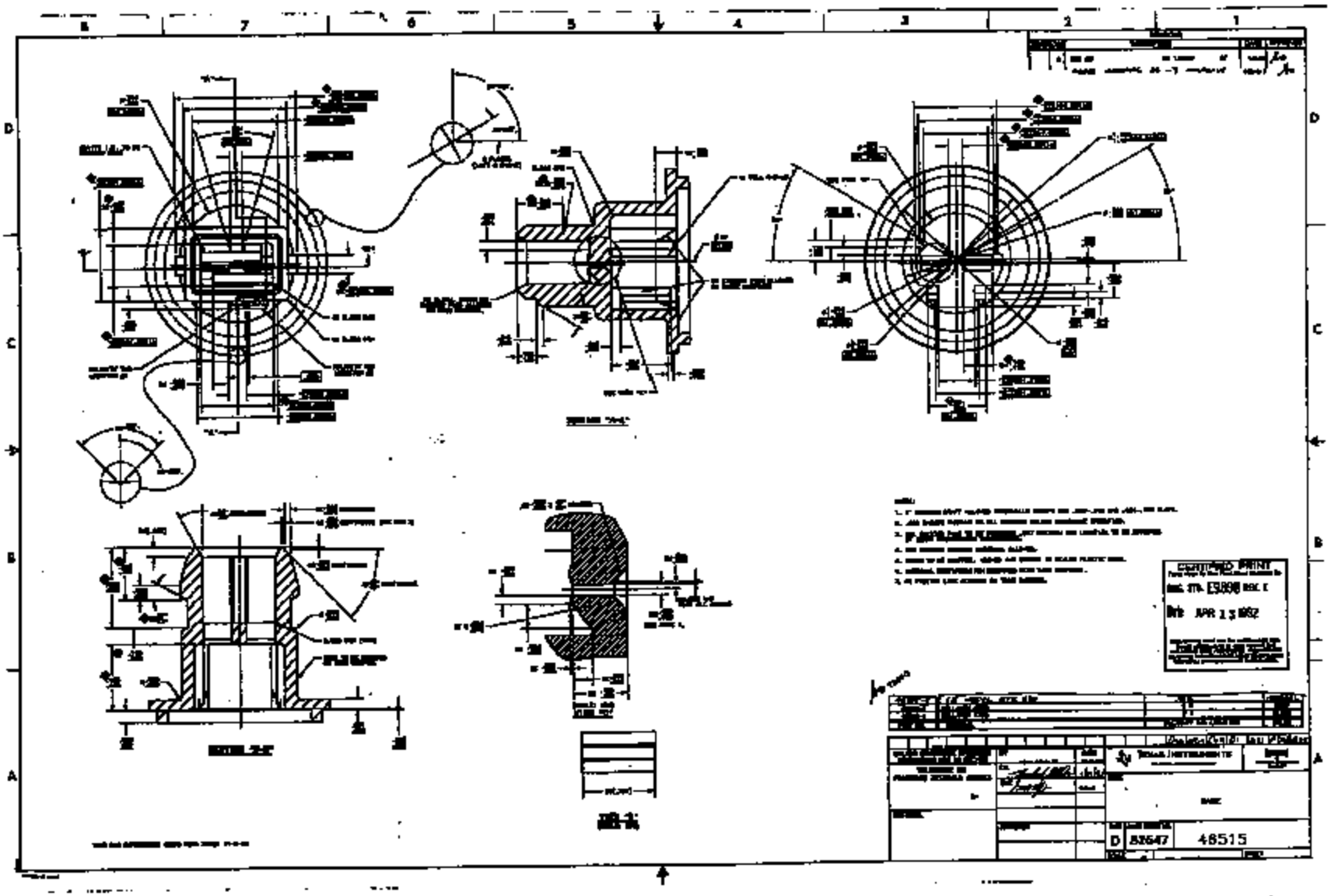

TI-NHTSA 005828

August 20, 1991

To: Donna Moynihan 12-27

From: Beth Kill 10-16

Subject: GP-3 Material Confirmation
TSL Request # 110823

Sample Description:

P/N 36888-1 Stationary Terminal CDA 260 Brass
1/2 Hard

Results:

	P/N 36888-1	Spec. CDA 260
Cu (wt%)	68.5%	68.5 - 71.5%
Fe	0.030	0.05 max
Pb	0.010	0.07 max
Zn	balance	balance
Hardness	73 RB	60 - 77 RB

Results confirm the terminal is made of CDA 260 brass, 1/2 hard.

Regards,

Beth X3069

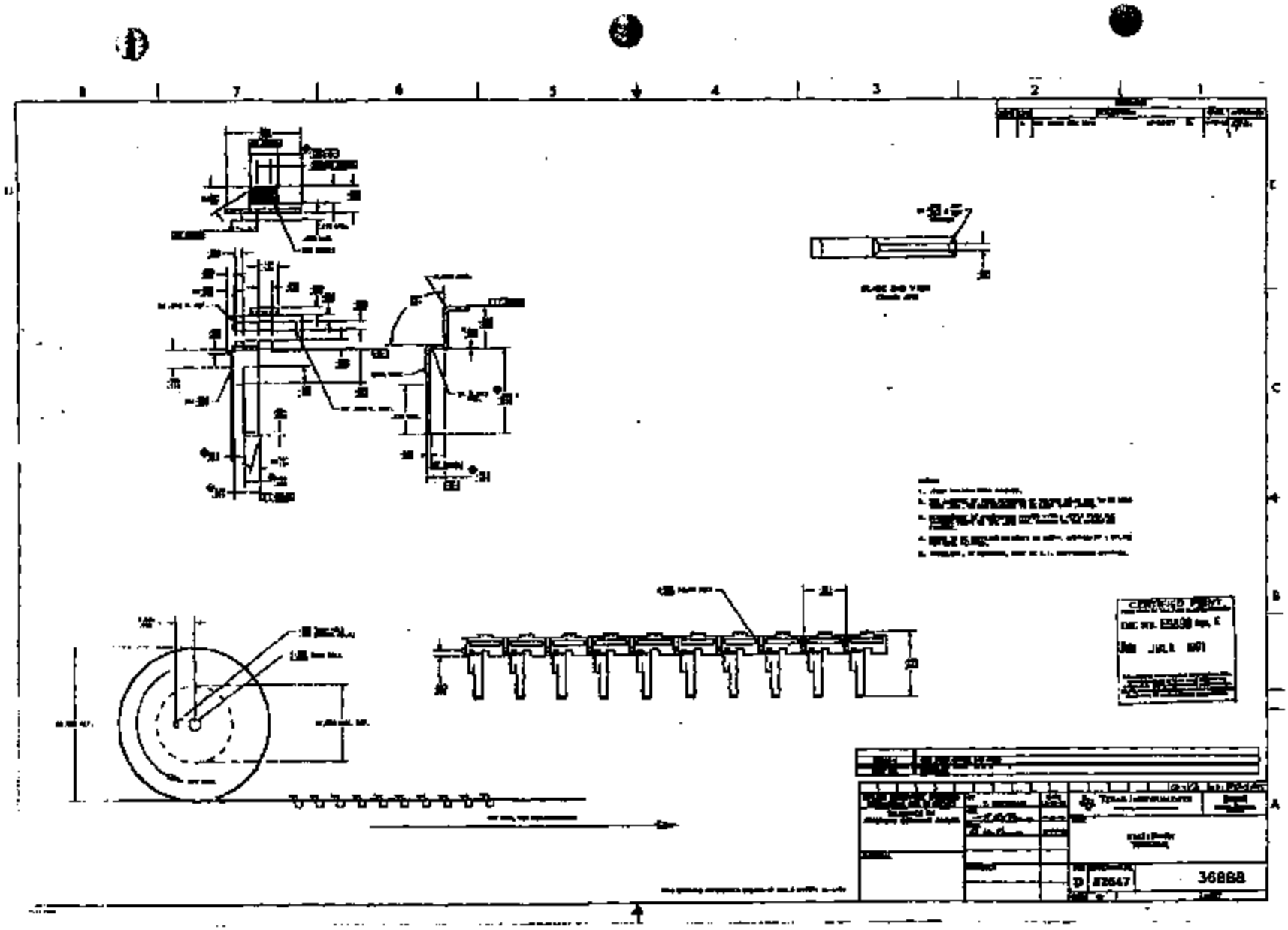

TI-NHTSA 006930

ACME MILFORD
857 BRIDGEPORT AVE.
MILFORD, CONNECTICUT 06460

TEL\ 203-878-4631 * FAX 203-878-3071

TO: TEXAS INSTRUMENTS

CERTIFICATE OF COMPLIANCE

ACME MILFORD CERTIFIES THAT;

P.O. NUMBER: 500011076
ACME/MILFORD CONTROL NUMBER: 17642
ACME/MILFORD P/N: 6254-A
QUANTITY: 915425

WAS PROCESSED TO CONFORM TO THE FOLLOWING

PART NUMBER: 74403-1
PART REVISION: D
MATERIAL: COPPER CDA 162

HEAT NUMBER:
TENSILE AFTER LIGHT DRAW:
FINISH: .0011-.0024 SILVER PLATE
: (.0007 MIN OVER VENT)

SIGNED: DATE: 09-06-91

JOHN MICHAUD
TITLE\ QUALITY CONTROL MANAGER

SWORN TO AND SUBSCRIBED BEFORE ME THIS_____DAY_____MONTH_____YEAR

NOTARY PUBLIC_____

RADCLIFF WIRE INC.

FLAT, SQUARE AND SHAPED WIRE

RONZO ROAD • P.O.BOX 603 • BRISTOL, CONNECTICUT 06010
TELEPHONE: 203 / 583-1305 • FAX: 203 / 583-6553

ORDER NO. 532

MATERIAL CERTIFIC

SOLD TO

ACME MILFORD
857 BRIDGEPORT AVENUE
MILFORD, CT 06460

SHIP TO

VIA BUNTINGS

YOUR ORDER NO.	DATE ENTERED	DATE WANTED	DATE PROMISED	F.O.B.
347-2	6/28/91	7/29/91		Bristol

QTY/WEIGHT ORDERED	SIZE/TOLERANCE	SHAPE
300 lbs.	.0575 p/m .0005 Dia.	Round

TEMPER	MATERIAL	EDGE	FINISH
	ETP 110 Copper		

SPECS	TENSILE	
	45-55,000 PSI	[redacted]

SPECIAL CONDITIONS

CERTS/MATL.

SPOOL-COIL

SHIPPING RECORD

DATE	QUANTITY	PACKAGING	TEST
7/16/91	323#	1 Barrel	46,000 PSI

HEAT	C	MN	SI	S	P	Cr	Ni	Cu	B	Fe	A
HARDNESS	TI	CB + TA	Co	MO	V	Mg	Ca	K	Zr	Pb	
TENSILE STR. 46,000 PSI	ZA	CB	TA	Sn	Be						

*This is to certify that the above wire was procured from raw material and was found to be incompliance with the specifications of your po#347-2.

RADCLIFF WIRE, INC.

Claire Boucher
AUTHORIZED SIGNATURE
Claire Boucher Quality Control Inspector

TI-NHTSA 005832

AMERICAN ELECTRO PRODUCTS INC.
1358 THOMASTON AVENUE
WATERBURY, CT 06704
(203) 756-7051

Certificate of Compliance

NO. 21[illegible]
REL# 1

MILFORD RIVET & PACH
857 BRIDGEPORT AVE

MILFORD CT 06460

DATE 06/30/91

YOUR ORDER NO. 152[illegible]
SHIPPED VIA WATER P. S.

This is to verify that parts and/or your material furnished against your purchase order number shown above, have been manufactured in accordance with requirements and specification as required.

PART NO.	DESCRIPTION	QUANTITY
6254A	SILVER 0.001100-0.002400 WAX	720.825.0

Tests to substantiate this have been performed in our plant (or have been performed by our suppliers) and are available upon request from us/or our suppliers.

Very truly yours,
AMERICAN ELECTRO PRODUCTS, INC.
Signed by: [illegible]
Q.C. Inspector

TITLE MOVABLE CONTACT REV. D 74408

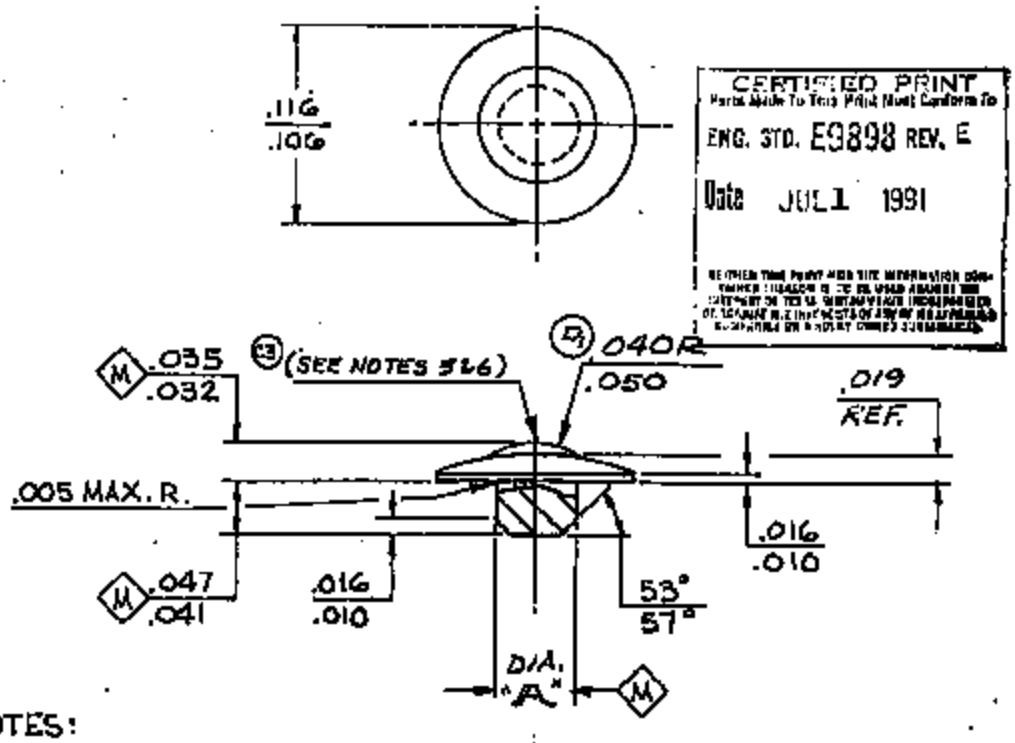

NOTES:

1. PARTS MUST BE STORED IN PLASTIC BAGS THROUGH ALL SHIPPING AND HANDLING PROCESSES.
2. MATERIAL & PLATING THICKNESS CERTIFICATION REQUIRED WITH EACH SHIPMENT.
3. DIMENSIONS APPLY AFTER PLATING.
4. MEASURE PLATING THICKNESS BY MOUNTING & CROSS-SECTIONING PART.
5. PLATING THICKNESS APPLIES AT THE INDICATED LOCATION ONLY.
6. (E2) TOOL VENT MARK ON .040-.050R ALLOWED. DIMENSIONS MAY NOT EXCEED .001 IN HEIGHT AND .003 IN WIDTH. THERE MUST BE NO VOID IN PLATING IN THIS AREA. .032-.035 DIMENSION MAY MEASURE .036 OVER THIS MARK.
7. (D2) PLATING THICKNESS OF .0007 MINIMUM ALLOWED ABOVE TOOL VENT MARK ONLY. ADJACENT AREAS MUST MEET "FINISH" REQUIREMENTS.

PART NO.	MATERIAL	(E1) FINISH (M)	DIA. "A"
74408-1	COPPER	(D2) SILVER PLT. .0011/.0024 THK. (SEE NOTE #5)	.0605-.063

REV'S: C-3 Q24 Q11-1 Q11 M21-1 B1 1F

BY T. Dell 1-6-55
CK. R. Robert 1-13-88
ENG. Ron Barber 1-13-88

TEXAS INSTRUMENTS INCORPORATED
ATTLEBORO, MASS., U.S.A.

KIXON CONTROL PRODUCTS DIVISION

SIZE A

PARTS LIST 74408

74408

SEE CN - CRF 90937 B.B. 11-5-87 M.D.
SEE DCN CR 91486 TB 5-7-86 B.B.
SEE DCN CR 91486 TB 1-6-85 A.H.
SEE DCN CR 91486 TB 9-19-88 A.M.
C
D
ISS. ISSUE
S6PSL4-1

TI-NHTSA 005834

ACME MILFORD
857 BRIDGEPORT AVE.
MILFORD, CONNECTICUT 06460

TEL\ 203-878-4631 * FAX 203-878-5071

TO: TEXAS INSTRUMENTS

CERTIFICATE OF COMPLIANCE

ACME MILFORD CERTIFIES THAT:

P.O. NUMBER: 500011502
ACME/MILFORD CONTROL NUMBER: 19095
ACME/MILFORD P/N: 6051-A
QUANTITY: 99,995

WAS PROCESSED TO CONFORM TO THE FOLLOWING

PART NUMBER: 74171-1
PART REVISION: B
MATERIAL: BRASS CDA 260

HEAT NUMBER:
TENSILE AFTER LIGHT DRAW:
FINISH: PLAIN FINISH

SIGNED: John Michaud DATE: 05-30-91

JOHN MICHAUD
TITLE\ QUALITY CONTROL MANAGER

SWORN TO AND SUBSCRIBED BEFORE ME THIS/_____DAY_____MONTH_____YEAR

NOTARY PUBLIC_____

SEYMOUR SPECIALTY WIRE COMPANY
(An Employee Owned Company)
18 Franklin Street
Seymour, Connecticut 06483
(203) 888-8778

ANALYSIS REPORT

Customer: Milford Rivet & Machine Co.
Address: P.O. Box 4018
City: Elyria, OH 44035

Date: December 21, 1987
Customer PO: 37309
Seymour #: S-54738-C

Material: CDA 260 Wire
Size: .060" Rd.
Specification: T.S. 56/63,000 PSI OR #13 Heavy Soap Coat
Conforms to UNS# C26000

Date Shipped: 12-18-87
Weight: 983 lbs.

CHEMICAL ANALYSIS

COPPER	70.03
LEAD	<.01
IRON	<.01
ZINC	Bal.
TIN	
SILICON	
MANGANESE	
PHOSPHOROUS	
NICKEL	
ALUMINUM	

< Less than

PHYSICAL ANALYSIS

TENSILE STRENGTH PSI	65,000
YIELD STRENGTH PSI	
ELONGATION, % in.	20%
ROCKWELL	
BEND TEST	
GRAIN SIZE, AVERAGE	
RESISTIVITY ohms/cm	
CONDUCTIVITY	

State of Connecticut
County of New Haven

Sworn and subscribed to before me this 21 day of Dec. 1987

TI-NHTSA 005836

TITLE RIVET

REV. B

74171

74171

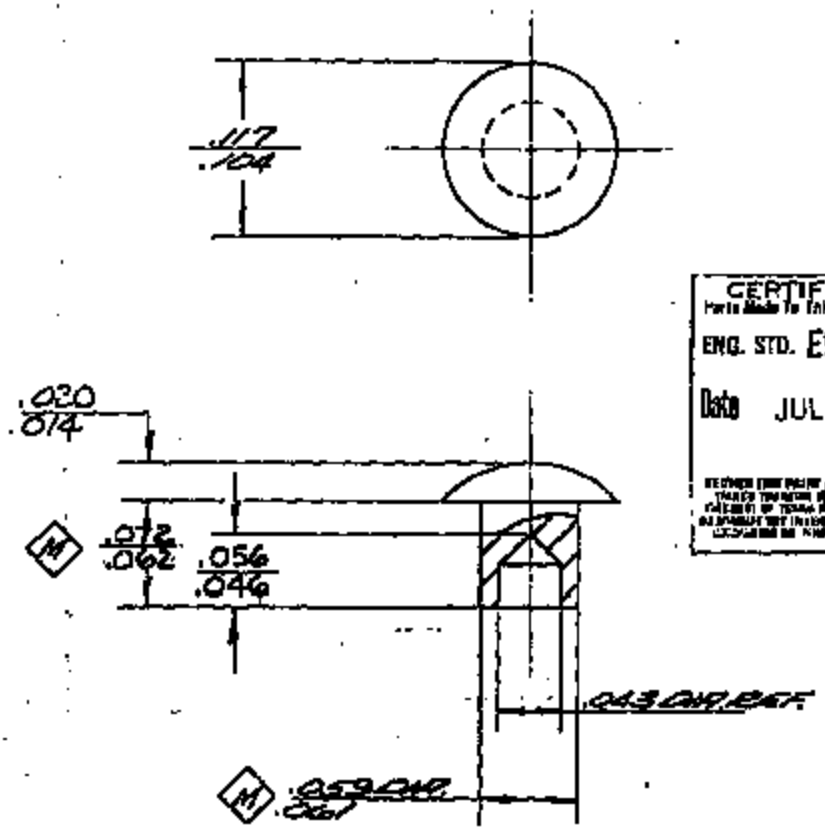

CERTIFIED PRINT
Parts Made To This Print Will Conform To
ENG. STD. E9898 REV. E
Date JUL 1 1991

NOTE:
1. PARTS MUST BE STORED IN PLASTIC BAGS THRU ALL SHIPPING AND HANDLING PROCESSES

74171-1	COP #260 BRASS
PART NO.	MATERIAL

BY 2-1-84
CK. F.H. Wa... 2-1-84
ENG. D. Hall 2/13/84

TEXAS INSTRUMENTS INCORPORATED
ATTLEBORO, MASS., U.S.A.

NIXDORF
CONTROL ASSEMBLY DIVISION

REV. A

74171

TI-NHTSA 005837

August 20, 1991

To: Donna Moynihan 12-27

From: Beth Kill 10-16

Subject: GP-3 Material Confirmation
TSL Request # 110624

Sample Description:

P/N 36887-1 Moving Terminal CDA 260 Brass
1/2 Hard

Results:

	P/N 36887-1	Spec. CDA 260
Cu (wt%)	68.7%	68.5 - 71.5%
Fe	0.020	0.05 max
Pb	0.010	0.07 max
Zn	balance	balance
Hardness	80.5 RB	60 - 77 RB

Results confirm the terminal is made of CDA 260 brass, and slightly above 1/2 hard.

Regards,

Beth X3069

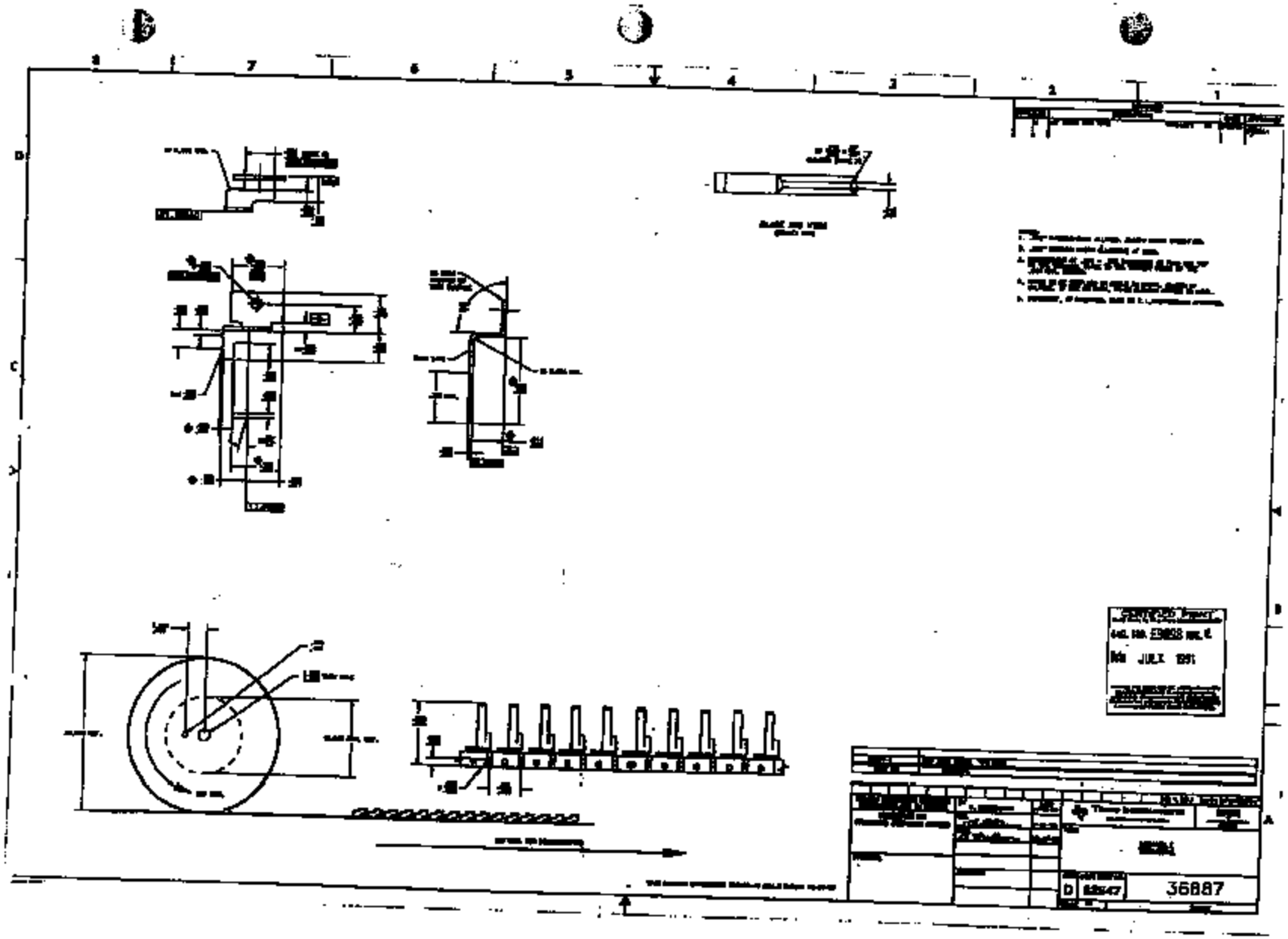

TI-MHT8A 005839

August 20, 1991

To: Donna Moynihan 12-27

From: Beth Kill 10-16

Subject: GP-3 Material Confirmation
TSL Request # 110825

Sample Description:

P/N 36889-1 Spring C17200 Beryllium Copper

Results:

	P/N 36889-1	Spec. C17200
Be (wt%)	1.87%	1.80 - 2.00%
Fe	0.089	
Ni	0.068	[Fe + Ni + Co <0.6%]
Co	0.220	[Ni + Co >0.2%]
Hardness	300 DPH	285 - 343 DPH

Results confirm the spring is made of C17200 beryllium copper at the specified hardness.

Regards,

Beth X3069

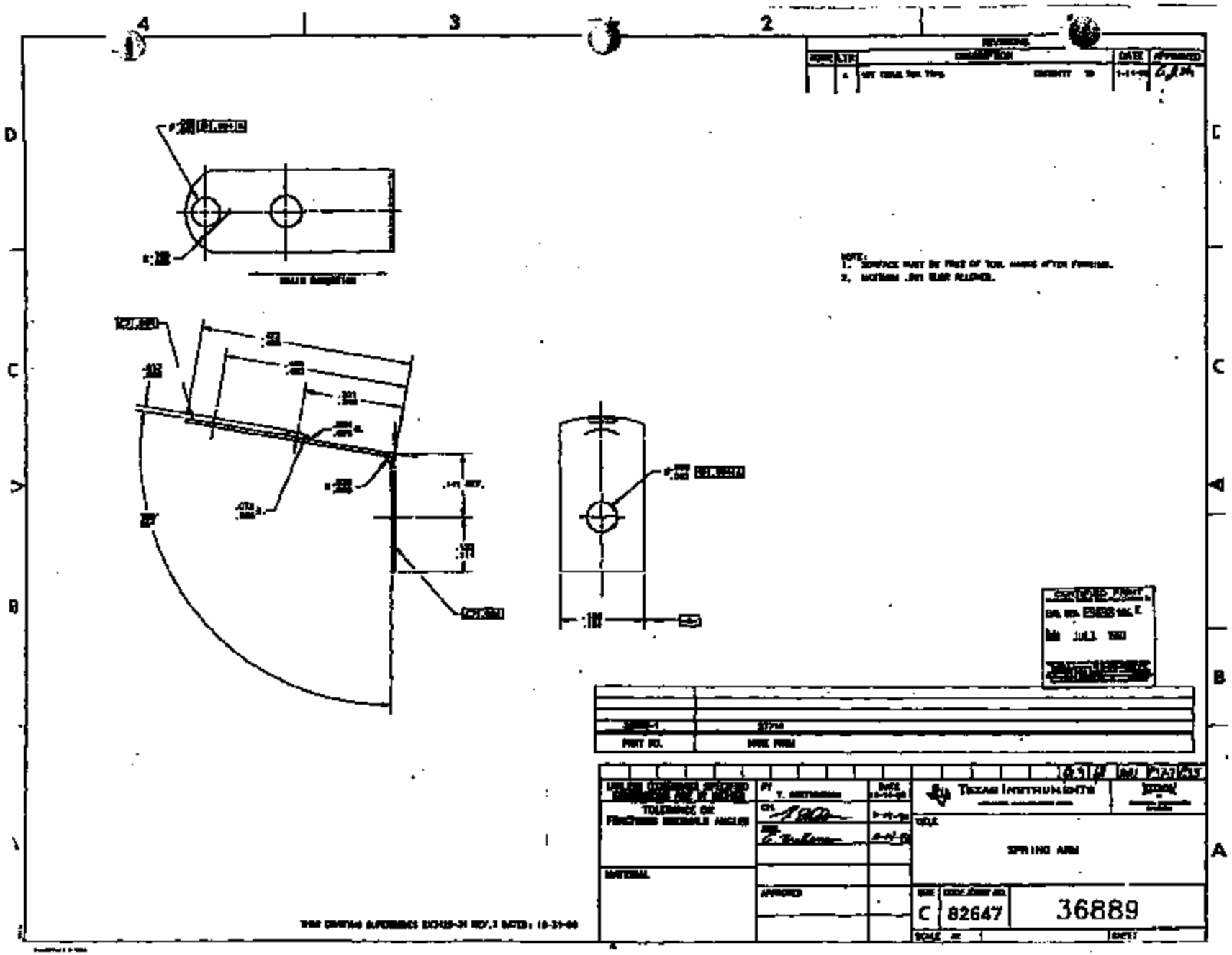

TI-NH73A 005841

REVISIONS				
ZONE	LTR	DESCRIPTION	DATE	APPROVED
	B	1. NOTE 4 EDGE BAS SHD, 5. ADDED NOTES 5, 6, AND 7.	1-24-81	

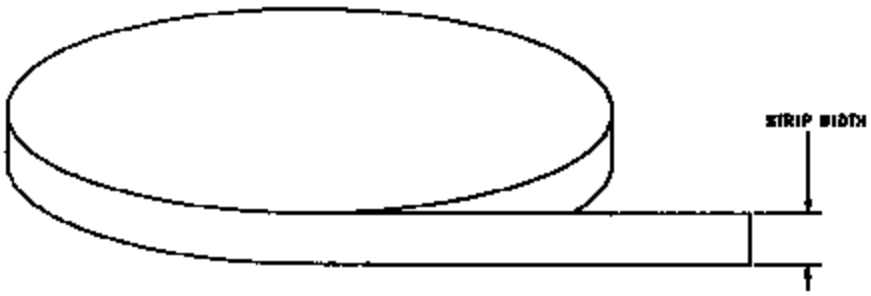

NOTES:

1. MATERIAL CERTIFICATION INCLUDING TENSILE STRENGTH AND HARDNESS DATA REQUIRED WITH EACH SHIPMENT.
2. EACH REEL TO BE LABELED WITH T.I. PART NUMBER ON INSIDE OF CORE.
3. MAX. ALLOWABLE BURR .001.
4. REELS SLITTED FROM EDGE OF MASTER COIL NOT ACCEPTABLE.
5. MAX. WEIGHT PER REEL IS 30 LBS.
   MIN. WEIGHT PER REEL IS 10 LBS.
6. REEL TO BE FANGMAKE STYLE,
   13" TO 16" ID,
   26" MAX. OD,
   3/4" DRIVE HOLE
7. NO SPLICES ALLOWED.

CERTIFIED PRINT
ENG. STD. E9898 REV. E
Date JULY 1981

PART NO	MATERIAL	TENSILE STRENGTH (PSI)	HARDNESS DPH	THICKNESS (IN)	STRIP WIDTH	PAD PUT UP (ID) (OD)
27716-1	BERYLLIUM COPPER C17200, MILL HARDENED (BRUSH WELLMAN ALLOY 190 HM)	135-195	320-343	.008 ±.0002	.181-.185	TBD

THIS DRAWING SUPERSEDES 27716SH1 REV. A DATED 11-14-80

DRAWN BY T. WEITENHAGE	DATE 11-14-80	TEXAS INSTRUMENTS	TI DIVISION CONTROL PRODUCTS
	1-31-81	SPRING MATERIAL STRIP SPECIFICATION	
		B	82647	27716SH1

TI-NHTSA 005942

ELCO INDUSTRIES, INC.
PRECISION FORMING DIVISION
1111 Samuelson Road • P.O. Box [illegible]
Rockford, Illinois 61105-[illegible]
Phone 815/397-9181 • Fax 815/397-9108 Int. 746

CERTIFICATION

May 18, 1991

TEXAS INSTRUMENTS INC
ACCTS PAYABLE DEPT
P.O. BOX 655
ATTLEBORO, MA 02703

This is to certify the parts furnished on your purchase order have been produced in accordance with specifications listed on your purchase order and/or blueprint.

MATERIAL CERTIFICATION, FINAL INSPECTION AND SAMPLES SENT

Records covering material used and the tests and inspection conducted are on file, subject to examination.

Purchase Order No.	500015557
Register No.	76825
Part No.	35900-1
Description	3/8-24 X .51
Quality Control No.	A9341-6
Quantity	8.735

35900-1

CERTIFICATION

Authorized Signature
Quality Coordinator

The times call for quality. Elco quality.

F-61

TI-NHTSA 005843

12-14-90

[redacted]K COMPANY LIMITED

Po# 03462

Type & Grade SC-3896 AISI10L10 SAF

[redacted]ification 36400-1

40410#

Chemical Composition Of Steel	Heat No.	Coil No.	C % × 100	Mn % × 100	Si % × 100	P % × 1000	S % × 1000	Cu % × 100	Ni % × 100	Cr % × 100	Mo % × 100	Pb % × 10,000
	C78314	0001 - 0018	10	41	6	5	21	1	1	3		PB XX100 22

Physical Properties	Nominal Diameter		Tolerance of Diameter		Tensile Strength		Decarborization	
	in	mm	in	mm	1,000 psi	kg/mm²	Dec-T	Dec-F
	0.565	14.351	+ 0.0040	+ 0.1018	68.0 MAX	48.5 MAX	MAX	

Packing	Coil Weight
	ABT. 2.272LBS (ABT. 1.033KGS)
	WRAPPED WITH POLYPROPYLENE SHEET.

Test Results

Sample No.	Diameter mm	Tensile Strength Kg/mm²	Tensile Strength 1,000psi	Sample No.	Diameter mm	Tensile Strength Kg/mm²	Tensile Strength 1,000psi
0001	14.38	33.7	47.9				
0002	14.38	32.7	47.9				
0003	14.37	32.7	46.5				
0004	14.41	33.7	47.9				
0005	14.38	32.3	45.9				
0006	14.38	32.9	46.8				
0007	14.37	33.3	47.4				
0008	14.37	33.8	48.1				
0009	14.36	33.1	47.1				
0010	14.36	34.7	49.4				
0011	14.36	33.1	47.1				
0012	14.36	32.7	46.5				
0013	14.38	34.3	48.8				
0014	14.38	33.8	48.1				
0015	14.37	34.2	48.6				
0016	14.36	35.5	50.5				
0017	14.38	35.5	50.5				
0018	14.36	34.2	48.6				
		*********					

INSPECTION HARDNESS TESTING RESULTS

TEST: R.C. Kuan SCALE USED: B PART NO.: [illegible]

SAMPLE NO.:		RESULTS:
1	——>	[illegible]
2	——>	[illegible]
3	——>	[illegible]
4	——>	[illegible]
5	——>	[illegible]
6	——>	[illegible]
7	——>	[illegible]
8	——>	[illegible]
9	——>	[illegible]
10	——>	[illegible]

AVERAGE: 92.9

MAXIMUM: 93.9

MINIMUM: 91.0

9470 36900-1 3735 103117

TECHNICAL SERVICE LABS

TEST NO. 109407

	127	STATE YOUR PROBLEM/ SAMPLE DESCRIPTION	INFORMATION DESIRED: Please section and measure 41°-43° per attached drawing. Thank you Sandy
	146		
	060		
DESCRIPTION	Sandy		
MAIL STATION	11-11		
EXTENSION	3021		
MAIL ID	AT&C		
DATE SUBMITTED	5/23/91		
DATE RECEIVED	5/24/91		
NO. OF SAMPLES	3		
COMPOSITION			36900-1

REPORT OF RESULTS:

(1) 41 - 41

(2) 42 - 41

(3) 41 - 41

DATE RECEIVED 5/24/91 DATE OUT 5/29/91 [illegible]

TECHNICIAN			
HOURS WORKED			
PROCEDURE USED			

*PCC I.D.

MC=325	TM=431	JOCY=126	FACIL=514
PC=127	WIRE=432	CLKE=122	FACIL=521
VERS=168	EPD=621	CAN=654	FACIL=531
AFCC=463	PEP=622	AD DEV=298	STAFF=655
IMO=430	CSD=635	EMCD=677	

DISTRIBUTION: White and Yellow - Lab Pink - Requestor

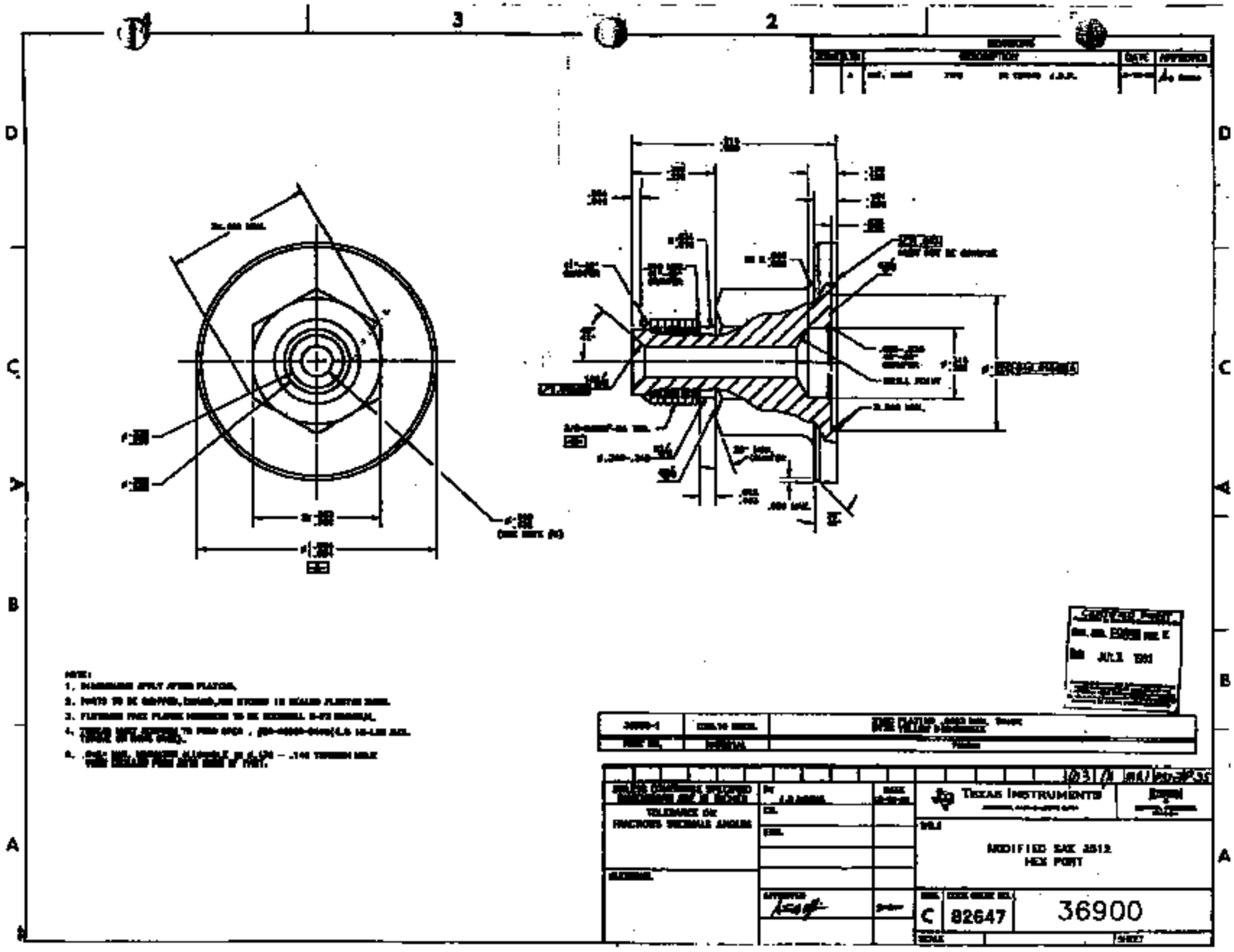

TI-NHTSA 005947

July 29, 1991

To: Donna Moynihan 12-27

From: Beth Kill 10-16

Subject: GP-3 Material Confirmation
TSL Request # 110831

Sample Description:

#110831 P/N 74353-1 Gasket Ethylene propylene rubber

Results:

Akron Rubber Development Laboratory Inc. has analyzed the above component. The material conforms to specification. See the enclosed report.

Regards,

Beth X3069

AKRON RUBBER DEVELOPMENT LABORATORY, INC.
300 KENMORE BOULEVARD • AKRON, OHIO 44301
Office (216) 434-6664 Telefax (216) 434-8668

July 24, 1991

Ms. Elizabeth Kill
Texas Instruments
34 Forest St.
MS 10-16
Attleboro, MA 02703

SUBJECT: Chemical analysis on sample submitted by the above company.
PO# 500065978

RECEIVED: One sample identified as; #110831 Ethylene Propylene JBL compound E-7104-70.

POLYMER IDENTIFICATION: ASTM D-3677
Pyrolysis method

SAMPLE	POLYMER IDENTIFICATION
#110831	Ethylene-Propylene Rubber

Janis Seifert
Senior Chemical Technician
AKRON RUBBER DEVELOPMENT LABORATORY, INC.

Thomas M. Knowles
Vice President, Chemical Services

PN# 11724 INV# 31172601

tk

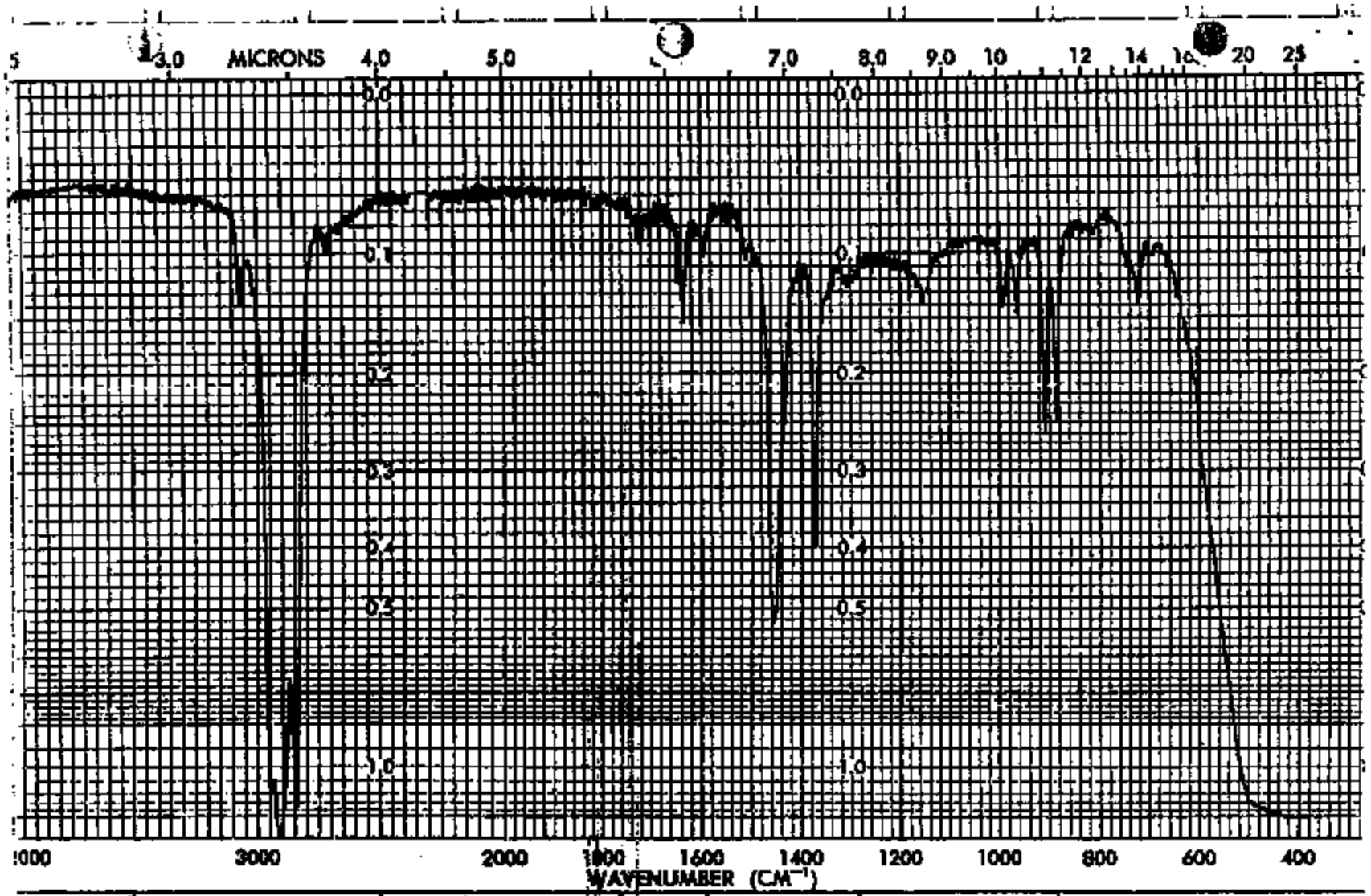

SAMPLE	SOLVENT	SCAN	SINGLE B.
	CONC.	SLIT	T. D. SPEED
	CELL PATH	OPERATOR	ORD.-EXP.
	REFERENCE	DATE	T. CONST.
ORIGIN		No. PE-5102-1001	REF. No.

REMARKS.

TI-NHTSA 005850

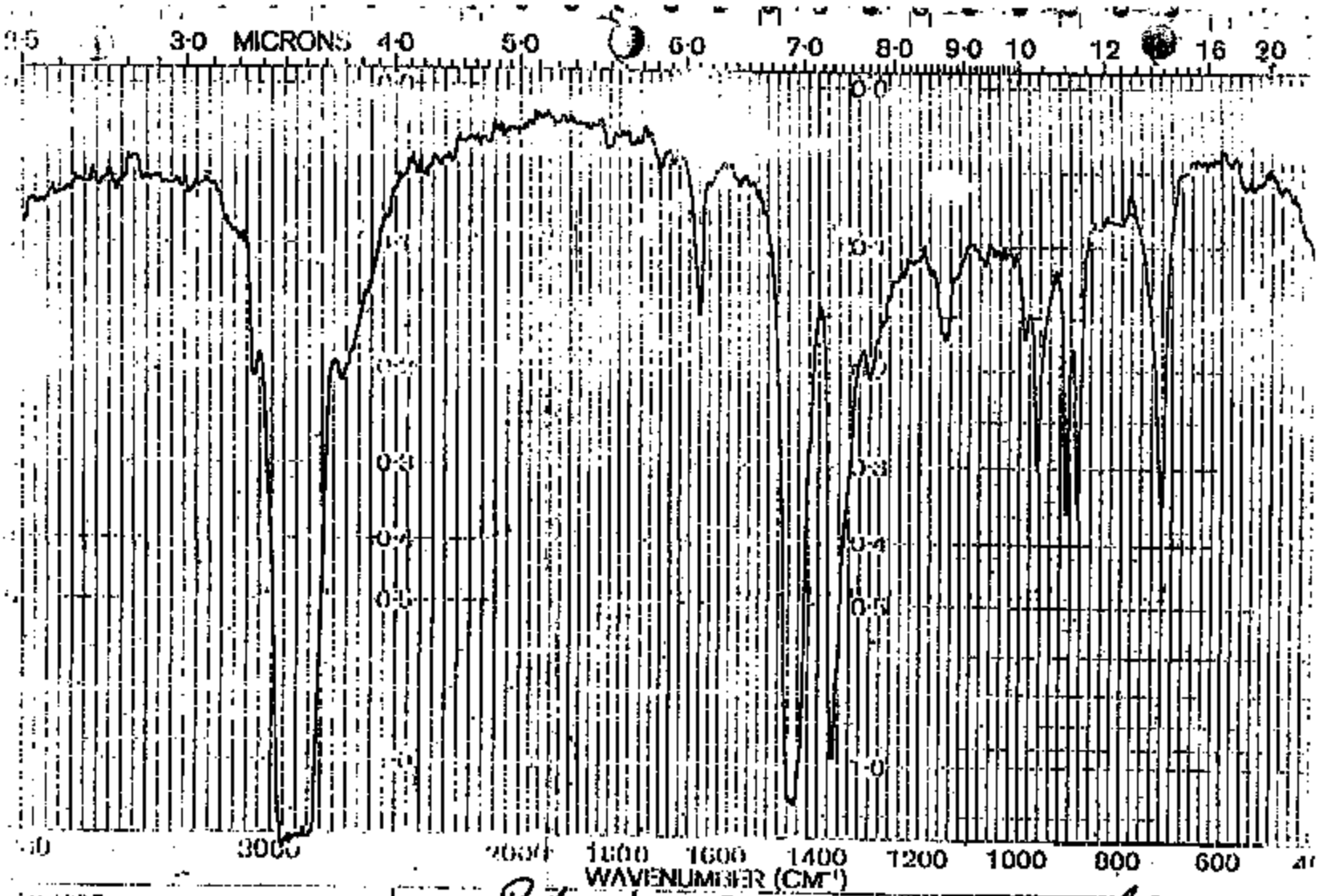

SAMPLE
Ethylene Propylene Rubber

SOLVENT Rotyper
CONC.
CELL PATH
BULLETIN
CHARGE

SCAN 5
SLIT 2
OPERATOR Tom
DATE

SINGLE B.
T.D. SPEED
ORD. EXP.
T. CONST
REF. No.

TOTAL
Control

TI-NHTSA 005951

GASKET

G 74353

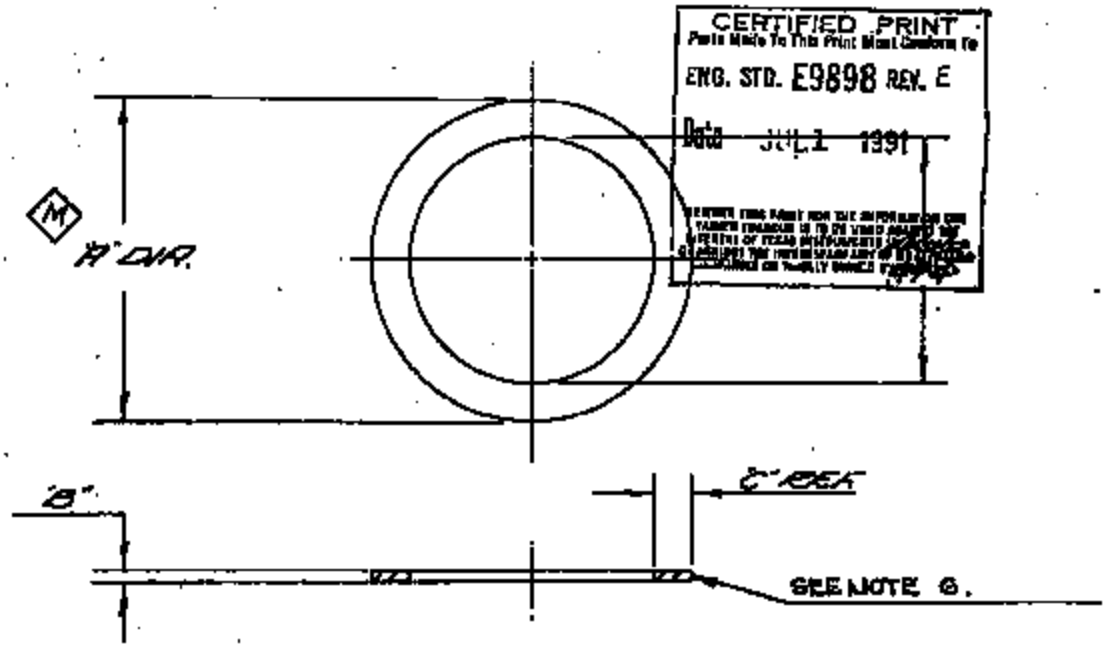

NOTES:

1. PARTS MUST BE PURCHASED FROM T.I. ENGINEERING APPROVED VENDORS, LISTED BELOW.
2. MATERIAL CERTIFICATION REQUIRED WITH EACH SHIPMENT.
3. MATERIAL TO BE COMPATIBLE WITH FREON-12 & ROTENGERMT OIL.
4. PARTS TO BE SHIPPED, ISSUED & STORED IN SEALED PLASTIC BAGS. AND 30,000 PARTS PER BAG MAX.
5. ALL CONTAINERS OF PARTS MUST BE MARKED TO REFLECT ANY MATERIAL LOT, TOOL OR PROCESS CHANGE.
6. DASH 1 (-1) AND DASH 4 (-4) GASKET MUST HAVE FOUR (4) WHITE STRIPING INK MARKS, EQUALLY SPACED AROUND THE CIRCUMFERENCE, AND NOT LESS THAN 1/8 INCH WIDE. NO INK IS ALLOWED ON ANY OTHER SURFACE. (M)

PART NO.	MATERIAL	DUROMETER	COLOR	A (M)	B (M)	C
74353-4	ETYLENE PROPYLENE JBL COMPOUND E-7104-70 JBL PART NO. 61978	70	BLACK	.670-.662	.030-.036	.063
74353-3	ETHYLENE PROPYLENE JBL COMPOUND E-7064	70	WHITE	.670-.662	.030-.036	.063
74353-2	ETHYLENE PROPYLENE JBL COMPOUND E-7059	70	WHITE	.599-.591	.030-.036	.063
74353-1	ETHYLENE PROPYLENE JBL COMPOUND E-7104-70 JBL PART NO. 61978	70	BLACK	.599-.591	.030-.036	.063

REV	CHG. NOTES	CHG. NO.	DATE	BY	CHK.	ENG.
C	ADDED -3					
D	ADDED -4					

74353

ST PS

AT T. Dail 3-18-86
CH. 3-20-86
ENG. 3-19-86

TEXAS INSTRUMENTS INCORPORATED
ATTLEBORO, MASS., U.S.A.

NIXON CONTROL PROGRAMS DIVISION

SIZE A

PLATE LIST 74353

Code Ident No. 83647

TI-NHTSA 005852

VALENTINE TOOL & STAMPING, INC.

111 WEST MAIN ST. NORTON, MASS. 02766
(508) 285-6071

MATERIAL CERTIFICATION

DATE : FRIDAY JUNE 14, 1991

CUSTOMER : TEXAS INSTRUMENTS INC

CUSTOMER P.O. NO : 505063392 SUPPLIER INVOICE NO.: 79580

PART DESCRIPTION : 27713-1 CUP REV.A

SUPPLIER FJO NO. : 18671

QUANTITY SHIPPED : 1,085

SHIPMENT DATE : 06/14/91

WE CERTIFY THAT THE MATERIAL USED
TO PRODUCE THE PRODUCT IN THIS
SHIPMENT, NAMELY
[C1006]
CONFORMS TO T.I. DRAWINGS AND
T.I. PURCHASE ORDER REQUIREMENTS.

SIGNED Jeanne Laflamme QC
(Supplier Representative)

Jeanne Laflamme Quality Control Manager

VALENTINE TOOL & STAMPING, INC.

171 WEST MAIN ST. NORTON, MASS. 02766
(508) 285-5011 226-4068

CERTIFICATE OF CONFORMANCE

DATE : FRIDAY JUNE 14, 1991

CUSTOMER : TEXAS INSTRUMENTS INC

CUSTOMER P.O. NO : 505063392 SUPPLIER INVOICE NO.: 79590

PART DESCRIPTION : 27713-1 CUP REV.A

SUPPLIER FJO NO. : 18671

QUANTITY SHIPPED : 1,085

SHIPMENT DATE : 06/14/91

WE CERTIFY THAT ALL ITEMS SHIPPED ON THIS ORDER MEET THE REQUIREMENTS OF THE PURCHASE ORDER AND APPLICABLE DRAWINGS/SPECIFICATIONS. RESULTS OF REQUIRED MECHANICAL, VISUAL, FUNCTIONAL AND CHEMICAL TESTS ARE ON FILE IN OUR QUALITY CONTROL DEPARTMENT.

SIGNED Jeanne Laflamme
Jeanne Laflamme
Quality Control Manager

630 HENRY ST. BOX 180
ROMA, NEW YORK 13440

SALES CODE
502016

37712

0 1 0 0 0 0 0 0

DATE	INVOICE NO
02/26/91	02740

INVOICE TO: VALENTINE TOOL & STAMPING, INC.
171 W MAIN ST
NORTON, MA 02766

ATTN: JEANNE LAFLAMME, Q.C. MGR.

SHIP TO: VALENTINE TOOL & STAMPING, INC.
171 W MAIN ST
NORTON, MA

CITY CLERK	INV. CLR.	INV. BASE OR REL.	PARTIAL COMPLETE	SHIPPED BY
16,154	040	06	COMP	R S S

MT NO	C	MM	P	S	DI	M1	CR NO
466709	07	34	012	006	01		

JE	WH	CB	CA

REQUIREMENTS BY:
BROKER NO 13428

COLOR CODE

02MM X 50.8MM	6245a	PREPAID COLLECT PREPAID	STRAPPING	PAPER WRAP	BOXES	CRATES	BOX
.04000 X 2.0000	9 5G MAX	COILS OR CUT COIL	440 LBS	GAUGE 3000	SKID SIZE	PKG WT	MASTERS	CORES
301 -001 +005 -005	MOD SLIT	LENGTH/SIZE 220 FTM 16 36		NUMBER	SPACING 3/4"	SKIDDED	BUNDLES	LABS
125 -025MM +127 -127MM						FLATNESS	OK	T-PCS

CLASS	ALLOY NO.
ALUM KILD	C-1006

[redacted]

TEST REPORT

16,154

Certificate of Compliance

TEST:
Notary Public, Oneida County
My commission expires 1/31/92
DATE 2/27/91

I certify that the above figures are a true and correct copy of those contained in the records of this corporation.

ROME STAMP STEEL CO., INC.

9205

TI-NHTSA 005855

ZONE	LTR	REVISIONS DESCRIPTION	DATE	APPROVED
	B	ADDED NOTE 10. CHANGE "SEE NOTE 10" TO 3 PL., MAX. FILLET .083" TO "R.010 MAX. 2-PL.", "[illegible]" TO "[illegible]" IN 3-PL. ALSO "R.010 MAX. SEE NOTE 10" TO "[illegible]"	3-11-91	SO

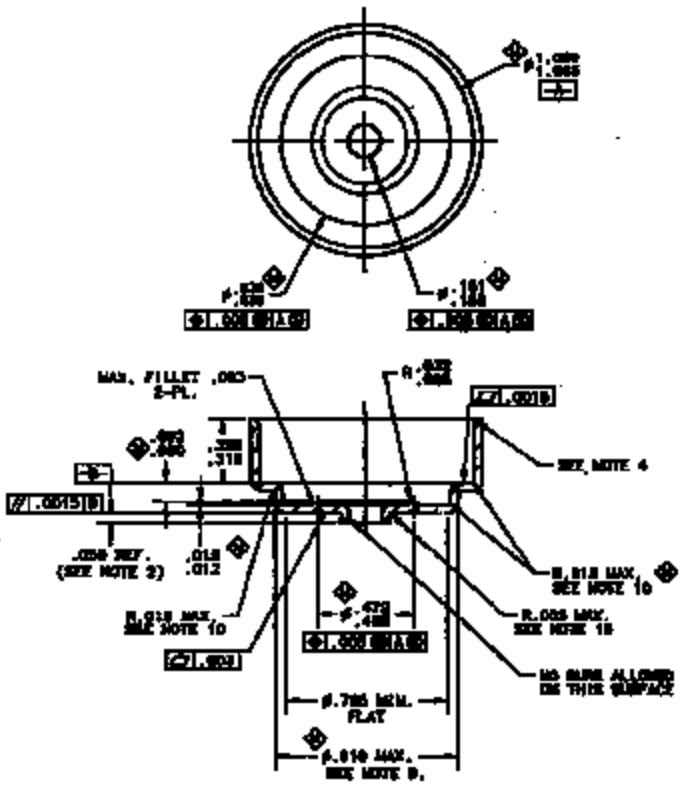

NOTES:
1. .002 MAX. BURR ALLOWED, EXCEPT WHERE INDICATED.
2. .156-.161 Ø MUST BE MAINTAINED THRU .038 MIN..
3. DIMENSIONS APPLY AFTER PLATING.
4. PINCH OFF RADIUS ALLOWED.
5. PARTS TO BE SHIPPED, LABELED, AND STORED IN SEALED PLASTIC BAGS.
6. ALL CONTAINERS OF PARTS MUST BE DATE CODED. DATE CODE IS TO REFLECT ANY MATERIAL, LOT, TOOL OR PROCESS CHANGE.
7. THIS PART IS LOT CONTROLLED. ANY PROCESS CHANGE, NEW SET-UP, PUNCH CHANGE, MAJOR TOOL WORK OR MATERIAL LOT CHANGE WILL SIGNIFY START OF A NEW LOT. EACH LOT WILL HAVE TI'S OWN PACKING SLIP WITH LOT IDENTIFICATION. PALLETIZED LOTS REQUIRE ONE SKID FOR EACH LOT.
8. MATERIAL CERTIFICATION REQUIRED WITH EACH SHIPMENT.
9. .038 - .041 THICKNESS SHOULD NOT APPLY IN THIS AREA DUE TO WALL THINNING DURING FORMING.
10. EFFECTIVE RADIUS. NO MATERIAL MAY PENETRATE BEYOND THE THEORETICAL BOUNDARY ESTABLISHED BY THE GIVEN RADIUS.

CERTIFIED PRINT
ENG. STD. E9898 REV. E
DATE JULY 1991

PART NO	MATERIAL	THICKNESS	FINISH
27713-1	#1010 OR #1008 D.R.S.	.038-.041	ZINC PLATING W/YELLOW CHROMATE .0002-.0004 THICK

THIS DWG. SUPERSEDES 27713 REV. "A" DATED 11-3-80

TEXAS INSTRUMENTS

TITLE: CUP

SIZE	DWG. NO.	
B	82647	27713

TI-NHTSA 005858

September 25, 1991

To: Donna Moynihan 12-27

From: Beth Kill 10-16

Subject: Material Confirmation
TSL Request # 110832

Sample Description:

P/N 74176-1 Seal Teflon and Kapton

Results:

DSC results confirm the presence of Teflon by the characteristic melt point at 316 - 319 degrees C.

Kapton is confirmed in the seal by the IR scan. It shows the same characteristic absorbances exhibited by the sample known to be Kapton. See the enclosed scan.

Finally, the Teflon is confirmed to be on the surface of both sides of the seal by EDAX analysis.

Regards,

Beth X3069

Sample: 79479-1 KAPTON TAPE
Size: 3.3800 mg
Method: KAPTON
Comment: TMLP 110888 2B2R DUAL

DSC

File: DKAPTON.08
Operator: K HOBB
Run Date: 09/25/91 08:18

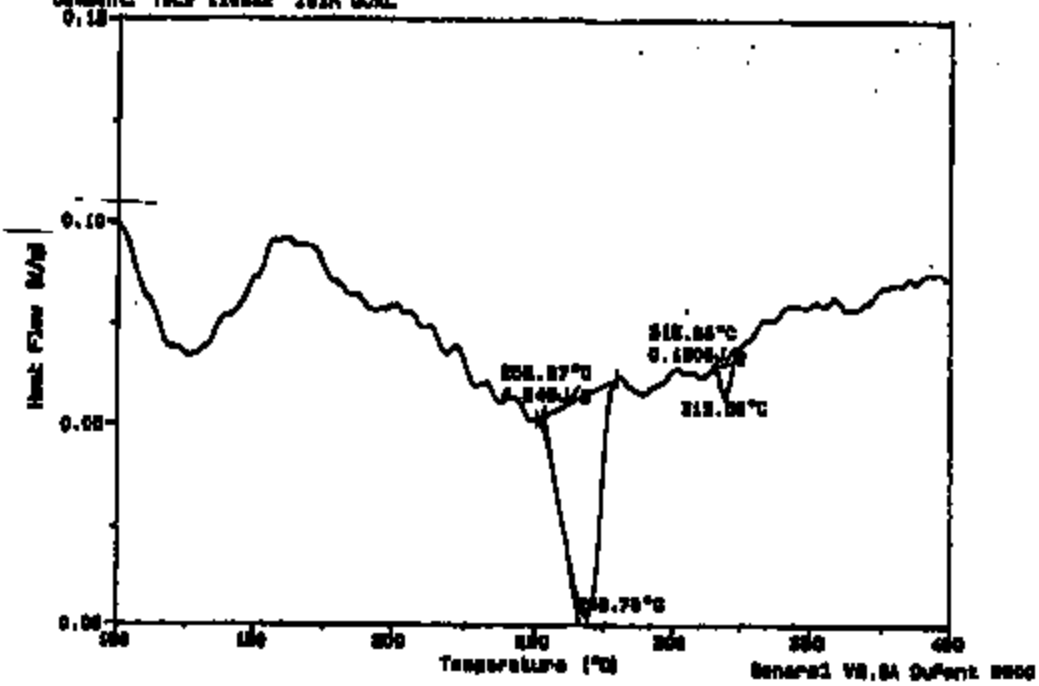

Sample: 79479-2 KAPTON TAPE
Size: [illegible]
Method: KAPTON
Comment: TMLP 110888 2B2R DUAL

DSC

File: DKAPTON.10
Operator: K HOBB
Run Date: 09/25/91 08:18

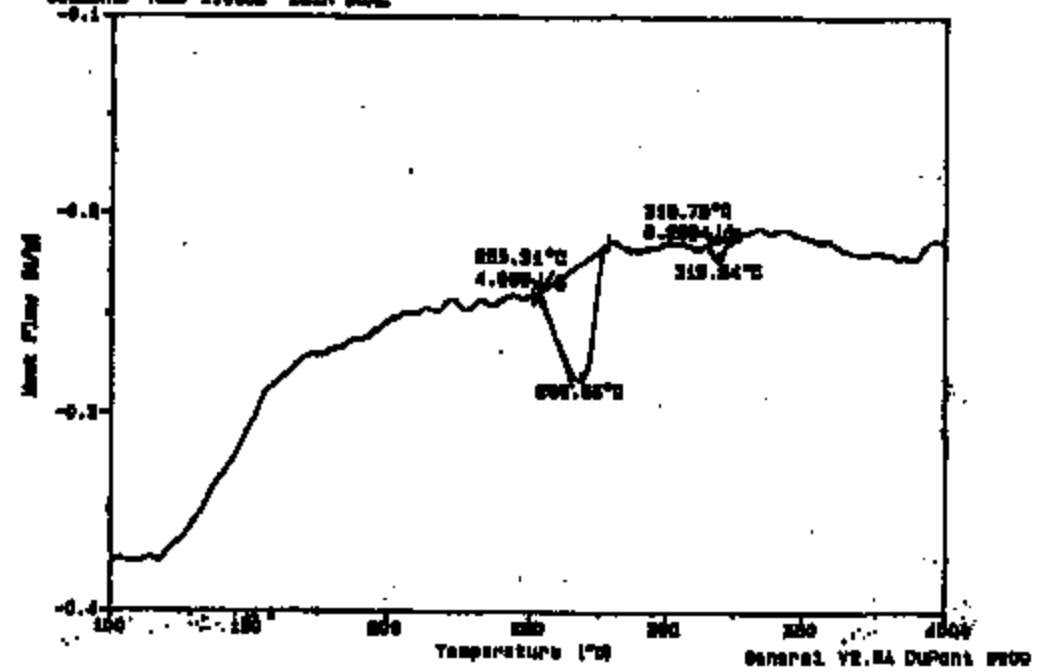

NO. 007-1493

PERKIN-ELMER

CONCENTRATION
THICKNESS
PHASE
REMARKS

SCAN MODE: ACCY. ☐ SURVEY ☐ HI ENERGY ☐ CAL. ☐ RESOLUTION ☑

OPERATOR: EK DATE: 9/23/91

SPECTRUM NO.
SAMPLE: 110932 Kapton - Teflon
ORIGIN

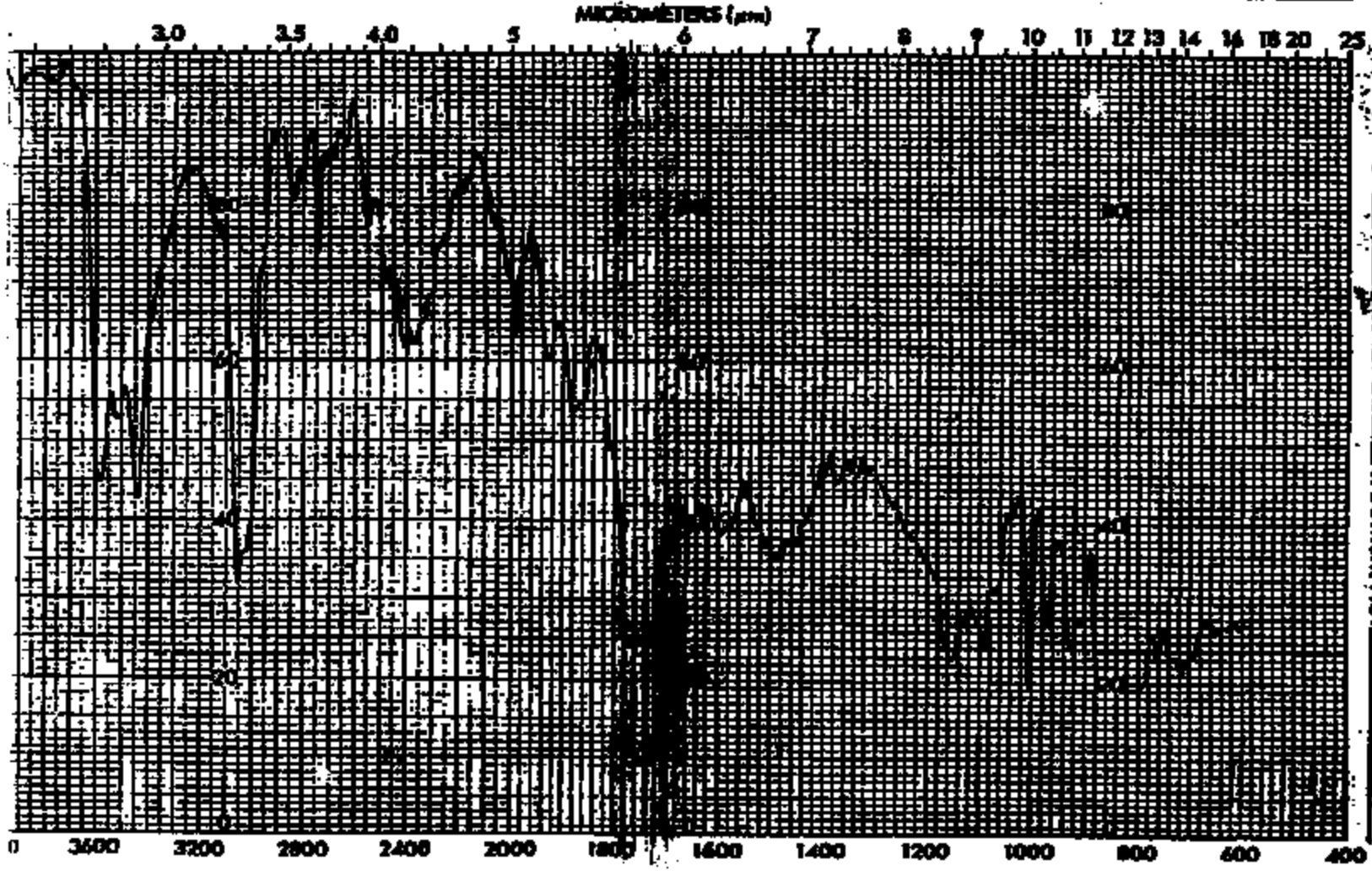

SPECTRUM NO.

TI-NHT9A 008899

NCENTRATION
CKNESS
ASE
MARKS

SCAN MODE ACCY. ☐ SURVEY ☐
HI ENERGY ☐ CAL. ☐
RADIATION ☑
OPERATOR JS DATE 5/6/92

SPECTRUM NO.
SAMPLE DUPONT KAPTON
100FN099
ORIGIN

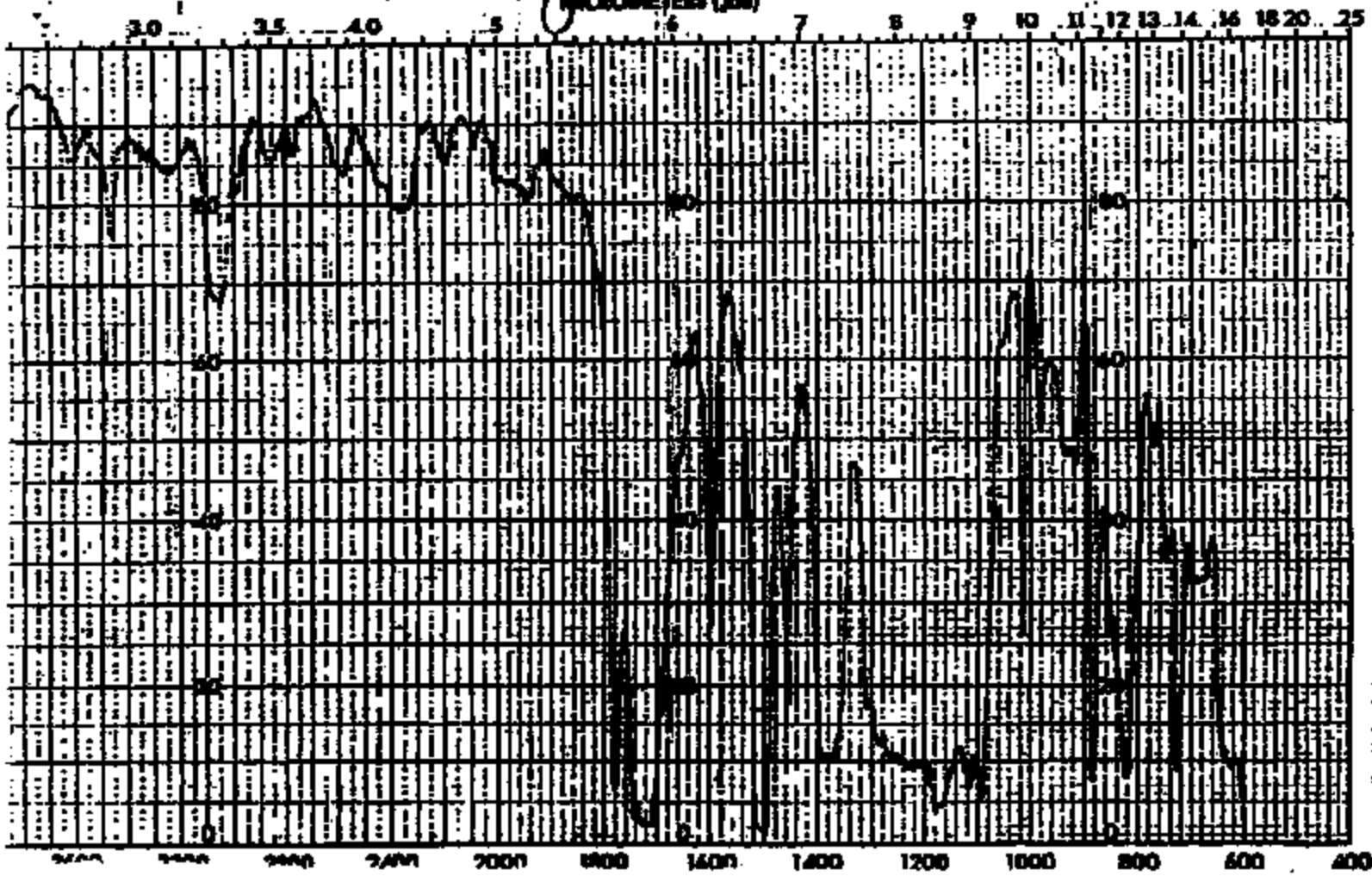

SAMPLE
SPECTRUM NO.

09.25.91 10:37 AM

P05

TI-NHTSA 008980

TITLE SEAL

REV. B 74176

74176

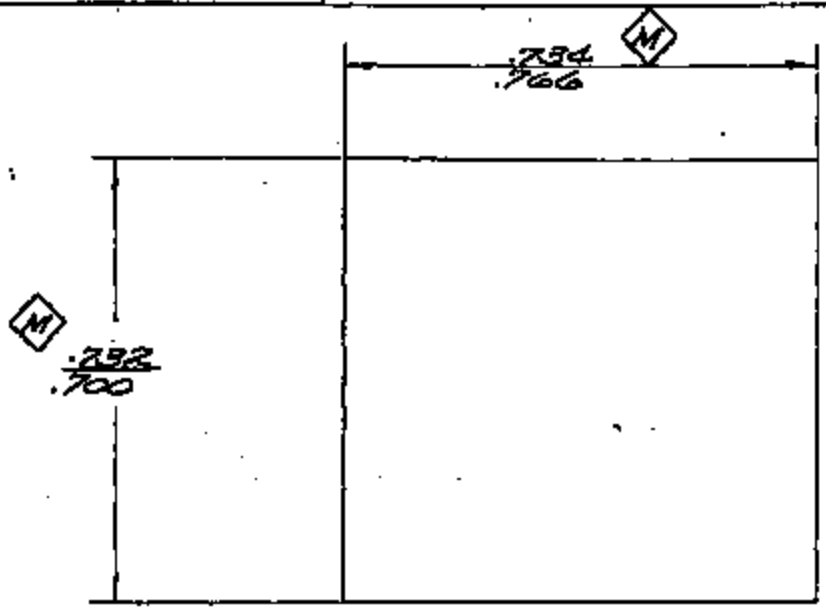

.0015
.0025

NOTE:
1.001 MAX. BURR ALLOWED

CERTIFIED PRINT
Parts Made To This Print Meet Requirements
ENG. STD. E9898 REV. E
Date JUL 1 1991

74176-1	MAKE FROM 27225-1 (STRIP)													
PART NO.	MATERIAL													
						V.S.			Q.H.	R.J.H.	M.P.	P.S.T.	P.S.T.	P.S.T.

BY	2-1-94	TEXAS INSTRUMENTS INCORPORATED ATTLEBORO, MASS., U.S.A.	KELSON CONTROL PRODUCTS DIVISION	A	74176
CK.	K.H. Wenner 2-11-94				
ENG.	D. Stott 2/13/94				

REVISIONS				
ZONE	LTR	DESCRIPTION	DATE	APPROVED
	H	[illegible]	[illegible]	[illegible]

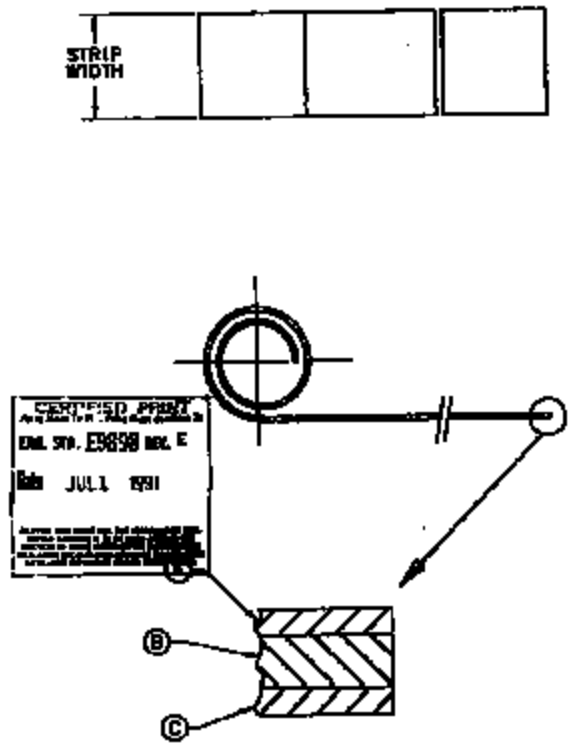

NOTES:

1. STRIP TO BE INSPECTED FOR TEFLON COATING, THICKNESS, DEFORMITIES, BUBBLES, AND LAMINATE SEPARATION.
2. EACH KAPTON STRIP ROLL MUST BE LABELED WITH T.I. PART NO. ON INSIDE OF CORE.
3. NO MORE THAN 2 SPLICES PER COIL PERMITTED. SPLICES TO BE CLEARLY MARKED WITH YELLOW MYLAR.
4. MATERIAL CERTIFICATION REQUIRED WITH EACH SHIPMENT.
5. ROLLS SLITTED FROM END OF MASTER COIL NOT ACCEPTABLE.
6. BUCKLING OF THE CORE ALLOWED UP TO 1/4" MEASURED RADIALLY AWAY FROM THE CORE.
7. DENT RIP OR JAGGED EDGES ON MATERIAL NOT ALLOWED.
8. ROLLS ARE TO BE SHIPPED WITH PROTECTIVE INSERT CORES IN THE PACKING BOX.

THIS DWG. SUPERSEDES 27225 REV. "H" DATED 12-13-89

PART NO.	MATERIAL	THICKNESS (MILS)	TOLERANCE (A)	TOLERANCE (B)	TOLERANCE (C)	STRIP WIDTH (IN.)	PAPER CORE I.D. (I.D.) (IN.)	CORE MATERIAL
			CONSTRUCTION CHILD (SEE NOTE 3)					
[illegible]	[illegible]	2 x 4.4 MILS	0.5	2	0.2	.[illegible]-.[illegible]	3 x 3 1/2	PLASTIC (WHITE)
[illegible]	[illegible]	3 x 4.5 MILS	1	2	1	.[illegible]-.[illegible]	3 x 3 1/2	CARDBOARD
[illegible]	[illegible]	3 x 4.5 MILS	1	2	1	.734-.[illegible]	3 x 3 1/2	CARDBOARD

TOM BALL	11-1-88	TEXAS INSTRUMENTS	XEROX
[illegible]	6-22-90	KAPTON STRIP SPECIFICATION	
		B	82647	27225

TI-NHTSA 005862

DIEMASTERS

CERTIFICATE OF CONFORMANCE

SHIP TO: TEXAS INSTRUMENTS

FROM
Diemasters Manufacturing, Inc.
767 Industrial Drive
Elmhurst, Illinois 60126

DATE SHIPPED: 6/18/91 PURCHASE ORDER #: 5000103

SHIPPING OR INVOICE NUMBER: 00184

MATERIAL TRACE NUMBER (P.O. # HEAT, LOT, OR ROUTE SHEET NUMBER): 65-7196

QUANTITY SHIPPED: 75,790

PART NUMBER: 27639-1 REVISION: D

PART DESCRIPTION: WASHER

OPERATION PERFORMED: MANUFACTURING

SPECIFICATION: 27639-1 REVISION: D

THE MATERIAL DESCRIBED ABOVE WAS PROCESSED, INSPECTED AND FOUND TO CONFORM TO THE DRAWING(S) AND SPECIFICATION(S) LISTED.

QUALITY CONTROL 08-14-91 DATE

ENCLOSURES: ☒ CERTIFICATE OF RAW MATERIAL TRACEABLE LOT# 79

☐ INDEPENDENT LABORATORY TEST REPORT OF RAW MATERIAL

☐ INSPECTION REPORT(S)

☒ SUB ~~PLATING~~ HEAT-TREAT SUPPLIER'S CERTIFICATION(S) OF CONFORMANCE

☐ FORM _____ NON-CONFORMANCE RELEASED BY: _____

☐ REWORK EXPLANATION

RIVERDALE PLATING & HEAT TREATING, INC.

550 West 134th Street Riverdale, Illinois 60627-1194

TELEPHONES
(708) 849-2056
(312) 568-2400

GENMASTERS MANUFACTURING, INC.
757 INDUSTRIAL DR
ELMHURST IL 60126-1525

27639-1

JUN - 3 1991

THIS IS TO CERTIFY THAT THE PARTS, FURNISHED AGAINST THE LISTED PURCHASE ORDER, WERE PROCESSED IN ACCORDANCE TO SPECIFICATION.

133431	I08667	AUSTENPER TO RC 40-55	74,515	1,559	5/29/91
133431	I38657	ZINC .0002 - .0006	74,515	1,559	5/29/91

Subscribed and sworn to before me

THIS 29 DAY OF MAY , 1991

Lynnel O. Engelman
Notary Public

"OFFICIAL SEAL"
Lynnel O. Blyntsem
Notary Public, State of Illinois
My Commission Expires 7/20/92

RIVERDALE PLATING & HEATING TREATING, INC.

Alfred K. Nelson
Vice President

TI-NHTSA 008884

[redacted] that material meets ordered specification

Size
1 3/8 X 098
PO Number
021540
MR Number
62276

Bally Diameters

TEXAS INSTR.
27639-1

QUALITY CONTROL
APR 30 1991
R. BALLO

Heat						AISI			Rockwell		
657196						C-1050			B 74/78		
%C	%Mn	%P	%S	%Si	%Ni	%Cr	%Mo	%Al	%Cu	%V	%Cu
52	78	015	008	23							

Tensile Strength (psi)	.2% Yield Strength (psi)	% Elongation in 2"

Surface	Inclusion Rating	Grain Size

Decarburization	Microstructure

Cold Bend
Parallel to the rolling direction over a — Radius Bend
Perpendicular to the rolling direction over a — Radius Bend

Hardenability	Miscellaneous

I certify that the above data is correct

Date 4/24/91

Notary Public, State of New York County of Oneida

My commission expires

ROME STRIP STEEL

530 Henry St.
Rome, NY 13440

315-336-5500
FAX 315-336-5510

TI-NHTSA 005885

ZONE	LTR	REVISIONS DESCRIPTION	DATE	APPROVED
	B	[illegible]	[illegible]	[illegible]

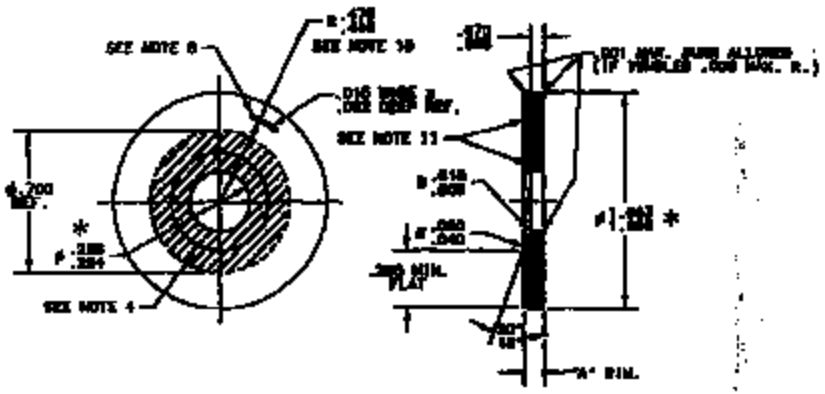

NOTES:

1. PART MUST BE FLAT TO WITHIN .006 T.I.R..
2. DIAMETERS MARKED WITH * MUST BE CONCENTRIC TO WITHIN .004 T.I.R..
3. PARTS TO BE SHIPPED, ISSUED, AND STORED WITH APPLIED RUST PREVENTIVE BEFORE PLATING. AFTER PLATING, PARTS TO BE SHIPPED, ISSUED, AND STORED IN SEALED PLASTIC BAGS.
4. NO TOOL MARKS ALLOWED IN THE SHADED AREA ON BEVELED SIDE OF WASHER.
5. THE PARTS HARDNESS IS MEASURED AFTER A .005-.010 THICK SKIN IS REMOVED.
6. THIS PART IS LOT CONTROLLED. ANY PARTS CHANGE, NEW SETUP, PUNCH CHANGE, DIE TOOL TOOL OR MATERIAL LOT CHANGE WILL IDENTIFY START OF A NEW LOT. NO MINIMUM LOT SIZE. EACH LOT WILL HAVE A LOT NUMBER. EACH LOT WILL BEING IT'S OWN PACKING SLIP WITH LOT IDENTIFICATION.
7. MATERIAL CERTIFICATION REQUIRED WITH EACH SHIPMENT.
8. STAMP IDENTIFICATION CODE AS REQUIRED TO IDENTIFY SUPPLIER TOOL. CODE WILL BE CLEARLY VISIBLE AFTER PLATING. NO BURR OR SHARP EDGES PERMITTED.(-6 ONLY)
9. DIM. "A" TO BE MEASURED WITH STANDARD WASHER GAUGE.
10. IDENTIFICATION BURRS ALLOWED BETWEEN .410-.470R..
11. THESE SURFACES MUST BE SMOOTH AND FREE OF ANY PLATING IMPERFECTION OR INCLUSIONS. (i.e. NO FROSTED EFFECTS OR PARTICULATE CONTAMINATION IN THE PLATING.)

THIS DWG. SUPERSEDES 27639 REV. "C" DATED 3-28-90

CERTIFIED PRINT
DWG. NO. 27639 REV. E
Date JUL 3 1991

PART NO	MATERIAL	FINISH	HEAT TREAT	"A" DIM.
27639-1	1050 CRS	ZINC PLATE .0002 - .0008 THK	HEATREAT TO ROCKWELL 040-65	.087 - .101

TEXAS INSTRUMENTS

WASHER

B 82647 27639

TI-NHTSA 005868

K. F. BASSLER COMPANY, INC.
PRECISION TOOLING & METAL STAMPINGS
45 John William St. • Attleboro, MA 02703 • (508) 222-1061 • Fax: (508) 226-1605

EST. 1948

MATERIAL CERTIFICATION

CUSTOMER: Texas Instruments, Inc. - Attleboro

CUSTOMER ORDER NO.: 505047078

CUSTOMER PART NO.: 27406-1

REVISION: F

QUANTITY THIS SHIPMENT: 21,000

LOT NO. THIS SHIPMENT: 143

SHIPMENT DATE: 6.25.91

WE CERTIFY THAT THE MATERIAL USED TO PRODUCE THE PRODUCT IN THIS SHIPMENT, NAMELY, AK 1008 C.R.S., CONFORMS TO TI's DRAWING AND PURCHASE ORDER REQUIREMENTS.

AUTHORIZED SIGNATURE: Kathleen A. Penkala
Kathleen A. Penkala
Inside Sales Specialist

PMA PRECISION METALFORMING ASSOCIATION

TELEX [redacted]
FAX [redacted]
PHONE 315-336-3500
DUNS 223-3190

ROME STRIP STEEL COMPANY, INC.
530 HENRY ST. BOX 189
ROME, NEW YORK 13440

COMPUTER

SALES CODE
0807/2016

0 1 0 0 0 0 0 0

DATE	INVOICE NO.
02/28/91	02786

INVOICE TO: K. F. BASSLER CO., INC.
P. O. BOX 995
ATTLEBORO, MA 02703

SHIP TO: K. F. BASSLER CO., INC.
13TH-JOHN WILLIAM STS
ATTLEBORO, MA

QUANTITY (LBS)	NO CLS	NO SHTS OR BDLS	PARTIAL COMPLETE	SHIPPED BY	HT NO	C	MN	P	S	SI	NI	CR	MO
19,636	135	13	PART	PAUL M	466708	07	36	014	008	01			

AL	VN	CB	CA

MEETS REQUIREMENTS OF:
CUST. ORDER NO. 14474

COLOR CODE

[redacted]17MM X 25.40MM

PILL NO	PREPAID COLLECT	STRAPPING	PAPER WRAP	BOLS	CRATES	BOX
58100	PREPAID					

TEMPER	COIL OR CUT	SHIPS	SKID SIZE	PKG. WT	WAFERS	CORES
B 50 MAX	COIL	1600		21 MI MAX		

.04600 X 1.0000

TOLERANCE	FORM	LENGTH SPEC	NUMBERS	SPACERS	SHROUD	BOARDS	CAPS
+00050-00050+005 -005	N03 SLIT	200 PIN 16 34					

ZINC	CAMBER	FLATNESS	OIL	T-PCS
ALUM-KYCO	500/096"			

+013 -013MM +127 -127MM

[redacted]

TEST REPORT

(8,907 X61 19,636

Certificate of Compliance

ATTEST: [signature]
032 04280 32 020291
Notary Public, Oneida County
My commission expires 3/1/92

DATE 3/1/91

I certify that the above figures are a true and correct copy of those contained in the records of this corporation.

[signature]
ROME STRIP STEEL CO., INC.

TI-NHTSA 005868

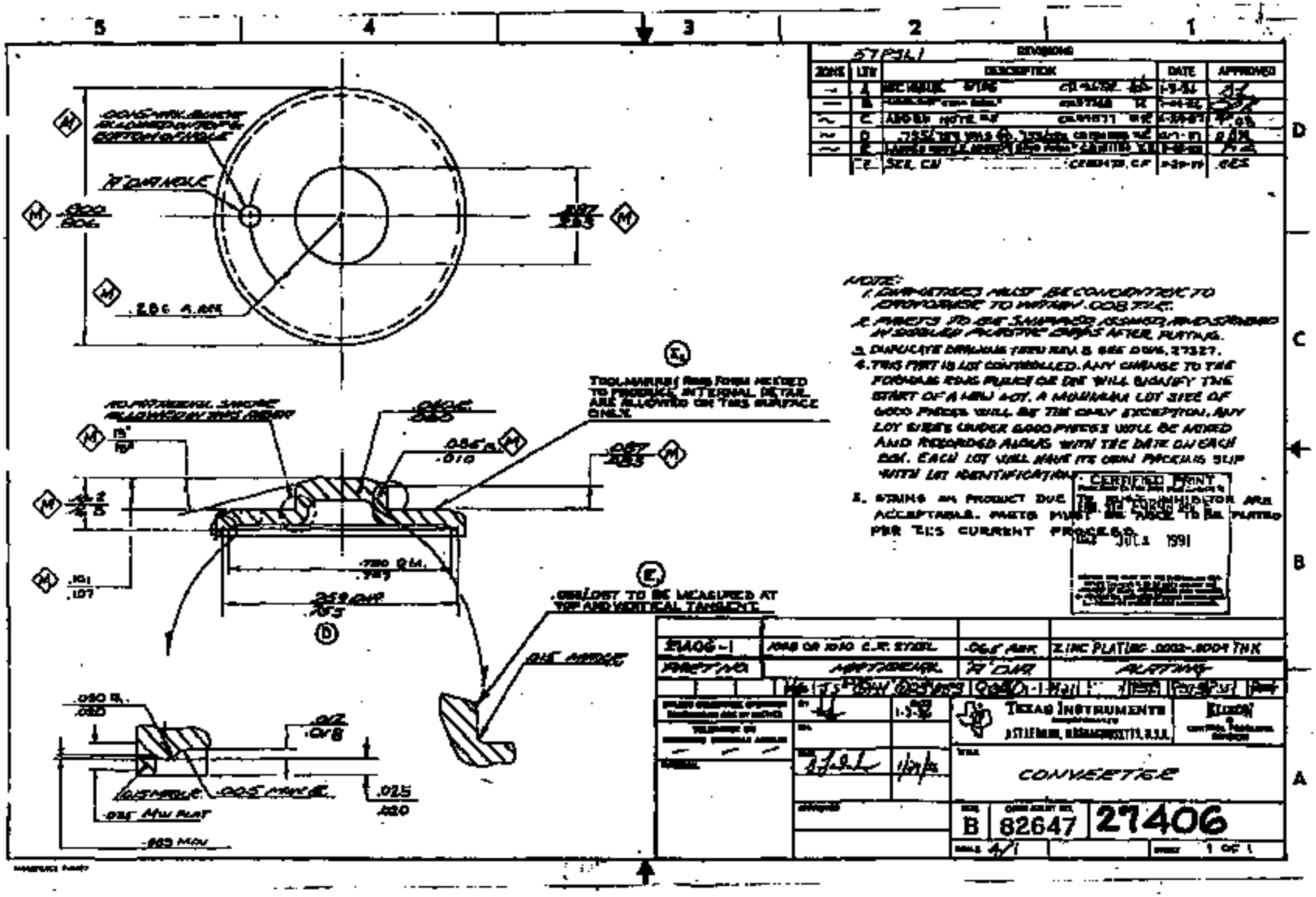

TI-NHTSA 005969

Insulfab PLASTICS, INC.

PLASTIC FABRICATORS DIVISION
158 NO. MAIN STREET, FRANKLIN, N.H. 03235
603-934-2770

CERTIFICATE OF CONFORMANCE

TO: TEXAS INSTRUMENTS DATE: JUN 3 1991

ATT: QUALITY CONTROL SUP.

THIS CERTIFIES THAT:

SHIPMENT # 159462

PART # 73958-1 REVISION 6

QUANTITY 122,000

MAT'L DESC. Kapton HN

IS IN CONFORMANCE WITH THE REQUIREMENTS, SPECIFICATIONS, AND DRAWINGS ON YOUR ORDER # 00N168201866

BY: INSULFAB PLASTICS
FRANKLIN, NH 03235

Fred Vuyny
QUALITY CONTROL MANAGER

BAKELITE MELAMINE SILICONES FORMICA

OLEOPHOBITONE AND FABRICATIONS OF
TEFLON · TELEF · FORMICA · PLEXIGLAS · POLYSTYRENE · NYLON · PAPER · VINYLITE

TI-NHTSA 005870

SPACER | REV. G | 73958

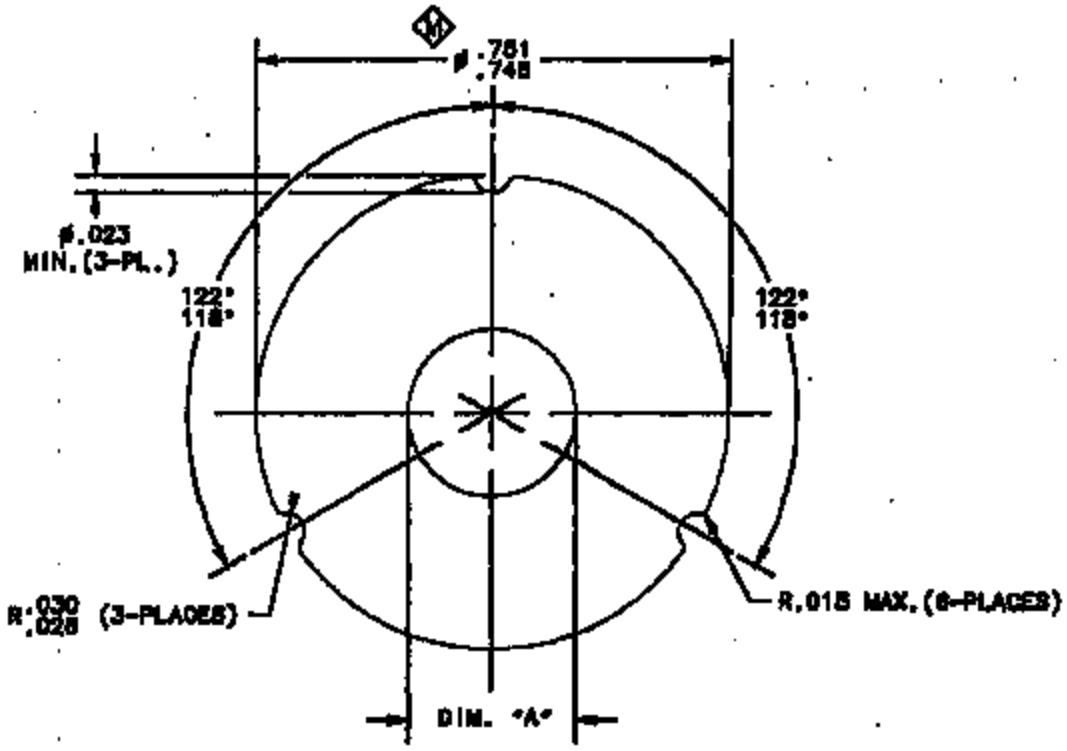

NOTES:

1. .001 MAX. BURR ALLOWABLE.
2. PARTS TO BE SHIPPED, ISSUED, AND STORED IN SEALED PLASTIC BAGS.
3. ALL CONTAINERS OF PARTS MUST BE DATE CODED. DATE CODE IS TO REFLECT ANY MATERIAL LOT, TOOL OR PROCESS CHANGE.
3. MATERIAL CERTIFICATION REQUIRED WITH EACH LOT.

CERTIFIED PRINT
ENG. STD. E9898 REV. E
Date JUL 1 1991

73958-3	MADE FROM 74224-1 (KAPTON TAPE)	NO HOLE
73958-2	DUPONTS, KAPTON 200H, .0017 - .0023 THICK	NO HOLE
73958-1	KAPTON .0017 - .0023 THICK	.260/.270
PART NO.	MATERIAL	DIM "A"

THIS DWG. SUPERSEDES 73958 REV. "F" DATED 10-14-86

BY TOM DAIL 10-10-86
CH.
DES. 10/16/86
MARKPLACE

TEXAS INSTRUMENTS
ATTLEBORO, MASSACHUSETTS 02703

KLIXON
CONTROL PRODUCTS DIVISION

SIZE A

73958

TITLE	REV.	
KAPTON TAPE	F	74224

74224

NOTES:

1. ROLLS SLITTED FROM ENDS OF MASTER COIL NOT ACCEPTABLE.
2. BUCKLING OF THE CORE ALLOWED UP TO 1/4" MEASURED RADIALLY AWAY FROM THE CORE.
3. DENTS, RIPS, OR JAGGED EDGES ON MATERIAL NOT ALLOWED.
4. ROLLS ARE TO BE SHIPPED WITH PROTECTIVE INSERT CORES IN THE PACKING BOX.

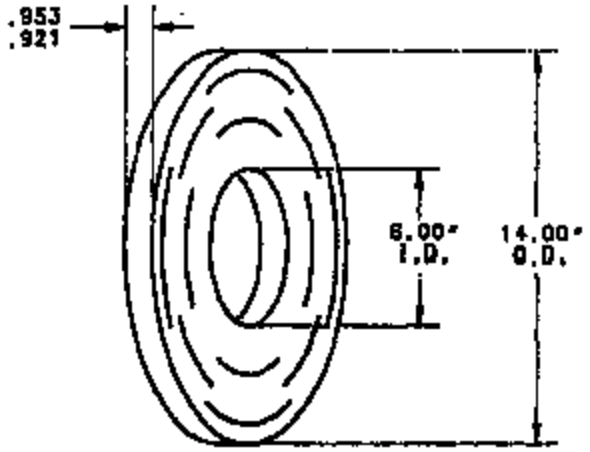

CERTIFIED PRINT
Parts Made To This Print Must Conform To
ENG. STD. E9898 REV. E
Date NOV 22 1991

PART NUMBER	MATERIAL	THICKNESS
74224-1	DUPONTS, KAPTON 200H	.0017/.0023

THIS DWG. SUPERSEDES 74224 REV. "E" DATED 10-14-88

BY TOM DAILY 10-14-88	TEXAS INSTRUMENTS ATTLEBORO, MASSACHUSETTS 02703	KIDDON	A	74224
CK.				
ENG. 10-16-90				

TI-NHTSA 005872

VALENTINE TOOL & STAMPING, INC.

111 WEST MAIN ST. NORTON, MASS. 02766
- (508) 285-0911

MATERIAL CERTIFICATION

DATE : TUESDAY APRIL 30, 1991

CUSTOMER : TEXAS INSTRUMENTS INC

CUSTOMER P.O. NO : 5C5C63[illegible] SUPPLIER INVOICE NO.: [illegible]

PART DESCRIPTION : 74987-1 CRIMP RING REV.B

SUPPLIER PJO NO. : 18[illegible]

QUANTITY SHIPPED : 20,449

SHIPMENT DATE : 04/30/91

WE CERTIFY THAT THE MATERIAL USED
TO PRODUCE THE PRODUCT IN THIS
SHIPMENT, NAMELY
[illegible] 5052 AL [illegible]
CONFORMS TO T.I. DRAWINGS AND
T.I. PURCHASE ORDER REQUIREMENTS.

SIGNED Jeanne LaFlamme
(Supplier Representative)

Jeanne LaFlamme Quality Control Manager

VALENTINE TOOL & STAMPING, INC.

191 WEST MAIN ST., NORTON, MASS. 02766
(508) 285-6011 226-0343

CERTIFICATE OF CONFORMANCE

DATE : TUESDAY APRIL 30, 1991

CUSTOMER : TEXAS INSTRUMENTS INC

CUSTOMER P.O. NO : 505063716 SUPPLIER INVOICE NO.: 19519

PART DESCRIPTION : 74797-1 CRIMP RING REV.B

SUPPLIER PJO NO. : 18573

QUANTITY SHIPPED : 20,449

SHIPMENT DATE : 04/30/91

WE CERTIFY THAT ALL ITEMS SHIPPED ON THIS ORDER MEET THE REQUIREMENTS OF THE PURCHASE ORDER AND APPLICABLE DRAWINGS/SPECIFICATIONS. RESULTS OF REQUIRED MECHANICAL, VISUAL, FUNCTIONAL AND CHEMICAL TESTS ARE ON FILE IN OUR QUALITY CONTROL DEPARTMENT.

SIGNED Jeanne LaFlamme
Jeanne LaFlamme
Quality Control Manager

TI-NHTSA 005874

UNITED ALUMINUM CORPORATION

100 UNITED DRIVE • NORTH HAVEN, CONNECTICUT 06473 • (203) 239-5881

UNITED ALUMINUM

9281

VALENTINE TOOL & STAMPING, INC.
171 WEST MAIN STREET
NORTON, MA 02766-0469

ATTN: DICK WHITNEY

DATE 4/18/91
P.O. # 13876
SHIPPED 4/19/91
UA ORDER # 161499

THIS IS TO CERTIFY THAT THE MATERIAL LISTED BELOW CONFORMS WITH THE CHEMICAL COMPOSITION LIMITS OF QQA-250/8F AND THE FOLLOWING ARE THE LIMITS:

AA 5052

CHEMICAL COMPOSITION

	MIN.	MAX.
SILICON		0.25
IRON		0.40
COPPER		0.1
MANGANESE		0.1
MAGNESIUM	2.2	2.8
CHROMIUM	0.15	0.35
ZINC		.25
TITANIUM		
OTHER ELEMENTS (EACH)		.05
OTHER ELEMENTS (TOTAL)		.15
ALUMINUM	REMAINDER	

MECHANICAL PROPERTIES

TENSILE STRENGTH	28.5 KSI
ELONGATION IN 2"	20%

..032 2.312 5052-0

UNITED ALUMINUM CORPORATION

TITLE

CRIMP RING

REV. B

74797

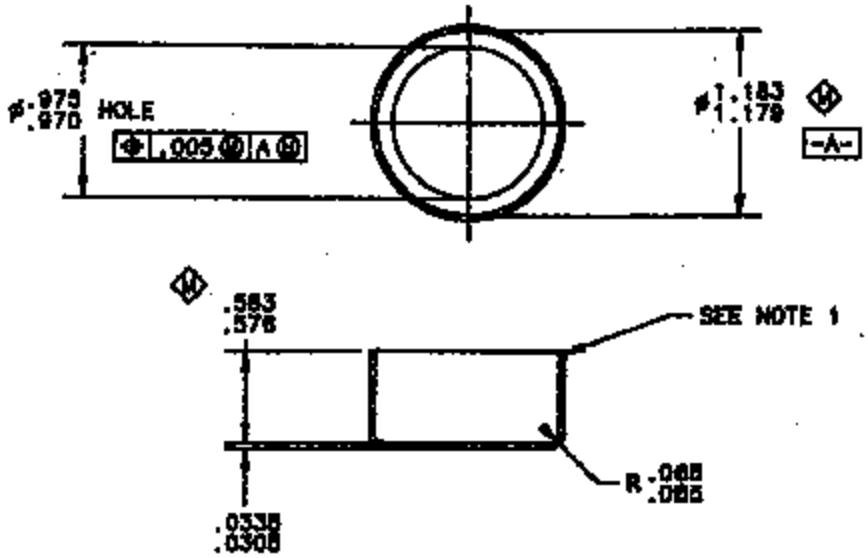

NOTES:
1. PINCH OFF RADIUS ALLOWED.
2. .002 MAX. BURR ALLOWED.
3. PARTS TO BE SHIPPED, ISSUED, AND STORED IN SEALED PLASTIC BAGS.
4. MATERIAL CERTIFICATION REQUIRED WITH EACH SHIPMENT.

CERTIFIED PRINT
Parts Made To This Print Meet Requirements Of
ENG. STD. E9898 REV. E
Date JUL 1 1991

SUPERSEDES DWG. 74797 REV. A DATED 11-2-90

PART NO.	MATERIAL	FINISH
74797-1	ALUMINUM 6062	

DR. 11-2-90
CK. 1-30-91
ENG.
MANUFACTURE

TEXAS INSTRUMENTS
ATTLEBORO, MASSACHUSETTS 02703

KLIXON
CONTROL PRODUCTS DIVISION

SIZE A

DWG. NO. 74797

Paratech, Inc.

A SUBSIDIARY OF [illegible]
MINIATURE TECHNICAL CERAMICS

13940 MINNESOTA AVENUE • P.O. BOX 718 • PARAMOUNT, CALIFORNIA 90723
TELEPHONE (213) 633-2048 • FAX (213) 633-6907

MATERIAL CERTIFICATION

DATE: 4-22-91

TEXAS INSTRUMENTS, INC.

ORDER NO.: 505049981

PART NO : 74078-146 REV. NO.: F

QUANTITY THIS SHIPMENT: 75,000

SHIPMENT DATE: 4-22-91

PART DESCRIPTION: PIN

WE CERTIFY THAT THE MATERIAL USED TO PRODUCE THE PRODUCT IN THIS SHIPMENT, NAMELY PIN / STEATITE - L3, CONFORMS TO T.I. DRAWING AND T.I. PURCHASE ORDER REQUIREMENTS.

PRODUCTION MANAGER

TRANSFER PIN 74078

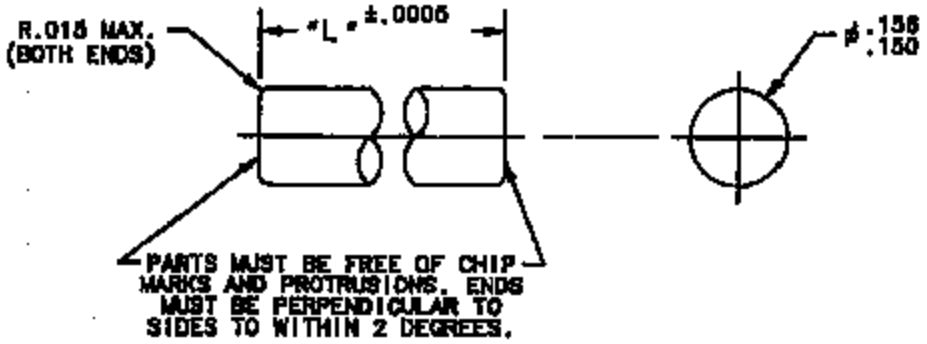

"L" LENGTH IS DETERMINED BY THE SUFFIX OF THE PART NUMBER IN THOUSANDTHS OF AN INCH. I.E.;

PART NO.	"L"
74078-156	.156
74078-210	.210

VENDOR WILL BE PREPARED TO FURNISH PINS .130 - .250 LONG.

NOTES:

1. FINISHED PARTS TO BE SHIPPED, ISSUED AND STORED IN SEALED PLASTIC BAGS. SEALED PLASTIC BAGS TO CONTAIN 20,000 PINS(OR LESS FOR PARTIAL BAGS). BAGS MUST BE CLEARLY LABELED WITH THE PART NO. AND THE QUANTITY OF PARTS IDENTIFIED ON THE OUTSIDE OF EACH BAG.
2. MATERIAL CERTIFICATION REQUIRED WITH EACH SHIPMENT.

MATERIAL: L-3 GRADE STEATITE (DC-1665) OR
L-3 GRADE STEATITE (DO-144E)

CURE PER SPEC.——— 50502-2

SHRINKAGE SPEC.——— 50501-1

CERTIFIED PRINT
Parts Made To This Print Meet Contract No
ENG. STD. E9898 REV. E
Date JUL 1 1991

THIS DWG. SUPERSEDES 74078 REV. "E" DATED 8-4-88

													D13	Q1	M2/P37-3/93

BY TEM DATE 10-17-88
CHL
ENG. 5-20-91
MANUFACTURE

TEXAS INSTRUMENTS
ATTLEBORO, MASSACHUSETTS 02703

KIDXON
CONTROL PRODUCTS DIVISION

SIZE A

DWG. NO. 74078

CODE IDENT NO. 82647

TI-NHTSA 005876

[illegible]

TEXAS INSTRUMENTS, INC.
P.O. BOX 444
ATTLEBORO, MA 02703

PARKER HANNIFIN CORPORATION
J.A.L. DIVISION
WEST MAPLE STREET
WHITEHALL, N.E. [illegible]
TELEPHONE ([illegible]) [illegible]-[illegible]

J.A.L. Division of Parker Seal certifies that the material used to produce the product in this shipment, namely SILICONE/ [illegible]. Conforms to TI drawing and TI purchase order requirements.

PART TITLE... ENVIRONMENTAL SEAL

CUST P/N... [redacted] REV A DATE SHIPPED P/N... [illegible]

J.A.L. P/N... [illegible] 10-21-[illegible] S/N... [illegible]-1

SILICONE COMPOUND... [illegible] QUANTITY... [illegible]

Very truly Yours,
J.A.L. Division

[illegible] T. [illegible]
Quality Control Manager

[illegible]

TI-NHTSA 005679

DEVICE # 52/57PS
PROJ. # 3355

TITLE ENVIROMENTAL SEAL

REV E

74247

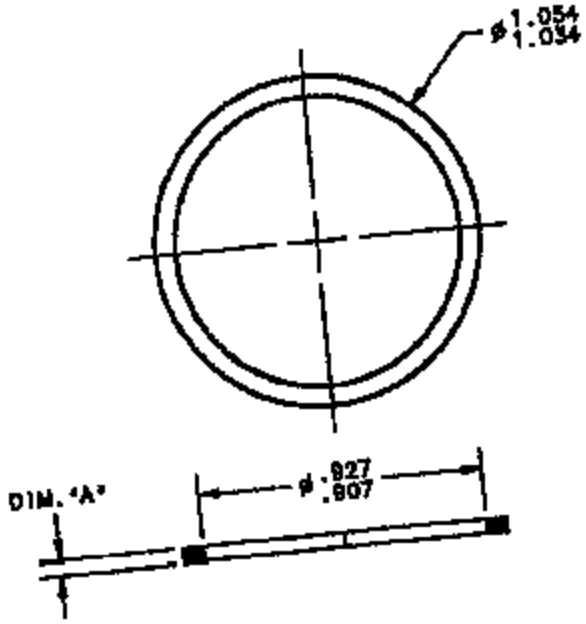

CERTIFIED PRINT
Parts Made To This Print Conform To
ENG. STD. E9898 REV. E
Date NOV 26 1991

NOTES:

1. MATERIAL CERTIFICATION REQUIRED WITH EACH SHIPMENT.
2. 74247-3 IS TO BE RED IN COLOR WITH 3 BLACK MARKS ON THE EXTERNAL CIRCUMFERENCE AT 120° INTERVALS.

THIS DWG. SUPERSEDES 74247 REV. "D" DATED 10-14-88

PART NO.	MATERIAL	DUROMETER	COLOR	DIM. "A"
74247-3	SILICONE JBL (T-8-D)	55 - 65	BLUE	.045-.055
74247-2	SILICONE JBL S7424-6	55 - 65	SEE NOTE 2	.045-.055
74247-1	SILICONE JBL S7424-6	55 - 65	RED	.040-.050
	BUNA N JBL N7014-50	50 - 60	BLACK	.040-.050

REVISED "-3, -4 AND NOTE 2. REVISED DIM. "A" TO TABLE. EL. 10-1-91

02-3 MS-9 013 01 M41 P37-3 P35

DRAWN TOM DAIL 8-19-91
CHK.
ENG.

TEXAS INSTRUMENTS
ATTLEBORO, MASSACHUSETTS 02703

Elastomer Products Division

SIZE A

74247

TI-NHTSA 00

kCap

CERTIFICATE OF CONFORMANCE

TO: TEXAS INSTRUMENTS
ATTLEBORO, MASSACHUSETTS

PURCHASE ORDER NUMBER: 5CCC23184

CUSTOMER PART NUMBER: 74179-2

PART DESCRIPTION: .342 - 3/8" THIK CCD

OUR JOB NUMBER: 163505-1

The supplier hereby certifies that adequate data is on file showing that all components and materials used in the article furnished comply with the physical and chemical properties required by our firm.

Roger J. Rinkus 5-31-91

Roger J. Rinkus
Quality Assurance Manager

A SINCLAIR & RUSH COMPANY
3916 SOUTH BROADWAY, ST. LOUIS, MO 63111-3197 • PHONE: (800) 937-CAPS • TELEX: 442584 SINCLARUSH STL • FAX: (314) 481-2701

MOLD SIZE D43 S-4HP | TOOL # 2001 | CHARACTERISTIC 10856-5 WALL THICKNESS | DATE 5-30-91 | MACHINE # | SPECS .053 ± .010

$\bar{\bar{x}}$ = Average $\bar{x}$ = .052 U.C.L. = $\bar{\bar{x}}$ + A$_2$ $\bar{R}$ = .053 L.C.L. = $\bar{\bar{x}}$ − A$_2$ $\bar{R}$ = .051

74179-1 AVERAGES (X BAR CHART)

.053
.053
.052
.051
.43

$\bar{R}$ = Average R = .002 U.C.L. = D$_4$ $\bar{R}$ = .004

RANGES (R CHART)

.10
.05
.00
.005
.002

DIP #	1	2	3	4	5	6	7	8	9	10	11	12	13	14	15	16	17
1	51	52	52	53	53	54	54	54	52	52	53	53	53	53	53	53	53
	51	52	53	54	54	54	54	53	51	53	52	52	51	52	53	52	52
	52	52	53	54	54	55	55	54	52	54	53	54	51	52	54	52	52
	52	51	53	54	54	55	54	51	54	53	52	55	51	52	53	51	51
	52	53	54	54	52	52	52	52	53	53	52	54	52	51	52	51	53
		278	270	267	260	265	264	264	255	258	265	257	264				259
		51	54	53	51	53	53	53	51	52	53	52	53	52			
		3	2	2	2	1	2	1	2	2	2	1	2				

940 ÷ 18 = .052

.36 ÷ 18 = .002

Cp
Cpk
$\bar{x}$
UL
LL
$\hat{\sigma}$
A$_2$
D$_4$
d$_2$

TI-NHT3A 0035892

TITLE THREAD CAP

REV. H

74179

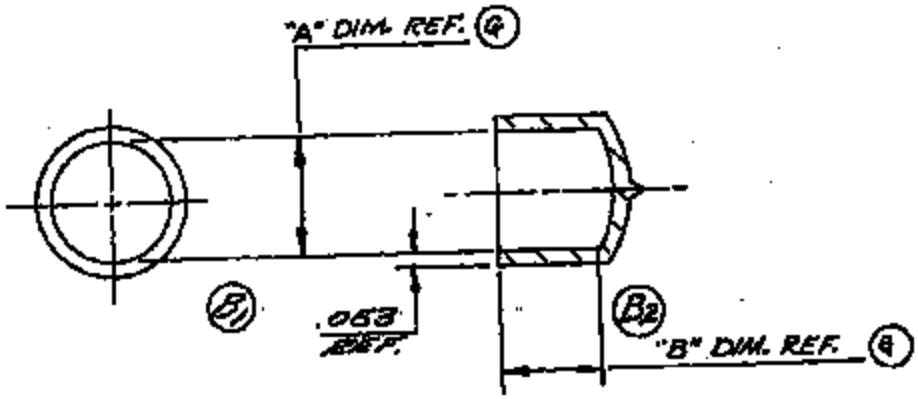

NOTE:
1) IDENTIFICATION MEMO MUST ACCOMPANY EACH SHIPMENT STATING THE FOLLOWING:
SINCLAIR RUSH #SC 0.343-6(3/8"IL)TN 701-1A

(H)

CERTIFIED PRINT
Parts Made To This Print Must Conform To
ENG. STD. E9898 REV. E
Date JUL 1 1991

PART Nos.	MATERIAL	DIM."A"	DIM."B"	VENDOR	COLOR
74179-2	VINYL	.333/.343	.313/.438	SINCLAIR & RUSH	RED
74179-1	VINYL	.355/.365	.281/.343	MOCAP	RED

TEXAS INSTRUMENTS INCORPORATED
ATTLEBORO, MASS., U.S.A.

KLIXON

A

74179

ES TESTS PARTIAL

TI-NHTSA 005884

M E M O R A N D U M
14 April 1992

TO: Bruce Maeroff - Ford Motor Co.

CC: Dave Caarn
Jeff DiDomenico
Norm Freda
Elaine Rose
Jim Watt

FR: Steve Offiler

RE: ES Testing for Full ISR Submission for: F2AC-9F924-AA
F3DC-9F924-AA

The proposed methodology to complete the full ISR submissions for the above referenced part numbers is as follows. A complete battery of ES tests per Ford Engineering Specification (delta) F2VC-9F924-AA will be performed on F2AC. The only difference between this device and F3DC is the fact that F3DC includes a "snubber" which is an .020" nominal diameter orifice in the fluid passage. Therefore, the only tests to be run on F3DC are those which may be somehow impacted by this orifice, specifically the Impulse test and the Thermal Cycle test. Furthermore, as can be seen in the attached Flow Chart (marked-up) the F3DC parts will not be required until 920605, giving sufficient time to obtain production quanities from the supplier.

SO 920413

PLACED-UP BY STAVE APPLIER
TO 9/24/73

COMBINED FLAC7F929AA & F3DC9F944AA
PRODUCTION VALIDATION FLOW CHART

NOTE: THE BURST TEST IS RUN ON FSAC; INSULE AND THERMAL CYCLE ARE ALSO RUN ON FSAC.

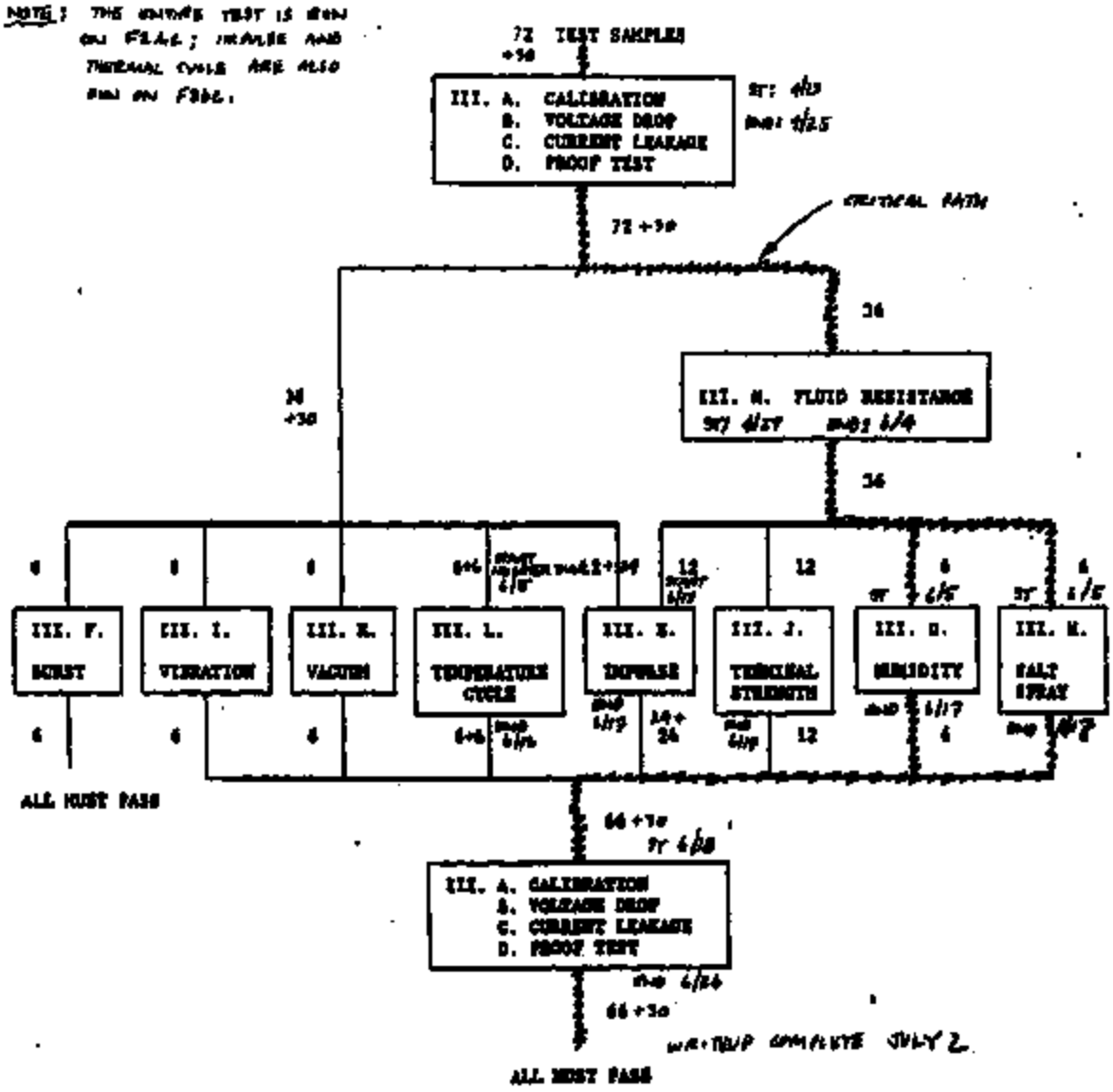

FRAME 4 OF 18	REVISED		NUMBER 7F9-F2VC-9F929-AA

MAY 1966 PD 3947-82 (Previous editions may be used)

M E M O R A N D U M
9 April 1992 - Page 1 of 3

To: Bruce Maeroff Ford Motor Co. Fax: 313-323-1924

CC: Dave Czarn TI Design Eng. Supv.
Norm Freda TI Field Sales Fax: 313-553-1673
Elaine Rose TI QRA

Fr: Steve Offiler TI Design Eng.

RE: EN53 PARTIAL ISR / VALIDATION PLAN FOR F2AC-9F924-AA

Bruce, it is my understanding that we'll be pulling together an ISR package for your perusal during your visit to our plant on Monday, 13 April. This package will be essentially based upon similarity to the F2VC-9F924-AB ISR, since only two components will be changing. Those two components are the pressure-sensing disc and the molded plastic base (switch housing). The base will undergo a First Article Inspection (FAI) which is a detailed study of all print dimensions, and material certifications from the manufacturer will be included. Below you will find detail of the ES tests which will/will not be completed for the Partial ISR (from ES F2VC-9F924-AA):

III. A. Calibration, B. Voltage Drop, C. Current Leak, D. Proof.

Only the Calibration test will be performed on the 24 devices undergoing the Impulse test (E.) below.

III. E. Impulse.

A complete 500,000 cycle Impulse test will be performed per the ES, with the exception that no devices will undergo the Fluid Resistance Test (M.) beforehand. The Impulse test is an excellent test of the ability of the entire device to withstand mechanical (pressure) cycles combined with electrical loads at elevated temperatures, and is a key test to validate the pressure-sensing disc.

III. F. Burst.

Changes to the base and disc should have no effect on burst performance.

III. G. Humidity, M. Fluid Resistance.

The new base material, General Electric Noryl GTX 830, has been tested previously by TI per Ford ES F3AB-19D594-AA along with a host of other engineering plastics. This CCD ES includes Humidity, and Fluid Resistance tests which are similar to the tests called out in ES F2VC-9F924-AA. Noryl was found to pass all tests.

III. H. Salt Spray.

It has been deemed unlikely that changes to the base and disc would have any effect on salt spray performance. Bear in mind that the Fluid Resistance test invoked above included a saturated salt solution, helping to prove that chemical attack will not be an issue; furthermore the environmental sealing system has not been changed in any way providing confidence that salt ingress during salt spray testing will not be an issue either.

III. I. Vibration.

Changes to the base and disc should have no effect on vibration performance.

III. J. Terminal Strength.

The terminal strength test will be performed per the ES, with the exception that no devices will undergo the Fluid Resistance Test (M.) beforehand.

III. K. Vacuum.

Changes to the base and disc should have no effect on vacuum performance.

III. L. Temperature Cycle.

Extensive thermal characterizations have been performed on several materials recently, including the Celanex 4300 PBT material presently used on F2VC-9F924-AB, as well as Ultem, Noryl, and Fortron. While these results are presently undocumented officially, the consistently higher performance of Noryl in terms of dimensional stability relative to Celanex during these tests gives high confidence that changes to the base should have no effect on Thermal Cycle performance.

926409

REPORT OF PARTIAL ISR TESTING
FORD PASSENGER CAR
ELECTRONIC SPEED CONTROL
DEACTIVATION PRESSURE SWITCH
PS/92/62

TEXAS INSTRUMENTS INCORPORATED
CONTROL PRODUCTS DIVISION
PRECISION CONTROLS DEPARTMENT
34 FOREST STREET
ATTLEBORO, MA 02703

TEST LOT NO.	TEST	DEVICE
TESTED BY		
APPROVED BY	TEXAS INSTRUMENTS — MATERIALS & CONTROLS GROUP, ATTLEBORO, MA 02703	DOC.
DATE 92-04-13		PAGE

FORM 5368

TI-NHTSA 005890

TABLE OF CONTENTS

1.0 GENERAL 3

2.0 OBJECTIVE 3

3.0 TEST PROCEDURES AND RESULTS 3
- 3.1 CALIBRATION 4
- 3.2 VOLTAGE DROP 4
- 3.3 IMPULSE 5
- 3.4 TERMINAL STRENGTH 6

4.0 APPENDICES
- 4.1 Memorandum 7
- 4.2 Data # 242 11
- 4.3 Data # 241 13

TI-NHTSA 005891

1.0 GENERAL

1.1 Customer: Ford Motor Company, Passenger Car Brake Systems Engineering

1.2 TI Part Number: 77PSL3-1

1.3 Customer Part Number: [redacted]

1.4 Specifications: Ford Engineering Specification number (delta) ES-F2VC-9F924-AA

1.5 Date of Completion : 920413

1.6 Quantity of Units Tested: 36

1.7 Disposition of Tested Units:

1.7.1 All devices are retained under quarantine.

1.8 TI test number: 241-11-12
242-03-24

1.9 TI Pressure Switch test report number: PS/92/62

2.0 OBJECTIVE

See Memorandum in Appendix 4.1 which explains the scope, extent, and intention of this partial ISR. A full battery of ES tests is planned in the near future to complete a full ISR submission.

3.0 TEST PROCEDURES AND RESULTS

All switches were tested to Ford Engineering Specification (delta) ES-F2VC-9F924-AA, sections III. E. and J., with initial and final characterizations consisting of III. A. Raw data is included in Appendix 4.2 and 4.3.

3.1 CALIBRATION

3.1.1 Procedure: Calibration is checked at room temperature using ambient air as the pressure medium. Calibration settings, as specified on the part drawing, are actuation (electrical contacts opening) at 90 - 160 psig, and release (contacts reclosing) at 20 psig minimum. For the purpose of stabilization, actuation values are recorded on the sixth cycle, after subjecting the switch to two (2) pressure cycles to 800 psig minimum and back to zero, followed by three (3) cycles to 1.1 times actuation pressure minimum and back to zero. The change in continuity is measured while conducting 750 +/- 50 milliamps at 13.0 +/- 1.0 volts DC.

3.1.2 Equipment: Custom TI designed and built pressure check station, using Heise Model CM96365 pressure gage calibrated on a regular quarterly schedule. Continuity change measured on custom TI designed and built equipment meeting the above electrical parameters.

3.1.3 Initial Results: All 36 devices tested were found to be within specification.

3.1.4 Final Results: All 36 devices tested were found to be within specification.

3.2 VOLTAGE DROP

3.2.1 Equipment: Fluke Model 8020B Digital Multimeter, calibrated quarterly, used in conjunction with the continuity equipment in 3.1.2.

3.2.3 Final results: Performed on the Impulse devices only, as a check of degradation of the electrical contacts during the powered portion of the Impulse cycles. All values are significantly below the specification of 200 millivolts maximum.

3.3 IMPULSE

3.3.1 Devices tested: 242-03-01 thru -24

3.3.2 Procedure: Twenty four devices were run on the Impulse test as specified in the ES, with the exception that no devices were run on the Fluid Resistance test due to time constraints. The cycle rate used was actually 163 cycles per minute, again due to time constraints. All other parameters were as specified in the ES.

3.3.3 Equipment: Thermotron model S-4 Mini-Max environmental chamber capable of -55 C to +200 C, humidity uncontrolled. Custom TI designed and built cycler, utilizing Enerpak integrated hydraulic pressure source, TI315 Programmable Logic Controller, Moog servovalve and controller, Simpson signal generator, and opposing-piston fluid isolators, to produce a hydraulic-fluid flow-type primary with a brake-fluid dead-end-type secondary terminated with a 24-station manifold equipped with internal heaters. Capability to 5 Hz at 0-1450 psig cycle. Custom TI designed and built 24 station Switch Monitor Circuit which automatically stops the cycler in the event of abnormal switch action, defined as continuity change which does not track the signal from the signal generator. Thermocouple readouts calibrated quarterly. 12-station inductive load bank, per the schematic found in the ES (frame 18 of 18; figure 4.) used in the last 25K cycles.

3.3.4 Results: All devices passed.

TI-NHTSA 005894

3.4 TERMINAL STRENGTH

3.4.1 Devices tested: 241-11-01 thru -12

3.4.2 Equipment: Custom TI designed and built fixtures for gaging terminal movement after force application and for application of impact via a pendulum. This equipment is regularly used on the 57PS/77PS assembly lines in testing to TI Quality Assurance Specifications.

3.4.3 Results: All twelve devices passed the acceptance criteria found in the ES.

TEST LOT NO.	TEST	DEVICE
TESTED BY		
APPROVED BY	TEXAS INSTRUMENTS — MATERIALS & CONTROLS GROUP, ATTLEBORO, MA 02703	DOC.
DATE 92-04-13		PAGE

FORM 6296

Appendix. 4.1
Memorandum

TEST LOT NO.	TEST	DEVICE
TESTED BY		
APPROVED BY	TEXAS INSTRUMENTS — MATERIALS & CONTROLS GROUP, ATTLEBORO, MA 02703	DOC.
DATE 93n04n13		PAGE 1

FORM 5295

M E M O R A N D U M
9 April 1992 - Page 1 of 3

To: Bruce Maeroff Ford Motor Co. Fax: 313-323-1924

CC: Dave Czarn TI Design Eng. Supv.
Norm Freda TI Field Sales Fax: 313-553-1673
Elaine Rose TI QRA

Fr: Steve Offiler TI Design Eng.

RE: EN53 PARTIAL ISR / VALIDATION PLAN FOR F2AC-9F924-AA

Bruce, it is my understanding that we'll be pulling together an ISR package for your perusal during your visit to our plant on Monday, 13 April. This package will be essentially based upon similarity to the F2VC-9F924-AB ISR, since only two components will be changing. Those two components are the pressure-sensing disc and the molded plastic base (switch housing). The base will undergo a First Article Inspection (FAI) which is a detailed study of all print dimensions, and material certifications from the manufacturer will be included. Below you will find detail of the ES tests which will/will not be completed for the Partial ISR (from ES F2VC-9F924-AA):

III. A. Calibration, B. Voltage Drop, C. Current Leak, D. Proof.

Only the Calibration test will be performed on the 24 devices undergoing the Impulse test (E.) below.

III. E. Impulse.

A complete 500,000 cycle Impulse test will be performed per the ES, with the exception that no devices will undergo the Fluid Resistance Test (N.) beforehand. The Impulse test is an excellent test of the ability of the entire device to withstand mechanical (pressure) cycles combined with electrical loads at elevated temperatures, and is a key test to validate the pressure-sensing disc.

III. F. Burst.

Changes to the base and disc should have no effect on burst performance.

III. G. Humidity, M. Fluid Resistance.

The new base material, General Electric Noryl GTX 830, has been tested previously by TI per Ford ES F3AH-19D594-AA along with a host of other engineering plastics. This CCD ES includes Humidity, and Fluid Resistance tests which are similar to the tests called out in ES F2VC-9F924-AA. Noryl was found to pass all tests.

III. H. Salt Spray.

It has been deemed unlikely that changes to the base and disc would have any effect on salt spray performance. Bear in mind that the Fluid Resistance test invoked above included a saturated salt solution, helping to prove that chemical attack will not be an issue; furthermore the environmental sealing system has not been changed in any way providing confidence that salt ingress during salt spray testing will not be an issue either.

III. I. Vibration.

Changes to the base and disc should have no effect on vibration performance.

III. J. Terminal Strength.

The terminal strength test will be performed per the ES, with the exception that no devices will undergo the Fluid Resistance Test (M.) beforehand.

III. K. Vacuum.

Changes to the base and disc should have no effect on vacuum performance.

III. L. Temperature Cycle.

Extensive thermal characterizations have been performed on several materials recently, including the Celanex 4300 PBT material presently used on F2VC-9F924-AB, as well as Ultem, Noryl, and Fortron. While these results are presently undocumented officially, the consistently higher performance of Noryl in terms of dimensional stability relative to Celanex during these tests gives high confidence that changes to the base should have no effect on Thermal Cycle performance.

920409

Appendix 4.2
Data # 242

TEST LOT NO.	TEST	DEVICE
TESTED BY		
APPROVED BY	TEXAS INSTRUMENTS — MATERIALS & CONTROLS GROUP, ATTLEBORO, MA 02703	DOC.
DATE 93-04-13		PAGE

FORM 5299

PRESSURE SWITCH DATA Form 21605 TEST NO. 242-03-24

DEVICE	DATE REQUESTED	REQUESTED BY	REQUESTED COMPL. DATE
77PSL3-1	920410	Steve Officer	

PERFORMED BY	DATE STARTED	DATE COMPLETED	APPROVED BY
Jeffrey D. Domenico	920410	920413	

PROJECT TITLE: Speed Control

CUSTOMER:

PURPOSE OF TEST: Partial ISR of 77PSL3-1

PROCEDURE: Impulse test, per Ford ES, of 24 production devices.

Device #	Initial Act - Rel		Post Act - Rel	Mv drop					
242-03-01	158 - 102	I	157 - 104	10.3 mv					
-02	132 - 113	M	116 - 110	3.6					
-03	136 - 101	P	154 - 102	5.6					
-04	135 - 114		127 - 110	2.6					
-05	139 - 116	U	153 - 117	15.9					
-06	137 - 102	I	149 - 102	3.2					
-07	116 - 116		129 - 103	6.3					
-08	137 - 113	I	126 - 110	22.5					
-09	141 - 113	C	134 - 113	0.5					
-10	134 - 113		133 - 105	4.7					
-11	146 - 121	T	138 - 104	2.8					
-12	132 - 105	S	129 - 105	4.2					
-13	135 - 115		136 - 105	3.2					
-14	141 - 117	I	135 - 107	10.3					
-15	134 - 109		135 - 108	3.7					
-16	134 - 112		127 - 111	3.8					
-17	134 - 115		134 - 111	3.7					
-18	135 - 116		137 - 109	4.8					
-19	135 - 102		135 - 107	3.6					
-20	136 - 103		135 - 107	7.0					
-21	158 - 113		140 - 113	6.9					
-22	135 - 103		132 - 103	15.1					
-23	132 - 103		130 - 101	6.6					
-24	134 - 101		129 - 103	6.1					

Appendix 4.3
Data # 241

TEST LOT NO.	TEST	DEVICE
TESTED BY		
APPROVED BY	TEXAS INSTRUMENTS — MATERIALS & CONTROLS GROUP, ATTLEBORO, MA 02703	DOC.
DATE 12-22-93		PAGE 13

FORM 5298

PRESSURE SWITCH DATA Form 21605 TEST NO. 241-11-12

DEVICE	DATE REQUESTED	REQUESTED BY	REQUESTED COMPL. DATE
77PS	920409	Steve Caffiey	

PERFORMED BY	DATE STARTED	DATE COMPLETED	APPROVED BY
Rich Dieers	920409	920410	

PROJECT TITLE: Speed Control

CUSTOMER:

PURPOSE OF TEST: Part of Nuyl base/silent disc validation

PROCEDURE: Production build 77PS with natural Nuyl bases and let "F" silent discs. Characterize in pressure tester. Run standard terminal strength tests per Ford ES and recharacterize.

Device #	2nd Act/Rel	Final Act/Rel							
241-11-01	124 - 102	114 - 103							
-02	127 - 95	110 - 95							
-03	124 - 96	121 - 96							
-04	124 - 100	126 - 101							
-05	124 - 95	126 - 97							
-06	131 - 101	132 - 103							
-07	132 - 101	132 - 103							
-08	130 - 93	129 - 98							
-09	122 - 102	124 - 107							
-10	124 - 97	124 - 101							
-11	129 - 95	129 - 100							
-12	121 - 100	131 - 100							

MISC.

TI-NHTSA 005904