-MSG M#= 122733 FR=EARM TO=PCQA SENT=12/17/91 08:26 AM
R#=193 ST=C DIV=0050 CC=00101 BY=EARM AT=12/17/91 08:26 AM

DECEMBER 17, 1991

TO:	RUSTY STRUBLE	RCS2	CC:	TOM CHARBONEAU	TC
	MIKE DeMATTIA	PCQA		JOHN KOURTESIS	MDES
	CHARLIE DOUGLAS	CPPC		STEVE MAJOR	WHLS
	DICK GARIEPY	MFPC		ANDY McGUIRK	PCQA
	PAUL KOTCH	PRK1		ED O'NEILL	EJON
	JOE LAZARE	JMLS			
	STEVE OFFILER	SBG1		GARY SNYDER	CPPC
	MATT SELLERS	PCMS		MARTHA SULLIVAN	CPPC
	BILL SWEET	PCMS		RAY TOURANGEAU	PCMS
	JIM WATT	PCQA		BILL CONGDON	MFPC
	CLAIRE BALTHAZAR	PSWT		STEVE MCCOOEY	MDES
	TERRY RODRIGUES	MFPC		ELAINE ROSE	PCQA

FR: DAVE CZARM EARM

SJ: FORD CRUISE CONTROL PRESSURE SWITCH START-UP MEETING:
12/12/91 MEETING MINUTES

MEETING

THE NEXT MEETING IS SCHEDULED FOR:

DATE: 12/19 (THURSDAY)
TIME: 10:00 - 11:30 AM **********
PLACE: CAFETERIA CUBE *****PLEASE NOTE CHANGE*****
****

77PS

Hexport:

Elco indicated a number of weeks ago that their J512 gage had unacceptable R&R. Matt will follow up to determine where the problem lies and what can be done to improve it.

. REPORT ON ELCO ISSUES FROM 7/22 VISIT - 10B21 STEEL/.00015" MIN. PLATE/J512 $	KOTCH	ONGOING
. CORRECT ELCO'S J512 GAGE R&R ISSUE	SELLERS	1/23

Environmental Seal:

Blue seal material has been approved by Ford; seals are included in P/C validation testing. Striped seals will be purged from the line when the blue seals - of the same thickness - are received.

. INCLUDE GASKETS IN P/C RE-VALIDATION	OFFILER	ONGOING ?
SUBMIT CHANGE NOTICES TO TIER 1'S	DOUGLAS	12/12
* ENSURE THAT P/N 74247-4 IS ORDERED FOR 77PHL2-1 WHEN NEXT ORDER IS PLACED	LAZARE	COMP.
* REMOVE -3 AS ALTERNATE FROM P/L	OFFILER	1/30

TI 002A257

Production Issues:

. MAINTAIN RUNNING TOTAL OF L/T (L2-3) SWITCHES LEADING TO 100K FOR AMORTIZATION	STRUBLE	ONGOING

8092 pcs. 1/6/92 1/13/92 } Review 6400 Build 9K

TI-NHTSA 004038

(2)

		91 Oct	Nov	Dec	92 Jan	Feb	Mar	Apr	May	June	3Q	4Q	1Q	2Q (3)
1	F32B (May 94 ½) Pushed-out (Jim Wood)													
2	DFMEA													
3	PFMEA													
4	EP										9/91			
5	VP													
6	IP1													
7	FB/IP2/ISW													
8														
9	ZJ Chassis/GM STD In Production *													
10	DFMEA ✓ Complete * D. Crane													
11	PFMEA ✓ Complete T. Spence													
12	Qual ✓ Annual Requal Required													
13														
14														
15														
16	LH Chassis Will Not Go Into Production													
17	DFMEA													
18	PFMEA Timing from D. Crane													
19	TSR Not Established Must Do to get paid													
20														
21														
22	Ford 77PS PK CCPS (In Production) *													
23	K-H DFMEA													
24	P.HS PFMEA													
25	DANA EP													
26	VP													
27	IP1													
28	FB/IP2/ISW													

OPERATING UNIT: PREPARED BY: Updated DATE: 12/17/91

UNIVERSAL PLANNING FORM

* Must Qualify By

TI-NHTSA 004039

(3)

		91			92									93	
		Oct	Nov	Dec	Jan	Feb	Mar	Apr	May	June	3Q	4Q	1Q	2Q
1	77PS L/TCCRS	(IN PRODUCTION)												
2	DFMEA				▽		▽							
3	PFMEA				▽		▽							
4	EP			▽										
5	VP			▽										
6	IP1			▽										
7	FB/IP2/ISW			▽										
8	"Y Cab" 6/PSF2-4						Prev. Approved							
9	Comm Switch	GP. 3 Submitted				8/91 - Not Approved; Need updates on								
10	6/PS Type F24	Stability tests to get approval												
11	HPD Spec Issues	Over Since 1991												
12	Qual	Not Established												
13	GP4													
14	GP3													
15														
16	XIR (PSM)													
17	GP3													
18	S/U													
19														
20	XIF (PSM)													
21														
22														
23														
24														
25	IMS (PSM)													
26														
27														
28														

OPERATING UNIT:

PREPARED BY: Updated

DATE: 12/17/91

-MSG M#= 95932 FR=ADC TO=PCME SENT=12/16/91 11:16 AM
R#=534 ST=C DIV=0050 CC=00561 BY=ADC AT=12/16/91 11:14 AM

TO	ED O'NEILL	EJON
CC	RAY TOURANGEAU	TOUR
	TOM CHARBONEAU	ELB
	MA[redacted]	MJS2
	TI[redacted]	PCME
	BILL SWEET	WSSO
	STAN HOMOL	SH2
	AL AMORE	AA1
	DICK GARIEPY	MFPC
FROM	AGNES CARDOZO	ADC
SUBJ	DUPONT PRICE INCREASE - P/N 27225-1 AND -2	

I HAVE BEEN SUCCESSFULL IN DELAYING DUPONT'S REQUESTED PRICE INCREASE THROUGH MARCH 31, 1992. AT THAT TIME, DUPONT EXPECTS TO RECEIVE A 4.6% PRICE INCREASE THAT OUR PURCHASING GROUP HAS DELAYED FOR THE PAST 18 MONTHS. THIS PRICE INCREASE WILL TOTAL APPROX $10K ANNUALLY.

BOTH ED MCKENZIE, SALES ENGINEER OF DUPONT, AND I HAVE AGREED TO SET UP A TEAM IN EARLY JANUARY WITH OUR TECHNICAL PEOPLE TO REVIEW THIS MATERIAL, (STAN HOMAL AND AL AMORE) TO BRAINSTORM OUR MATERIAL SPECIFICATIONS FOR POSSIBLE CHANGES TO HELP HOLD OR REDUCE PRICING. THIS IS A NON-STANDARD, LOW VOLUME 3-LAYER LAMINATE OF TEFLON AND KAPTON SPECIALIZED TO OUR REQUIRMENTS.

THE PURPOSE OF THIS MESSAGE IS TO ANNOUNCE THE PRICE HOLD AND TO GIVE THE TEAM THE ADVANCE NOTICE ON THE NEED TO DEVELOPMENT THINKING TOWARDS POSSIBLE CHANGES TO COST REDUCE THIS MATERIAL.

REGARDS, AGNES ADC

197-01-25

SAMPLE ORDER

ORDER NO: CD91-58

REQUEST DATE: 12/17/91

CREDIT ACCOUNT: 5902

COST CENTER: 101

PRODUCT CODE: ~~060~~ 88

CUSTOMER:	FORD MOTOR COMPANY
CUSTOMER P.O. NO:	47-X-U64001
TI PART NO:	77PSL2-1
CUSTOMER PART NO:	F2VC 9F924 ~~AK~~ AB
QUANTITY:	25
PRICE:	$10.00 EACH
DELIVERY PROMISED:	01/03/91

SPECIAL INSTRUCTIONS: THESE ARE STANDARD PRODUCTION 77's, SIMPLE!

Shipped 12/19/91

BILL TO:
FORD MOTOR COMPANY
P.O. BOX 1704
DEARBORN, MI 48121

SHIP TO:
FORD MOTOR COMPANY
1800 BAILEY STREET
DEARBORN, MI 48124
ATT'N: RICK GALLI

xx PRODUCTION SAMPLES

ENGINEERING DEVELOPMENT SAMPLES

CC: ENGINEERING: STEVE OFFILER

PRODUCTION CONTROL: VAL'LORIE EGGERT

SALES ENGINEER: STEVE MAJOR

Copy
3-2-93

TEXAS INSTRUMENTS INCORPORATED
QAS 208
FORD MOTOR COMPANY

TI P/N	CUSTOMER P/N	CUSTOMER
77P8L2-1	F2VC-9F924-AB	Ford
77P8L2-2		Ford
77P8L2-3	F3TA-9F924-AA	
77P8L3-1	F2AC-9F924-AA	Ford
77P8L5-2	F3DC-9F924-AA	Ford
77P8L3-2	F58A-9F924-AA	
77P8L3-3	F3TA-9F924-BA	
77P8L4-1	94DA-9F924-AA	Australia
77P8L6-1	94JA-9F924-AB	Australia

DEPARTMENTS AFFECTED	PREPARED	QUALITY ASSURANCE SPECIFICATIONS	Q.A.S. NO. 208	REVISIONS #	DATE
	CHD E. Ross	TEXAS INSTRUMENTS	DATE ISSUED 12-17-91	A	4-11-92
	CHRP J. Watt	ATTLEBORO, MASSACHUSETTS 02703	SH 1 OF 13	B	9-23-92
	APPD				

SUBJECT Disc #1, WP, QAS 208 - FORD MOTOR COMPANY

TI-NHTSA 004043

1.0 SCOPE

This specification establishes the inspection criteria, methods, standards and reaction plans for the inspection of the 77PS pressure switch. It is the intent of this document to meet or exceed requirements set forth by customer purchase orders and engineering standards.

2.0 DEFINITIONS

2.1 This specification is applicable to all production units.

2.2 Unless otherwise noted all sampling plans allow zero defects (reject on one defect).

2.3 Every effort shall be made to employ statistical methods (X & R Chart, precontrol, etc.) to assure ongoing process control after capability has been demonstrated.

2.4* A route card shall accompany each sublot of material, after it obtains identity.

2.5 A lot is defined as that quantity of devices which is homogenous. A lot shall not exceed 8 hours of production or 4000 devices. If one day's production exceeds 4000 devices sub-lot numbers may be used. A sub-lot of the same shift's production will be noted with a letter and will not exceed 4000 devices.

2.6 Unless otherwise specified, all tests will be conducted at room ambient conditions.

2.7 Final inspection will be accomplished in accordance with section 3.0 of this QAS. A Reject Notice (form number 5341) shall be initiated and the applicable reaction plan will be initiated.

2.8 Special Inspections and Requirements will be accomplished in accordance with section 4.0 of this QAS.

2.9 Reliability testing will be accomplished per section 5.0 of this QAS.

* The route card shall indicate the link number, description, date, operator number and inspection status. (Where applicable)

3.0 FINAL INSPECTION TEST

The following inspections will be accomplished on completed devices. When a discrepancy is encountered, Quality Engineering will be notified by a Reject Notice (form 5341). Tear down analysis or other means will be employed to ascertain the cause of the discrepancy and to define what corrective actions will be initiated.

3.1 Post Pressure Tester Inspection

Five (5) devices per box selected at random, will be visually checked for:

- Code - Legibility and correctness of code.
- Crimp ring and hexport - free of dents, nicks, scratches, surface contamination and other deformities.
- Sensors to be free of metallic flakes and slivers.
- Check base for cracks, bent or deformed terminals and large surface dents.
- Record results on "Inspection Log Sheet".
- Terminal location with connectors or go no go gage
- Polarity key - correctness of location
- Check threads

3.2 Packing

Check all shipping labels for current Engineering Revision number and ensure correct customer part number is on label and device. Ensure labels on box are in correct position and legible. Auditing frequency of packed devices to be set by Quality Engineer.

4.0 SPECIAL INSPECTIONS AND REQUIREMENTS

The following chart is to be used as a guide for special testing of pilots prior to build. Results will be used as the final inspection for these attributes.

Note: Those specific tests which require a hydraulic seal to the hexport must have an O-ring fitted to the hexport, e.g., impulse testing, proof/burst testing.

4.0 **Special Inspections and Requirements** (Cont'd)

5 Devices	4 Devices
Calibration 4.1.1 (Include Voltage drop?)	(1) Calibration 4.1.1 (Spec)
Impulse 4.1.3	(2) Dimensional 4.1.6
	(5) CurrentLeakage 4.1.2
	(6) Proof 4.1.4
	(4) Calibration 4.1.1 (50% Allow)
Calibration 4.1.1	(3) Term Strength Push-out 4.1.7
Current Leakage 4.1.2 (Release Drop?)	(7) Calibration 4.1.1 (Spec.)
Proof 4.1.4	Current Leakage 4.1.2 (Because of term strength)
	Proof 4.1.4
	(8) Burst 4.1.5
Scrap	(9) Scrap

4.1.1 **Calibration/Voltage Drop (Automatic)**

Nine (9) devices from each disc lot will be 100% tested for actuation, release, and voltage drop using TI automatic test equipment. (O.C. equip. of production?)

All tests will be accomplished after the third cycle with the switch conducting 700-800 mA at 12.0 - 14.0 VDC.

The actuation and release pressure will meet the customer requirements as indicated on envelope drawing.

The rate of pressure change (ramp-up, ramp down) will be 50 PSI/sec.

The voltage drop across the contact area is automatically checked by the test equipment.

4.1.1 (continued)
The voltage drop will not exceed 200 MV with a 700 to 800 mA current flow through the switch.

Devices which fail must be segregated from acceptable units and appropriately identified by category.

Results of the calibration and voltage drop test shall be maintained by inspection for 2 years.

Note: The automatic pressure tester provides screen indications for actuation, release, differential plus voltage drop so discrepancies can be categorized.

4.1.2 Current Leakage

Four (4) devices per sample of nine (9) will be measured for current leakage. The current leakage is to be measured with 500 volts, 60 Hz alternating current applied. The current leakage is to be checked as follows:

- Between the switch leads with contacts open
- Between the lead and switch housing with contacts closed
- Between either lead and switch housing with contacts open

For lot acceptance the measured leakage current shall not exceed 0.1 milliampere. Record results on inspection characteristic data sheet.

4.1.3 Impulse Test

The pressure medium used shall be currently released with power steering fluid equivalent or brake fluid. The switches will be cycled as per the table in section 5.2.5.4.

Note: Upon completion of impulse testing the switches are to be tested per Para. 4.1.1, 4.1.2, 4.1.4, 4.1.5. Record results on inspection characteristic data sheet.

4.1.4 Proof Test
The test is to be conducted using power steering fluid or equivalent as pressure medium. Test pressure is to be isolated from pressure source and held for not less than 30 seconds. For lot acceptance, the switches shall not show any evidence of oil leakage, seepage or drop in pressure greater than 62.0 psig. Record results on inspection log. L2-1 (P/C) 3000 psig; L2-3 (L/T) 4000 psig.
Note: The test samples must be scrapped after testing. ?

Why Not Post Calibration Requirement 4/1-5/0

4.2 Inspection of Salvaged/Reworked Material

All salvage material will be inspected prior to use. Ten percent (10%) of the salvage parts or subassemblies will be inspected to determine that they conform to print specification or engineering standard. A defect requires notification of the supervisor or group leader by a rejection notice (Form #5341) and a resample after corrective action.

4.3 Record Retention

Route cards, control charts, inspection characteristics, data sheets, test forms, laboratory test results, gage repeatability studies, and engineering specification test methods must be retained through the current model year and for one year thereafter. All records will be available for review by customers and copies of individual records will be furnished upon request.

5.0 RELIABILITY

Reliability testing will be accomplished per the following schedule:

5.1

Type Test	Sample Size	Frequency	Min. Req.
Humidity	6	2/Yr	P90=.72
Salt Spray	6	2/Yr	P90=.72
Vibration	6	2/Yr	P90=.72
* Vacuum	6	2/Yr	P90=.72
* Temperature Cycle	6	2/Yr	P90=.72

Note: Additional reliability testing may be accomplished to assure product conformance.

* The vacuum test will be conducted by Design Engineering personnel. The temp cycle test will be conducted by QC using Design Engineering equipment.

5.2 Test Procedures:

5.2.1 Humidity

5.2.1.1 Mount the switch in the test port in a humidity chamber. Currently released mating electrical connector must be installed before start of test.

4.1.5 **Burst Test**

The burst pressure medium shall be power steering fluid or equivalent. The switch is to be pressurized to 7000 psig and held for 30 seconds minimum. For acceptance all switches will not show evidence of oil leakage or seepage from the switch or threads. Record data on inspection characteristics data sheets.

Note: Samples used for this test must be scrapped after testing is completed.

4.1.6 **Dimensional Checks**

Four (4) devices from each disc lot, pilot will be checked for dimensions as follows:

N/A HEADPOST COMPONENT GAGE AT BUS. TIME

~~[illegible]~~	~~2201230 [illegible]~~
Length	2.250" Max
Crimp Ring Dia.	1.280" Max
Hex	.552 - .572

Thread (torque wrench go-no go) 3/8 - 24 - UNF-2A
4.5 in.-pounds max

3A.

Connector and dimensions (per print)
Terminal location and dimensions (go gages)
Note: Record results on inspection log

4.1.7 **Terminal Strength**

The same four devices used in 4.1.6 will be measured for terminal strength.

The switch shall be mounted in a special force test gage.

A pendulum shall apply a 10.0 lb (.415 lb at 1.0 ft) impact force to the switch housing at the connector end, perpendicular to the center line axis of the switch.

Push Out Test

The same four (4) devices used in 4.1.7 will be tested for push out force. The switches will be mounted in test stand with a force gage.

For acceptance, the terminals will withstand a 20.0 lb axial push force.

Upon completion of the test, the switches shall be tested for calibration, current leakage, and proof test.

For lot acceptance all switches shall not have any terminal or housing fracture, and must pass test defined above. Record results on inspection log.

5.2.1.2 Subject the switch to ten (10) continuous humidity cycles as follows:

- Raise temperature to 65 + 10/-2°C over 2.5 hours; at 90 - 98% relative humidity.
- Hold 3 house at 65 + 10/-2°C at 90-98% relative humidity.
- Lower temperature to 25 + 10/-2°C over 2.5 hours; at 80-98% relative humidity.

5.2.1.3 <u>Acceptance Requirements</u>

Within 15 minutes after completion of the tenth humidity cycle, check the switch to 4.1.1, 4.1.2 and 4.1.4.

5.2.1.4 Nonconformance is defined as any switch not meeting the criteria in section 4, Para. 4.1.1, 4.1.2, and 4.1.4.

5.2.2 <u>Salt Spray</u>

5.2.2.1 Mount the switch horizontal in the test port in a salt spray chamber. The currently released mating electrical connector and wiring must be installed prior to start of test.

5.2.2.2 Expose the switch assembly to 72 hours of salt spray per ASTM B-117.

5.2.2.3 After exposure, check the switch to 4.1.1, 4.1.2, and 4.1.4 using the procedure established in each section.

5.2.2.4 Nonconformance is defined as any switch not meeting the criteria in 4.1.1, 4.1.2, and 4.1.4. Samples used for this test must be destroyed after all testing is completed.

5.2.3 <u>Vibration</u>

5.2.3.1 Mount the switch in the test port and attach the currently released mating electrical connector before the start of test.

5.2.3.2 Switches are to be vibrated in all 3 planes with electrical continuity being monitored during the entire test. Vibration tests are to be conducted at room temperature using brake fluid, ambient air, or equivalent as the pressure medium.

5.2.3.3 Internal pressure shall be maintained at zero KPa G when the switch is in the closed position and 1.1 times max actuation pressure shown on print when the switch is in the open position.

TEXAS
INSTRUMENTS

ADDENDUM TO:
REPORT OF ISR TESTING
FORD PASSENGER CAR
ELECTRONIC SPEED CONTROL
DEACTIVATION PRESSURE SWITCH
PS/91/49-A

TEXAS INSTRUMENTS INCORPORATED
CONTROL PRODUCTS DIVISION
PRECISION CONTROLS DEPARTMENT
34 FOREST STREET
ATTLEBORO, MA 02703

TEST LOT NO.	TEST	DEVICE
TESTED BY		
APPROVED BY	TEXAS INSTRUMENTS — MATERIALS & CONTROLS GROUP, ATTLEBORO, MA 02703	DOC.
DATE 91-12-18		PAGE 1

FORM 8296

TABLE OF CONTENTS

1.0 GENERAL

1.1 Customer: Ford Motor Company, Passenger Car Brake Systems Engineering

1.2 TI Part Number: 77PSL2-1

1.3 Customer Part Number: F2VC-9F924-AB

1.4 Specifications: Ford Engineering Specification number (delta) ES-F2VC-9F924-AA

1.5 Date of Completion : 911218

1.6 Quantity of Units Tested: 48

1.7 Disposition of Tested Units:

1.7.1 All devices are retained under quarantine.

1.8 TI test number: 172-15-24
173-15-24

1.9 TI Pressure Switch test report number: PS/91/49-A

TEST LOT NO.	TEST	DEVICE
TESTED BY		
APPROVED BY	TEXAS INSTRUMENTS — MATERIALS & CONTROLS GROUP, ATTLEBORO, MA 02703	DOC.
DATE 91-12-18		PAGE

FORM 8398

2.0 OBJECTIVE

The original battery of tests reported in TI test report number PS/91/49 dated 910920 was performed to demonstrate the ability of TI P/N 77PSL2-1 to conform to customer specifications given in (delta) ES-F2VC-9F924-AA, in fulfillment of the requirements of the Initial Sample Report. During these original tests, problems were noted with diaphragm life during the Impulse test. It was discovered that these problems were related to the automatic pressure sensor assembly crimper, and furthermore that devices assembled on the manually-loaded crimper had no difficulty with diaphragm life. In the interest of meeting strict ISR deadlines, the Impulse portion of the test was successfully re-run using devices assembled on the manually-loaded crimper. However, these devices did not undergo the Fluid Resistance test due to time constraints. A 90-day Alert, # A10166193, was issued on 911002 (see Appendix 4.1). During this 90-day period, efforts to understand and correct the discrepancies of the automatic equipment have been made. The objective of this addendum is to report on the successful completion of the tests (Fluid Resistance and Impulse) which were compromised in the original ISR, using devices built both on the automatic equipment and the manually-loaded equipment. Crimp dies from the manually-loaded equipment were transferred to the automatic equipment in order to produce the successful test devices. The permanent corrective action will be to produce exact duplicates of these crimp dies for the automatic line.

3.0 TEST PROCEDURES AND RESULTS

All switches were tested to Ford Engineering Specification (delta) ES-F2VC-9F924-AA, sections III. M. (Fluid Resistance) and E. (Impulse), with initial and final characterizations consisting of III. A. (Calibration), B. (Voltage Drop), C. (Current Leakage), and D. (Proof). Raw data is included in Appendix 4.2 and 4.3.

3.1 CALIBRATION

3.1.1 Procedure: Calibration is checked at room temperature using ambient air as the pressure medium. Calibration settings, as specified on the part drawing, are actuation (electrical contacts opening) at 90 - 160 psig, and release (contacts reclosing) at 20 psig minimum. For the purpose of stabilization, actuation values are recorded on the sixth cycle, after subjecting the switch to two (2) pressure cycles to 800 psig minimum and back to zero, followed by three (3) cycles to 1.1 times actuation pressure minimum and back to zero. The change in continuity is measured while conducting 750 +/- 50 milliamps at 13.0 +/- 1.0 volts DC.

3.1.2 Equipment: Custom TI designed and built pressure check station, using Heise Model CM96365 pressure gage calibrated on a regular quarterly schedule. Continuity change measured on custom TI designed and built equipment meeting the above electrical parameters.

3.1.3 Initial Results: All 48 devices tested were found to be within specification.

3.1.4 Final Results: All 48 devices tested were found to be within specification.

3.2 VOLTAGE DROP

3.2.1 Equipment: Fluke Model 8020B Digital Multimeter, calibrated quarterly, used in conjunction with the continuity equipment in 3.1.2.

3.2.2. Initial results: The average voltage drop was 4.5 millivolts, and the standard deviation was 1.5. All values are significantly below the specification of 200 millivolts maximum.

3.2.3 Final results: The average voltage drop was 14.3 millivolts, and the standard deviation was 22.7. All values are significantly below the specification of 200 millivolts maximum.

3.3 CURRENT LEAKAGE

3.3.1 Equipment: Associated Research HyPot test unit used as power source for 500 VAC, 60 Hz test circuit. Fluke Model 8020B Digital Multimeter, calibrated quarterly, used to measure voltage crop across a series resistance of one megohm (+/- 5%).

3.3.2 Initial results: Measuring terminals to case with switch closed; measuring terminals to case with switch open; and measuring between the terminals: the maximum current leakage observed less than 2 microamps. All values are significantly below the specification of 100 microamps.

3.3.3. Final results: Same three measurements per device as 3.3.2. All current leakage values were consistent with initial results. The maximum observed was 2.7 microamps. All values are significantly below the specification of 100 microamps.

3.4 PROOF

3.4.1 Procedure: Calibration readings were recorded only after proof testing. Test pressure was 3000 psi per the part drawing.

3.4.1 Equipment: Enerpak model P-392 hydraulic hand pump using Enerpak hydraulic fluid as the pressure medium. Hydraulic fluid is removed from the devices using a combination of vacuum and residue-free solvent Sprayon(TM) Hi-Tech 02002 TF Electrical Contact Cleaner. US Gauge #33714 reading to 5000 psig with 100 psi increments, resolvable to 50 psi., calibrated quarterly. Custom TI designed and built safety enclosure.

3.4.2 Initial Results: No evidence of fluid leakage and no drop in test pressure was observed on any device.

3.4.3 Final Results: No evidence of fluid leakage and no drop in test pressure was observed on any device.

3.5 FLUID RESISTANCE

3.5.1 Devices tested: 172-15-01 thru -12
173-15-01 thru -12.

3.5.2 Equipment: Fluids as called out in ES table (frame 12 of 18); appropriate beakers and storage apparatus; vented hood.

3.5.3 Results: The 24 devices were subject to the Impulse test following completion of Fluid Resistance.

TEST LOT NO.	TEST	DEVICE
TESTED BY		
APPROVED BY	TEXAS INSTRUMENTS — MATERIALS & CONTROLS GROUP, ATTLEBORO, MA 02703	DOC.
DATE 01-22-18		PAGE 18

FORM 8208

3.6 IMPULSE

3.6.1 Devices tested: 172-15-01 thru -24
173-15-01 thru -24.

3.6.2 Procedure: 172-15-13 thru -24 and 173-15-13 thru -24 were run together on the Impulse test per the ES. Devices 172-15-01 thru -12 and 173-15-01 thru -12 were subject to the Fluid resistance test first, then run together on the Impulse test.

3.6.3 Equipment: Thermotron model S-4 Mini-Max environmental chamber capable of -55 C to +200 C, humidity uncontrolled. Custom TI designed and built cycler, utilizing Enerpak integrated hydraulic pressure source, TI315 Programmable Logic Controller, Moog servovalve and controller, Simpson signal generator, and opposing-piston fluid isolators, to produce a hydraulic-fluid flow-type primary with a brake-fluid dead-end-type secondary terminated with a 24-station manifold equipped with internal heaters. Capability to 5 Hz at 0-1450 psig cycle. Custom TI designed and built 24 station Switch Monitor Circuit which automatically stops the cycler in the event of abnormal switch action, defined as continuity change which does not track the signal from the signal generator. Thermocouple readouts calibrated quarterly. 12-station inductive load bank, per the schematic found in the ES (frame 18 of 18; figure 4.) used in the last 25K cycles.

3.6.4 Results: All devices passed.

Appendix 4.1
Alert

TEST LOT NO.	TEST	DEVICE
TESTED BY		
APPROVED BY	TEXAS INSTRUMENTS — MATERIALS & CONTROLS GROUP, ATTLEBORO, MA 02703	DOC.
DATE		PAGE

FORM 5386

ALERT DETAIL

PRINT DATE/TIME: 91/10/11 09:39
PAGE: 1

ALERT NUMBER
A10164195

ORIGIN ACTIVITY: HC00 CHASSIS PRO (LOCH)
ORIGINATOR: PEASE, D. F.
CPSC: 040405

TYPE: (N) USE PPM
DATE: 91/10/02
PHONE: 32-37055
NOTICE NO:

STATUS: A
LOCATION: RM 3001, BLDG#5, D
RESOLVING NOTICE:

ALERT DESC: PERMIT TEXAS INSTRUMENTS TO HELP SPEED CONTROL REDUNDANT DEACTIVATION SWITCH, F2VC-9F926-AB, WITH EXCEPTION TO THE INTENDED MANUFACTURING/ASSEMBLY PROCESS CONSISTING OF

PRODUCTS AFFECTED: 1992 LINCOLN TOWN CAR, CROWN VICTORIA, GRAND MARQUIS WITH NEW GENERATION SPEED CONTROL.

MODEL CODES: CVFA CVFM CVVB
PLANTS AFFECTED: HA17
MFG CONCERN CNTRL:
PROGRAM:
QTY:
EST INCRM VAR COST: -0.92
EST INCRM VRD COST:
UNIT MEASURE:
SUPP DOCS:

MODEL YEAR: 92

ENG CONCERN CNTRL:
EFFECTIVE JN:
TIME: 90D ENGINEER CODE: 600
EST INCRM TOOL COST: 0
EST INCRM FAC COST: 0
APPEARANCE:

INVALID:
OUT:
DISP: W
EST INCRM LBR COST: 0.00
WT EFFECT: 0.0000

AFFECTED PARTS

AFF PART NO:
CPSC: 040405
ACT: INTER:

AFF PART DESC:
NOTICE:
SUPPLY/LOCAL: AVAIL:
SUPPLIER:

REL IND: N
FUNC REQR:

FURTHER DESCRIPTION/ALERT RESOLUTION/REASON FOR REJECTION ETC.

USERID: BFP2489 ACTIVITY: HC00 ENTRY DATE: 91/10/02
ALERT DESC:
USING A MANUALLY LOADING SENSOR CRIMPING MACHINE VERSUS THE AUTOMATIC IN LINE LOADED CRIMPER. THE AUTOMATIC CRIMPER HAS BEEN DETERMINED TO HAVE A TEST TO BE DEFINED DEFICIENCY THAT RESULTS IN PART FAILURE TO MEET THE REQUIRED NUMBER OF CYCLE IN THE IMPULSE TEST. THE SUPPLIER IS GIVEN A 90 DAY PERIOD TO RESOLVE THE ISSUE. THE MANUALLY CRIMPED PARTS PASS THE CY TEST. THIS DEVIATION PERMITS INCORPORATION OF THE -AB LEVEL SWITCH AND DELETION OF THE INTERIM -AB SWITCH FOR A COST REDUCTION OF $.92. THE -AB SWITCH IS PIA TO END ITEM

USERID: BFP2489 ACTIVITY: HC00 ENTRY DATE: 91/10/03
ALERT DESC:
PROPORTIONING VALVES F2AC-2B091-BA, F2VC-2B091-CC, AND JUNCTION BLOCK F2AC-2C328-CB.

USERID: LAZ6686 ACTIVITY: HC00 ENTRY DATE: 91/10/04
ALERT DESC:
DX. SUPVR. APPROVAL REQ'D. IF PHASE IS AFFECTED. LAZ

USERID: BJM5368 ACTIVITY: HC00 ENTRY DATE: 91/10/04
ALERT DESC:

-MORE-

TI-NHTSA 004088

ALERT DETAIL

PRINT DATE/TIME: 91/10/11 09:39
PAGE: 2

ALERT NUMBER
A181661931

ORIGIN ACTIVITY: MC00 CHASSIS PED (LMCS)
ORIGINATOR: PEASE, R. F.
CPSC: 060605

TYPE: (U) USE PPM
DATE: 91/10/02
PHONE: 32-37955
NOTICE NO:

STATUS: A
LOCATION: RM 3001, BLDGW5, P
RESOLVING NOTICE:

---------- FURTHER DESCRIPTION/ALERT RESOLUTION/REASON FOR REJECTION ETC. ----------

USERID: BJN5368 ACTIVITY: MC00 ENTRY DATE: 91/10/04
ALERT DESC:
FRYER NOT AFFECTED BJN

USERID: JLS1824 ACTIVITY: MC00 ENTRY DATE: 91/10/07
ALERT DESC:
NOTED J SIMMONS 32-37976

---------- APPROVALS ----------

REGION	DEPARTMENT	USERID	ACTIVITY	APPROVER'S NAME	DATE APPROVED	APPROVAL
M	KB667	BFP2409	MC00	PEASE, R. F.	91/10/02	
M	KB667	JLS1824	MC00	SIMMONS, J.L.	91/10/07	Y
M	KB663	LAZ8686	MC00	ZIELINSKI, L.A.	91/10/04	Y
M	KB667	BJN5368	MC00	BAERDFF, B.J.	91/10/04	Y
M	KB660	VSB0370	MC00	DEGRAZIA, V.E. (DEPT	91/10/09	Y
M	KB613	AJY6189	MC00	THRAN, A.J.	91/10/04	Y
M	KB613	HATL	MC00	CHASSIS HATL GATEKEE	91/10/04	Y
M	KB611	PPMALE1	MC00	PPM GATEKEEPER-CHASS	00/00/00	
M	KB667	BFP2409	MC00	PEASE, R. F.	91/10/03	
M	KB678	JGV4166	MC00	VANDERKOOI, J.G. (M	00/00/00	

-END-

Appendix. 4.2
Data # 172

TEST LOT NO.	TEST	DEVICE
TESTED BY		
APPROVED BY	TEXAS INSTRUMENTS — MATERIALS & CONTROLS GROUP, ATTLEBORO, MA 02703	DOC.
DATE		PAGE

FORM 5298

PRESSURE SWITCH DATA Form 21605 TEST NO. [illegible]

DEVICE	DATE REQUESTED	REQUESTED BY	REQUESTED COMPL. DATE
77 PSL 2-4	11/1/91	Steve [illegible]	

PERFORMED BY	DATE STARTED	DATE COMPLETED	APPROVED BY
Jeffrey D. Brennico	11/1/91		

PROJECT TITLE: Ford MT(2) Electronic Speed Control Design [illegible]

CUSTOMER:

PURPOSE OF TEST: Review of validation testing which failed the first time

PROCEDURE: Impulse and Fluid Resistance test per Ford ES [illegible] Recycled or hard-lined

[illegible]	[illegible]	[illegible]	[illegible]	A	B	C	[illegible]	
[illegible]	[illegible]	111/42	5.9	[illegible]	1.50-A	1.16-A	Pass	Fluid Res. and Impulse
"		116/41	5.0	1.85	1.46	1.67		
"		118/41	6.4	1.92	1.44	1.68		
"		115/45	4.6	1.81	1.46	1.63		
"		115/48	4.9	1.83	[illegible]	1.70		
"		120/49	4.2	1.92	1.51	1.71		
"		124/42	5.4	1.85	1.51	1.70		
"		113/44	3.1	1.97	1.47	1.72		
"		125/41	5.6	1.50	1.45	1.11		
"		120/43	5.7	1.81	1.49	1.74		
"		113/50	4.3	1.81	1.48	1.71		
"		124/47	3.5	1.81	1.47	1.71		
[illegible]	[illegible]	117/42	2.7	1.58	1.34	1.74	Pass	Impulse
"		116/42	4.5	1.61	1.37	1.77		
"		125/45	2.2	1.78	1.43	1.71		
"		111/42	4.4	1.58	1.38	1.98		
"		118/51	2.7	1.58	1.76	1.86		
"		124/43	2.1	1.69	1.41	1.85		
"		119/53	2.9	1.66	1.37	1.98		
"		121/47	3.2	1.67	1.38	1.96		
"		111/47	3.6	1.80	1.40	1.85		
"		124/42	3.2	1.53	1.41	1.79		
"		119/45	4.1	1.75	1.42	1.89		
"		119/43	3.4	1.74	1.43	1.79		

(OVER)

TI-NHTSA 004071

Final C/O

	Pre F	Act/Ref	n. Dry	A	B	C
	Pre F	105/54	12.2	1.61	1.35	1.90
		114/50	2.4	1.65	1.35	1.60
		106/56	11.6	1.68	1.55	2.72
		111/56	9.2	1.65	1.37	1.63
		105/53	1.6	1.65	1.40	1.72
		112/57	19.0	1.52	1.33	1.75
		114/55	7.6	1.58	1.32	1.72
		107/56	1.7	1.60	1.34	1.75
		111/56	2.9	1.63	1.36	1.91
		114/58	2.5	1.62	1.39	1.74
		106/60	1.4	1.57	1.33	1.98
		119/56	2.3	1.61	1.35	1.69
	Pre F	105/58	4.9	1.50	1.25	1.68
		110/57	7.6	1.48	1.24	1.66
		113/62	3.8	1.46	1.25	1.82
		111/58	4.2	1.52	1.27	1.75
		113/59	6.1	1.51	1.27	1.90
		116/60	4.1	1.52	1.28	1.65
		115/57	3.2	1.64	1.36	1.74
		111/62	3.2	1.72	1.37	1.68
		110/58	2.8	1.71	1.38	1.75
		116/56	5.8	1.59	1.29	1.65
		111/59	3.4	1.63	1.30	1.69
		110/58	3.8	1.59	1.33	1.64

TI-NHTSA 004072

Appendix 4.3
Data # 173

TEST LOT NO.	TEST	DEVICE
TESTED BY		
APPROVED BY	TEXAS INSTRUMENTS — MATERIALS & CONTROLS GROUP, ATTLEBORO, MA 02703	DOC.
DATE		PAGE

FORM 8295

PRESSURE SWITCH DATA Form 21605 TEST NO. 123-15-24

DEVICE	DATE REQUESTED	REQUESTED BY	REQUESTED COMPL DATE
77FSL2-1	11/1/91	Steve Office	

PERFORMED BY	DATE STARTED	DATE COMPLETED	APPROVED BY
Jeffrey D. Deroche	11/1/91		

PROJECT TITLE: Ford 1991 Electronic Speed Control Coordinate PC

CUSTOMER:

PURPOSE OF TEST: Review of Validation testing which failed the first time

PROCEDURE: Impulse test and Fluid Loss/Impulse test per Ford ES. All Parts required on ACU.

Device #	Ent. Pressure	Act/Act	Rel Disp	Current Consumption A	B	C	Pass		
123-15-01	9(102)	121/57	7.9	1.96	1.56	1.72	Pass		
-02		114/57	6.3	1.92	1.49	1.70			
-03		115/52	5.3	1.84	1.50	1.75			
-04		123/57	9.3	1.86	1.54	1.79			
-05		119/56	3.6	1.86	1.50	1.77			
-06		120/49	4.1	1.93	1.50	1.74		End Res	
-07		122/59	4.4	1.93	1.52	1.75			
-08		125/59	4.1	1.72	1.49	1.74		and Impulse	
-09		124/58	4.3	1.84	1.50	1.75			
-10		123/57	5.0	1.86	1.51	1.75			
-11		121/54	4.5	1.88	1.52	1.73			
-12		119/53	6.2	1.92	1.50	1.73			
123-15-13	9(102)	121/55	3.7	1.78	1.76	1.79	Pass		
-14		122/57	2.4	1.70	1.44	1.76			
-15		118/61	9.3	1.60	1.36	1.81			
-16		135/61	4.0	1.75	1.46	1.84			
-17		122/55	7.1	1.70	1.41	1.69			
-18		125/50	2.7	1.48	1.34	1.85			
-19		128/57	7.5	1.57	1.40	1.80		Impulse	
-20		122/52	2.9	1.67	1.40	1.82			
-21		122/55	3.9	1.57	1.38	1.79			
-22		119/51	4.0	1.70	1.49	1.75			
-23		119/60	2.7	1.57	1.34	1.52			
-24		119/52	5.5	1.55	1.33	1.70			

(OVER)

TI-NHTSA 004074

Final Flow

	Fuel	[illegible]	[illegible]	A	B	C
[illegible]	Pace	114/60	6.3	[illegible]	1.53	1.69
[illegible]		112/58	2.3	1.55	1.29	1.56
[illegible]		113/57	2.0	1.97	1.91	2.69
[illegible]		110/58	1.9	1.60	1.37	1.67
[illegible]		107/60	5.9	1.71	1.42	1.61
[illegible]		112/55	3.0	1.75	1.45	1.61
[illegible]		114/62	21.5	1.66	1.36	1.65
[illegible]		110/57	4.9	1.57	1.30	1.69
[illegible]		112/57	4.2	1.59	1.27	1.61
[illegible]		113/59	34.2	1.99	1.55	1.71
[illegible]		118/56	4.5	1.60	1.34	1.68
[illegible]		110/52	9.6	1.64	1.35	1.78
[illegible]	Pace	112/57	2.0	1.60	1.37	1.75
[illegible]		112/60	39.2	1.69	1.42	1.54
[illegible]		110/58	4.5	1.61	1.37	1.80
[illegible]		111/54	75.6	1.45	1.25	1.86
[illegible]		115/55	97.9	1.56	1.35	1.71
[illegible]		116/57	2.3	1.55	1.24	1.97
[illegible]		117/59	93.6	1.49	1.28	1.77
[illegible]		116/61	1.8	1.58	1.36	1.79
[illegible]		113/58	21.4	1.73	1.47	1.78
[illegible]		110/55	47.2	1.54	1.36	1.75
[illegible]		111/56	40.2	1.75	1.46	1.70
[illegible]		110/55	35.1	1.61	1.39	1.69

Appendix 4.4
Fluid Resistance

TEST LOT NO.	TEST	DEVICE
TESTED BY		
APPROVED BY	TEXAS INSTRUMENTS — MATERIALS & CONTROLS GROUP, ATTLEBORO, MA 02703	DOC.
DATE 81-12-19		PAGE 31

FORM 5298

Form No. 12353

TEST NO. 109832

TECHNICAL SERVICE LABS

11/11

TEST NO. 109832

*PCC I.D.	127	STATE YOUR PROBLEM SAMPLE DESCRIPTION	INFORMATION DESIRED: 3548
REQUESTOR COST CENTER	181	SAMPLES ARE 77PS PRESSURE SWITCHES WITH LEADS & SUB PLUGS	PLEASE PERFORM FLUID RESISTANCE TEST PER FORD MOTOR CO. SPEC ES-F2VC-9F924-AA (ATTACHED)
PROJECT CODE	060		
REQUESTOR	S. OFFILER		
ANALYSIS	12-24		
EXTENSION	1382		
MAIL	SR01		
DATE SUBMITTED	91-11-04		
DATE RECEIVED	91-11-12		
NO. OF SAMPLES	24		
COMPOSITION	MIXED		

REPORT OF RESULTS:

DATE RECEIVED 11/5/91 DATE OUT 12-12

TECHNICIAN			
HOURS WORKED			
PROCEDURE USED			

*PCC I.D.

MC=325	TM=431	JOCY=126	FACIL=514
PC=127	WIRE=432	CLKE=122	FACIL=521
VERS=186	EPD=621	CAN=864	FACIL=531
AFCC=463	PEP=522	AD DEV=296	STAFF=656
IMD=430	CSD=635	EMCD=677	

DISTRIBUTION: White and Yellow - Lab Pink - Requestor

-MSG M#= 205319 FR=ZARN TO=PCQA SENT=12/19/91 11:30 AM
R#=070 ST=C DIV=0050 CC=00101 BY=ZARN AT=12/19/91 11:30 AM

DECEMBER 19, 1991

TO:	RUSTY STRUBLE	RCS2	CC:	TOM CHARBONEAU	TC
	MIKE DeMATTIA	PCQA		JOHN KOURTESIS	MDES
	CHARLIE DOUGLAS	CPPC		STEVE MAJOR	WHLE
	DICK GARIEFY	MFPC		ANDY McGUIRK	PCQA
	PAUL KOTCH	PRK1		ED O'NEILL	EJON
	JOE LAZARZ	JMLS			
	STEVE OFFILER	SBO1		GARY SNYDER	CPPC
	MATT SELLERS	PCME		MARTHA SULLIVAN	CPPC
	BILL SWEET	PCME		RAY TOURANGEAU	PCME
	JIM WATT	PCQA		BILL CONGDON	MFPC
	CLAIRE BALTHAZAR	PSWT		STEVE MCCOOEY	MDES
	TERRY RODRIGUEZ	MFPC		ELAINE ROSE	PCQA

FR: DAVE CZARN ZARN

SJ: FORD CRUISE CONTROL PRESSURE SWITCH START-UP MEETING:
12/19/91 MEETING MINUTES

MEETING

THE NEXT MEETING IS SCHEDULED FOR:

DATE: 1/2/92 (THURSDAY)
TIME: 10:00 - 11:30 AM
PLACE: MARKETING CONFERENCE ROOM

12-20-91
Submittal:
Cover letter:
ISW/Rem... on
Base Trip dim...
Test ...
(PIR/PIST)

77PS

Hexport:

Elco indicated a number of weeks ago that their J512 gage had unacceptable R&R. Matt will follow up to determine where the problem lies and what can be done to improve it.

switch to

. REPORT ON ELCO ISSUES FROM 7/22 VISIT - 10B21 STEEL/.00015" MIN. PLATE/J512 $	KOTCH	ONGOING
. CORRECT ELCO'S J512 GAGE R&R ISSUE	SELLERS	1/23

→ need to notify ... { what's avail? new ISR? SRCA? new ...

Environmental Seal:

. SUBMIT CHANGE NOTICES TO TIER 1'S	DOUGLAS	12/12 (..."long ago")	ORIG. COMP.
. REMOVE -3 AS ALTERNATE FROM P/L	OFFILER	1/30	

Production Issues:

. MAINTAIN RUNNING TOTAL OF L/T (L2-3) SWITCHES LEADING TO 100K FOR AMORTIZATION	STRUBLE	ONGOING

Status Date	Total Shipped
Dec. 19	8092

Last P/C - Jan 37K Feb 54K

. UPDATE PRODUCTION PLANS FOR ALL SWITCHES	DOUGLAS	ONGOING
. UPDATE PRODUCTION COMPONENT AND ASM. DRAWINGS TO CURRENT DESIGN LEVEL	OFFILER	2/13

. CHANGE FREQUENCY OF RING GAGE CALIB. FROM ONCE/6 WEEKS TO ONCE/QTR; KEEP LOG TO DETERMINE IF GAGES ARE OUR OF CAL.	GARIEPY	1/09	

Jim pointed out that the revision level of the customer release drawing must be on the shipping label, and that QC needs to have a way of knowing if it's correct. The team agreed that the Ford release print rev. level (presently = A for L2-3 and B for L2-1) would be used. A system is already in place whereby marketing notifies the affected branch managers when a customer print change is received.

Sensor Assembly Machine:

Automated washer/converter assembly station is targeted to be in place by last week of January. A new vacuum system will be installed on the Kapton pick and place station in this same time frame. Once these improvements are made, the machine effectivity will be evaluated, so the remaining upgrade items can be prioritized.

* UPGRADE KAPTON PICK AND PLACE	SELLERS	01/23	
* INSTALL WASHER/CONV. STATION ON AMI #5	SELLERS	01/30	
* PRIORITIZE REMAINING UPGRADE ITEMS	SELLERS	ONGOING	
. CALL MTG. TO REVIEW AMI#2 UPGRADE PLANS	SELLERS	12/19	ORIG.
		12/19	COMP.

Base Assembly Machine:

Final Assembly Machine:

PV Testing/ISR:

We are on schedule to ship out all information on Friday, 12/20. Good job by the team to pull this all together within the 90 day conditional approval window !

* SUBMIT ADDENDUM TO PC ISR W/CORRECTED BASE DIMENSION & PIST/PIPC DATA	WATT	10/18	ORIG.
		12/20	REV. — complete
* STATUS OF L/T APPROVAL	DOUGLAS	11/28	ORIG.
		01/02	REV.
. COMPLETE PV TESTING & REPORT	OFFILER	12/20	
. SEND SECOND ISR SUBMISSION TO FORD AND TIER 1'S	WATT	12/20	— complete

* Need to [illegible] Design Issues RE: P/C for K-H; P/H; D

Diaphragm Life:

. IMPLEMENT SOLUTION TO DIAPHRAGM LIFE	OFFILER/ SELLERS	ONGOING	
* SET UP MTG TO REVIEW RESULTS OF CRIMP/ DIAPHRAGM LIFE STUDIES	OFFILER	01/09	

Low Differential Switch for MY94

Ford intends to release $6k in January, so we can make the software changes needed for piloting low diff'l (quiet) sensors. The team's goal is to be prepared to ship switches by the end of 2Q92.

* ESTABLISH LIST OF ACTIONS REQ'D TO	SELLERS	1/30

START-UP LOW DIFF'L SWITCH * DETERMINE IF ANY QUALIFICATION IS REQ'D	DOUGLAS	1/30	

Miscellaneous:

. 57 TO 77 CONVERSION: PHASE 1 TESTING	OFFILER/ SELLERS	12/19 12/19	ORIG. COMP.
. COMPLETE DESIGN FMEA	OFFILER	04/18 02/14	ORIG. REV.
. SEND LETTERS TO FORD/GM AND TIER 1'S	WATT/ CEARN	1/30	
. PUT SYSTEM IN PLACE TO REPORT CPK TO FORD QUARTERLY; DETERMINE WHAT TO REPORT	WATT	12/19	

Discussion: Will Ford SQA allow P chart data for calibration ??

for Ford, UK 57L11.2 to 77PS/87PS ??

PRODUCTION PLAN BY MONTH (THOUSANDS)

	P/C 77PSL2-1	L/T 77PSL2-3	
NOV	6.4	13.6	
DEC	35	9	build plan
JAN	31.4	6.9	releases
FEB	60 est.	9.0	releases

MILESTONES	PLANNED		ACTUAL	
77PS ISIR	09/01/91	ORIG.		
	09/20/91	REV.	09/27 -	INITIAL
	12/20/91			FINAL
77PS SOP (TI)	10/91		10/91	

REGARDS,
DAVE CEARN \46-FORD

POLARITY KEY LOC'N ON BLK/BRN BASES

Sensor Assembly Machine:

Mechanization has been released to make modifications to pick & place.

* CORRECTIVE ACTION FOR KAPTON MISFEED	SELLERS/ KOURTESIS	COMP.	
* CALL MTG. TO REVIEW AMI#2 UPGRADE PLANS	KADISEV./ KOURTESIS	10/24 12/19	ORIG. REV.

Base Assembly Machine:

* PRIORITIZE WORK ON THE BEND STATION TO ADDRESS THE COMPRESSED THICKNESS	KOURTESIS	10/21 12/12	ORIG. REV.
* PUT PERMANENT CORRECTIONS IN PLACE FOR THE EA EQUIPMENT (e.g., ELIMINATE THE TEMPORARY SHIMS BY FIXING TOOLING MODS., ETC.)	KOURTESIS	ONGOING	

Final Assembly Machine:

Misc. Manufacturing/QC Equipment:

* MAKE QC P-TESTER COMPAT. W/77'S	KOURTESIS	~~COMP.~~	

PV Testing/ISR:

* BUILD 300 L2-1'S FOR PITTS FOR THEIR ISR (W/CORRECTED BASES)	BURKE/ SELLERS	COMP.	
* RECORD PIPC DATA FROM 300 SWITCH LOT	RODRIGUEZ/ ROSE	10/11 11/21	ORIG. ~~REV.~~ comp.
* SUBMIT ADDENDUM TO ISR'S W/CORRECTED BASE DIMENSION - L/T AND P/C (INCLUDE PIST/PIPC DATA FOR P/C) OK	WATT	10/18 12/15	ORIG. REV.
* COMPLETE FAI ON P/C SWITCHES	ROSE	COMP.	
* BEGIN RE-VALIDATION OF P/C SWITCH	OFFILER	11/01 11/01	ORIG. COMP.
. COMPLETE PV TESTING & REPORT	OFFILER	12/20	

Diaphragm Life:

* REPORT ON TESTING OF WASHER LOTS	OFFILER	COMP.	
* SWAP AMI AND H-L CRIMP DIES AND GIVE SENSORS TO DESIGN FOR EVALUATION	SELLERS/ RODRIGUEZ	COMP.	
* IMPLEMENT SOLUTION TO DIAPHRAGM LIFE	OFFILER/ SELLERS	ONGOING	

Miscellaneous:

. IDENTIFY SWITCH MOUNTING LOCATIONS & SIZE REQMTS FOR FUTURE PLATFORMS	SCHUCK	COMP.	
. 57 TO 77 CONVERSION: PHASE 1 TESTING	OFFILER/ SELLERS	12/19	
. COMPLETE DESIGN FMEA	OFFILER	04/18 10/31	ORIG. REV.

. COMPLETE PROCESS FMEA	SELLERS	07/01	ORIG.
		10/31	REV.
* DETERMINE APPROACH FOR 2A/3A THREAD GAGING ISSUE	CZARN/ MCGUIRK	10/03 11/21	ORIG. REV.
* SREA TO PELKEY - 3A GO GAUGING	OFFILER	12/05	

Close/K-H ✓
Pitts ✓
DANA ✓

PRODUCTION PLAN BY MONTH (THOUSANDS)

	P/C 57PSL5-3	L/T 57PSL5-2	P/C 77PSL2-1	L/T 77PSL2-3
AUG	0	.5	0	0
SEP	2.1	11.2	0	0
OCT	15.2	13.1	.3	1
NOV	10	0	6.4	13.6
DEC	0	0	35	10

MILESTONES	PLANNED	ACTUAL
57 L/T ISIR	11/21/90	11/21/90
57 P/C ISIR	01/15/91	01/15/91
77PS ISIR	09/01/91 ORIG.	
	09/20/91 REV.	09/27 - INITIAL
	12/20/91	FINAL
77PS SOP (TI)	10/91	10/91

REGARDS,
DAVE CZARN \43-FORD

TEXAS INSTRUMENTS

December 19, 1991

Kelsey-Hayes Company
9475 Center Road
Fenton, Michigan 48430

Attn: Mr. Thomas G. Dan
Supplier Quality Assurance

Subj: Part Number 12590701 Pressure Switch (F2VC-9F924-AB)
Supplier Manufacturing Change Request (SMCR)

Ref: Your 12/17/91 Telephone Call

Dear Tom,

Enclosed, please find the SMCR describing the proposed change for the Kelsey-Hayes print number 12590701. We believe that the errors were inadvertantly created from the recent ECN No. 25136 .

After reviewing the SMCR, please let me know if you have any questions or if I can be of any further assistance.

Regards,

Jim Watt
QRA Engineer
Precision Controls Department
Control Products Division

cc: Dave Czarn, MS 12-29; Charlie Douglas, MS 12-33
Rita Gunia, Kelsey-Hayes Purchasing Dept., Fenton, Mi.
Andy McGuirk, MS 12-27
Steve Majors, TI Farmington Hills, Michigan

encl: SCMR, ECN no. 25136

TI-NHTSA 004083

KELSEY-HAYES SUPPLIER MANUFACTURING CHANGE REQUEST

PART NAME: Pressure Switch	REQUEST NUMBER:	BUYER: Rita Gunia	DATE: 12/18.
PART NUMBER: 12590701	PRODUCT LINE:	P.O.C.N. NUMBER:	S/P LEVEL: A
SUPPLIER: Texas Instruments Inc	K-H USING PLANT: Milford	SUPPORTING DATA ATTACHED?	☒YES ☐NO

REASON FOR CHANGE/PURPOSE: 1.) Update and correct Kelsey-Hayes drawing to reflect correct Ford part number and Ford ES specification number.

2.) Kelsey-Hayes ECN No. 25136 (9/5/91) created error. ECN No. 25136 copy is attached.

ORIGINATOR: Jim Watt TITLE: QPA Engr. CONCURRENCE: Charlie Douglas TITLE: Prod. Speci

DESCRIPTION: Kelsey-Hayes drawing no. 12590701-A should be changed to reflect:

1.) Ford Motor Co. Part No. ∇ F2VC-9F924-AB

2.) Ford Motor Co. Specification No. ∇ ES-F2VC-9F924-AA

PLAN FOR VERIFICATION & TESTING: Validation of these changes made with Ford Motor Co.

DISPOSITION - BY KELSEY-HAYES

APPROVE	REJECT	DISTRIBUTION	INSTRUCTIONS, QUALIFICATIONS AND/OR REASON FOR REJECTION:
		K-H PURCHASING	
		PLANT MANUFACTURING ENGINEERING	
		PLANT QUALITY CONTROL	
		K-H PRODUCT ENGINEERING	
		K-H SALES	
		PROCUREMENT or DIVISIONAL QUALITY ASSURANCE	

TI-NHTSA 004084

ISIR LEVEL REQUIRED: ☐NONE ☐1 ☐2 ☐3

KELSEY-HAYES **SUPPLIER MANUFACTURING CHANGE REQUEST**

PART NAME: Pressure Switch	REQUEST NUMBER:	BUYER: Rita Gunia	DATE: 12/12/9
PART NUMBER: 12590701	PRODUCT LINE:	P.O.C.N. NUMBER:	B/P LEVEL: A
SUPPLIER: Tokai Tsushin Kogyo	K-H USING PLANT: TMI LEFORD	SUPPORTING DATA ATTACHED?	☒ YES ☐ NO

REASON FOR CHANGE/PURPOSE: (1) UPDATE AND CORRECT Kelsey-Hayes DRAWING TO REFLECT CURRENT FORD PART NO. AND FORD EC CONFIGURATION NUMBER
[illegible]

ORIGINATOR: [illegible] TITLE: [illegible] CONCURRENCE: [illegible] TITLE: [illegible]

DESCRIPTION: Kelsey-Hayes Drawing No. 12590701-A changed to reflect
Ford Motor Part No. F2VC-9E924-AB
[illegible] F2VC-9F924-AA

PLAN FOR VERIFICATION & TESTING: [illegible]

DISPOSITION - BY KELSEY-HAYES

APPROVE	REJECT	DISTRIBUTION	INSTRUCTIONS, QUALIFICATIONS AND/OR REASON FOR REJECTION:
		K-H PURCHASING	
		PLANT MANUFACTURING ENGINEERING	
		PLANT QUALITY CONTROL	
		K-H PRODUCT ENGINEERING	
		K-H SALES	
		PROCUREMENT or DIVISIONAL QUALITY ASSURANCE	SQA LEVEL REQUIRED: ☐ NONE ☐ 1 ☐ 2 ☐ 3

TI-NHTSA 004085

12/20/91 PGA_C-1.PER

ADDENDUM TO:
REPORT OF ISR TESTING
FORD PASSENGER CAR
ELECTRONIC SPEED CONTROL
DEACTIVATION PRESSURE SWITCH
PS/91/49-A

TEXAS INSTRUMENTS INCORPORATED
CONTROL PRODUCTS DIVISION
PRECISION CONTROLS DEPARTMENT
34 FOREST STREET
ATTLEBORO, MA 02703

TEST LOT NO.	TEST	DEVICE
TESTED BY		
APPROVED BY	TEXAS INSTRUMENTS — MATERIALS & CONTROLS GROUP, ATTLEBORO, MA 02703	DOC.
DATE		PAGE 1

FORM 6295

TABLE OF CONTENTS

1.0 GENERAL

1.1 Customer: Ford Motor Company, Passenger Car Brake Systems Engineering

1.2 TI Part Number: 77PSL2-1

1.3 Customer Part Number: F2VC-9F924-AB

1.4 Specifications: Ford Engineering Specification number (delta) ES-F2VC-9F924-AA

1.5 Date of Completion : 911218

1.6 Quantity of Units Tested: 48

1.7 Disposition of Tested Units:

1.7.1 All devices are retained under quarantine.

1.8 TI test number: 172-15-24
173-15-24

1.9 TI Pressure Switch test report number: PS/91/49-A

TEST LOT NO.	TEST	DEVICE
TESTED BY		
APPROVED BY	TEXAS INSTRUMENTS — MATERIALS & CONTROLS GROUP, ATTLEBORO, MA 02703	DOC.
DATE 91-12-18		PAGE

FORM 5298

2.0 OBJECTIVE

The original battery of tests reported in TI test report number PS/91/49 dated 910920 was performed to demonstrate the ability of TI P/N 77PSL2-1 to conform to customer specifications given in (delta) ES-F2VC-9F924-AA, in fulfillment of the requirements of the Initial Sample Report. During these original tests, problems were noted with diaphragm life during the Impulse test. It was discovered that these problems were related to the automatic pressure sensor assembly crimper, and furthermore that devices assembled on the manually-loaded crimper had no difficulty with diaphragm life. In the interest of meeting strict ISR deadlines, the Impulse portion of the test was successfully re-run using devices assembled on the manually-loaded crimper. However, these devices did not undergo the Fluid Resistance test due to time constraints. A 90-day Alert, # A10166193, was issued on 911002 (see Appendix 4.1). During this 90-day period, efforts to understand and correct the discrepancies of the automatic equipment have been made. The objective of this addendum is to report on the successful completion of the tests (Fluid Resistance and Impulse) which were compromised in the original ISR, using devices built both on the automatic equipment and the manually-loaded equipment. Crimp dies from the manually-loaded equipment were transferred to the automatic equipment in order to produce the successful test devices. The permanent corrective action will be to produce exact duplicates of these crimp dies for the automatic line.

3.0 TEST PROCEDURES AND RESULTS

All switches were tested to Ford Engineering Specification (delta) ES-F2VC-9F924-AA, sections III. M. (Fluid Resistance) and E. (Impulse), with initial and final characterizations consisting of III. A. (Calibration), B. (Voltage Drop), C. (Current Leakage), and D. (Proof). Raw data is included in Appendix 4.2 and 4.3.

3.1 CALIBRATION

3.1.1 Procedure: Calibration is checked at room temperature using ambient air as the pressure medium. Calibration settings, as specified on the part drawing, are actuation (electrical contacts opening) at 90 - 160 psig, and release (contacts reclosing) at 20 psig minimum. For the purpose of stabilization, actuation values are recorded on the sixth cycle, after subjecting the switch to two (2) pressure cycles to 800 psig minimum and back to zero, followed by three (3) cycles to 1.1 times actuation pressure minimum and back to zero. The change in continuity is measured while conducting 750 +/- 50 milliamps at 13.0 +/- 1.0 volts DC.

3.1.2 Equipment: Custom TI designed and built pressure check station, using Heise Model CM96365 pressure gage calibrated on a regular quarterly schedule. Continuity change measured on custom TI designed and built equipment meeting the above electrical parameters.

3.1.3 Initial Results: All 48 devices tested were found to be within specification.

3.1.4 Final Results: All 48 devices tested were found to be within specification.

3.2 VOLTAGE DROP

3.2.1 Equipment: Fluke Model 8020B Digital Multimeter, calibrated quarterly, used in conjunction with the continuity equipment in 3.1.2.

3.2.2. Initial results: The average voltage drop was 4.5 millivolts, and the standard deviation was 1.5. All values are significantly below the specification of 200 millivolts maximum.

3.2.3 Final results: The average voltage drop was 14.3 millivolts, and the standard deviation was 22.7. All values are significantly below the specification of 200 millivolts maximum.

3.3 CURRENT LEAKAGE

3.3.1 Equipment: Associated Research HyPot test unit used as power source for 500 VAC, 60 Hz test circuit. Fluke Model 8020B Digital Multimeter, calibrated quarterly, used to measure voltage crop across a series resistance of one megohm (+/- 5%).

3.3.2 Initial results: Measuring terminals to case with switch closed; measuring terminals to case with switch open; and measuring between the terminals: the maximum current leakage observed less than 2 microamps. All values are significantly below the specification of 100 microamps.

3.3.3. Final results: Same three measurements per device as 3.3.2. All current leakage values were consistent with initial results. The maximum observed was 2.7 microamps. All values are significantly below the specification of 100 microamps.

3.4 PROOF

3.4.1 Procedure: Calibration readings were recorded only after proof testing. Test pressure was 3000 psi per the part drawing.

3.4.1 Equipment: Enerpak model P-392 hydraulic hand pump using Enerpak hydraulic fluid as the pressure medium. Hydraulic fluid is removed from the devices using a combination of vacuum and residue-free solvent Sprayon(TM) Hi-Tech 02002 TF Electrical Contact Cleaner. US Gauge #33714 reading to 5000 psig with 100 psi increments, resolvable to 50 psi., calibrated quarterly. Custom TI designed and built safety enclosure.

3.4.2 Initial Results: No evidence of fluid leakage and no drop in test pressure was observed on any device.

3.4.3 Final Results: No evidence of fluid leakage and no drop in test pressure was observed on any device.

3.5 FLUID RESISTANCE

3.5.1 Devices tested: 172-15-01 thru -12
173-15-01 thru -12.

3.5.2 Equipment: Fluids as called out in ES table (frame 12 of 18); appropriate beakers and storage apparatus; vented hood.

3.5.3 Results: The 24 devices were subject to the Impulse test following completion of Fluid Resistance.

3.6 IMPULSE

3.6.1 Devices tested: 172-15-01 thru -24
173-15-01 thru -24.

3.6.2 Procedure: 172-15-13 thru -24 and 173-15-13 thru -24 were run together on the Impulse test per the ES. Devices 172-15-01 thru -12 and 173-15-01 thru -12 were subject to the Fluid resistance test first, then run together on the Impulse test.

3.6.3 Equipment: Thermotron model S-4 Mini-Max environmental chamber capable of -55 C to +200 C, humidity uncontrolled. Custom TI designed and built cycler, utilizing Enerpak integrated hydraulic pressure source, TI315 Programmable Logic Controller, Moog servovalve and controller, Simpson signal generator, and opposing-piston fluid isolators, to produce a hydraulic-fluid flow-type primary with a brake-fluid dead-end-type secondary terminated with a 24-station manifold equipped with internal heaters. Capability to 5 Hz at 0-1450 psig cycle. Custom TI designed and built 24 station Switch Monitor Circuit which automatically stops the cycler in the event of abnormal switch action, defined as continuity change which does not track the signal from the signal generator. Thermocouple readouts calibrated quarterly. 12-station inductive load bank, per the schematic found in the ES (frame 18 of 18; figure 4.) used in the last 25K cycles.

3.6.4 Results: All devices passed.

Appendix 4.1
Alert

TEST LOT NO.	TEST	DEVICE
TESTED BY		
APPROVED BY	TEXAS INSTRUMENTS — MATERIALS & CONTROLS GROUP, ATTLEBORO, MA 02703	DOC.
DATE		PAGE

FORM 6298

ALERT DETAIL
****

PRINT DATE/TIME: 91/10/11 09:39
PAGE: 1

ALERT NUMBER
A10144193

ORIGIN ACTIVITY: NC08 CHASSIS PED (INCS)
ORIGINATOR: PEASE, D. F.
CPSC: 660685

TYPE: (U) NRE PPM
DATE: 91/10/02
PHONE: 52-37955
NOTICE NO:

STATUS: A
LOCATION: RM 3001, BLDG05, D
RESOLVING NOTICE:

ALERT DESC: PERMIT TEXAS INSTRUMENTS TO HELP SPEED CONTROL REDUNDANT DEACTIVATION SWITCH, F2VC-9F924-AB, WITH EXCEPTION TO THE INTENDED MANUFACTURING/ASSEMBLY PROCESS CONSISTING OF

PRODUCTS AFFECTED: 1992 LINCOLN TOWN CAR, CROWN VICTORIA, GRAND MARQUIS WITH NEW GENERATION SPEED CONTROL.

MODEL CODES: CVFA CVFM CVVB
MODEL YEAR: 92
PLANTS AFFECTED: KA17
MFG CONCERN CNTRL:
PROGRAM:
QTY:
EST INCRM VAR COST: -0.92
EST INCRM VER COST:
USEF MEASURE:
SUPP DOCS:

ENG CONCERN CNTRL:
EFFECTIVE IN:
EXTENSION CODE: 000
TIME: 900
EST INCRM TOOL COST: 0
EST INCRM FAC COST: 0
APPEARANCE:

INVALID:
OUT:
DISP: U
EST INCRM LAB COST: 0.00
WT EFFECT: 0.0000

********** AFFECTED PARTS **********

AFF PART NO:
CPSC: 660685
ACT:
INTER:
AFF PART DESC:
NOTICE:
SUPPLY/LOCAL:
AVAIL:
SUPPLIER:
SEL IND: N
FUNC REQD:

********** FURTHER DESCRIPTION/ALERT RESOLUTION/REASON FOR REJECTION ETC. **********

USERID: DFP2409
ACTIVITY: NC08
ENTRY DATE: 91/10/02
ALERT DESC:
USING A MANUALLY LOADING SENSOR CRIMPING MACHINE VERSUS THE AUTOMATIC IN LINE LOADED CRIMPER. THE AUTOMATIC CRIMPER HAS BEEN DETERMINED TO HAVE A TEST TO BE DEFINED DEFICIENCY THAT RESULTS IN PART FAILURE TO MEET THE REQUIRED NUMBER OF CYCLE IN THE IMPULSE TEST. THE SUPPLIER IS GIVEN A 90 DAY PERIOD TO RESOLVE THE ISSUE. THE MANUALLY CRIMPED PARTS PASS THE EE TEST. THIS DEVIATION PERMITS INCORPORATION OF THE -AB LEVEL SWITCH AND DELETION OF THE INTERIM -BB SWITCH FOR A COST REDUCTION OF $.92. THE -AB SWITCH IS PIA TO END ITEM

USERID: DFP2409
ACTIVITY: NC08
ENTRY DATE: 91/10/03
ALERT DESC:
PROPORTIONING VALVES F2AC-2B091-BA, F2VC-2B091-CC, AND JUNCTION BLOCK F2AC-2C320-CB.

USERID: LAZ0686
ACTIVITY: NC08
ENTRY DATE: 91/10/04
ALERT DESC:
OK. SUPVR. APPROVAL REQ'D. IF PHYSX IS AFFECTED. LAZ

USERID: AJH5366
ACTIVITY: NC08
ENTRY DATE: 91/10/04
ALERT DESC:

-MORE-

ALERT DETAIL

PRINT DATE/TIME: 91/10/11 09:59
PAGE: 2

ALERT NUMBER
A10146193

ORIGIN ACTIVITY: NC00 CHASSIS PEO (LECG)
ORIGINATOR: PEASE, D. F.
CPSC: 060665

TYPE: (N) NSE FPN
DATE: 91/10/02
PHONE: 32-37955
NOTICE NO:

STATUS: A
LOCATION: RM 3001, BLDG05, D
RESOLVING NOTICE:

FURTHER DESCRIPTION/ALERT RESOLUTION/REASON FOR REJECTION ETC.

USERID: BJM5368 ACTIVITY: NC00 ENTRY DATE: 91/10/04
ALERT DESC:
FMVSS NOT AFFECTED BJM

USERID: JL91824 ACTIVITY: NC00 ENTRY DATE: 91/10/07
ALERT DESC:
NOTES J SIMMONS 32-37974

APPROVALS

REGION	DEPARTMENT	USERID	ACTIVITY	APPROVER'S NAME	DATE APPROVED	APPROVAL
N	KB667	DFP2409	NC00	PEASE, D. F.	91/10/02	
N	KB667	JL91824	NC00	SIMMONS, J.L.	91/10/07	Y
N	KB665	LAZ0684	NC00	ZIELINSKI, L.A.	91/10/04	Y
N	KB667	BJM5368	NC00	MAEROFF, B.J.	91/10/04	Y
N	KB660	VSD0370	NC00	DEGRAZIA, V.E. (DEPT	91/10/09	Y
N	KB613	AJY6189	NC00	TURAN, A.J.	91/10/04	Y
N	KB613	MATL	NC00	CHASS|& MATL MATEKEE	91/10/04	Y
N	KB611	FPMALAT	NC00	FPN GATEKEEPER-CHASS	00/00/00	
N	KB667	DFP2409	NC00	PEASE, D. F.	91/10/03	
N	KB678	JGV6164	NC00	VANDERKOOI, J.G. (N	00/00/00	

-END-

TI-NHTSA 004099

Appendix. 4.2
Data # 172

TEST LOT NO.	TEST	DEVICE
TESTED BY		
APPROVED BY	TEXAS INSTRUMENTS — MATERIALS & CONTROLS GROUP, ATTLEBORO, MA 02703	DOC.
DATE 81-12-14		PAGE 15

FORM 5296

PRESSURE SWITCH DATA Form 21605 TEST NO. 172-[illegible]

DEVICE	DATE REQUESTED	REQUESTED BY	REQUESTED COMPL DATE
77 PSL 2-9	11/1/91	Steve Cs[illegible]	

PERFORMED BY	DATE STARTED	DATE COMPLETED	APPROVED BY
Jeffrey D. Pennington	11/1/91		

PROJECT TITLE: Ford MY'91 Electronic Speed Control Development

CUSTOMER:

PURPOSE OF TEST: Review of Validation testing which failed the first time

PROCEDURE: Impulse and Fluid Pressure/Impulse test per Ford ES Parts Crimped or hard-line

Device #	Date	Pressure	No. Cycles	A	B	C	Fixed		
172-[illegible]	9/11/91	103/42	5.9	1.[illegible]-A	1.50-A	1.16-A	Pass		
[illegible]		116/41	5.9	1.55	1.46	1.67			
[illegible]		118/41	5.9	1.53	1.44	1.68			
[illegible]		118/45	4.6	1.51	1.46	1.63			
[illegible]		115/45	4.7	1.83	[illegible]	1.72		Fluid Pr	
[illegible]		120/48	4.2	1.52	1.51	1.71			
[illegible]		124/42	5.9	1.55	1.51	1.76		and Impulse	
[illegible]		113/44	3.1	1.57	1.47	1.72			
[illegible]		125/41	3.6	1.50	1.45	1.71			
[illegible]		100/47	5.7	1.51	1.49	1.76			
[illegible]		113/50	4.3	1.51	1.48	1.71			
[illegible]		124/47	3.3	1.51	1.47	1.71			
172-[illegible]	9/11/91	117/47	2.7	1.58	1.34	1.74	Pass		
[illegible]		116/32	4.5	1.61	1.27	1.77			
[illegible]		125/45	2.7	1.78	1.43	1.71			
[illegible]		121/42	4.4	1.58	1.33	1.73			
[illegible]		112/51	2.7	1.58	1.36	1.86			
[illegible]		124/48	3.1	1.63	1.41	1.85			
[illegible]		101/53	3.3	1.66	1.37	1.83		Impulse	
[illegible]		120/47	3.1	1.67	1.39	1.86			
[illegible]		100/47	3.6	1.61	1.36	1.85			
[illegible]		124/42	3.3	1.63	1.41	1.79			
[illegible]		109/45	4.1	1.75	1.42	1.69			
[illegible]		109/43	3.9	1.74	1.45	1.79			

KIVERI

Final C/O

	Proof	Act/Act	n. D.f	A	B	C
(72) 11-01	P-55	105/54	12.2	1.61	1.35	1.92
-02		109/52	2.4	1.63	1.35	1.60
-03		105/56	11.6	1.60	1.33	2.72
-04		110/56	9.9	1.65	1.37	1.63
-05		105/55	1.6	1.15	1.40	1.72
-06		110/57	14.0	1.62	1.33	1.75
-07		110/55	3.6	1.58	1.32	1.72
-08		107/54	1.7	1.60	1.34	1.72
-09		111/56	2.9	1.63	1.36	1.91
-10		109/59	2.5	1.68	1.39	1.74
-11		106/60	1.4	1.57	1.33	1.90
-12		109/56	2.3	1.61	1.35	1.69
(72-05-17)	Proof	105/59	4.9	1.60	1.25	1.68
-14		110/57	3.6	1.48	1.24	1.66
-15		109/62	3.8	1.46	1.26	1.82
-16		111/58	4.2	1.52	1.27	1.75
-17		113/59	6.1	1.51	1.27	1.70
-18		116/60	4.1	1.52	1.28	1.65
-19		114/59	3.7	1.64	1.36	1.74
-20		111/62	3.2	1.72	1.37	1.68
-21		110/59	2.9	1.71	1.39	1.75
-22		116/58	5.9	1.59	1.29	1.65
-23		111/59	3.4	1.63	1.38	1.69
-24		110/58	3.8	1.59	1.32	1.64

Appendix 4.3
Data # 173

TEST LOT NO.	TEST	DEVICE
TESTED BY		
APPROVED BY	TEXAS INSTRUMENTS	MATERIALS & CONTROLS GROUP ATTLEBORO, MA 02703	DOC.
DATE		PAGE

FORM 8296

TI-NHTSA 004103

PRESSURE SWITCH DATA Form 21605 TEST NO. 173-15-24

DEVICE	DATE REQUESTED	REQUESTED BY	REQUESTED COMPL DATE
77856J-1	11/11/91	Steve Effler	

PERFORMED BY	DATE STARTED	DATE COMPLETED	APPROVED BY
Jeffrey D. Dorrance	11/12/91		

PROJECT TITLE: Ford 1992 Electronic Speed Control Development

CUSTOMER:

PURPOSE OF TEST: Review of Validation testing which failed the first time

PROCEDURE: Impulse test and Fluidics/Impulse test per Ford ES. All Data scaled to AMS.

Device #	Scale psi	Act/Act	Actuator	A	B	C	Pass		
173-15-01	9(100)	121/57	7.9	1.56	1.55	1.78			
-02		124/52	6.3	1.92	1.49	1.72			
-03		125/52	5.5	1.84	1.52	1.79			
-04		123/57	4.3	1.86	1.54	1.79			
-05		124/56	3.6	1.86	1.52	1.77			
-06		120/49	4.1	1.93	1.50	1.74		Fluid Res	
-07		121/59	4.4	1.93	1.52	1.75			
-08		125/59	4.1	1.72	1.48	1.74		and Impulse	
-09		120/52	4.3	1.84	1.50	1.75			
-10		123/57	5.0	1.86	1.51	1.75			
-11		121/54	4.5	1.88	1.52	1.77			
-12		119/53	6.2	1.92	1.50	1.73			
173-15-13	9(100)	121/55	3.3	1.78	1.76	1.79	Pass		
-14		122/57	2.4	1.70	1.44	1.76			
-15		119/61	9.3	1.60	1.36	1.81			
-16		125/61	4.0	1.75	1.46	1.84			
-17		122/55	7.1	1.70	1.41	1.69			
-18		115/50	2.7	1.44	1.34	1.88			
-19		120/57	4.5	1.67	1.42	1.82		Impulse	
-20		123/62	2.9	1.67	1.40	1.82			
-21		122/53	3.9	1.59	1.38	1.79			
-22		119/51	4.0	1.70	1.49	1.73			
-23		119/60	3.9	1.57	1.39	1.82			
-24		119/51	8.8	1.55	1.33	1.90			

(OVER)

Final Clay

	Final	[illegible]	[illegible]	Corrected Reading A	B	C
[illegible]	Pass	111/60	6.3	1.64	1.53	1.63
[illegible]		112/58	2.3	1.55	1.29	1.56
[illegible]		113/57	2.0	1.92	1.91	2.69
[illegible]		118/58	1.8	1.60	1.37	1.67
[illegible]		117/60	5.9	1.71	1.42	1.61
[illegible]		113/56	3.0	1.75	1.45	1.61
[illegible]		114/62	21.5	1.66	1.35	1.65
[illegible]		110/57	6.9	1.53	1.30	1.69
[illegible]		112/59	4.2	1.58	1.27	1.61
[illegible]		113/59	34.2	1.85	1.55	1.71
[illegible]		118/58	4.5	1.60	1.34	1.68
[illegible]		114/52	2.6	1.64	1.35	1.98
[illegible]	Pass	112/57	2.0	1.60	1.37	1.75
[illegible]		110/60	39.2	1.69	1.42	1.59
[illegible]		118/58	4.5	1.61	1.37	1.50
[illegible]		111/54	75.6	1.45	1.25	1.86
[illegible]		115/55	97.9	1.56	1.35	1.71
[illegible]		106/57	2.3	1.55	1.09	1.93
[illegible]		117/59	92.6	1.99	1.28	1.77
[illegible]		115/61	1.9	1.59	1.36	1.79
[illegible]		112/59	21.4	1.77	1.47	1.78
[illegible]		106/55	97.3	1.58	1.36	1.75
[illegible]		111/56	4.62	1.75	1.48	1.70
[illegible]		108/55	35.1	1.61	1.39	1.69

Appendix 4.4
Fluid Resistance

TEST LOT NO.	TEST	DEVICE
TESTED BY		
APPROVED BY	TEXAS INSTRUMENTS — MATERIALS & CONTROLS GROUP, ATTLEBORO, MA 02703	DOC.
DATE 91-12-16		PAGE 31

FORM 8398

Form No. 1883

TEST NO. 109832

TECHNICAL SERVICE LABS

11/4/91

TEST NO. 109832

Form No.	127	STATE YOUR PROBLEM / SAMPLE DESCRIPTION	INFORMATION DESIRED: 3548
Requestor Cost Center	181	SAMPLES ARE 77PS PRESSURE SWITCHES WITH LEADS & END PLUGS	PLEASE PERFORM FLUID RESISTANCE TEST PER FMVSS MOTOR CO. SPEC ES-F2VE-9F924-AA (ATTACHED)
Product Code	060		
Requestor	L. OFFILLA		
Validation	12-24		
Extension	1382		
MRD	5801		
Date Submitted	91-11-04		
Date Required	91-12-12		
No. of Samples	24		
Comments	MUSTANG		

REPORT OF RESULTS:

DATE RECEIVED 11/5/91 DATE OUT 12-12

Technician			
Hours Worked			
Procedure Used			

*PCC I.D.

MC=328	TM=431	JOCY=126	FACIL=614
PC=127	WIRE=432	CLKE=182	FACIL=621
VERS=188	EPD=621	CAN=684	FACIL=531
AFCC=463	PEP=622	AD DEV=286	STAFF=655
IMD=430	CSD=636	EMCD=677	

DISTRIBUTION: White and Yellow - Lab Pink - Requestor

REPORT OF ISR TESTING
FORD PASSENGER CAR
ELECTRONIC SPEED CONTROL
DEACTIVATION PRESSURE SWITCH
PS/91/49

TEXAS INSTRUMENTS INCORPORATED
CONTROL PRODUCTS DIVISION
PRECISION CONTROLS DEPARTMENT
34 FOREST STREET
ATTLEBORO, MA 02703

TEST LOT NO.	TEST	DEVICE
TESTED BY		
APPROVED BY	TEXAS INSTRUMENTS — MATERIALS & CONTROLS GROUP, ATTLEBORO, MA 02703	DOC.
DATE 91-03-29		PAGE 1

FORM 6298

TI-NHTSA 004109

TABLE OF CONTENTS

1.0 **GENERAL**

1.1 Customer: Ford Motor Company, Passenger Car Brake Systems Engineering

1.2 TI Part Number: 77PSL2-1

1.3 Customer Part Number: F2VC-9F924-AB

1.4 Specifications: Ford Engineering Specification number (delta) ES-F2VC-9F924-AA

1.5 Date of Completion: 910920

1.6 Quantity of Units Tested: 104

1.7 Disposition of Tested Units:

1.7.1 Devices 156-15-37 thru -42 were destroyed in Burst testing (3.5)

1.7.2 All other devices are retained under quarantine.

1.8 TI test series number: 156-15-104

1.9 TI Pressure Switch test report number: PS/91/49

TEST LOT NO.	TEST	DEVICE
TESTED BY		
APPROVED BY	TEXAS INSTRUMENTS — MATERIALS & CONTROLS GROUP, ATTLEBORO, MA 02703	DOC.
DATE 91-09-20		PAGE

FORM 6298

2.0 OBJECTIVE

This battery of tests was performed to demonstrate the ability of 77PSL2-1 to conform to customer specifications given in (delta) ES-F2VC-9F924-AA, in fulfillment of the requirements of the Initial Sample Report. Units tested were built using fully qualified production components and production assembly equipment.

3.0 TEST PROCEDURES AND RESULTS

All switches were tested to Ford Engineering Specification (delta) ES-F2VC-9F924-AA. A copy of this ES is included in Appendix 4.1. Procedural details are therefore omitted from the presentation of results in most cases. In those instances where the ES procedure methodology is modified, a complete explanation of the actual procedure is presented. For all tests, raw data is included in Appendix 4.2.1.

A flow chart is included in the ES (frame 4 of 18), as follows: All test devices are to be subject to an initial characterization consisting of Calibration, Voltage Drop, Current Leakage, and Proof. Devices are then divided into groups per the flow chart and subject to the indicated tests in the indicated order. Finally, devices are subject to a final characterization. However, it became necessary to deviate from this exact procedure as described below. We believe that this alternate procedure still meets the intent of the ES.

During the first phase of Impulse (3.10) testing (12 virgin devices) it was discovered that the pressure-sensing assemblies were improperly built, resulting in a reduction in life of the diaphragm. During investigation of the root cause of diaphragm problems, it was learned that the final crimp station on the automatic assembly equipment experiences this problem only on this particular part; all other devices built on this equipment are not subject to this. Witness the good results obtained with the Light Truck (F3TA-9F924-AA) version of this test (see data in Appendix 4.2.7), built on the automatic assembly equipment, as supporting evidence.

3.0 TEST PROCEDURES AND RESULTS, CONTINUED

While analysis and permanent corrective actions are ongoing, it was also learned that the manual assembly equipment which performs the final crimp produces pressure-sensing assemblies which have acceptable life. This equipment was used 4Q90 during validation of F2VC-9F924-BB (TI P/N 57PSL5-3) which uses exactly the same pressure sensing assembly, as well as to produce the rebuilt Impulse devices (157-15-81 thru -104) and will continue to be used until such time as the permanent corrective actions are in place on the automatic equipment and re-validation is completed.

To expedite completion of the switch validation, 12 of the rebuilt parts were not subjected to the Fluid Resistance test (3.9). However, this will not affect the results of the Impulse test in any way, since the various fluids do not come into contact with the diaphragm. Invoking similarity with the Light Truck (F3TA-9F924-AA) version of this test which was run simultaneously, all devices undergoing Fluid Resistance in this test easily passed their subsequent Impulse test.

3.1 CALIBRATION

3.1.1 Procedure: Calibration is checked at room temperature using ambient air as the pressure medium. Calibration settings, as specified on the part drawing, are actuation (electrical contacts opening) at 200 - 300 psig, and release (contacts reclosing) at 40 psig minimum. For the purpose of stabilization, actuation values are recorded on the sixth cycle, after subjecting the switch to two (2) pressure cycles to 800 psig minimum and back to zero, followed by three (3) cycles to 1.1 times actuation pressure minimum and back to zero. The change in continuity is measured while conducting 750 +/- 50 milliamps at 13.0 +/- 1.0 volts DC.

3.1.2 Equipment: Custom TI designed and built pressure check station, using Heise Model CM96365 pressure gage calibrated on a regular quarterly schedule. Continuity change measured on custom TI designed and built equipment meeting the above electrical parameters.

3.1.3 Initial Results: All 72 original devices tested were found to be within specification.

3.1.4 Final Results: 42 surviving original devices were found to be within specification. 6 were destroyed in Burst (3.5), 24 were aborted from Impulse (3.10). 24 additional devices which underwent Impulse but had no initial characterization were also found to be within specification at the completion of testing.

3.2 VOLTAGE DROP

3.2.1 Equipment: Fluke Model 8020B Digital Multimeter, calibrated quarterly, used in conjunction with the continuity equipment in 3.1.2.

3.2.2. Initial results: The average voltage drop was 4.9 millivolts, and the standard deviation was 1.9. All values are significantly below the specification of 200 millivolts maximum.

3.2.3 Final results: The average voltage drop was 6.4 millivolts, and the standard deviation was 3.5.

3.3 CURRENT LEAKAGE

3.3.1 Equipment: Associated Research HyPot test unit used as power source for 500 VAC, 60 Hz test circuit. Fluke Model 8020B Digital Multimeter, calibrated quarterly, used to measure voltage crop across a series resistance of one megohm (+/- 5%).

3.3.2 Initial results: Measuring terminals to case with switch closed; measuring terminals to case with switch open; and measuring between the terminals: the maximum current leakage observed was 2.3 microamps. All values are significantly below the specification of 100 microamps.

3.3.3. Final results: Same three measurements per device as 3.3.2. All current leakage values were consistent with initial results. All values are significantly below the specification of 100 microamps.

3.4 PROOF

3.4.1 Procedure: Calibration readings were recorded only after proof testing. Test pressure was 3000 psi per the part drawing.

3.4.1 Equipment: Enerpak model P-392 hydraulic hand pump using Enerpak hydraulic fluid as the pressure medium. Hydraulic fluid is removed from the devices using a combination of vacuum and residue-free solvent Sprayon(TM) Hi-Tech 02002 TF Electrical Contact Cleaner. US Gauge #33714 reading to 5000 psig with 100 psi increments, resolvable to 50 psi., calibrated quarterly. Custom TI designed and built safety enclosure.

3.4.2 Initial Results: No evidence of fluid leakage and no drop in test pressure was observed on any device.

3.4.3 Final Results: No evidence of fluid leakage and no drop in test pressure was observed on any device.

3.5 BURST

3.5.1 Devices tested: 156-15-37 thru -42.

3.5.2 Procedure: A pressure of 7000 psig was applied and held for 30 seconds minimum. Pressure was then increased slowly until failure. Failure is typically signalled by a sudden drop in test pressure of several hundred psi, which corresponds with the first point at which some internal component reaches irreversible plastic deformation and causes an increase in internal volume. The peak pressure attained as this occurs is defined as the bursting point.

3.5.3. Equipment: same as 3.4.1., with the addition of Enerpak gauge reading to 10,000 psig with 100 psi increments, resolvable to 50 psi., calibrated quarterly.

3.5.4. Results: All six devices passed 30 seconds at 7000 psig without evidence of fluid leakage or drop in test pressure. The failure point defined in 3.5.2 was recorded, and a Weibull plot generated. See data section 4.2.2. Using the statistical acceptance criteria from the ES (frame 3 of 18), a minimum Weibull slope (beta) of 31.5 and a minimum Characteristic Life (theta) of 7680.7 psi was calculated at 90% confidence. The 0.72 reliability at 90% confidence is 7414 psi. Thus, the parts exceed the burst specification of 7000 psig by 414 psi at the Ford-specified confidence and reliability levels.

3.6 VIBRATION

3.6.1 Devices tested: 156-15-43 thru -48.

3.6.2 Equipment: Vibration table, Ling, model A395 with Hewlett-Packard model 5427 controls. Air tank with 350 psig minimum pressurized Nitrogen used to actuate devices with at least 1.1 times maximum actuation specification on part drawing; 300 psig * 1.1 = 330 psi minimum.

3.6.3 Results: All six switches met the acceptance criteria in the ES (frame 9 of 18; section III. I. 2.).

3.7 VACUUM

3.7.1 Devices tested: 156-15-49, -50, -52 thru -55.

3.7.2 Equipment: Kinney vacuum pump. Sensotec pressure transducer range 0-25 psia calibrated quarterly, with Fluke model 8020B Digital Multimeter readout, calibrated quarterly.

3.7.3 Results: All six devices met the acceptance criteria in the ES (frame 10 of 18; section III. K. 2.).

3.8 TEMPERATURE CYCLE

3.8.1 Devices tested: 156-15-56 thru -61.

3.8.2 Equipment: Thermotron model S-4 Mini-Max environmental chamber capable of -55 C to +200 C, humidity uncontrolled. Custom TI designed and built cycler, utilizing Enerpak integrated hydraulic pressure source, TI315 Programmable Logic Controller, Moog servovalve and controller, Simpson signal generator, and opposing-piston fluid isolators, to produce a hydraulic-fluid flow-type primary with a brake-fluid dead-end-type secondary terminated with a 24-station manifold equipped with internal heaters. Capability to 5 Hz at 0-1450 psig cycle. Custom TI designed and built 24 station Switch Monitor Circuit which automatically stops the cycler in the event of abnormal switch action, defined as continuity change which does not track the signal from the signal generator. Thermocouple readouts calibrated quarterly.

3.8.3 Results: All six devices met the acceptance criteria in ES (frame 11 of 18; section III. L. 2.). Data sheet in section 4.2.4 shows actual fluid and ambient temperatures attained at each cycle.

3.9 FLUID RESISTANCE

3.9.1 Devices tested: 156-15-01 thru -36.

3.9.2 Equipment: Fluids as called out in ES table (frame 12 of 18); appropriate beakers and storage apparatus; vented hood.

3.9.3 Results: The 36 devices were divided into groups as follows for subsequent testing. Results of these tests are reported below.

3.9.3.1 Impulse (3.10), -01 thru -12

3.9.3.2 Terminal Strength (3.11), -13 thru -24.

3.9.3.3 Humidity (3.12), -25 thru -30.

3.9.3.4 Salt Spray (3.13), -31 thru -36.

3.10 IMPULSE

3.10.1 Devices tested: 156-15-81 thru -104.

3.10.2 Procedure: 24 virgin devices were run as opposed to 12 virgins and 12 from Fluid Resistance. This is discussed in detail in section 3.0. The parameters given in the ES (frame 7 of 18, section III. E. 1.) are followed explicitly.

3.10.3 Equipment: same as 3.8.2 with the addition of a 12-station inductive load bank, per the schematic found in the ES (frame 18 of 18; figure 4.) used in the last 25K cycles.

3.10.4 Results/Discussion: Pre-characterization was not performed. After completion of the 500K cycles, all 24 devices passed the acceptance criteria found in the ES (frame 7 of 18, section III. E. 2).

This test may be regarded as the one of the most rigorous. This test is run at elevated temperature (135 C fluid), elevated pressure (1450 psig, 2 Hz), and total cycles (applying brakes 5 times per mile for 100,000 miles) which exceed conditions typically found in actual motor vehicles.

3.11 TERMINAL STRENGTH

3.11.1 Devices tested: 156-15-13 thru -24.

3.11.2 Equipment: Custom TI designed and built fixtures for gaging terminal movement after force application and for application of impact via a pendulum. This equipment is regularly used on the 57PS/77PS assembly lines in testing to TI Quality Assurance Specifications.

3.11.3 Results: All twelve devices passed the acceptance criteria found in the ES (frame 10 of 18; section III. J. 2.).

3.12 HUMIDITY

3.12.1 Devices tested: 156-15-25 thru -30.

3.12.2 Equipment: Humidity chamber RK model 5S.

3.12.3 Results/Discussion: Please note that performing a full characterization per the ES consists of actuation, release, millivolt drop, current leakage, and proof. This battery of tests when performed on six (6) devices takes approximately 2 hours to complete. Therefore "Within 15 minutes..." called out in the ES (frame 8 of 18, section III. G. 2. a.) is an acceptance requirement that is physically impossible to meet. Every effort is made to complete final characterization within the two hour period stated above.

All six devices passed the acceptance criteria found in the ES (frame 8 of 18; section III. G. 2.).

3.13 SALT SPRAY

3.13.1 Devices tested: 156-15-31 thru -36.

3.13.2 Equipment: Harshaw salt spray chamber.

3.13.3 Results: All six devices passed the acceptance criteria found in the ES (frame 8 of 18, section III. H. 2.).

Appendix 4.1
Ford Engineering Specification
(delta) ES-F2VC-9F924-AA

Engineering Specification

PART NAME	PART NUMBER
SWITCH ASSEMBLY - SPEED CONTROL DEACTIVATE	▽ ES-F2VC-9F924-AA

LET																		
PR																		
LET																		
PR																		

DATE	LET	PR	REVISIONS	DR	CK

REFERENCE	
PREPARED/APPROVED BY	
CHECKED BY	DETAILED
CONCURRENCE/APPROV SIGNATURES	
DESIGN ENGINEERING SUPER	
DESIGN ENGINEERING MC	
MANUFACTURING ENGR	
QUALITY CONTROL	
PURCHASING	
SUPPLIER QUALITY ASSISTA	
ELECTRONICS DIVIST	

SWITCH ASSEMBLY - SPEED CONTROL DEACTIVATE

I. General

This specification covers the test requirements for the speed control deactivate switch -9F924- used in the electronic speed control system. Design changes on the switch assembly or its components shall not be made without compliance to Section V of this specification and written approval from the releasing Production Engineering Office.

This engineering specification is a supplement to the released drawing on the above part, and all requirements herein must be met in addition to all other requirements of the part drawing. Minimum measures necessary for demonstrating compliance to these requirements are given in each section.

The engineering tests, sample sizes, and test frequencies contained within this engineering specification reflect the minimum requirements established to provide a regular evaluation of conformance to design intent. The engineering test program is intended as a supplement to normal material inspections, dimensional checking and in-process controls, and should in no way adversely influence other inspection operations.

Q1 suppliers may implement different test sample sizes and frequencies providing these changes have been included in an alternate Control Plan approved by the design responsible Product Engineering Office and concurred in by SQA.

II. PRODUCTION VALIDATION AND IN-PROCESS TESTS

- Production Validation (PV) Tests must be completed satisfactorily with parts from production tooling (and processes where possible) before ISIR approval and authorization for shipment of production parts can be affected. Parts must be revalidated completely, or per Section V whenever any change is made which could possibly affect part function or performance.

- In-Process Test Phase 1 (IP-1) - IP-1 tests are used to demonstrate process capability and must be completed using initial production parts from production tooling and processes prior to first production shipment approval. IP-1 tests are to continue in effect until process capability is demonstrated.

- In-Process Tests Phase 2 (IP-2) - IP-2 test program may be implemented only after process capability has been established. Tests must be completed with production parts on a continuing basis. Samples for these tests must be selected on a random basis to represent the entire production population as much as possible. In the event that any of the requirements in these tests is not met, the reaction plan specified in Ford Q101 Section III.E.3, "ES Test Performance Requirements" shall be invoked.

SECTION III. TABLE OF TESTS

Item	Test Name Functional Tests	PRODUCTION VALIDATION Minimum Sample Size	PRODUCTION VALIDATION Statistical Test Acceptance Criteria	IN-PROCESS IP-1 Minimum Sample Size	IN-PROCESS IP-1 Statistical Test Acceptance Criteria	IN-PROCESS IP-2 Minimum Sample Size	IN-PROCESS IP-2 Statistical Test Acceptance Criteria
III.							
▽ A	Calibration	72	P90-.96	100%	All Must Pass	100%	All Must Pass
B	Voltage Drop	72	P90-.96	12/Mo.	P90-.84	4/Lot	" " "
C	Current Leakage	72	P90-.96	3/Mo.	P90-.56	4/Lot	" " "
D	Proof Test	72	P90-.96	12/Mo.	P90-.84	4/Lot	" " "
F	Burst	6	P90-.72	3/Mo.	P90-.56	4/Lot	" " "
I	Vibration	6	P90-.72	3/Mo.	P90-.56	6/6 Mo.	P90 .72
J	Terminal Strength	12	P90-.84	6/Mo.	P90-.72	4/Lot	All Must Pass
K	Vacuum	6	P90-.72	3/Mo.	P90-.56	6/6 Mo.	P90-.72
L	Temperature Cycle	6	P90-.72	3/Mo.	P90-.56	6/6 Mo.	P90-.72
M	Fluid Resistance	36	P90-.94	36/12Mo	P90-.94	36/12Mo.	P90-.94
	Durability Tests						
III.							
I	Impulse	24	P90-.90	12/Mo.	P90-.84	3/3 Mo.	P90-.56
J	Humidity	6	P90-.72	3/Mo.	P90-.56	6/6 Mo.	P90-.72
H	Salt Spray	6	P90-.72	3/Mo.	P90-.56	6/6 Mo.	P90-.72

PRODUCTION VALIDATION FLOW CHART

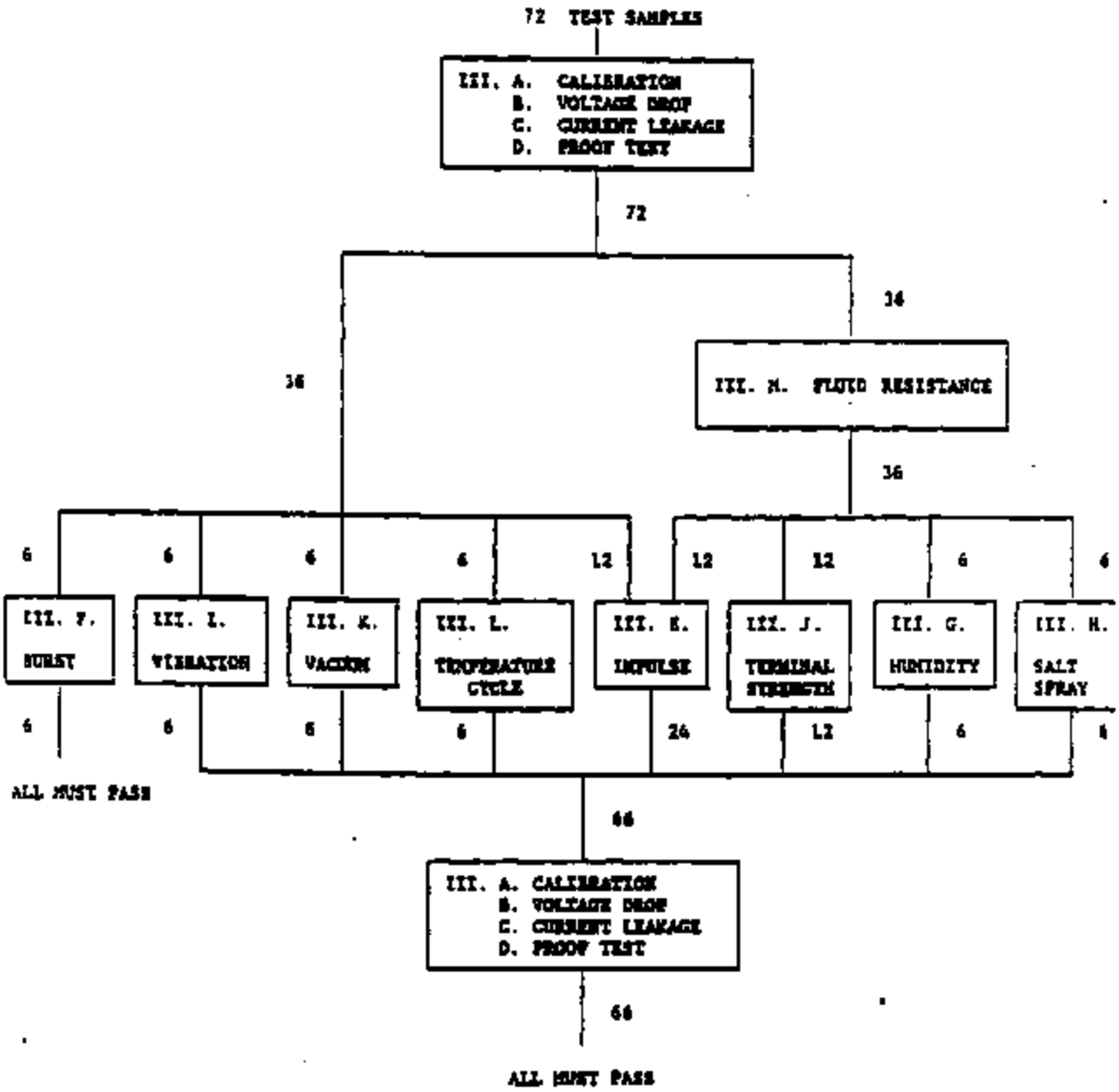

III. TEST PROCEDURES AND REQUIREMENTS

A. Calibration

1. Test Requirements

a. Switch calibration is to be checked at room temperature (16°C-35°C) using ambient air or equivalent.

b. Calibration settings shall be specified on the part drawing with the settings checked after 2 or more pressure cycles with ambient air, or equivalent. Pressure cycle range is to be determined by the manufacturer to insure switch calibration stability. The cut-in and differential set points are to be measured while conducting 750 ± 50 milliamperes while 13.0 ± 1.0 volts D.C. is applied. The cut-in point is to be checked with increasing pressure.

c. The cut-out point is to be checked with decreasing pressure, and the differencial set point is to be calculated using the cut-in pressure minus the cut-out pressure.

2. Acceptance Requirements

a. Nonconformance is defined as any switch point which falls outside the tolerance band specified on the part drawing.

B. Voltage Drop

1. Test Requirements

a. Voltage drop is to be measured after 2 or more cycles with ambient air or equivalent from 0 to 10,000 ± 172 KPa (1450 ± 25 PSI) while conducting 750 ± 50 milliamps and 13.0 ± 1.0 volts D.C. is applied to the switch. Under these conditions with the switch closed the voltage drop is to be measured. Millivolt connection interface at terminals to be less than 10 millivolts.

2. Acceptance Requirements

a. Nonconformance is defined as a voltage drop in excess of 200 millivolts.

III. TEST PROCEDURES AND REQUIREMENTS (cont'd)

C. Current Leakage

1. Test Requirements

a. Current leakage is to be checked with 500 volts, 60 Hz alternating current.

b. Current leakage is to be checked:

(1) Between the switch leads with the contacts open.
(2) Between the lead and the switch housing with contacts closed.
(3) Between either lead and switch housing with the contacts open.

2. Acceptance Requirements

a. Nonconformance is defined as any leakage current in excess of one hundred (100) microampere.

D. Proof Test

1. Test Requirements

a. Subject sample switches to Section A to establish their initial switching pressures.

b. Proof test is to be conducted using brake fluid or equivalent as the pressure medium. Test pressure shall be as specified on the part drawing. Test pressure shall be isolated from pressure source and held for not less than 30 seconds.

c. Recheck the switches to Section A.

2. Acceptance Requirements

a. No evidence of fluid leakage, seepage, or drop in test pressure greater than 430 KPa.(62 PSI) is permitted.

b. A change in cut-in and cut-out pressures greater than ± 5% from the initial value is not permitted.

c. The test samples must be destroyed after testing.

TI-NHTSA 004136

III. TEST PROCEDURES AND REQUIREMENTS (cont'd)

E. Impulse

1. Test Requirements

a. Test the switch for a total of 500,000 cycles. Cycle pressure between (low) 0-276 KPa (0-40 psi) and (high) 10,000 ± 345 KPa (1450 ± 50 psi).

1) 0 - 475,00 cycles: 13 ± 1 volts, trace current to monitor function.

2) 475,001 - 500,000 cycles: 13 ± 1 volts D.C., 750 ± 50 ma., per figure 4.

b. Brake fluid temperature to be 135 ± 14°C and ambient temperature to be 107°C min.

c. Cycle rate is to be 110-130 cycles per minute.

d. Switch must open and close each cycle.

2. Acceptance Requirements

a. After impulse test check to sections A, B, C, & D using the procedure established in each section.

b. Nonconformance is defined as any switch not meeting the criteria in sections A, B, C, & D.

c. Samples used for this test must be destroyed after all testing is completed.

F. Burst

1. Test Requirement

a. Burst strength is to be checked using brake fluid or equivalent as the pressure medium.

b. Pressurize the switch to 48.3 MPa (7000 PSI) minimum and hold for 30 seconds minimum.

2. Acceptance Requirements

a. Nonconformance is defined as any evidence of fluid leakage or seepage from the switch or threads. Samples used for this test must be destroyed after testing is completed.

G. Humidity

1. Test Requirements

a. Mount the switch in the test port in a humidity chamber. Currently released mating electrical connector must be installed before start of test.

b. Subject the switch to ten (10) continuous humidity cycles as follows:

(1) Raise temperature to 65 +10/-2 °C over 2.5 hours; at 90-98% relative humidity.

(2) Hold 3 hours at 65 +10/-2 °C at 90-98% relative humidity.

(3) Lower temperature to 25 +10/-2 °C over 2.5 hours; at 80-98% relative humidity.

2. Acceptance Requirements

a. Within 15 minutes after completion of the tenth humidity cycle check the switch to sections A, B, C, D, using the procedure established in each section.

b. Nonconformance is defined as any switch not meeting the criteria in sections A, B, C, or D.

H. Salt Spray

1. Test Requirements

a. Mount the switch in the test port in a salt spray chamber. The currently released mating electrical connector and wiring must be installed prior to start of test.

b. Expose the switch assembly to 72 hours of salt spray per ASTM B-117.

2. Acceptance Requirements

a. After exposure, check the switch to sections A, B, C, D, using the procedure established in each section.

b. Nonconformance is defined as any switch not meeting the criteria in sections A, B, C, or D. Samples used for this test must be destroyed after all testing is completed.

III. TEST PROCEDURES AND REQUIREMENTS (cont'd)

I. Vibration

1. Test Requirements

a. Mount the switch in the test port and attach the currently released mating electrical connector before start of test.

b. Switches are to be vibrated in all 3 planes with electrical continuity being monitored during the entire test. See Figure 1 for switch orientation in the 3 planes. Vibration tests are to be conducted at room temperature using brake fluid, ambient air, or equivalent as the pressure medium.

c. Internal pressure shall be maintained at 0 KPa G. when the switch is in the closed position and 1.1 times max actuation pressure shown on print when the switch is in the open position.

d. Vibrate the switch at 1.5 mm displacement (peak-to-peak) while varying the frequency uniformly from 5 to 50 to 5 Hz over a 5 minute period.

e. Vibrate the switch in alternate one-hour periods in the open and closed positions for a total of 8 hours in each plane. (Total test time is 24 hours).

2. Acceptance Requirements

a. After the entire vibration sequence check the switches to sections A, B, C, or D using the procedure established in each section.

b. Nonconformance is defined as any evidence of leakage or any change in electrical continuity/discontinuity during the vibration cycles, or any switch not meeting the criteria in sections A, B, C, or D. Samples used for this test must be destroyed after all testing is completed.

III. TEST PROCEDURES AND REQUIREMENTS (cont'd)

J. Terminal Strength

1. Test Requirements

a. Mount the switch in the test port.

(1) Apply a 89 ± 9 N axial force to each terminal.

(2) With a pendulum apply a 45 ± 5 N impact force to the switch housing at the connector and, perpendicular to the centerline axis of the switch. See Figure 2 for force application point and direction.

2. Acceptance Requirements

a. Check the switch to sections A, B, C, and D using the procedures established in each section.

b. Nonconformance is defined as any terminal or housing fracture, or any switch not meeting the criteria in sections A, B, C, or D.

K. Vacuum

1. Test Requirements

a. Mount the switch in the test port. Vacuum tests are to be conducted at room temperature using ambient air as the pressure medium.

b. Subject the switch to 5 cycles of vacuum from atmospheric pressure (760 mm Hg) to an absolute pressure of 3-6 mm Hg. Maintain the vacuum for a minimum of 60 seconds.

2. Acceptance Requirements

a. Check the switch to sections A, B, C, and D using the procedure established in each section.

b. Nonconformance is defined as any switch not meeting the criteria in sections A, B, C, and D.

3 mm Hg = 0.058 psi = 0.400 KPa

6 mm Hg = 0.116 psi = 0.800 KPa

III. TEST PROCEDURES AND REQUIREMENTS (cont'd)

L. Temperature Cycle

1. Test Requirements

a. Mount switches in test ports; test to be run using currently released brake fluid.

b. Repeat the following procedure 25 times.

(1) Lower the switch and fluid temperature to at least -40°C.

(2) Cycle the switches ten times at 10 seconds/cycles. One cycle consists of a pressure variation from 0 - 276 KPa.G (0-40 psi) to 10,000 ± 345 KPa.G (1450 ± 50 PSI). Note: Switch must open and close each cycle.

(3) Raise switch and fluid temperature to 38°C minimum.

(4) Repeat Step 2.

c. At completion of Step b, check switches per sections A, B, C, and D.

2. Acceptance Requirements

a. Nonconformance is defined as any evidence of switch fluid leakage, seepage, or not meeting the criteria of sections A, B, C, and D.

M. Fluid Resistance

1. Test Requirements

a. Mount the switch in the test port and orient as installed in the vehicle.

b. Install the currently released mating electrical connector (with wire leads) to the switch.

c. Sequentially, immerse the switch into each of the specified fluids, at a temperature of 23 ± 2 °C, for 5 ± 1 second. Remove the switch and drain and store the switch for the specified time at room temperature, prior to immersing into the next fluid.

III. TEST PROCEDURES AND REQUIREMENTS (cont'd)

Fluid	Drain Time	Storage Time
Reference Fuel C ASTM D471	60 ± 5 min.	none
10W40 Engine Oil	24 ± 1 hour	14 days
Ethylene Glycol/ Water 50/50 by Volume	24 ± 1 hour	24 ± 1 hour
Brake Fluid DOT 3	24 ± 1 hour	48 ± 1 hour
Automatic Transmission/ Power Steering Fluid (same) ESP-M2C138-CJ	24 ± 1 hour	14 days
Isopropyl Alcohol/ Water 50/50 by Volume	24 ± 1 hour	none
Reference Fuel C, ASTM D471 with Methyl Alcohol 85/15 by Volume	24 ± 1 hour	none

d. Per the Flow Chart, subject the prescribed number of immersed switches to the post immersion tests specified below:

III. E. Impulse
III. G. Humidity
III. H. Salt Spray
III. J. Terminal Strength

Acceptance Requirements

a. Switches must fully meet the requirements of the specified post immersion test.

b. Nonconformance is defined as any switch not meeting the criteria in sections A, B, C, or D. Samples used for this test must be destroyed after all testing is completed.

IV. STATISTICAL ANALYSIS METHODS

A. For PV, IP-1 and IP-2 tests, all samples tested must pass. Having all the required sample size pass will provide data to support the conclusion that the switch has a minimum reliability R, at a given confidence of C. The notation Pc-R is interpreted as minimum reliability equal to R, at a confidence C; thus P90-.80 means a minimum reliability of 80% at 90% confidence.

B. All samples must pass is the statistical test acceptance criteria stated for tests with 100% frequency; or samples from lots, which could have a variable size.

V. REVALIDATION REQUIREMENTS

A. No change in design, material, process or component supplier shall be made without prior approval from the releasing Product Engineering Office. As part of approving a change, the releasing Product Engineering Office will establish the portion of the Product Validation tests required to be run to revalidate the switch. The following table is to be used as a guide in determining the type of tests required for revalidation requirements.

RUNNING CHANGE REVALIDATION

Component	Process or Material Change or New Supplier
1. Terminals, Contacts, or Connector	III, B, C, E, G, H, I, J, L, M.
2. Case or Housing	All Tests
3. Disc or Diaphragm	III, A, D, E, F, I, K, L.
4. Fitting or Fluid Connection	III, D, E, F, H, I, M.

B. Annual revalidation is not required on carryover switches.

VI. LOT DEFINITION

A lot is defined as no more than eight (8) hours of production up to 4,000 pieces. If shifts extend beyond eight (8) hours, or more than 4,000 pieces are produced in a shift, the product must be separated into at least two lots.

VII. RECORD RETENTION

A. Recording and record retention shall conform with Ford Q-101.

B. Production Validation test results and analysis are to be forwarded to the releasing Product Engineering Office before approval for shipment of production parts can be granted.

C. In-Process test results shall be available at the supplier's manufacturing facility for the releasing Product Engineering Office and Ford SQA or its representatives to review on request.

VIII. INSTRUCTIONS AND NOTES

All switches are to be identified with the Ford part number, supplier identification, and a date code indicating final assembly.

All test equipment and test procedures for testing to this specification must be approved by the releasing Product Engineering Office and no change in equipment or procedure may be made without their written concurrence.

Test port configuration is shown in Figure 3.

O-rings, if used in the design, shall be free from cuts, nicks, abrasions or any other damage which would result in a fluid leak.

All switches must have a shipping cap installed over the port threads to prevent contamination. All shipping caps must be approved by the releasing Product Engineering Office prior to production incorporation.

All switches that do not pass the calibration test are to either be readjusted and rechecked, or scrapped. (Salvage of component parts permitted with 100% reinspection).

If product nonconformance occurs for test Sections III. B, C, D, E, F, and J, production shall be stopped and the problems corrected. All production lots shall be sorted 100% prior to shipment. Suspected nonconformance of any shipped parts shall be reported immediately to the releasing Product Engineering Office.

If nonconformance of the statistical acceptance criteria occurs for test Sections III. G, H, I, K, L and M, a cause to recall the subject weeks production and to stop production may result.

IX. COMPILATION OF REFERENCE DOCUMENTS

ASTM B-117. Salt Spray Testing

Ford Q-101, Quality System Standard - 1992 Edition

ES-F0EB-14A464-AA, Specification - SLV Assy - Wire Connector

ES-F2VF-9C735-AA, Specification - Servo Assembly Speed Control

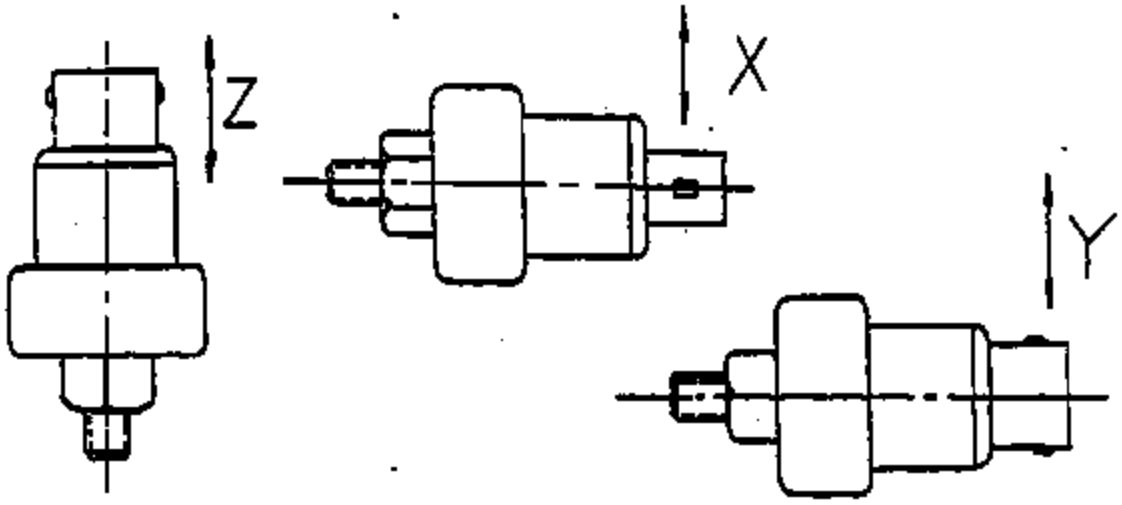

VIBRATION TEST - SWITCH ORIENTATION

FIGURE 1.

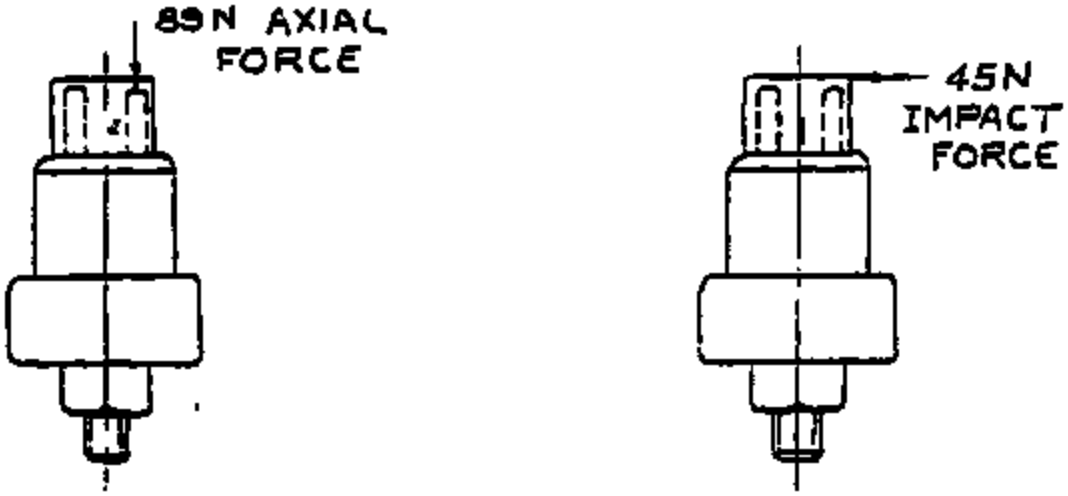

TERMINAL STRENGTH - LOAD ORIENTATION

FIGURE 2.

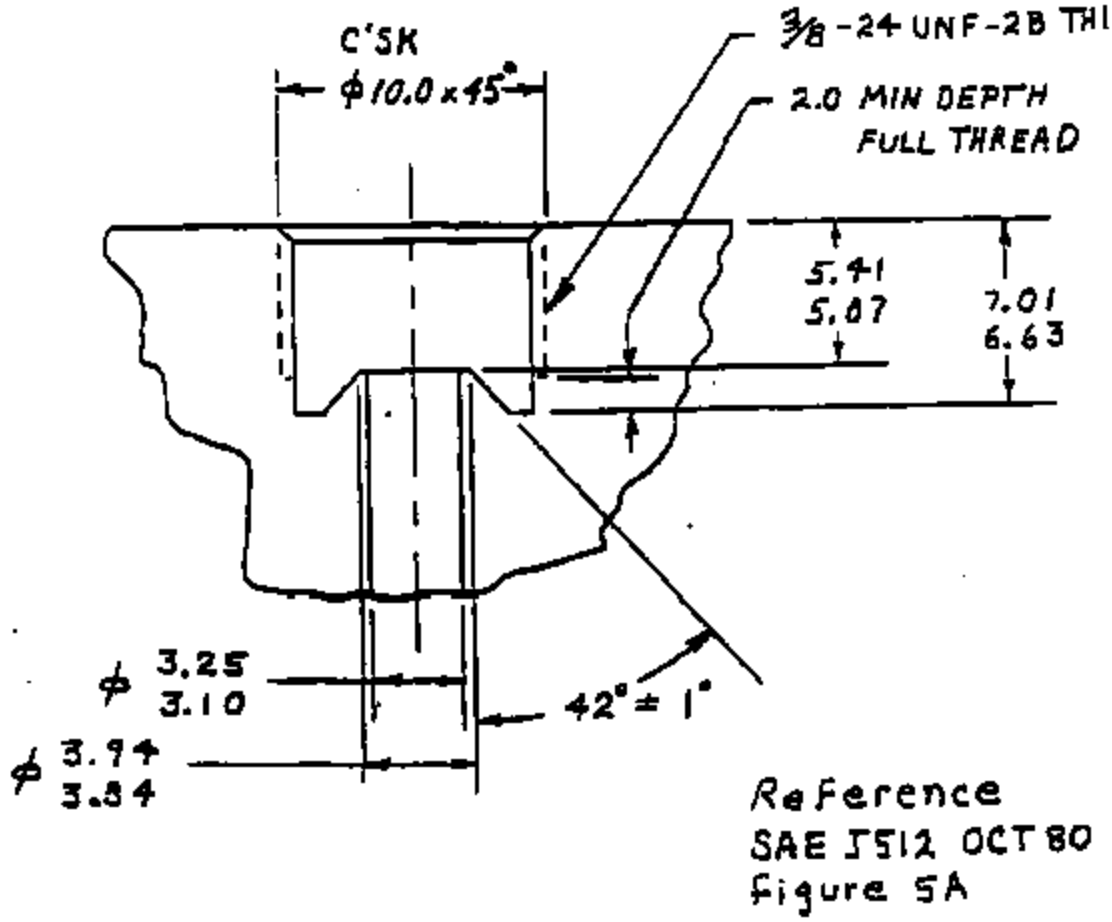

TEST FIXTURE PORT CONFIGURATION

FIGURE 3

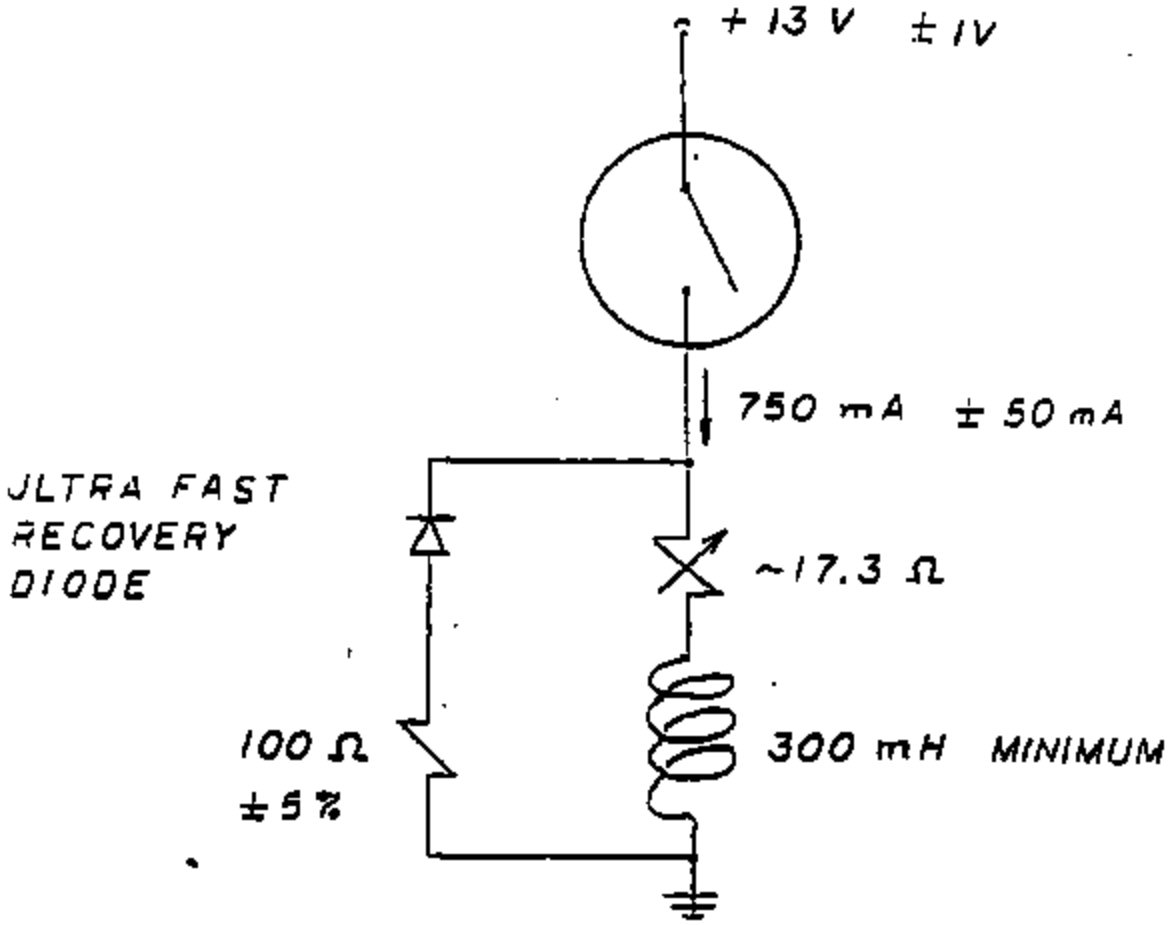

DEACTIVATE SWITCH
TEST SET UP

FIGURE 4

Appendix. 4.2.1
Initial and Final Characterization

PRESSURE SWITCH DATA Form 21605 TEST NO. 151-15-104

DEVICE	DATE REQUESTED	REQUESTED BY	REQUESTED COMP. DATE
77PSL2-1			

PERFORMED BY	DATE STARTED	DATE COMPLETED	APPROVED BY
Jeffrey Di Genova	6/24/91		

PROJECT TITLE: Ford MY'92 Electronic Speed Control Deactivate PS

CUSTOMER: Pass-Cav

PURPOSE OF TEST:

Refer to Ford E.S

PROCEDURE:

Current leakage

Device #	Act/Rel	mV Pkg	~57				Proof	Tests
10-15-81	127/46	4.9	1.88 mA	1.43 mA	1.57 mA		Good	Fluid res & Impulse
01	127/51	4.7	2.16	1.49	1.50			Fluid res & Impulse
02	127/54	4.8	1.73	1.33	1.62			Fluid res & Impulse
04	127/52	4.9	1.67	1.32	1.73			Fluid res & Impulse
05	127/57	5.1	1.71	1.39	1.48			Fluid res & Impulse
07	126/53	5.2	1.78	1.33	1.59			Fluid res & Impulse
07	124/47	7.2	2.28	1.61	1.60			Fluid res & Impulse
08	126/51	5.6	2.00	1.49	1.57			Fluid res & Impulse
09	125/52	3.0	1.98	1.48	1.57			Fluid res & Impulse
11	118/41	5.5	1.99	1.53	1.71			Fluid res & Impulse
12	122/54	3.9	1.30	1.33	1.55			Fluid res & Impulse
13	120/39	4.9	1.95	1.42	1.71			Fluid res & Impulse
13	120/52	4.8	1.62	1.29	1.66			Fluid res & Term. Stress
14	127/55	4.0	1.76	1.37	1.35			Fluid res & Term. Stress
15	127/46	4.5	1.33	1.48	1.47			Fluid res & Term. Stress
16	123/51	4.4	1.37	1.32	1.70			Fluid res & Term. Stress
17	120/43	3.7	1.58	1.38	1.34			Fluid res & Term. Stress
18	123/52	3.0	1.96	1.43	1.55			Fluid res & Term. Stress
19	122/56	3.7	1.37	1.44	1.33			Fluid res & Term. Stress
20	122/50	5.0	1.76	1.35	1.70			Fluid res & Term. Stress
21	122/53	5.2	1.78	1.37	1.79			Fluid res & Term. Stress
22	125/53	4.3	1.34	1.49	1.54			Fluid res & Term. Stress
23	126/57	3.3	1.39	1.36	1.62			Fluid res & Term. Stress
25	124/52	4.3	1.83	1.39	1.63			Fluid res & Term. Stress
26	125/48	4.1	1.67	1.27	1.64			Fluid res & Humidity
26	124/53	5.3	1.78	1.29	1.71		Good	Fluid res & Humidity
27	127/46	4.2	1.60	1.25	1.63			Fluid res & Humidity
28	121/45	4.9	1.64	1.23	1.72			Fluid res & Humidity

Current leakage

Device #	Act/Rel	cV Prof	Leak Voltage to Device	Leak Voltage to Inverter	Leak Voltage to Inverter	Proof	Tests		
18-19-20	123/47	7.2	1.66 mA	1.29 mA	1.44 mA	Good	Fluid res	Humidity	
20	129/50	4.8	1.66	1.25	1.46		Fluid res	Humidity	
31	125/36	4.7	1.65	1.24	1.61		Fluid res	Salt	Spray
32	129/47	3.3	1.62	1.23	1.66		Fluid res	Salt	Spray
33	121/59	3.2	1.74	1.34	1.70		Fluid res	Salt	Spray
34	145/65	3.2	1.70	1.30	1.67		Fluid res	Salt	Spray
35	121/51	3.4	1.67	1.27	1.77		Fluid res	Salt	Spray
36	123/44	3.8	1.73	1.33	1.81		Fluid res	Salt	Spray
37	125/52	3.3	1.90	1.45	1.57		Burst		
38	119/44	3.5	1.92	1.72	1.59		Burst		
39	124/60	3.5	1.66	1.31	1.58		Burst		
40	128/53	4.7	1.75	1.37	1.56		Burst		
41	130/52	3.3	1.69	1.23	1.51		Burst		
42	116/45	3.5	1.67	1.24	1.66		Burst		
43	121/40	3.8	1.68	1.23	1.69		Vibration		
44	127/47	5.7	1.60	1.20	1.65		Vibration		
45	117/43	3.6	1.54	1.23	1.65		Vibration		
46	129/49	3.4	1.59	1.21	1.69		Vibration		
47	135/62	6.5	1.55	1.24	1.62		Vibration		
48	122/45	4.1	1.69	1.32	1.49		Vibration		
49	138/65	3.5	1.61	1.21	1.43		Vacuum		
50	117/45	7.3	1.58	1.22	1.47		Vacuum		
51	Not used								
52	117/43	14.5	1.64	1.27	1.64	Good	Vacuum		
53	130/43	5.8	1.61	1.25	1.55		Vacuum		
54	122/50	5.0	1.63	1.29	1.63		Vacuum		
55	123/42	8.7	1.62	1.29	1.69		Vacuum		
56	127/47	5.7	1.63	1.28	1.72		Temp.	Cycle	
57	129/52	6.1	1.70	1.28	1.56		Temp.	Cycle	
58	121/45	5.2	1.69	1.31	1.55		Temp.	Cycle	
59	129/48	5.4	1.72	1.28	1.49		Temp.	Cycle	
60	129/50	6.4	1.72	1.28	1.46		Temp.	Cycle	
61	142/61	5.1	1.76	1.23	1.46		Temp.	Cycle	
62	133/56	8.2	1.78	1.24	1.42		Impulse		Stopped @ 155
63	124/39	4.8	1.66	1.24	1.44		Impulse		Leak @ 35.0 K
64	125/51	5.2	1.69	1.25	1.41		Impulse		Stopped @ 155
65	132/55	7.3	1.68	1.25	1.44		Impulse		Leak @ 155
66	129/52	4.7	1.72	1.23	1.45		Impulse		Stopped @ 155
67	115/51	6.0	1.76	1.31	1.46		Impulse		Stopped @ 300
68	116/41	6.8	1.73	1.30	1.49		Impulse		Leak @ 325 K
69	124/43	10.0	1.78	1.34	1.45		Impulse		Leak @ 269 K
70	130/46	7.3	1.74	1.23	1.49		Impulse		Leak @ [illegible]
71	123/45	6.7	1.78	1.26	1.43		Impulse		Leak @ [illegible]
72	139/56	6.1	1.71	1.23	1.43		Impulse		Leak @ 296 K
73	139/59	3.7	1.69	1.27	1.47		Impulse		Leak @ [illegible]
74	126/43	4.6	1.71	1.27	1.46				
75	128/59	6.3	1.73	1.28	1.50				
76	130/53	7.1	1.71	1.29	1.48				
77	130/52	7.2	1.75	1.30	1.47				
78	139/62	6.6	1.73	1.30	1.47				
79	124/42	5.4	1.76	1.23	1.48				
80	122/55	5.1	1.75	1.31	1.43				

790 K

Rebuild of Impulse parts/Post Cycle

Device #	Proof	Act/Rel	Mv/Dep	Current leakage					
156-15-91	OK	105/53	51	1.91	1.53	1.80			
-92		111/58	181	1.90	1.60	1.77			
-93		113/54	101	2.05	1.64	1.78			
-94		108/55	47	2.14	1.66	1.76			
-95		110/60	91	1.96	1.56	1.69			
-96		108/64	56	1.88	1.56	1.80			
-97		112/56	47	1.89	1.59	1.81			
-98		110/53	114	1.91	1.56	1.80			
-99		110/54	53	1.87	1.57	1.83			
-100		108/55	42	1.93	1.58	1.74			
-101		112/57	40	2.27	1.69	1.77			
-102		111/60	42	2.03	1.58	1.66			
-103		111/58	76	2.01	1.60	1.66			
-104		115/56	45	2.18	1.60	1.65			
-105		118/55	42	1.92	1.67	1.89			
-106		115/57	125	1.86	1.60	1.79			
-107		118/59	117	2.20	1.68	1.78			
-108		112/60	104	1.75	1.52	1.73			
-109		114/58	128	1.96	1.60	1.75			
-110		108/57	86	1.93	1.60	1.80			
-111		115/56	108	1.78	1.47	1.73			
-112		117/58	92	2.05	1.61	1.76			
-113		113/53	48	2.06	1.63	1.76			
-114		112/52	132	2.17	1.65	1.83			

Final Check

	Tests	Proof	Act/Rel	Mv/Dep	Current leakage		
156-15-01	Fluid Res & Impulse		Overload				
-02	Fluid Res & Impulse						
-03	Fluid Res & Impulse						
-04	Fluid Res & Impulse						
-05	Fluid Res & Impulse						
-06	Fluid Res & Impulse						
-07	Fluid Res & Impulse						
-08	Fluid Res & Impulse						
-09	Fluid Res & Impulse						
-10	Fluid Res & Impulse						
-11	Fluid Res & Impulse						
-12	Fluid Res & Impulse						
-13	Fluid Res & Tee Strength	OK	128/61	44	2.07	1.42	1.61
-14	Fluid Res & Tee Strength		135/62	41	1.62	1.32	1.57
-15	Fluid Res & Tee Strength		129/53	05	1.71	1.36	1.55
-16	Fluid Res & Tee Strength		131/58	44	1.83	1.48	1.55
-17	Fluid Res & Tee Strength		125/49	49	1.62	1.34	1.54
-18	Fluid Res & Tee Strength		132/61	45	1.81	1.56	1.55
-19	Fluid Res & Tee Strength		133/60	46	1.90	1.43	1.54
-20	Fluid Res & Tee Strength		135/58	49	1.70	1.38	1.52
-21	Fluid Res & Tee Strength		137/59	43	1.81	1.44	1.53
-22	Fluid Res & Tee Strength		131/62	45	1.84	1.47	1.60
-23	Fluid Res & Tee Strength		135/64	48	1.87	1.56	1.60
-24	Fluid Res & Tee Strength		135/63	44	1.90	1.40	1.62
-25	Fluid Res & Humidity		140/56	41	1.88	1.54	1.70
-26	Fluid Res & Humidity		133/62	5.0	2.02	1.58	1.71
-27	Fluid Res & Humidity		131/53	5.8	2.04	1.65	1.71
-28	Fluid Res & Humidity		135/51	10.1	2.06	1.51	1.82
-29	Fluid Res & Humidity		133/66	8.9	1.97	1.58	1.73
-30	Fluid Res & Humidity		136/60	7.5	1.99	1.77	1.89

Device #	Test		Proof	Act/Rel	Mu Prof	Current cc-Uniform	Current 1 cc-Uniform	Kurt cc-Uniform
15-15-31	Fluid Res	Salt Spray	OK	124/41	41	1.68	1.97	1.65
-32	Fluid Res	Salt Spray		127/52	40	1.88	1.61	1.85
-33	Fluid Res	Salt Spray		125/59	47	1.71	1.43	1.64
-34	Fluid Res	Salt Spray		140/70	41	5.31	7.40	7.68
-35	Fluid Res	Salt Spray		124/57	41	1.68	1.40	1.66
-36	Fluid Res	Salt Spray		123/53	42	1.68	1.40	1.65
-37	Burst		7600 PSI					
-38	Burst		7600					
-39	Burst		7600					
-40	Burst		7600					
-41	Burst		7600					
-42	Burst		7600					
-43	Vibration		OK	121/48	43	2.18	1.75	1.84
-44	Vibration			123/51	41	1.94	1.58	1.83
-45	Vibration			121/50	43	1.89	1.56	1.72
-46	Vibration			123/53	45	1.97	1.61	1.77
-47	Vibration			137/65	43	1.92	1.58	1.71
-48	Vibration			124/50	41	1.92	1.54	1.80
-49	Vacuum		OK	124/47	3.3	1.97	1.60	1.63
-50	Vacuum		OK	123/49	4.1	1.91	1.60	1.99
-51	NOT USED							
-52	Vacuum		OK	124/47	17.0	1.95	1.49	1.59
-53	Vacuum		OK	128/48	9.2	1.57	1.31	1.96
-54	Vacuum		OK	123/55	6.5	1.93	1.54	2.13
-55	Vacuum		OK	123/77	5.8	1.67	1.91	2.01
-56	Temp Cycle		OK	123/53	5.6	1.47	1.27	1.75
-57	Temp. Cycle		OK	126/60	1.7	1.56	1.34	1.79
-58	Temp. Cycle		OK	118/51	5.0	1.69	1.43	1.71
-59	Temp. Cycle		OK	114/58	7.5	1.67	1.32	1.72
-60	Temp. Cycle		OK	115/57	6.6	1.70	1.43	1.71
-61	Temp. Cycle		OK	129/66	5.6	1.57	1.37	1.82
-62	Impulse	Aborted						
-63	Impulse							
-64	Impulse							
-65	Impulse							
-66	Impulse							
-67	Impulse							
-68	Impulse							
-69	Impulse							
-70	Impulse							
-71	Impulse							
-72	Impulse							
-73	Impulse							
-74								
-75								
-76								
-77								
-78								
-79								
-80								

NOT USED

Appendix 4.2.2
Burst data and Weibull

ESTIMATE AND TWO SIDED 90 % CONFIDENCE
INTERVALS FOR DISTRIBUTION PARAMETERS
****

SHAPE(BETA) PARAMETER	:	63.738
LOWER LIMIT	:	31.505 — LOW EXTREME @ 90%
UPPER LIMIT	:	%128.9330291748047
SCALE(THETA) PARAMETER	:	7768.737
LOWER LIMIT	:	7680.740 — LOW EXTREME @ 90%
UPPER LIMIT	:	7857.741

MESSAGE
~~TIME~~ VALUES FOR SPECIFIED LEVELS OF RELIABILITY — USING LOW VALUES
****
* WEIBULL SLOPE :31.50 FOR β AND θ
* CHARACTERISTIC LIFE : 7680.74 FROM ABOVE

NO.	RELIABILITY(%)	~~[illegible]~~ MESSAGE
1	72	7414.0854

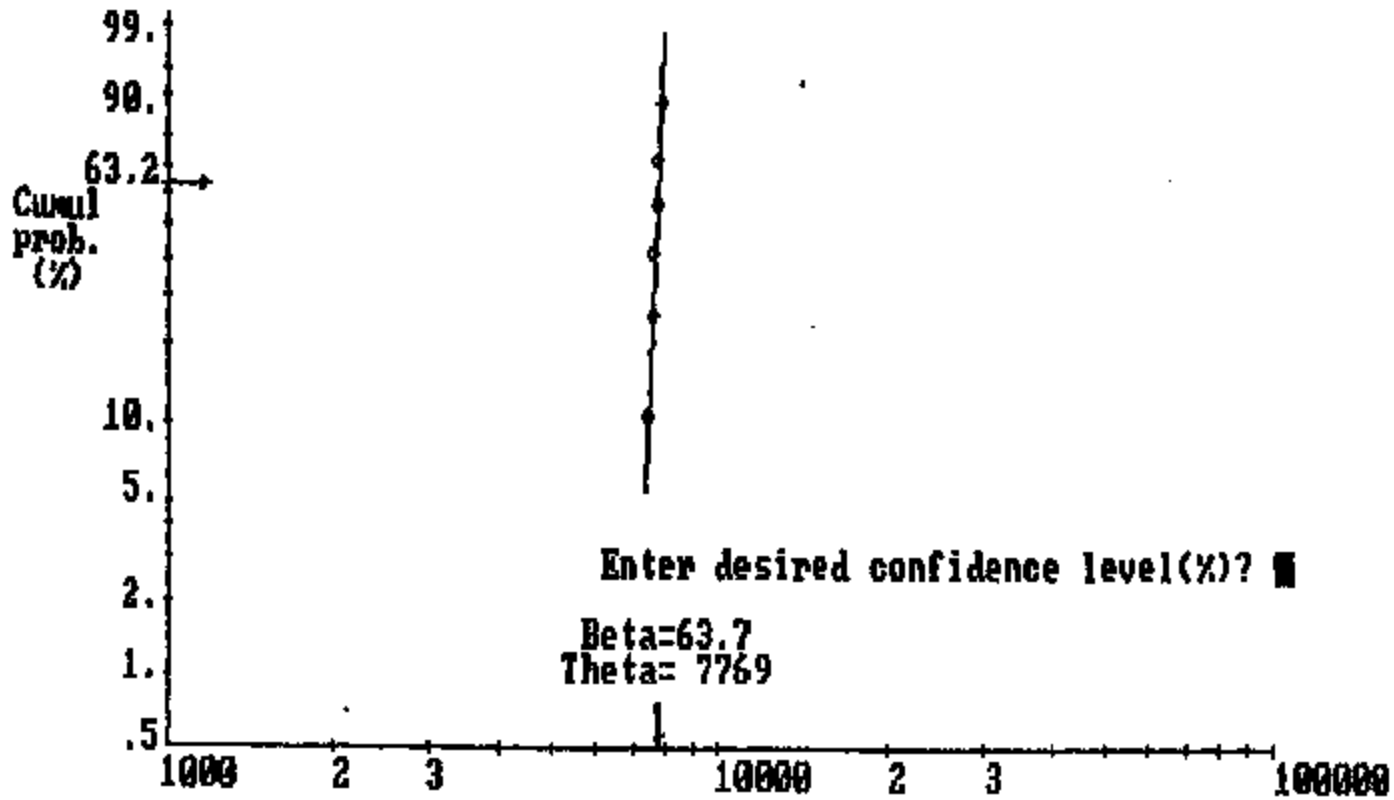
99.
90.
63.2
Cumul prob. (%)
10.
5.
2.
1.
.5
1000
2
3
10000
2
3
100000
Enter desired confidence level(%)?
Beta=63.7
Theta= 7769

Appendix 4.2.3
Vibration

ENVIRONMENTAL TEST LAB REQUEST FORM

(ONE TEST PER REQUEST)

DATE 8/5/91

REQUIRED COMPLETION DATE ~~9/9/91~~ 9/9/91

DEVICE ~~[illegible]~~, 77F542-3

CHARGE DEPT. NO. 127 I.O. NO. 101060

REFERENCE SPEC. NO. ES-F2VC-9F927-AA

SOURCE OF TEST SAMPLES Design Lab

QUANTITY OF TEST SAMPLES ~~[illegible]~~ 12

REQUESTED BY Jeffrey D. Demaio

EXTENSION 3144 M/S 12-27

REPORT NO. 0887-081

TESTED BY Lab

COMPLETION DATE 9-9-91

TEST REQUIREMENTS: (TO BE FILLED IN BY REQUESTOR)

See attached, Vibration.

TEST PERFORMED: per attached specification.

TEST RESULTS:

See attached sheets.

EQUIPMENT USED: CALIBRATION DATE: NEXT DUE DATE:

EVT 0887-001 RUN 1 8-29-91 Y AXIS G-OK O-REJ LF
POST TEST SWEEP # 102 DOWN

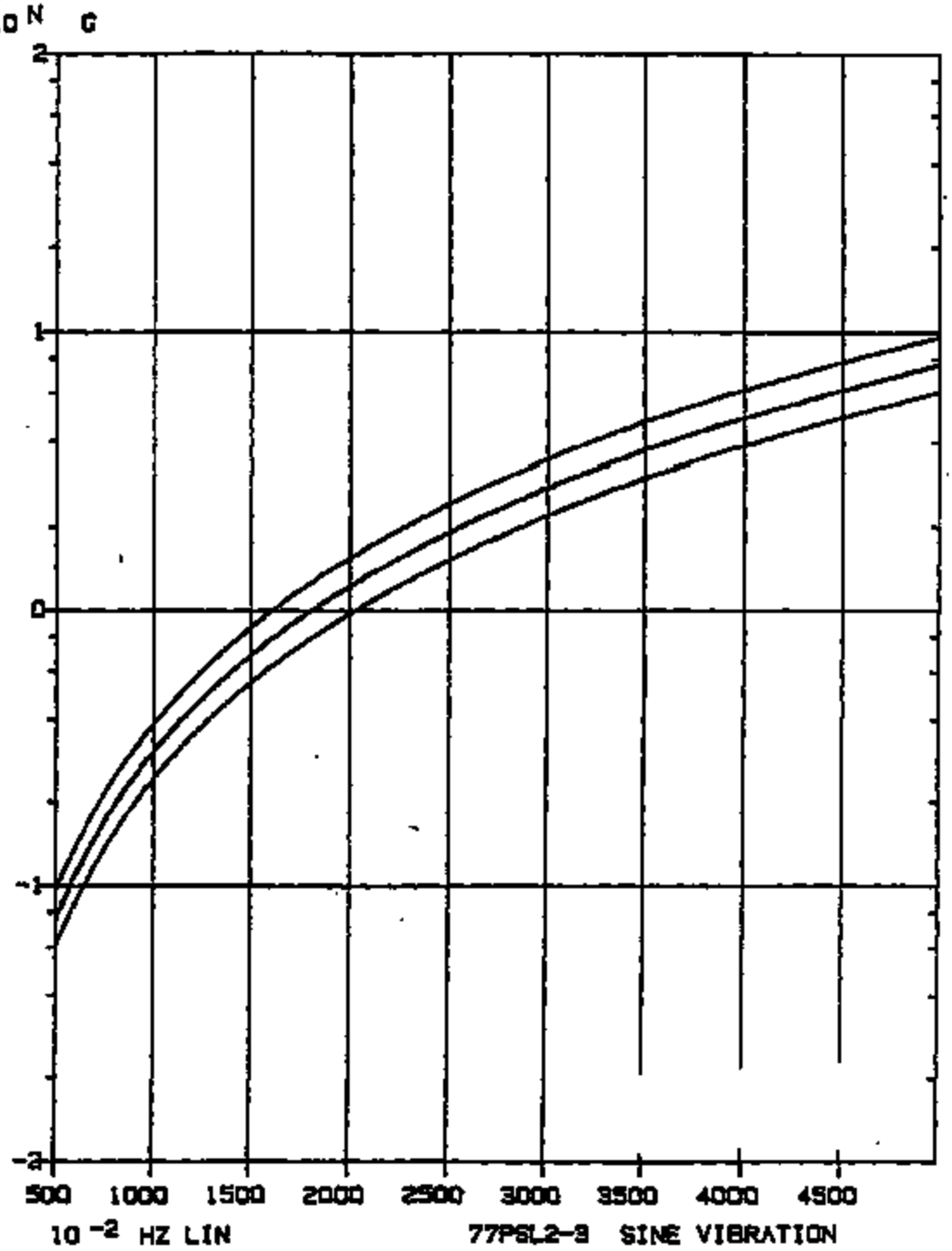

EVT 0887-081 RUN 2 6-30-91 Z AXIS 8=OK O=REJ LF
POST TEST SWEEP # 192 DOWN

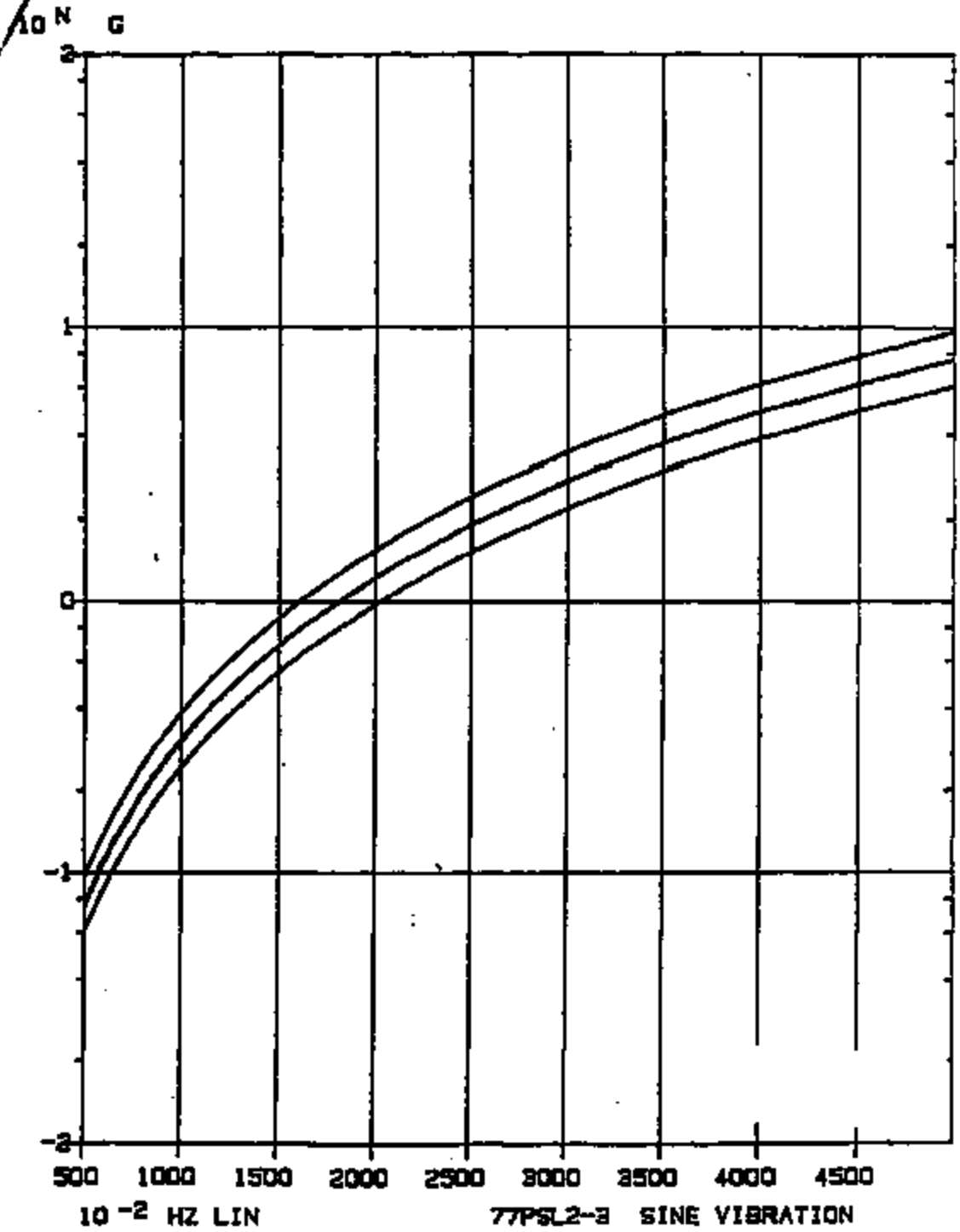

EVT 0887-081 RUN 3 9-3-91 X AXIS S-OK D-REJ LF

POST TEST SWEEP # 192 DOWN

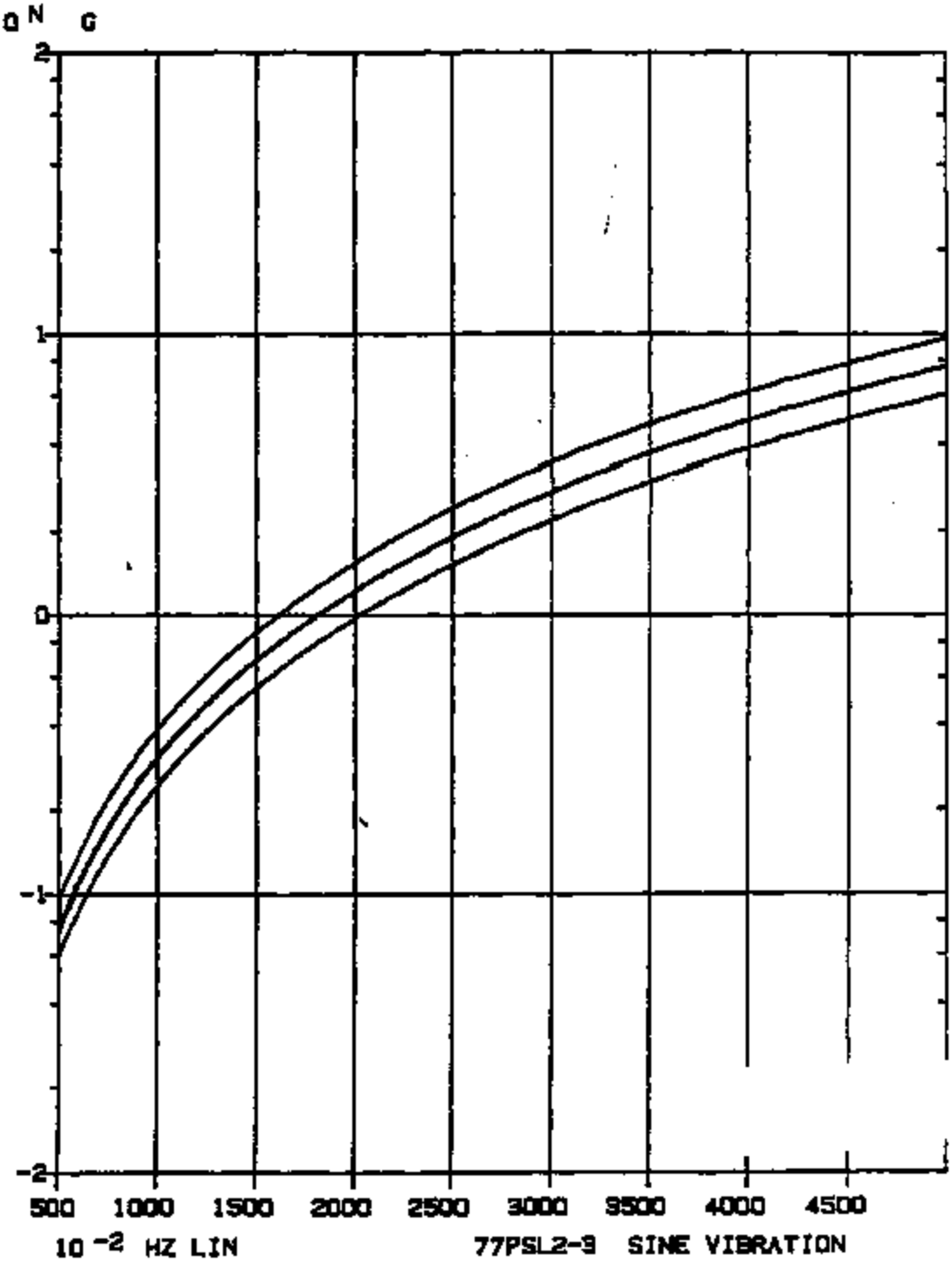

Appendix 4.2.4
Thermal Cycle Day/Time/Temp

77 PS Validation Testing

Temp. Cycle Test

(LOW SETPT -42°C)

	1 Fluid Temp	2 Ambient Temp	3 Time	4 Date	5	6 Fluid Temp	7 Ambient Temp	8 Time	9 Date	10	11	12	13
Cycle 1	+40	+43	11:45	8/7/91		-43	-45	11:35	8/7/91				
2	43	43	1:05	"		-40	-46	2:10	"				
3	42	42	3:45	"		-42	-44	4:10	"				
4	40	40	7:35	"		-43	-44	9:15P	"				
5	41	40	7:35A	8/8/91		-41	-47	8:45	8/8/91				
6	39	41	9:20	"		-41	-44	10:35	"				
7	42	43	11:45	"		-42	-44	12:50	"				
8	41	42	1:50	"		-42	-44	3:00P	"				
9	40	43	3:30	"		-40	-45	4:40P	"				
10	42	43	5:05P	"		-42	-44	6:30P	"				
11	42	43	7:35P	"		-43	-44	9:35P	"				
12	40	43	7:50A	8/9/91		-41	-44	9:05	8/9/91				
13	42	42	9:30A	"		-40	-44	10:40	"				
14	42	43	11:15A	"		-42	-44	12:40	"				
15	42	42	1:10P	"		-40	-44	2:25	"				
16	41	43	2:45	"		-40	-44	4:00	"				
17	40	43	4:35	"		-40	-44	5:35	"				
18	41	42	11:40A	8/10/91		-43	-44	2:35P	8/10/91				
19	41	42	3:00P	"		-42	-44	4:35	"				
20	40	42	5:20P	"		-42	-44	7:15P	"				
21	43	42	8:40A	8/11/91		-43	-44	4:50P	8/11/91				
22	43	42	5:15	"		-41	-44	6:45	"				
23	40	42	7:50	8/12/91		-40	-44	9:05	8/12/91				
24	40	43	9:50	"		-40	-45	11:05	"				
25	40	43	11:50	"		-40	-44	1:05	"				
26													
27													
28													
29													
30													
31													

Appendix 4.2.5
Fluid Resistance Test

TEST LOT NO.	TEST	DEVICE
TESTED BY		
APPROVED BY	TEXAS INSTRUMENTS — MATERIALS & CONTROLS GROUP, ATTLEBORO, MA 02703	DOC.
DATE 91-09-20		PAGE 54

FORM 5795

FORM NO. 18858 1/90

TEST NO. 107831

TECHNICAL SERVICE LABS

8/27/91

TEST NO. 107831

COST CENTER	[redacted]	[redacted]	[redacted] 2625
LOT NO.	[redacted]	[redacted]	[redacted]
REQUESTOR	[redacted]	[redacted]	[redacted]
MAIL STATION	17-37	[redacted]	[redacted]
EXTENSION	3199	[redacted]	[redacted]
DATE REQUIRED	9/5/91	[redacted]	[redacted]
NO. OF SAMPLES	72	[redacted]	[redacted]
COMPOSITION	[illegible]	[redacted]	[redacted]

REPORT OF RESULTS:

complete

DATE RECEIVED 8/28/91 DATE OUT 9-5

EMPLOYEE NO.									
JOB NO.									
NO. ANALYZED									
HOURS WORKED									

Appendix 4.2.6
Humidity

Form 6610

ENVIRONMENTAL TEST LAB REQUEST FORM

(ONE TEST PER REQUEST)

DATE 9/6/91

REQUIRED COMPLETION DATE 9/11/91

DEVICE 77PSLB-1; 77PSL2-3

CHARGE DEPT. NO. 127 I.O. NO. 101060

REFERENCE SPEC. NO. ES-F2VC-9F924-AA

SOURCE OF TEST SAMPLES Design Lab

QUANTITY OF TEST SAMPLES 4

REQUESTED BY Jeffrey DiBenedico

EXTENSION 2194 MS 1127

9/6/

REPORT NO. 0933-091

TESTED BY LAB

COMPLETION DATE 9-20-91

TEST REQUIREMENTS: (TO BE FILLED IN BY REQUESTOR)

Please run humidity test per attached.

TEST PERFORMED:

START 9-16-91 16:00 CHAMBER MALFUNCTION (SHUT DOWN)

RESTART 9-18-91 0830 HOURS

STOP 9-20-91 1630 HOURS

TEST RESULTS:

EQUIPMENT USED: CALIBRATION DATE: NEXT DUE DATE:

Appendix 4.2.7
Salt Spray

TEST LOT NO.	TEST	DEVICE
TESTED BY		
APPROVED BY	TEXAS INSTRUMENTS — MATERIALS & CONTROLS GROUP, ATTLEBORO, MA 02703	DOC.
DATE 91-05-30		PAGE 11

FORM 6281

Form 5515

ENVIRONMENTAL TEST LAB REQUEST FORM
(ONE TEST PER REQUEST)

DATE 8/6/91

REQUIRED COMPLETION DATE 7/16/91

DEVICE 77PSL2-1 ; 77PSL2-3

CHARGE DEPT. NO. 116 I.O. NO. 101060

REFERENCE SPEC. NO. E5-FJVC-9F924-AA

SOURCE OF TEST SAMPLES Dearborn Lab

QUANTITY OF TEST SAMPLES 12

REQUESTED BY Jeffrey D. Domaico

EXTENSION 3143 (MB) 11-29

REPORT NO. 0934-091

TESTED BY Lab

COMPLETION DATE 9-9-91

TEST REQUIREMENTS: (TO BE FILLED IN BY REQUESTOR)

Please run salt spray Test per attached.

TEST PERFORMED:

IN: 1430 9-6-91
Out: 1430 9-9-91

TEST RESULTS:

to be determined by requestor.

EQUIPMENT USED: CALIBRATION DATE: NEXT DUE DATE:

Appendix 4.2.8
Light Truck F3TA-9F924-AA Data

PRESSURE SWITCH DATA Form 21605 TEST NO. 1:7-15-100

DEVICE	DATE REQUESTED	REQUESTED BY	REQUESTED COM DATE
77/5L2-3			

PERFORMED BY	DATE STARTED	DATE COMPLETED	APPROVED BY
Jeffrey D. Genovico	6/24/91		

PROJECT TITLE: Ford MY'92 Electronic Speed Control Dual State PS

CUSTOMER: LT

PURPOSE OF TEST:

Later to Ford ES

PROCEDURE:

Current Leakage

Device	Actuat	mV Drop	Closing to Open	Opening to Closed	Closed per Open	Proof	Tests
[illegible]	261/194	4.5	1.65 mA	1.22 mA	1.64 mA	Good	Fluid Res & Electric
02	262/192	4.9	1.60	1.31	1.41		Fluid Res & Temperature
03	260/191	4.2	1.60	1.23	1.49		Fluid Res & Temperature
04	263/193	4.6	1.65	1.25	1.47		Fluid Res & Temperature
05	264/187	4.3	1.63	1.21	1.43		Fluid Res & Temperature
06	264/191	4.0	1.60	1.23	1.46		Fluid Res & Temperature
07	262/193	4.0	1.57	1.20	1.47		Fluid Res & Temperature
08	263/185	4.2	1.76	1.29	1.40		Fluid Res & Temperature
09	264/176	4.1	1.54	1.43	1.58		Fluid Res & Temperature
10	262/179	4.7	1.52	1.37	1.50		Fluid Res & Temperature
	259/180	4.5	1.75	1.26	1.40		Fluid Res & Temperature
12	246/175	3.6	1.76	1.27	1.42		Fluid Res & Temperature
13	Not Tested						
14	260/191	4.8	1.55	1.39	1.53	Good	Fluid Res & Temperature
15	259/191	4.1	2.00	1.52	1.64		Fluid Res & Temperature
16	259/191	4.8	1.90	1.45	1.65		Fluid Res & Temperature
17	245/175	5.3	1.73	1.31	1.50		Fluid Res & Temperature
18	263/200	4.7	1.61	1.31	1.57		Fluid Res & Temperature
19	259/187	5.5	1.76	1.29	1.46		Fluid Res & Temperature
20	247/183	5.2	1.83	1.30	1.48		Fluid Res & Temperature
21	262/196	4.1	1.73	1.29	1.43		Fluid Res & Temperature
22	260/193	4.2	1.93	1.38	1.55		Fluid Res & Temperature
23	262/193	3.4	1.91	1.35	1.50		Fluid Res & Temperature
24	252/193	4.2	1.62	1.37	1.77		Fluid Res & Temperature
25	259/189	4.2	1.65	1.37	1.60		Fluid Res & Temperature
26	261/190	4.4	1.99	1.42	1.66	Good	Fluid Res & Humidity
27	258/192	4.6	1.91	1.42	1.57		Fluid Res & Humidity
28	270/195	4.2	1.49	1.39	1.63		Fluid Res & Humidity

Current leakage

Device #	Act/Rel	ΔV Drop	[illegible] to [illegible]	[illegible] to [illegible]	[illegible]	Proof	Tests
15	261/193	5.6	1.42 ±A	1.36 ±A	1.54 ±A	Good	Fluid Res & Humidity
16	261/196	4.5	1.36	1.34	1.58		Fluid Res & Humidity
17	241/179	6.8	1.39	1.32	1.51		Fluid Res & Humidity
18	267/199	6.2	1.36	1.36	1.64		Fluid Res & Salt Spray
19	248/171	4.5	1.25	1.29	1.61		Fluid Res & Salt Spray
20	267/193	6.2	1.29	1.31	1.54		Fluid Res & Salt Spray
21	259/195	5.2	1.35	1.39	1.62		Fluid Res & Salt Spray
	Not used						
27	266/199	6.6	1.39	1.32	1.73	Good	Fluid Res & Salt Spray
28	140/111	7.7					
29	262/189	2.9	1.29	1.27	1.65	Good	Fluid Res & Salt Spray
30	254/194	4.8	1.35	1.52	1.61		Burst
31	259/185	5.6	1.36	1.32	1.65		Burst
32	261/199	4.9	1.29	1.35	1.60		Burst
33	Not used						
34	253/175	4.9	1.39	1.38	1.66	Good	Burst
35	261/185	4.4	1.29	1.27	1.69		Burst
36	261/192	5.0	1.35	1.33	1.67		Burst
37	262/197	6.1	1.38	1.32	1.62		Vibration
38	264/194	2.5	1.37	1.38	1.53		Vibration
39	267/181	3.5	1.37	1.35	1.62		Vibration
40	253/170	11.0	1.40	1.38	1.78		Vibration
	Not used						
41	268/196	1.1	1.25	1.39	1.51	Good	Vibration
42	264/191	5.1	1.33	1.31	1.52	Good	Vibration
	Not used						
	257/198	5.1	1.39	1.33	1.50	Good	Vacuum
44	260/179	5.5	1.37	1.33	1.49		Vacuum
45	248/192	5.4	1.38	1.36	1.49		Vacuum
46	261/191	7.9	1.40	1.35	1.49		Vacuum
47	265/196	5.0	1.34	1.36	1.44		Vacuum
48	268/192	9.5	1.32	1.29	1.53		Vacuum
49	252/194	3.1	1.32	1.39	1.49		Temp Cycle
50	268/196	6.0	1.32	1.36	1.49		Temp Cycle
51	262/195	4.7	1.35	1.38	1.50		Temp Cycle
52	258/190	5.5	1.33	1.41	1.52		Temp Cycle
53	265/189	9.0	1.39	1.37	1.51		Temp Cycle
54	262/193	8.3	1.31	1.35	1.45		Temp Cycle
55	264/197	3.7	1.30	1.35	1.48		Impulse
	Not used						
56	255/179	5.0	1.32	1.36	1.45	Good	Impulse
57	248/186	4.6	1.30	1.32	1.45		Impulse
58	258/197	4.0	1.37	1.41	1.50		Impulse
59	262/189	9.0	1.33	1.37	1.46		Impulse
60	254/192	5.6	1.31	1.36	1.45		Impulse
61	261/194	4.3	1.36	1.41	1.51		Impulse
	Not used						
62	261/186	7.4	1.34	1.41	1.51	Good	Impulse
63	267/199	5.1	1.36	1.34	1.47		Impulse
64	262/192	3.4	1.28	1.35	1.48		Impulse
65	266/199	5.1	1.29	1.34	1.49		Impulse
66	272/199	4.0	1.28	1.33	1.46		Impulse

TI-NHTSA 004172

Final Characterizations

Date =	TESTS	Proof	Act/Rel	Hz Disp	[illegible]	[illegible]
157-45-01	Fluid Res & Tensile	OK	337/190	2.5	1.92	1.47
02	Fluid Res & Tensile	OK	251/192	4.3	1.61	1.37
03	Fluid Res & Tensile	OK	281/193	74.3	1.64	1.39
04	Fluid Res & Tensile	OK	241/192	97.2	1.53	1.39
05	Fluid Res & Tensile	OK	282/191	2.5	1.72	1.41
06	Fluid Res & Tensile	OK	241/190	6.3	1.78	1.44
07	Fluid Res & Tensile	OK	251/185	2.5	1.72	1.38
08	Fluid Res & Tensile	OK	287/179	2.3	1.46	1.38
09	Fluid Res & Tensile	OK	292/180	2.4	1.59	1.35
10	Fluid Res & Tensile	OK	248/183	3.2	1.52	1.32
11	Fluid Res & Tensile	OK	224/191	3.2	1.49	1.31
12	Fluid Res & Tensile	OK	232/179	3.3	1.49	1.32
13	Not Used					
14	Fluid Res & Tensile Strength	OK	250/180	41	1.86	1.47
15	Fluid Res & Tensile Strength		255/196	41	1.68	1.43
16	Fluid Res & Tensile Strength		256/190	42	1.65	1.41
17	Fluid Res & Tensile Strength		246/186	42	1.65	1.41
18	Fluid Res & Tensile Strength		265/202	40	1.74	1.43
19	Fluid Res & Tensile Strength		238/192	[illegible]	1.66	1.39
20	Fluid Res & Tensile Strength		245/190	40	1.76	1.37
21	Fluid Res & Tensile Strength		260/186	[illegible]	1.60	1.38
22	Fluid Res & Tensile Strength		268/195	41	1.69	1.39
23	Fluid Res & Tensile Strength		262/198	41	1.75	1.40
24	Fluid Res & Tensile Strength		[illegible]	40	1.72	1.35
25	Fluid Res & Tensile Strength	OK	247/188	[illegible]	1.54	1.31
26	Fluid Res & Hardness	OK	267/190	4.3	2.12	1.70
27	Fluid Res & Hardness		261/190	4.8	2.10	1.70
28	Fluid Res & Hardness		273/200	4.1	2.00	1.61
29	Fluid Res & Hardness		270/193	4.7	1.82	1.45
30	Fluid Res & Hardness		274/192	5.4	2.00	1.65
31	Fluid Res & Hardness		269/197	5.1	2.00	1.65
32	Fluid Res & Salt Spray		262/194	40	306.00	4.39
33	Fluid Res & Salt Spray		254/183	40	2.10	1.52
34	Fluid Res & Salt Spray		260/193	40	310.00	44.00
35	Fluid Res & Salt Spray		274/205	40	310.00	307.00
36	NOT USED					
37	Fluid Res & Salt Spray	OK	259/193	40	39.6	32.4
38	NOT USED					
39	Fluid Res & Salt Spray	OK	257/192	40	307.00	306
40	Accel		Flange			
41	Accel		8200			
42	Accel		9400			
43	NOT USED					
44	Accel		9600			
45	Accel		5400			
46	Accel		5100			
47	Vibration	OK	250/193	12.6	1.55	1.20
48	Vibration	OK	262/189	4.0	1.64	1.40
49	Vibration	OK	245/187	3.7	1.47	1.22
50	Vibration	OK	252/191	4.5	1.37	1.15
51	NOT USED					
52	Vibration	OK	252/189	6.5	1.35	1.14
53	Vibration	OK	262/186	[illegible]	1.37	1.17
54	NOT USED					
55	Vibration	OK	262/193	6.4	1.57	1.31
56	Vibration	OK	251/189	5.2	1.62	1.49
57	Vibration	OK	253/186	6.3	1.59	1.46

Date	TESTS			Proof	Actual	% Prop	[illegible]	[illegible]	[illegible]
12-15-53	Vacuum			OK	248/199	8.9	1.69	1.46	1
54	Vacuum			OK	243/191	8.5	1.66	1.44	1.5
60	Vacuum			OK	250/170	7.9	1.71	1.47	1.2
61	Temp. Cycle			OK	248/182	5.3	1.55	1.34	1.
62	Temp. Cycle			OK	254/174	5.2	1.57	1.33	1.
63	Temp. Cycle			OK	253/187	5.4	1.59	1.37	1.
64	Temp. Cycle			OK	245/178	6.8	1.66	1.39	1.
65	Temp. Cycle			OK	255/185	4.8	1.64	1.42	1.
66	Temp. Cycle			OK	246/182	12.3	1.58	1.34	
67	Tensile			Acc	254/181	1.9	1.74	1.39	1
68	Not used								
69	Tensile			Acc	235/179	3.1	1.40	1.46	1
70	Tensile			Acc	250/181	2.0	1.66	1.49	1
71	Tensile			Acc	242/184	1.9	1.77	1.69	1.
72	Tensile			Acc	250/185	2.0	2.05	1.67	2
73	Tensile			Acc	242/186	1.9	2.11	1.72	1.
74	Tensile			Acc	237/181	1.7	2.10	1.71	2
75	Not used								
76	Tensile			Acc	254/184	1.9	1.99	1.49	1
77	Tensile			Acc	242/189	19.1	1.72	1.36	1
78	Tensile			Acc	248/191	5.3	1.74	1.54	1.
79	Tensile			Acc	251/184	1.9	1.58	1.57	1
80	Tensile			Acc	255/214	1.9	592-A	76.9	2

TI-NHTSA 004174