MSG MN= 164533 FR=VAOS TO=6801 SENT=01/14/91 03:35 PM
RN=067 ST=C DIV=0050 CC=00134 BY=VAOS AT=01/14/91 03:35 PM

TO ED KADISEVSKIS MDES
JOHN KOURTESIS MDES

CC: DAVE CIARN ZARN
STAN HOMOL SH2
ED KADISEVSKIS MDES
SCOTT MARTIN MFPC
STEVE DEFILER 6801
BILL SWEET PCME
ANDRE CHARPENTIER MDES
DICK GARIEPY MFPC

FR: MATT SELLERS PCME

SJ: CCPS PRESSURE TESTER DISCUSSION MEETING MINUTES
==========

BELOW IS A LIST OF COMMENTS/ACTIONS FROM OUR MEETING TODAY CONCERNING THE NEW 77PS PRESSURE TESTER. SOME OF THESE ITEMS WILL THROWN ON THE TABLE FOR FURTHER DISCUSSION AT OUR NEXT SCHEDULED CCPS MECHANIZATION MEETING.

PLEASE REVIEW EACH ITEM AND PREPARE FOR DISCUSSION.

CO IRNS
==========

MILLIVOLT TESTING

IS A MILLIVOLT DROP TEST BEING INCORPORATED IN THE NEW TESTER. IS IT A DUPLICATION OF THE CURRENT 52PS/57PS PRESSURE TESTER CAPABILITY? DESIGN HAS INDICATED THAT A 500ma/200mv/7v TEST IS DESIRED/REQUIRED. IS THIS A POSSIBLE TEST SCENARIO IN THE 77PS TESTER?

CREEP DETECTION

IS THE CREEP DETECTION THRESHOLD ADJUSTABLE LIKE THE 52PS/57PS TESTER.

OVER-PRESSURE PRE-CYCLES

SPECIFIED @ 900PSI MINIMUM, TWO CYCLES REQUIRED. ARE WE LIMITED TO 300 PSI OR CAN WE CHANGE AT WILL UP TO THE SYSTEM PRESSURE. ALSO, IS THE 1000 PSI MAX ON THE SYSTEM AN ARBITRARY CALL OUT BASED ON SYSTEM DUPLICATIONS. CAN THIS BE ADJUSTED TO 1100, 1500 ???

HANDLING DAMAGE

IS THERE A RAMPED EJECTION SYSTEM IN PLACE TO MINIMIZE SUBSEQUENT HA LING DAMAGE TO THREADS, BASE ETC.

J512 SEAL @ LEAK TEST

CONCERNS WERE DISCUSSED OVER THE ABILITY OF THE SYSTEM TO PERFORM AN ACCURATE LEAK TEST GIVEN THE REDUCTION OF SEALING SURFACE AREA ON THE J512 HEXPORT END. IS THE SURFACE AREA TOO SMALL?

PASS CAR OFFSET KEYS - ETC

ARE THERE ACCOMMODATIONS TO ALLOW FOR THE OFFSET KEY ON THE PASS CAR BASE WITHOUT INTERFERENCE IN THE NEST. ALSO, ARE THERE PLANS TO INSTALL A KEY LOCATION SENSING PROBE TO POKE YOKE THE TEST.

ACTUATION/RELEASE SPECIFICATIONS

KEITH ROBERTS 5/29/90 SPEC. MEMO STATED 100PSI AS THE MINIMUM ACTUATION, AND 25PSI AS THE MINIMUM RELEASE. THE TRUE REQUIREMENTS ARE AS FOLLOWS:

ACTUATION: 90 PSI MINIMUM - 350 PSI MAXIMUM
RELEASE: 20 PSI MINIMUM - 250 PSI MAXIMUM

IS THIS A CONCERN?

LOW LEVEL LEAK TEST

ARE WE INCLUDING A TEST STATION ON THE OFF LOAD CONVEYOR, OR JUST LEAVING ROOM FOR FUTURE ADDITION.

SYSTEM OUTPUT CAPABILITIES

ARE THERE PLANS TO IMPROVE VISUAL ASPECTS OF THE OUTPUT BEYOND THE CURRENT CAPABILITIES. SUCH THINS AS HISTOGRAMS, PARETOS, ETC.

LEAK RATE SPECIFICATION

CURRENT SPEC IS 8 PSI/SEC @ 500 PSI OR MAX ACTUATION PLUS 10%. DOES THIS MEAN THAT WE CAN TEST FOR PRESSURE DECAY BELOW 500 PSI, OR IS 500 PSI THE MINIMUM TEST PRESSURE. IF IT IS BELOW 500 PSI, CAN WE ADJUST THE PSI/SEC DECAY SPECIFICATION AT WILL.

RAMP RATES

WE HAD TO SHUT OFF THE FAST UP VALVE ON THE 57PS PRESSURE TESTER TO ALLOW TESTING OF 125 AND 250 PSI ACTUATION DEVICES. THE FAST UP VALVE TENDED TO SHOOT THE APPLIED PRESSURE PAST THE ACTUATION TEST RANGE BEFORE THE SYSTEM COULD REACT. THEREFORE VOIDING THE TEST. ARE WE CONSIDERING THIS PROBLEM WITH THE NEW DESIGN.

HEXPORT VARIATIONS

PLANS ARE TO POSSIBLY INCLUDE A METRIC HEXPORT IN THE 77PS LINE OF PRODUCTS. THE MAJOR DIAMETER OF THIS THREAD IS ABOUT .017" LARGER THAN THE J512 HEXPORT. WILL THIS CREATE A CONCERN OVER INTERFERENCE.

CATEGORIZATION OF BAD DEVICES

CURRENT PRIORITY IS AS FOLLOWS: B-LEAK, C-CONTINUITY FAIL, D-CREEP ACTUATION, E/F-ACTUATION HIGH OR LOW, G/H-RELEASE HIGH OR LOW, K-DIFFERENTIAL, L-RELEASE CREEP.

ARE THESE PRIORITIES REARRANGED EASY, AND CAN WE CHANGE THE CRITERIA FOR EACH FAILURE MODE.

I WOULD LIKE TO REVIEW THIS MEMO AT THE NEXT CCPS MECHANIZATION MEETING. HOWEVER IF YOU FEEL THAT A SEPERATE MEETING IS APPROPRIATE PLEASE CALL.

TI-NHTSA 001656

REGARDS...MATT

SAMPLE ORDER

ORDER NO: 2091-4

REQUEST DATE: 01/15/91

CREDIT ACCOUNT: 5902

COST CENTER: 131

PRODUCT CODE: 060

CUSTOMER: SURFACES

CUSTOMER P.O. NO: 26218

TI PART NO: 57P5L5-3

CUSTOMER PART NO: F6VC-9F924-AA

QUANTITY: 6

PRICE: $20.00 EACH

DELIVERY PROMISED: 01/21/91

SPECIAL INSTRUCTIONS: USE OFFSET POLARITY TAB

BILL TO:
SURFACES
(ADDRESS ON FILE)

SHIP TO:
SURFACES
(ADDRESS ON FILE)

PRODUCTION SAMPLES

XX ENGINEERING DEVELOPMENT SAMPLES

CC: ENGINEERING: STEVE OFFILER

PRODUCTION CONTROL: MARIE CROSSLAND

SALES ENGINEER: JOE SCHUCK

PRESSURE SWITCH DATA Form 21605 TEST NO. 113-01-07

DEVICE	DATE REQUESTED	REQUESTED BY	REQUESTED COMPL DATE
97 PSL 2-1	1-18-91	Steve A.	
PERFORMED BY	**DATE STARTED**	**DATE COMPLETED**	**APPROVED BY**
Jeff A.	1-31-91	2/1/91	

PROJECT TITLE: Speed control deactivate Switch

CUSTOMER:

PURPOSE OF TEST: First 77 PS Sampling

PROCEDURE:

Device #	Act/Rel								
113-01-07		Now functional							
2									
3	149/99	→ slip							
4	151/[illegible]								
5	No.								
6	146/92								
7	140/76	→ slip							

(OVER)

TI-NHTSA 001658

SAMPLE ORDER

ORDER NO: CD91-5

REQUEST DATE: 01/18/91

CREDIT ACCOUNT: 5902

COST CENTER: 101

PRODUCT CODE: 060

CUSTOMER: BENDIX

CUSTOMER P.O. NO: E179104

TI PART NO: 77PSL2-1

CUSTOMER PART NO: N/A

QUANTITY: 5

PRICE: $30.00 EACH

DELIVERY PROMISED: 2 - 1/31/91 (NON-FUNCTIONAL SAMPLES) shipped 1-31-91
3 - 2/21/91 (FUNCTIONAL SAMPLES)

SPECIAL INSTRUCTIONS:

BILL TO:
BENDIX AUTOMOTIVE SYSTEMS - NA
ATT'N: ACCOUNTS PAYABLE
P.O. BOX 4001
SOUTH BEND, IN 46634

SHIP TO:
BNA-ENGINEERING
PLANT 9
CORNER KENWOOD & BENDIX DRIVE
SOUTH BEND, IN 46628
ATT'N: ED SCHULTZ

PRODUCTION SAMPLES

XX ENGINEERING DEVELOPMENT SAMPLES

CC: ENGINEERING: STEVE OFFILER

PRODUCTION CONTROL: MARIE CROSSLAND

SALES ENGINEER: JOE SCHUCK

HIGHLIGHTS
Stephen B. Offiler
Week Ending 01/18/91

FORD MY'92 ELECTRONIC SPEED CONTROL DEACTIVATE PS

HEXPORT: No news from Stan Bragdon of SAE yet. I will recontact him mid-next week if I do not hear from him sooner.

We are looking into the chamfer gaging method using spherical shapes as opposed to cylindrical. I have completed calculations of the geometries involved to determined the best ball sizes to be using and the resolution they will provide. The larger-size ball (9/32") yields a total travel of 3.3 mils when applied to the standard J512 4 mil seat tolerance, while the smaller-size ball (7/32") yields travel of 5.5 mils. We are prototyping this idea using ball bearings and a dial indicator. We plan to meet with TDR this morning to discuss the implementation of this concept, and after digesting this meeting we plan to recontact Elco as well. The spherical idea was conceived by Elco, and furthermore it is ultimately their responsibility to control/measure their product. We find ourselves involved because the final gaging technique must meet Ford's approval; that is, if we do not *directly* measure the chamfer and angle, then we must demonstrate to Ford via our control plan that the technique we use to *infer* those measurements is appropriate.

The tolerance relaxation experiment is complete. A report is planned ASAP, to be forwarded to interested Ford parties and to Stan Bragdon to support the paper analysis. No evidence of leakage whatsoever from any of the seat matrix. Sectioning/disassembly is complete as well. The runout (included purposely) leaves obvious evidence; inspection shows the deformation of the brass seat to be obviously off-center. If both mating parts were similar grades of steel and runout was present, then it is reasonable to assume that significantly higher installation torques would be required to deform the compressor to the extent required to form a seal. Breakage of the hexport could become a factor in this instance; however we know of no such practices (steel on steel) in automotive brake fitting practice. All mating fittings pertinent to this program are aluminum or brass.

77PS PROTOTYPES: The model shop has delivered both terminals and spring arms, quantity 200. We have plenty of bases. Matt Sellers and Dave Peripoli are working on riveting and staking fixtures to allow build of completed switches. We expect to start building early next week. Parts will be built for calibrator evaluations, spring arm life testing, movable contact selection, and customer samples. Exact plan TBD soon.

SAMPLES, TESTING, MISC: We have received a request for five 77PS samples from Bendix. They conveyed an immediate need, but Charlie was able to ascertain that the need is for physical samples, with functional samples needed later. We will ship two non-functionals ASAP (clearly labelling them as such) with the balance of these functional devices to be shipped after life testing builds confidence in the design. Also, George Randall has a need for seventy-five 77PS devices in February.

We have missed the ship date for the Ford of Australia parts. The holdup is due to material and a collet required for the CNC lathe in B20 to produce metric hexports.

We are working with Print Control to put together parts lists for this program. We plan to begin with the Pass Car (57PSLS-3) parts list, holding off on the Truck (57PSLS-2) parts list until a hexport decision comes from Ford.

ML M#= 390960 FR=SB01 TO=ZARN SENT=01/22/91 [illegible] PM
R#=199 ST=C DIV=0050 CC=00101 BY=SB01 AT=01/22/91 [illegible] PM

O: Tom Charbonneau TC Charlie Douglas [illegible]
Dave Czarn ZARM Joe Schuch WHLI
Mike DeMattia [illegible] Matt Wallace [illegible]

S: Steve Oliver [illegible]

J: SAE J512 Update
Ref: MSG #50397 or 946801
==========

have been in contact again with Stan Bragdon. He has read and understood our report of the J512 tolerance stackup problem and the related widening of tolerances, and duplicated our results with his own CAD layout. He has informed me that he is in complete agreement with our analysis.

The plot thickens, however. Before he can stand behind the recommended changes and put forth a ballot, he must first complete a similar analysis of all of the rest of the tabulated nominal tubing sizes. (My analysis was only concerned with the size we are using, 3/16". J512 lists eight sizes from 3/16" to 3/4".) Since his time is donated to SAE by his company, Parker-Hannifin, he cannot give this matter high priority, so it'll take some time to complete the analysis for the other seven sizes.

He has yet another concern. He told me that the J512 inverted flare seal system is designed to have a deformable member present (typically double-flared copper tubing, of course). He believes that some type of deformable member is needed for the plug too. He pointed out a copper "flare gasket" (Fig 38 of J513 Refrigeration Fittings) is normally used on J513 flares. He feels the lack of a gasket is an oversight in J512, and will be spending time looking into this.

I responded with a brief description of the tolerance relaxation experiment and the fact that we've observed no leakage problem to date. Using dissimilar metals, the stronger one will deform the weaker one in absence of a deformable gasket. I plan to copy Stan the final report of the experiment when it is completed.

Finally, I checked with Stan to make sure he had no objections to being contacted by George Randall to further discuss this issue from George's perspective. TI should initiate this conversation, and I participate on a conference call if possible. Hopefully we can convince George with Stan's help.

Regards,
Dave O.

-MBG M#= 1905 FR=PCQA TO=PCQA SENT=01/25/91 07:17 AM
R#=079 ST=C DIV=0050 CC=00149 BY=CZRN AT=01/24/91 04:30 PM

JANUARY 24, 1991

TO:	BRIAN COUGHLIN	PEC	CC:	TOM CHARBONEAU	TC
	MIKE DeMATTIA	PCQA		JOHN KOURTESIS	MOES
	CHARLIE DOUGLAS	CPPC		STEVE MAJOR	WHLZ
	DICK GARIEPY	MFPC		ANDY McGUIRK	PCQA
	PAUL KOTCH	PRK1		ED O'NEILL	EJON
	JOE LAZARZ	JMLO		JOE SCHUCK	WHLZ
	STEVE OFFILER	SB01		GARY SNYDER	CPPC
	MATT SELLERS	PCME		MARTHA SULLIVAN	CPPC
	BILL SWEET	PCME		RAY TOURANGEAU	PCME
	GEORGE LAVOIE	B512		TED BALLARD	AVME
	JOHN HAYNES	PCQA		DAVE VARNEY	FORM
				SCOTT MARTIN	MFPC
				CLAIRE BALTHAZAR	MFPC
				JOHN WILSON	JJW5
FR:	DAVE CZARN	ZARN			

SJ: FORD CRUISE CONTROL PRESSURE SWITCH START-UP MEETING:
01/24/91 MEETING MINUTES

MEETING
=======
THE NEXT MEETING IS SCHEDULED FOR

DATE: 01/31 (THURSDAY)
TIME: 10:00-11:30 AM
PLACE: MARKETING CONFERENCE ROOM

* = NEW OR REVISED ITEMS

57 L/T	WHO	WHEN	
Hexport:			
* TOL. RELAXATION TEST REPORT	OFFILER	01/24	ORIG.
		01/24	COMP.
* J512 GAGE SKETCH TO PAUL KOTCH	OFFILER	01/23	DELETED
* J512 GAGE PRINT TO ELCO	SELLERS/ KOTCH	02/07	
* RELEASE GAGE FOR BUILD	SELLERS	02/07	
* TEST J512 GAGE CONCEPT	OFFILER	01/31	ORIG.
		01/24	COMP.
* SHOULD ELCO OR TI BUILD GAGE ?	CZAPN	01/24	ORIG.
		01/24	COMP.
* F/U WITH AFCC RE: ELCO BLANKS	CZAPN	01/24	ORIG.
		01/24	COMP.
. ELCO CONTROL PLAN	KOTCH	01/17	ORIG.
(DELAYED DUE TO J512 GAGING DEFINITION)		02/28	REV.
* RELEASE PRODUCTION HEXPORT (L/T)	SELLERS	02/08	
. ISIR corrective actions:			
. A. COINED BLADE TIP OVERSIZED			
- M.C. STUDY FROM AJ KNOTT	KOTCH	01/04	ORIG.
		01/31	REV.
. DISC LIFE TEST FROM EACH LOT	OFFILER/ GARIEPY	02/14	
. L/T PILOT RUN	SELLERS/ GARIEPY	01/24	ORIG.
		02/28	REV.
. CREATE L/T EIS PARTS LIST	OFFILER/	01/24	ORIG.
AND B.O.M. (ORIG. DATE WAS INCORRECT)	WILSON	03/07	REV.

57 P/C			
* OFFSET POLARITY KEY BASE PRINT	OFFILER	11/16	ORIG.
		01/24	REV.
P/C PILOT RUN	SELLERS/	01/31	ORIG.
	GARIEPY	02/28	REV.
* CREATE P/C EIS PARTS LIST	OFFILER/	01/24	ORIG.
AND B.O.M.	WILSON	01/31	REV.
* DISCUSS TERMINAL LEAD-IN ANGLE	SELLERS/	01/31	ORIG.
WITH AJ KNOTT	LAVOIE	01/24	COMP.
* RELEASE P/C HEXPORT (P/N 36900)	SELLERS/ KOTCH	01/31	
* ESTABLISH LEADTIME FOR HEXPORT	KOTCH	01/31	

7PS		
DESIGN UPDATE	OFFILER	ONGOING
MFG/MECH UPDATE	SELLERS	ONGOING
REPORT ON TOKICO P.S. RESPONSIBILITY	DOUGLAS	ONGOING
DESIGN FMEA -START	OFFILER	02/12
-COMPLETE		04/15

		01/24	COMP.
* PROVIDE START/FINISH DATE FOR FMEA	OFFILER	01/17	ORIG.
		01/24	REV.
		01/24	COMP.
* BEGIN CALIBRATOR EVALUATION	SELLERS	02/04	
* TEST PLAN FOR PROD. INTENT SWITCHES	OFFILER	01/19	ORIG.
		01/24	REV.
		01/24	COMP.
* CRITICAL PATH DESIGN ITEMS TO TRACK AT S/U MTGS.	OFFILER/ CZARN	01/10	ORIG.
		01/24	REV.
		01/24	COMP.
* "BLANKET PROTOTYPE ORDER" PACKAGE	TEAM	12/20	ORIG.
		01/24	REV.
		01/24	COMP.
* PROD. LINE LAYOUT	SELLERS	03/14	
* PROD. LINE SET-UP (RTE CARDS, ETC)	BALTHAZAR	TBD	
* RESOLVE BASE DELIV. SCHED. W/AFCO	SELLERS	02/07	
* ORDER ADD'L M.S. TERM'S AND SPRINGS	OFFILER	02/07	
* PROVIDE DATES FOR COMP. OF 1ST PASS SPRING/CONTACT/PIN WINDOW TESTING	OFFILER	02/07	
IQP'S:			
* ALUMINUM CRIMP RING	SELLERS	01/31	
* REBUMP CUP	SELLERS	02/21	
* MOVABLE TERM.	SELLERS	02/21	
* STATIONARY TERM.	SELLERS	03/15	
* BASE	SELLERS	02/28	
PRODUCTION COMPONENTS:			
* ALUMINUM CRIMP RING	LAVOIE	02/11	
* REBUMP CUP	LAVOIE	02/27	
* MOVABLE TERM.	LAVOIE	03/01	
* STATIONARY TERM.	LAVOIE	03/22	
* BASE	SELLERS	03/06	
* HEXPORT	FOTCH	03/22	
MANUFACTURING EQUIPMENT:			
* FINAL ASM MACHINE BUILD COMPLETION	SELLERS/ KOURTESIS	04/15	
* PRESSURE TESTER BUILD COMPLETION	SELLERS/ KOURTESIS	05/01	
* BASE ASM MACHINE BUILD COMPLETION	SELLERS/ KOURTESIS	05/31	
FORD AUSTRALIA			
. FORD AUSTRALIA UPDATE	DOUGLAS	ONGOING	
* SAMPLES FOR VP BUILD	OFFILER	01/17	ORIG.
		02/08	REV.

DISCUSSION
==========

57 L/T

.

WE MET WITH TDR TO REVIEW A J512 GAGE CONCEPT, USING THE BALL-BEARING MEASUREMENT TECHNIQUE. STEVE HAS EXPERIMENTED WITH THE TECHNIQUE AND IT SHOWS PROMISE. TDR HAS QUOTED $3200 PER GAGE FOR 2 GAGES; DELIVERY IN 3 WEEKS. WE WILL PROPOSE TO ELCO THAT THEY PURCHASE ONE GAGE FROM US.

.

ELCO INFORMED US ON 01/23 THAT THE 24 HEXPORTS DUE ON 01/25 WILL BE DELAYED BY A "MINIMUM OF 3 WEEKS". THEIR SUPPORT OF THE PROGRAM CONTINUES TO BE IN QUESTION; HOWEVER, A 3 WEEK DELAY WILL MINIMALLY IMPACT OUR PLANS.

CHARLIE. WE PLAN TO DELIVER STEVE'S TOLERANCE RELAXATION TEST REPORT TO GEORGE ON FRIDAY, AND ALSO INFORM HIM OF OUR RECENT DISCUSSIONS WITH STAN BRAGUON OF THE SAE J512 COMMITTEE.

77 PS

EASTERN AUTOMATION, WHO IS DEVELOPING THE SPRING FORMING/SPRING ATTACHMENT MACHINE, WILL BE DEBUGGING IN MARCH. THEY AND MECHANIZATION HAVE ASKED US TO CONFIRM OUR ANGLE AND FORCE SPECIFICATIONS THAT APPEAR ON THE PRINT. STEVE WILL CONDUCT SOME FORCE-DEFLECTION MEASUREMENTS ON THE MODEL SHOP SPRINGS TO GIVE SOME PRELIMINARY FEEDBACK. EASTERN HAS NOT BUILT IN AN ADJUSTMENT FEATURE IN THE BENDING STATION, AND WE ARE UNSURE AT THIS POINT IF WE SHOULD MANDATE THIS.

PRODUCTION INTENT SWITCHES ARE CURRENTLY BEING BUILT FOR CALIBRATION PROVE-OUT AND FOR DESIGN EVALUATION. THE LATTER INCLUDES TEST-TO-FAILURE OF THE SPRING, SUCCESS TESTING OF TWO CONTACT DESIGNS AND PIN WINDOW EVALUATION.

MILESTONES	PLANNED	ACTUAL
57 L/T IBIR	11/21/90	11/21/90
57 L/T JOB 1	07/01/91	
57 P/C IBIR	01/15/91	01/15/91
57 P/C JOB 1	06/03/91	
77PS IBIR	06/01/91	
77PS SOP (TI)	09/01/91	

PRODUCTION PLAN BY MONTH (THOUSANDS)

	P/C 57PSL5-3	L/T 57PSL5-2	P/C 77PSL2-1	L/T 77PSL2-2
FEB	0	0	0	0
MAR	5	0	0	0
APR	5	0	0	0
MAY	10	3	0	0
JUN	*17	4	0	0
JUL	17	*5	0	0
AUG	17	7	4	0
SEP	17	7	10	0
OCT	0	7	**12	5
NOV	0	7	17	7
DEC	0	0	17	**7

NOTE: PLAN FOR AUGUST AND BEYOND IS TENTATIVE.
* = JOB1 FOR 57PS VERSIONS
** = TENTATIVE JOB1 FOR 77PS VERSIONS

REGARDS,
DAVE CZARN \S-FORD

MSGD320 - MSG Number 00001905 delivered from PCQA on 01/25/91 at 07:17 AM
The input was from PCQA at terminal LDRO The RECIPIENTS were:
PCQA PCQA PCQA

[illegible]

[illegible]

[illegible]

OTIA copy

TO:	[illegible]	[illegible]	CC:	TOM CHARBONEAU	[illegible]
	[illegible]	[illegible]		JOHN [illegible]	[illegible]
	CHARLIE DOUGLAS	[illegible]		STEVE [illegible]	[illegible]
	[illegible]	[illegible]		[illegible]	[illegible]
	[illegible]	[illegible]		[illegible]	[illegible]
	[illegible]	[illegible]		JOE [illegible]	[illegible]
	[illegible]	[illegible]		[illegible]	[illegible]
	[illegible]	[illegible]		[illegible]	[illegible]
	BILL SWEET	[illegible]		TED BALLARD	[illegible]
	GEORGE LANDIS	[illegible]		DAVE VARNEY	[illegible]
	JOHN HAYNES	[illegible]		SCOTT MITTON	[illegible]
				CLAYTON [illegible]	[illegible]
				BILL [illegible]	[illegible]
FYI:	[illegible]	[illegible]			

SUB: [illegible] CONTROL [illegible] SWITCH [illegible] MEETING
[illegible] MEETING MINUTES

[illegible]

THE NEXT MEETING IS SCHEDULED FOR

DATE: [illegible] (THURSDAY)
TIME: 10:00-11:30 AM
PLACE: MARKETING CONFERENCE ROOM

PLEASE CALL ME IF YOU ARE NOT ABLE TO ATTEND

---

* = ITEMS THAT ARE NEW OR HAVE BEEN REVISED OR COMPLETED SINCE PREVIOUS MEETING

ST LIST	WHO	WHEN	
HARDWARE:			
. ELEC CONTROL PLAN	KOTCH	01/07	[illegible]
DELAYED DUE TO [illegible] BASING DEFINITION		[illegible]	[illegible]
. [illegible] CORRECTIVE ACTIONS:			
* A. TERMINAL DIMENSIONS			
- M.O. STUDIES FROM AU KNOTT	KOTCH	01/09	[illegible]
		[illegible]	[illegible]
		[illegible]	[illegible]
[illegible] LIST RUN	[illegible]	[illegible]	[illegible]
	[illegible]	[illegible]	[illegible]
. [illegible] DIA PARTS LIST	[illegible]	[illegible]	[illegible]
[illegible] DATE [illegible]	[illegible]	[illegible]	[illegible]

Dave [illegible] Value [illegible] SPC/TTPS [illegible] [illegible] this week

[illegible] again

[illegible] to achieve [illegible] by 3/21

[redacted]

[illegible] SELLERS/ 03/07 [illegible]

[illegible]

[illegible]	[illegible]	[illegible]
[illegible]	[illegible]	[illegible]
[illegible]	[illegible]	[illegible]
[illegible]	[illegible]	[illegible]
. [illegible]	[illegible]	[illegible]

TYPE

. DESIGN UPDATE	[illegible]	[illegible]
MFG/MECH UPDATE	SELLERS	[illegible]
. REPORT ON TOOLING RESPONSIBILITY	DOUGLAS	[illegible]
. PROD. LINE SETUP, PRE PHASE [illegible]	DALTA [illegible]	[illegible]
. COMPLETE DESIGN FMEA	[illegible]	[illegible]
. COMPLETE PROCESS FMEA	SELLERS	[illegible]
. PROD. LINE LAYOUT	SELLERS	[illegible]
PRC [illegible] FLAWS RELATED CRITICAL TOPIC	[illegible]	[illegible]
ITEMS TO TAKE [illegible] TYPE.		[illegible]
* IMPULSE TEST [illegible] CURRENT CONTACT AT SLOWER CYCLE RATE	[illegible]	[illegible]
* CORRECTED MODEL S-C- PROG. INTENT PARTS	[illegible]	[illegible]
* DETERMINE ACCEPTABLE CALIBRATION WINDOW	[illegible]	[illegible]
RELEASE SUPPLY LINE [illegible] MEAT MEETING	SELLERS	
IDENTIFY [illegible] TOOL FOR TOP	[illegible]	06/01
* TYPE [illegible]	[illegible]	07/01
* TYPE CHARACTERISTICS SHEETS	[illegible]	07/15
* SLOP TOP STUDIES	[illegible]	07/15
TYPE [illegible]	[illegible]	08/01
* SET UP SPC FILES	[illegible]	08/01

[illegible]

. BASE	[illegible]	02/28

PRODUCTION COMPONENTS:

. ALTERNATOR DRIVE PULL	[illegible]	[illegible]	
. REDUCE [illegible]	[illegible]	[illegible]	
. MOVABLE TERM.	LAVOIE	[illegible]	
. STATIONARY TERM.	LAVOIE	[illegible]	
. BASE	SELLERS	[illegible]	ORIG.
(AFCC DELIV. DATE PUSH-OUT)		[illegible]	REV.
. MEXPORT (P/N [illegible])	MOTCH	03/04	

MANUFACTURING EQUIPMENT:

. FINAL ASM MACHINE BUILD COMPLETION	SELLERS [illegible]	[illegible]
. BASE ASM MACHINE BUILD COMPLETION	SELLERS [illegible]	[illegible]
. PRESSURE TESTER BUILD COMPLETION	SELLERS [illegible]	[illegible]

FORD AUSTRALIA

. FORD AUSTRALIA UPDATE	DOUGLAS	[illegible]

DISCUSSION

[illegible]

[illegible]

[illegible]

[illegible]

[illegible]

[illegible]

CALIBRATED SERIES [illegible] TEST [illegible] THE GROUND/TERMINAL DESIGN. MODEL [illegible] TERMINAL AND [illegible] CLEARANCE ARE [illegible]. WITH THE ARM [illegible] AMPERE [illegible] 8 SENT. [illegible] IS EVALUATING WHAT [illegible] AS NEEDED.

CALIBRATED SWITCHES WERE SUCCESSFULLY IMPULSE TESTED. THE LOW CURRENT CONTACT ENSURED THE POWERED IMPULSE TESTS HOWEVER, SIGNIFICANT CONTACT HEATING WAS OBSERVED. THIS IS LIKELY DUE TO THE [illegible] RATE THAT IS SPECIFIED BY FORD, [illegible] UNREALISTICALLY FAST CONSIDERING THE APPLICATION. [illegible] TEST WILL BE CONDUCTED AT SLOWER RATES. [illegible] WILL BE ANALYZED BY FORD.

MODIFICATION TO THE PROTECTION SPRING DESIGN IS REQUIRED TO COMPENSATE FOR THE LATERAL MOVEMENT THAT TAKES PLACE WHEN THE SPRING ARM CLOSES. IT PRESENTS PROBLEMS WITH CONTACT ALIGNMENT AND BUMP ALIGNMENT, AS WELL AS THE POTENTIAL FOR INTERFERENCE BETWEEN THE ARM AND THE BODY. [illegible] AUTOMATION [illegible] WILL INDICATE THE REQUIRED CHANGES.

[illegible] THE SUPPLIER FOR THE ENVIRONMENTAL SEAL [illegible] HAS MISCALCULATED A PROBLEM. THE SEAL IS STILL [illegible] THEY ARE SUGGESTING USE OF FILL, WHICH [illegible] A HANDICAP IS BEING CONSIDERED FOR REIMPLICATIONS.

MILESTONES	PLANNED	ACTUAL
----------	---------	---------
[illegible]	[illegible]	[illegible]
[illegible]	[illegible]	
[illegible]	[illegible]	[illegible]
[illegible]	[illegible]	
77PS ISIR	09/01/91	
77PS BOP (TI)	09/01/91	

PRODUCTION PLAN BY MONTH (THOUSANDS)

	P/S 579ELF-2	[illegible] 577ELF-2	[illegible] 77PSLD-1	[illegible] 77PSLD-2
FEB	0	[illegible]	[illegible]	[illegible]
MAR	5	[illegible]	0	0
APR	5	[illegible]	0	[illegible]
MAY	[illegible]	3	[illegible]	[illegible]
JUN	*17	[illegible]	[illegible]	[illegible]
JUL	17	*5	3	0
AUG	17	7	4	0
SEP	17	7	10	0
OCT	[illegible]	[illegible]	**10	[illegible]
NOV	[illegible]	[illegible]	[illegible]	[illegible]
DEC	[illegible]	[illegible]	[illegible]	*[illegible]

NOTES: [illegible]

1. [illegible] FOR [illegible]

[illegible]

[illegible] MR [illegible] FR=/AGS TO=ZARN [illegible]
R#=000 ST=C DIV=0090 CC=00134 BY=/AGS AT=01 25 [illegible] AM

[illegible] STEVE HOMOL SH2
[illegible] LADISEVSKIS MDE3
SCOTT MARTIN MFPC
STEVE OFFILER SBO1
ANDRE CHARPENTIER MDES

[illegible] DAVE CZARN ZARN
DICK GARIEPY MFPC
JOHN KOURTESIS MDES
BILL SWEET PCME

R: MATT SELLERS PCME

J: CCPS PRESSURE TESTER MEETING MINUTES
==========

THE FOLLOWING ARE MINUTES FROM OUR MEETING THIS WEEK CONCERNING THE CCPS PRESSURE TESTER. DURING THE MEETING WE REVIEWED THE LIST OF QUESTIONS DEVELOPED BY THE CCPS START-UP TEAM CONCERNING THE CCPS PRESSURE TESTER.

MILLIVOLT TESTING

THERE WERE NO PLANS TO INCORPORATE A MILLIVOLT TEST BOARD IN THE CCPS PRESSURE TESTER, AND THE CIRCUIT TYPE IS NOT THE SAME AS THE 57PS TESTER. WE HAVE AGREED THAT THIS WILL CHANGE. WE WILL NOW INCORPORATE A CIRCUIT IDENTICAL TO THE 57PS TESTER. THE SCREEN INPUT SELECTION WILL ALSO ALLOW OPERATOR TO MAKE CHANGES TO THE MILLIVOLT THRESHOLD VALUE.

ACTIONS:

PROVIDE ANDRE C. WITH PROPER CURRENT/VOLTAGE VALUES FOR THE TEST.	STEVE	1/29
INCORPORATE MILLIVOLT CIRCUIT UPGRADE.	ANDRE	ASAP

CREEP DETECTION

THE CREEP DETECTION MILLISECOND VALUE WILL BE ADJUSTABLE THROUGH SCREEN INPUT AS IN THE 57PS TESTER.

NO ACTIONS REQUIRED.

OVER-PRESSURE PRE-CYCLES

IT WAS DISCUSSED THAT OVERPRESSURE PRE-CYCLES ARE ADJUSTABLE TO 90 PSI WITHOUT CONCERN OVER SEAL LIFE DEGRADATION.

NO ACTIONS REQUIRED.

HANDLING DAMAGE

[illegible]

[illegible] ALREADY BE PROTECTED BY WAY OF A THREAD [illegible]
INSTALLED IN-LINE AFTER PRESSURE TEST PRIOR TO DOWNLOAD.

ACTIONS:

INSURE RAMP EJECTION IS PRESENT IN DESIGN
[illegible] ED [illegible]

312 SEAL @ LEAK TEST

7PS TESTER USES A POLYURETHANE BLOCK THAT PRESSES AGAINST THE EXPORT DOG-POINT END DURING THE TEST CYCLE. THIS SAME METHOD WILL BE USED FOR CCPS. HOWEVER, MECHANIZATION HAS INDICATED THAT THERE MAY BE A CONCERN OVER BLOCK LIFE AS A RESULT OF THE SHARPER AREA IT COMES INTO CONTACT WITH. HIGHER MAINTENANCE FREQUENCY WILL PROBABLY RESULT. SEAL EFFECTIVENESS CONCERNS AS A RESULT OF THE SMALL SURFACE AREA ON THE [illegible] HAVE BEEN VOIDED. MECHANIZATION FEELS NO PROBLEMS WOULD BE EXPECTED.

ACTIONS:

PROVIDE BILL/MATT WITH URETHANE BLOCK PRINT. ED [illegible]

QUOTE OUTSIDE SUPPLIERS. BILL/MATT [illegible]

PASS CAR OFFSET POLARITY KEY

THE OFFSET KEY LOCATION OF THE PASS CAR VERSION WAS NOT [illegible] AMENDED IN THE ORIGINAL PROPOSAL. MECHANIZATION FEELS THAT THE ACCOMMODATIONS WILL BE MINOR AT FIRST GLANCE.

ACTIONS:

PROVIDE ED WITH 46515 PRINT. MATT 1/25

EVALUATE CHANGES REQUIRED AND ADVISE MATT. ED 2/1

ACTUATION/RELEASE SPECIFICATIONS

THE UPDATE TO THE ORIGINAL ACTUATION/RELEASE SPEC WILL NOT BE A PROBLEM, AND NO ACCOMMODATIONS ARE REQUIRED. THE NEW SPEC IS:

ACTUATION: 90 PSI MINIMUM - 850 PSI MAXIMUM
RELEASE: 20 PSI MINIMUM - 750 PSI MAXIMUM

ACTIONS:

PROVIDE ED [illegible] WITH UPDATED ENVELOPE PRINT. MATT 1/25

0 EVEL LEAK TEST

THIS WOULD INCREASE CYCLE TIME DRAMATICALLY, AND IS SUBJECT TO TECHNICAL EVALUATION AS TO THE PROPER METHOD. THE 7PSI RANGE MAY PRESENT SOME DIFFICULTIES. WE ARE NOT PURSUING THIS TEST ON THE CPS PRODUCT.

[illegible]

EAK RATE SPECIFICATION

PLANS TO INCORPORATE AN 9PSI SEC DECAY RATE THRESHOLD ON THE CCPS TESTER HAVE BEEN DETERMINED BY DESIGN TO BE INADEQUATE. GIVEN THE LOWER OPERATING PRESSURES OF THE CCPS PRODUCTS WE MAY WANT TO PERFORM LEAK TESTING UNDER DIFFERENT CRITERIA. THIS REQUIRES A [illegible] ORDINARY EFFORT IN THE FIRST [illegible] THE EQUIPMENT DESIGN. THEREFORE, WE WILL PROVIDE AN ADJUSTABLE LEAK TEST SETTLE THROUGH PROGRAM INPUT.

ACTIONS:

SOFTWARE PROVISION THAT WILL ALLOW MANIPULATION OF LEAK TEST CRITERIA. ANDRE [illegible]

RAMP RATES

PROBLEMS ENCOUNTERED WITH THE STPS TESTER WITH RESPECT TO THE FAST UP VALVE OVER-SHOOT ARE BEING ACCOUNTED FOR IN THE CCPS TESTER DESIGN.

ACTIONS:

VERIFY THAT THIS PROBLEM IS CORRECTED. ANDRE ASAF

HEXPORT VARIATIONS

THE INCORPORATION OF A HEXPORT WITH A MAJOR O.D. INCREASE OF [illegible] WILL NOT PRESENT AN INTERFERENCE PROBLEM WITH TESTER NESTING.

NO ACTIONS REQUIRED.

CATEGORIZATION OF BAD DEVICES

WE DISCUSSED THE INCORPORATION OF A NEW FALLOUT CATEGORIZATION METHOD. THE CURRENT TESTER PRESENTS THE OPERATOR WITH A "REASON BAD" FOR FALLOUT ACCORDING TO A PRIORITY HIERARCHY. IF MULTIPLE PROBLEMS EXIST WITHIN A DEVICE, THE SYSTEM IGNORES PROBLEMS LOWER IN THE HIERARCHY LIST AND DISCARDS THE DATA. AS AN ENGINEERING TOOL, THIS DISCARDED DATA MAY BE USEFUL. WE DISCUSSED SETTING UP A SYSTEM THAT WILL GENERATE A REPORT THAT TRACKS MULTIPLE DISCREPANCIES WITHIN A DEVICE, AND WOULD BE CAPABLE OF SUMMARIZING THE DATA ON A PERIODIC BASIS. SUCH A SYSTEM MAY PROVIDE SOME INSIGHT DURING TROUBLE ANALYSIS.

ACTIONS:

WORK OUT A MATRIX OF REALISTIC MULTIPLE DISCREPANCY SCENARIOS. STAVE/STAN/MATT [illegible]

REVIEW PROPOSED MATRIX AND INCORPORATE REPORTING PROCESS INTO SOFTWARE. ANDRE ASAF

-MSG MN= 184533 FR=VAGS TO=SB01 SENT=01/14/91 [illegible] PM
R#=067 BT=C DIV=0050 CC=00134 BY=VAGS AT=01/14/91 [illegible] PM

TO ED MADISEVSKIS MDES
JOHN KOURTESIS MDES

CC: DAVE CZARN ZARN
STAN HOMOL SHC
ED MADISEVSKIS MDES
SCOTT MARTIN MFPC
STEVE OFFILER SB01
BILL SWEET PCME
ANDRE CHARPENTIER MDES
DICK GARIEPY MFPC

FR: MATT SELLERS PCME

SJ: CCPS PRESSURE TESTER DISCUSSION MEETING MINUTES
==========

BELOW IS A LIST OF COMMENTS/ACTIONS FROM OUR MEETING TODAY CONCERNING THE NEW 77PS PRESSURE TESTER. SOME OF THESE ITEMS WILL THROWN ON THE TABLE FOR FURTHER DISCUSSION AT OUR NEXT SCHEDULED CCPS MECHANIZATION MEETING.

PLEASE REVIEW EACH ITEM AND PREPARE FOR DISCUSSION.

CD CRNS
==========

MILLIVOLT TESTING

IS A MILLIVOLT DROP TEST BEING INCORPORATED IN THE NEW TESTER. IS IT A DUPLICATION OF THE CURRENT 52PS/57PS PRESSURE TESTER CAPABILITY? DESIGN HAS INDICATED THAT A 500ma/200mv/7v TEST IS DESIRED/REQUIRED. IS THIS A POSSIBLE TEST SCENARIO IN THE 77PS TESTER?

CREEP DETECTION

IS THE CREEP DETECTION THRESHOLD ADJUSTABLE LIKE THE 52PS/57PS TESTER.

OVER-PRESSURE PREPCYCLES

SPECIFIED @ 800PSI MINIMUM, TWO CYCLES REQUIRED. ARE WE LIMITED TO 800 PSI OR CAN WE CHANGE AT MILL UP TO THE SYSTEM PRESSURE. ALSO, IS THE 1000 PSI MAX ON THE SYSTEM AN ARBITRARY CALL OUT BASED ON SYSTEM DUPLICATIONS. CAN THIS BE ADJUSTED TO 1100, 1500 ???

HANDLING DAMAGE

IS THERE A RAMPED EJECTION SYSTEM IN PLACE TO MINIMIZE SUBSEQUENT HA LING DAMAGE TO THREADS, BASE ETC.

J512 SEAL @ LEAK TEST

CONCERNS WERE DISCUSSED OVER THE ABILITY OF THE SYSTEM TO PERFORM AN ACCURATE LEAK TEST GIVEN THE REDUCTION OF SEALING SURFACE AREA ON THE J512 HEXPORT END. IS THE SURFACE AREA TOO SMALL?

[illegible]

ARE THERE ACCOMMODATIONS TO ALLOW FOR THE OFFSET KEY ON THE PASS CAR BASE WITHOUT INTERFERENCE IN THE NEST. ALSO, ARE THERE PLANS TO INSTALL A KEY LOCATION SENSING PROBE TO POKE YOKE THE TEST.

ACTUATION/RELEASE SPECIFICATIONS

KEITH ROBERTS' 5/29/90 SPEC. MEMO STATED 100PSI AS THE MINIMUM ACTUATION, AND 25PSI AS THE MINIMUM RELEASE. THE TRUE REQUIREMENTS ARE AS FOLLOWS:

ACTUATION: 90 PSI MINIMUM - 850 PSI MAXIMUM
RELEASE: 20 PSI MINIMUM - 750 PSI MAXIMUM

IS THIS A CONCERN?

LOW LEVEL LEAK TEST

ARE WE INCLUDING A TEST STATION ON THE OFF LOAD CONVEYOR, OR JUST LEAVING ROOM FOR FUTURE ADDITION.

SYSTEM OUTPUT CAPABILITIES

ARE THERE PLANS TO IMPROVE VISUAL ASPECTS OF THE OUTPUT BEYOND THE CURRENT CAPABILITIES. SUCH THINS AS HISTOGRAMS, PARETOS, ETC.

LEAK RATE SPECIFICATION

CURRENT SPEC IS 8 PSI/SEC @ 500 PSI OR MAX ACTUATION PLUS 10%. DOES THIS MEAN THAT WE CAN TEST FOR PRESSURE DECAY BELOW 500 PSI, OR IS 500 PSI THE MINIMUM TEST PRESSURE. IF IT IS BELOW 500 PSI, CAN WE ADJUST THE PSI/SEC DECAY SPECIFICATION AT WILL.

RAMP RATES

WE HAD TO SHUT OFF THE FAST UP VALVE ON THE 57PS PRESSURE TESTER TO ALLOW TESTING OF 125 AND 250 PSI ACTUATION DEVICES. THE FAST UP VALVE TENDED TO SHOOT THE APPLIED PRESSURE PAST THE ACTUATION TEST RANGE BEFORE THE SYSTEM COULD REACT. THEREFORE VOIDING THE TEST. ARE WE CONSIDERING THIS PROBLEM WITH THE NEW DESIGN.

HEXPORT VARIATIONS

PLANS ARE TO POSSIBLY INCLUDE A METRIC HEXPORT IN THE 77PB LINE OF PRODUCTS. THE MAJOR DIAMETER OF THIS THREAD IS ABOUT .017" LARGER THAN THE J512 HEXPORT. WILL THIS CREATE A CONCERN OVER INTERFERENCE.

CATEGORIZATION OF BAD DEVICES

CURRENT PRIORITY IS AS FOLLOWS: B-LEAK, C-CONTINUITY FAIL, D-CREEP ACTUATION, E/F-ACTUATION HIGH OR LOW, G/H-RELEASE HIGH OR LOW, I-DIFFERENTIAL, L-RELEASE CREEP.

ARE THESE PRIORITIES REARRANGED EASY, AND CAN WE CHANGE THE CRITERIA FOR EACH FAILURE MODE.

I WOULD LIKE TO REVIEW THIS MEMO AT THE NEXT CCPS MECHANIZATION MEETING. HOWEVER IF YOU FEEL THAT A SEPERATE MEETING IS APPROPRIATE PLEASE CALL.

REGARDS...MATT

MSG MM= 13472 FR=VAGS TO=ZARN SENT=01/25/91 07:22 AM
R#=000 ST=C DIV=0050 CC=00134 BY=VAGS AT=01/25/91 07:22 AM

O: STAN HOMOL SHO
ED MADISEVSKIS MDES
SCOTT MARTIN MFPC
STEVE OFFILER SBO1
ANDRE CHARPENTIER MDES

C: DAVE CZARN ZARN
DICK DARIEPY MFPC
JOHN KOURTESIS MDES
BILL SWEET PCME

R: MATT SELLERS PCME

U: CCPS PRESSURE TESTER MEETING MINUTES
==========

THE FOLLOWING ARE MINUTES FROM OUR MEETING THIS WEEK CONCERNING THE CCPS PRESSURE TESTER. DURING THE MEETING WE REVIEWED THE LIST OF QUESTIONS DEVELOPED BY THE CCPS START-UP TEAM CONCERNING THE CCPS PRESSURE TESTER.

MILLIVOLT TESTING

THERE WERE NO PLANS TO INCORPORATE A MILLIVOLT TEST BOARD IN THE CCPS PRESSURE TESTER, AND THE CIRCUIT TYPE IS NOT THE SAME AS THE 57PS TESTER. WE HAVE AGREED THAT THIS WILL CHANGE. WE WILL NOW INCORPORATE A CIRCUIT IDENTICAL TO THE 57PS TESTER. THE SCREEN INPUT SELECTION WILL ALSO ALLOW OPERATOR TO MAKE CHANGES TO THE MILLIVOLT THRESHOLD VALUE.

ACTIONS:

PROVIDE ANDRE C. WITH PROPER CURRENT/VOLTAGE VALUES FOR THE TEST.	STEVE	1/29
INCORPORATE MILLIVOLT CIRCUIT UPGRADE.	ANDRE	ASAP

CREEP DETECTION

THE CREEP DETECTION MILLISECOND VALUE WILL BE ADJUSTABLE THROUGH SCREEN INPUT AS IN THE 57PS TESTER.

NO ACTIONS REQUIRED.

OVER-PRESSURE PRE-CYCLES

IT WAS DISCUSSED THAT OVERPRESSURE PRE-CYCLES ARE ADJUSTABLE TO 00 PSI WITHOUT CONCERN OVER SEAL LIFE DEGRADATION.

NO ACTIONS REQUIRED.

HANDLING DAMAGE

THERE WILL BE A RANKED EJECTION SYSTEM THAT WILL REDUCE THE

EAK RATE SPECIFICATION

LANS TO INCORPORATE AN 8PSI/SEC DECAY RATE THRESHOLD ON THE CCPS ESTER HAVE BEEN DETERMINED BY DESIGN TO BE INADEQUATE. GIVEN THE OWER OPERATING PRESSURES OF THE CCPS PRODUCTS WE MAY WANT TO ERFORM LEAK TESTING UNDER DIFFERENT CRITERIA. THIS PRESENTS NO X ORDINARY EFFORT ON THE PART OF THE EQUIPMENT DESIGN. HEREFORE, WE WILL PROVIDE AN ADJUSTABLE LEAK TEST SET-UP THROUGH CREEN INPUT.

CTIONS:

OFTWARE PROVISION THAT WILL ALLOW MANIPULATION F LEAK TEST CRITERIA.	ANDRE	ASAP

AMP RATES

ROBLEMS ENCOUNTERED WITH THE 57PS TESTER WITH RESPECT TO THE FAST P VALVE OVER-SHOOT ARE BEING ACCOUNTED FOR IN THE CCPS TESTER ESIGN.

CTIONS:

ERIFY THAT THIS PROBLEM IS CORRECTED.	ANDRE	ASAP

EXPORT VARIATIONS

HE INCORPORATION OF A HEXPORT WITH A MAJOR O.D. INCREASE OF .019" DI NOT PRESENT AN INTERFERENCE PROBLEM WITH TESTER NESTING.

O ACTIONS REQUIRED.

ATEGORIZATION OF BAD DEVICES

E DISCUSSED THE INCORPORATION OF A NEW FALLOUT CATEGORIZATION ETHOD. THE CURRENT TESTER PRESENTS THE OPERATOR WITH A 'REASON AD' FOR FALLOUT ACCORDING TO A PRIORITY HIERARCHY. IF MULTIPLE ROBLEMS EXIST WITHIN A DEVICE, THE SYSTEM IGNORES PROBLEMS LOWER N THE HIERARCHY LIST AND DISCARDS THE DATA. AS AN ENGINEERING OOL, THIS DISCARDED DATA MAY BE USEFUL. WE DISCUSSED SETTING UP SYSTEM THAT WILL GENERATE A REPORT THAT TRACKS MULTIPLE ISCREPANCIES WITHIN A DEVICE, AND WOULD BE CAPABLE OF SUMMARIZING HE DATA ON A PERIODIC BASIS. SUCH A SYSTEM MAY PROVIDE SOME NSIGHT DURING TROUBLE ANALYSIS.

CTIONS:

ORK OUT A MATRIX OF REALISTIC MULTIPLE ISCREPANCY SCENARIOS.	STAVE/STAN/ MATT	1/30
EVIEW PROPOSED MATRIX AND INCORPORATE EPORTING PROCESS INTO SOFTWARE.	ANDRE	ASAP

TI-NHTSA 001875

HIGHLIGHTS
Stephen B. Offler
Week Ending 01/25/91

FORD MY'92 ELECTRONIC SPEED CONTROL DEACTIVATE PS

HEXPORT: Stan Bragdon of the SAE J512 committee has recontacted us regarding our proposed changes to J512. He agrees with our graphical analysis, and is leaning towards bringing our recommended changes to the committee. However, he must perform similar analyses on each nominal tubing size; our analysis concerned itself only with our particular size. Furthermore, he feels that a deformable element must be present; normally this is the flared brake tubing. Of course, no tubing exists with our plug geometry. Stan referred me to J513f, Refrigeration Fittings, where a "Flare Gasket" is described. He's looking into the possibility that J512 is in error, and that a gasket of this type was originally intended for J512 in the absence of tubing. *Bottom line:* resolution of this issue will come eventually now that the ball is rolling, but it will not be quick enough to be useful in our negotiations with George Randall.

I have completed a 32-page report of the results of our testing of the new, proposed J512 dimensions. All combinations of worst-case tolerance stack-ups passed all tests. We noted that in every case, the steel hexport (plug geometry) deformed the brass mating part in making a seal. This lends credence to Stan's idea of a flare gasket, although it seems application would be required only in the case of steel-on-steel. Dave Cram is hand-delivering copies of this report today to Bruce Pease and George Randall, and I have sent one to Stan as well. Additional copies are available, see me.

We have met with Howard Nelson of T-D-R Co. Inc. regarding a real-world implementation of the J512 chamfer gaging concept using spherical shapes. We brainstormed an approach and developed very rough sketches of the required fixture. He has responded with a rough quote of $6400 for design/build of two gages, one for us and one for Elco. We plan to proceed with this. Mfg. Eng. will impose some type of contract with T-D-R which holds them responsible for guaranteeing an acceptable R&R. Elco has tentatively agreed to pick up half of the tab.

SAMPLES, CUSTOMER ISSUES: SREA's (Supplier Request for Engineering Approval) have been written, proposing the removal of the problematic terminal-position tolerance on the envelope prints. Our position on this issue is described in the verbage: the tight tolerance is based on insert-molding process capabilities; none of our present Ford power-steering or brake switches include this tolerance, and we have shipped approx. 10KK switches to date with zero terminal-related RMR's. Dave Cram is hand-delivering the SREA's today.

Bruce Pease requested that the latest envelope print iteration include a description of the revisions directly on the print. This is because the latest changes are all J512 related, and he wants absolutely clear documentation. Drafting has added the revision detail in the upper-right corner of the prints. These were overnited to Bruce yesterday. He is releasing these prints, which casts the new, modified J512 tolerances in concrete.

Twenty "Functional Build" Light Truck 57PS's were shipped. These are production-level parts, which assume completion of ISIR, and which are shipped directly to B&A. The required special paperwork was completed, along with a functional build tag affixed to each of the twenty switches.

SAMPLES, CONTINUED: Six Pass-Car samples were shipped to Surfaces. These are the first parts shipped (other than a few direct to Bruce) to use the offset key bases. We are coloring the keys black (on gray bases) at Bruce's request to help differentiate these parts. This procedure will continue until SOP.

Mike McHugh reports that he is presently building metric hexports for the Ford of Australia samples. Part of the delay has been caused by the need to obtain the correct lathe collet and the correct material. I have informed him that in the future he may use certain alternate materials which are typically available from AFCC Screw Machines. Charlie has contacted F of A to inform them of the delay. These parts originally should have shipped 01/10 for receipt by 01/17.

77PS: The final review of the production 46515 base mold design was held. Various items such as cavity ID's, tolerances in historically problematic areas, and interference tab details were discussed and will be updated on 46515 as soon as possible.

Dave Pudpoll has completed tool modifications to allow viewing and making of prototype 77PS components. We have built about 30 switch assemblies to date. Most of these will be used by Mechanization in calibrator debug. We are making plans to build molds, and to have the model shop create mass terminals and springs, to be used for spring life testing, contact testing, pin window experiments, calibrator debug, and customer samples.

A meeting was held with Mechanization to discuss details of the 77PS pressure tester. Highlighted items include: millivolt drop measurement and continuity definition; design of the polyurethane seal, recognizing the geometry of the J512 hexport seal; leak check mass at the lower 77PS actual pressure and the minimum resolution of the equipment; accomodations in fixturing for the offset-key bases; and ~~comparation of failure~~ recognizing the deficiencies of the present failure prioritization system. STAN

MISCELLANEOUS: We are presently working with Drafting to set up Parts Lists for the 57PS Pass-Car devices, which also involves the addition of dash numbers to various established 57 component and subassembly drawings. We are holding off on Light Truck until the end of January when resolution of the hexport issue is expected.

NO-HOLE SPACER, STAN? (-3) [illegible]
[illegible] W/O HOLE
-1 ONLY ONE W/ HOLE

HIGHLIGHTS
Stephen B. Offiler
Week Ending 01/25/91

FORD MY'92 ELECTRONIC SPEED CONTROL DEACTIVATE PS

HEXPORT: Stan Bragdon of the SAE J512 committee has recontacted us regarding our proposed changes to J512. He agrees with our graphical analysis, and is leaning towards bringing our recommended changes to the committee. However, he must perform similar analyses on each nominal tubing size; our analysis concerned itself only with our particular size. Furthermore, he feels that a deformable element must be present; normally this is the flared brake tubing. Of course, no tubing exists with our plug geometry. Stan referred me to J513f, Refrigeration Fittings, where a "Flare Gasket" is described. He's looking into the possiblity that J512 is in error, and that a gasket of this type was originally intended for J512 in the absence of tubing. *Bottom line:* resolution of this issue will come eventually now that the ball is rolling, but it will not be quick enough to be useful in our negotiations with George Randall.

I have completed a 32-page report of the results of our testing of the new, proposed J512 dimensions. All combinations of worst-case tolerance stack-ups passed all tests. We noted that in every case, the steel hexport (plug geometry) deformed the brass mating port in making a seal. This lends credence to Stan's idea of a flare gasket, although it seems application would be required only in the case of steel-on-steel. Dave Czam is hand-delivering copies of this report today to Bruce Pease and George Randall, and I have sent one to Stan as well. Additional copies are available, see me.

We have met with Howard Nelson of T-D-R Co. Inc. regarding a real-world implementation of the J512 chamfer gaging concept using spherical shapes. We brainstormed an approach and developed very rough sketches of the required fixture. He has responded with a rough quote of $6400 for design/build of two gages, one for us and one for Elco. We plan to proceed with this. Mfg. Eng. will impose some type of contract with T-D-R which holds them responsible for guaranteeing an acceptable R&R. Elco has tentatively agreed to pick up half of the tab.

SAMPLES. CUSTOMER ISSUES: SREA's (Supplier Request for Engineering Approval) have been written, proposing the removal of the problematic terminal-position tolerance on the envelope prints. Our position on this issue is described in the verbage: the tight tolerance is based on insert-molding process capabilities; none of our present Ford power-steering or brake switches include this tolerance; and we have shipped approx. 10KK switches to date with zero terminal-related RMR's. Dave Czam is hand-delivering the SREA's today.

Bruce Pease requested that the latest envelope print iteration include a description of the revisions directly on the print. This is because the latest changes are all J512 related, and he wants absolutely clear documentation. Drafting has added the revision detail in the upper-right corner of the prints. These were overnited to Bruce yesterday. He is releasing these prints, which casts the new, modified J512 tolerances in concrete.

Twenty "Functional Build" Light Truck 57PS's were shipped. These are production-level parts, which assume completion of ISIR, and which are shipped directly to B&A. The required special paperwork was completed, along with a functional build tag affixed to each of the twenty switches.

SAMPLES, CONTINUED: Six Pass-Car samples were shipped to Surfaces. These are the first parts shipped (other than a few direct to Bruce) to use the offset key bases. We are coloring the keys black (on gray bases) at Bruce's request to help differentiate these parts. This procedure will continue until SOP.

Mike McHugh reports that he is presently building metric hexports for the Ford of Australia samples. Part of the delay has been caused by the need to obtain the correct lathe collet and the correct material. I have informed him that in the future he may use certain alternate materials which are typically avaiable from APCC Screw Machines. Charlie has contacted F of A to inform them of the delay. These parts originally should have shipped 01/10 for receipt by 01/17.

77PS: The final review of the production 46515 base mold design was held. Various items such as cavity ID's, tolerances in historically problematic areas, and interference tab details were discussed and will be updated on 46515 as soon as possible.

Dave Peripoli has completed tool modifications to allow riveting and making of prototype 77PS components. We have built about 50 switch assemblies to date. Most of these will be used by Mechanization in calibrator debug. We are making plans to build more, and to have the model shop create more terminals and springs, to be used for spring life testing, contact testing, pin window experiments, calibrator debug, and customer samples.

A meeting was held with Mechanization to discuss details of the 77PS pressure tester. Highlighted items include: millivolt drop measurement and continuity definition; design of the polyurethane seal, recognizing the geometry of the J512 hexport end; leak check rates at the lower 77PS act/sel pressures and the minimum resolution of the transducers; accomodations in fixturing for the offset-key bases; and categorization of failures, recognizing the deficiencies of the present failure prioritization system.

MISCELLANEOUS: We are presently working with Drafting to set up Parts Lists for the 57PS Pass-Car devices, which also involves the addition of dash numbers to various established 57 component and subassembly drawings. We are holding off on Light Track until the end of January when resolution of the hexport issue is expected.

PRESSURE SWITCH DATA Form 21605 TEST NO. 124-15-07

DEVICE	DATE REQUESTED	REQUESTED BY	REQUESTED COMPL. DATE
JSH Hexports	—	Steve O	

PERFORMED BY	DATE STARTED	DATE COMPLETED	APPROVED BY
Jeff O	1/29/91	2-1-91	

PROJECT TITLE: Electronic Speed Control Actuator Switch

CUSTOMER

PURPOSE OF TEST: Torque vs Degrees test on JSH Hexports.

PROCEDURE: Device Hexports: 1 Elec CNC Port, one m/s high Port (117-07-07), one m/s Low Port (117-07-01). Hand-tighten until sealing surfaces meet. Tighten further in 45° intervals measuring peak torque for each interval.

TI-NHTSA 001650

-MSG MN= 62165 FR=CZRN TO=PCOA SENT=01/28/91 11:56 AM
RN=131 ST=C DIV=0050 CC=00101 BY=CZRN AT=01/28/91 11:56 AM

TO:	STEVE OFFILER	SR01	CC:	TOM CHARBONEAU	TC
	CHARLIE DOUGLAS	CPPC		GARY SNYDER	CPPC
	MATT SELLERS	PCME		MARTHA SULLIVAN	CPPC
	BILL SWEET	PCME		ANDY McGUIRK	PCOA
	MIKE DENATTIA	PCOA		STEVE MAJOR	WALZ
	JOHN HAYNES	PCOA		ED O'NEILL	EJON
	JOE SCHUCK	WALZ			
	PAUL KOTCH	PRK1			
FR:	DAVE CZARN	ZARN			

RE: FORD TRIP REPORT - CRUISE CONTROL PRESSURE SWITCH

MEETING DATE: 01/25/91

ATTENDEES: BRUCE PEASE - RELEASE ENGINEER P/C BRAKE
GEORGE RANDALL - RELEASE ENGINEER L/T NORC
JOE SCHUCK
DAVE CZARN

OVERVIEW:

- GEORGE AND BRUCE HAVE BOTH AGREED TO REMOVE THE TERMINAL POSITIONAL TOLERANCE FROM THE PRINTS (57 AND 77 STYLE). ALLOWING US FULL IBR APPROVAL FOR THE 57PS VERSIONS.

- IT IS LIKELY THAT BOTH L/T AND P/C WILL APPROVE THE RELAXED TOLERANCE J512 HEXPORT.

- GEORGE BROUGHT UP THE J512 PRICING FOR DISCUSSION, AS HE FEARS THE ADDED COST WILL BE CHARGED TO HIM AS ENGINEERING CHANGE RELATED. IT NEEDS TO WORK WITH FORD PURCHASING TO RESOLVE THIS.

NOTES:

.
THE REMOVAL OF THE TERMINAL POSITIONAL TOLERANCE WILL ENABLE US TO BECOME FULLY IBR APPROVED FOR 57PS L/T AND P/C. GEORGE AND BRUCE CONCURRED THAT EVEN A GROSSLY MISALIGNED TERMINAL WOULD ALLOW FOR MATING CONNECTOR FIT-UP. WE ALSO USED OUR 57PS SWITCH HISTORY TO SUPPORT THE CHANGE. THE WAY IN WHICH THE CCPS TEAM PRESENTED THE IBR REPORT AND FOLLOW-UP WAS THE KEY TO THE QUICK RESOLUTION OF THIS ISSUE - NICELY DONE!

.
GEORGE HAS CHANGED HIS OPINION ON THE RELAXED TOLERANCE J512 SEAL, DUE MOSTLY TO STEVE'S PAPER ANALYSIS, TESTING AND WORK WITH K-H AND THE J512 COMMITTEE. BOTH WERE PLEASED WITH THE WORK WE'VE DONE TO PROVE OUT THE RELAXED TOLERANCE DESIGN, AND THEY WILL REVIEW OUR TEST REPORT THIS WEEK. GEORGE STATED THAT IF HE DID NOT FIND ANY PROBLEM WITH OUR ANALYSIS, AND IF BRUCE APPROVES THE DESIGN, HE WILL ALSO APPROVE IT.

.
BRUCE WOULD LIKE TO SEE DATA THAT CORRELATES SWITCH ROTATION VS. TORQUE (DURING ASSEMBLY TO THE MATING FITTING). HE WOULD ALSO LIKE US TO SEND A COPY OF THE RELAXED TOLERANCE TEST REPORT TO PITTS AND WEATHERHEAD, ALONG WITH THIS DATA. JOE IS HAND-DELIVERING A COPY OF THE REPORT TO KELSEY-HAYES, SO WE NEED TO SEND THEM ONLY THE TORQUE DATA.

ACTION:
- SEND TEST REPORTS AND DATA - OFFILER 02/01

.
BRUCE WOULD LIKE US TO SUBMIT 2 ENVELOPE DRAWINGS, 1 WITH THE HEXPORT AND BASE DIMENSIONAL CHANGES AND 1 WITH THE TERMINAL POSITIONAL TOLERANCE REMOVED.

ACTION:
- CLOSE WITH BRUCE TO ESTABLISH A COMPLETION DATE - OFFILER 02/01

IN SUMMARY, WE HAD A VERY SUCCESSFUL MEETING WITH BRUCE AND GEORGE AND WE ARE CLOSE TO CLEARING TWO MAJOR HURDLES. HOWEVER, IT WAS THE TEAM'S WORK PRECEDING THE MEETING THAT REALLY PAVED THE WAY.

REGARDS,
DAVE CZARN
\3-CCPS

MSG MN= 62165 FR=CZRN TO=ELB SENT=01/28/91 11:56 AM
RN=105 ST=C DIV=0050 CC=00101 BT=CZRN AT=01/28/91 11:56 AM

):	STEVE OFFILER	SBDI	CC:	TOM CHARBONEAU	TC
	CHARLIE DOUGLAS	CPPC		GARY SNYDER	CPPC
	MATT SELLERS	PCME		MARTHA SULLIVAN	CPPC
	BILL SWEET	PCME		ANDY McQUIRK	PCQA
	MIKE DEMATTIA	PCQA		STEVE MAJOR	WHLZ
	JOHN HAYNES	PCQA		ED O'NEILL	EJON
	JOE SCHUCK	WHLZ			
	PAUL KOTCH	PRK1			
R:	DAVE CZARN	ZARN			

:: FORD TRIP REPORT - CRUISE CONTROL PRESSURE SWITCH

:ETING DATE: 01/25/91

'TENDEES: BRUCE PEASE - RELEASE ENGINEER P/C BRAKE
GEORGE RANDALL - RELEASE ENGINEER L/T NSSC
JOE SCHUCK
DAVE CZARN

/ERVIEW:

GEORGE AND BRUCE HAVE BOTH AGREED TO REMOVE THE TERMINAL
:BITIONAL TOLERANCE FROM THE PRINTS (57 AND 77 STYLE), ALLOWING US
:LL IBR APPROVAL FOR THE 57PS VERSIONS.

IT IS LIKELY THAT BOTH L/T AND P/C WILL APPROVE THE RELAXED TOLERANCE
1 HEXPORT.

GEORGE BROUGHT UP THE J512 PRICING FOR DISCUSSION, AS HE FEARS THE
:OED COST WILL BE CHARGED TO HIM AS ENGINEERING CHANGE RELATED. TI
:EDS TO WORK WITH FORD PURCHASING TO RESOLVE THIS.

:TES:

:E REMOVAL OF THE TERMINAL POSITIONAL TOLERANCE WILL ENABLE US TO
:COME FULLY IBR APPROVED FOR 57PS L/T AND P/C. GEORGE AND BRUCE
:NCURRED THAT EVEN A GROSSLY MISALIGNED TERMINAL WOULD ALLOW FOR
:TING CONNECTOR FIT-UP. WE ALSO USED OUR 57PS SWITCH HISTORY TO
:PPORT THE CHANGE. THE WAY IN WHICH THE CCPS TEAM PRESENTED THE IBR
:PORT AND FOLLOW-UP, WAS THE KEY TO THE QUICK RESOLUTION OF THIS
:SUE - NICELY DONE!

:ORGE HAS CHANGED HIS OPINION ON THE RELAXED TOLERANCE J512 SEAL,
:E MOSTLY TO STEVE'S PAPER ANALYSIS, TESTING AND WORK WITH K-H AND
:E J512 COMMITTEE. BOTH WERE PLEASED WITH THE WORK WE'VE DONE TO
:OVE OUT THE RELAXED TOLERANCE DESIGN, AND THEY WILL REVIEW OUR
:ST REPORT THIS WEEK. GEORGE STATED THAT IF HE DID NOT FIND ANY
:OBLEM WITH OUR ANALYSIS, AND IF BRUCE APPROVES THE DESIGN, HE WILL
:SO APPROVE IT.

:UCE WOULD LIKE TO SEE DATA THAT CORRELATES SWITCH ROTATION VS.
:RQUE (DURING ASSEMBLY TO THE MATING FITTING). HE WOULD ALSO LIKE
: TO SEND A COPY OF THE RELAXED TOLERANCE TEST REPORT TO PITTS AND
:ATHERHEAD, ALONG WITH THIS DATA. JOE IS HAND-DELIVERING A COPY OF
:E REPORT TO KELSEY-HAYES, SO WE NEED TO SEND THEM ONLY THE TORQUE
:TA.

TION!
SEND TEST REPORTS AND DATA - OFFILER 02/01

UCE WOULD LIKE US TO SUBMIT 2 ENVELOPE DRAWINGS, 1 WITH THE REPORT
D BASE DIMENSIONAL CHANGES AND 1 WITH THE TERMINAL POSITIONAL
ANCE REMOVED.

TION!
CLOSE WITH BRUCE TO ESTABLISH A COMPLETION DATE - OFFILER 02/01

SUMMARY, WE HAD A VERY SUCCESSFUL MEETING WITH BRUCE AND GEORGE
D WE ARE CLOSE TO CLEARING TWO MAJOR HURDLES. HOWEVER, IT WAS THE
AM'S WORK PRECEDING THE MEETING THAT REALLY PAVED THE WAY.

BARDS,
VE CZARN
-CCPS

TEXAS INSTRUMENTS

ATTLEBORO, MASSACHUSETTS 02703

PAGE 1 OF 2

SAMPLE REPORT

REASON FOR REPORT		VENDOR		P.O.	PART NO.	REV.
NEW PART	✓	Valentine Tool			277[illegible]-1	A
REPLACEMENT TOOL		REPORT REQ. BY	DATE	INSPECTED BY		DATE
CORRECTED TOOL		M Sellers	1/31/91	Jeanne Geddes		2 [illegible] 91
REPAIRED TOOL						
REVIEW						
OTHER						

THE DIMENSIONS INDICATED BELOW REPRESENT TEXAS INSTRUMENTS' FINDINGS REGARDING THE ACTUAL VALUES FOR ALL CHARACTERICS MEASURED. IN CASES WHERE ACTUAL VALUES DEVIATE FROM THE SPECIFIED DIMENSIONS, THE DISPOSITION MUST INDICATE THE REQUIRED ACTION FOR EACH NON-CONFORMANCE IN THE APPROPRIATE COLUMN.

	(CIRCLE ALL OUT OF TOLERANCE DIMENSIONS)					DISPOSITION
	Sample	1	2		Insp. Method	
1	1.065 - 1.069	X 1.0675	1.0669		TM	
		Y 1.0680	1.0676			
2	.835 - .839	X .8382	.8389			
	⌖ .003 Ⓢ A Ⓢ	Y .8379	.8376			
		⌖ .0009	.0002			
		⌖ .0009	.0004			
		⌖ .0025	.0009			
3	.158 - .161	X .1598	.1601			
	⌖ .003 Ⓢ A Ⓢ	Y .1599	.1599			
		⌖ .0007	.0026			
		⌖ .0005	.0003			
		⌖ .0015	.0052			Re-Submission Req
4	.010 R max.	.030R	.030R		Unit. Mic	
	2 places	.005R	.005R		TM	" "
5	.028 - .032 R	.025R	.025R		TM	" "
6	▱ .0015	.0005	.0005		Dial Ind.	
7	Note #4	.030R	.030R		TM.	" "
8	.005R max.	.015R	.015R		Unit. Mic	
		.010R	.010R			" "
9	.005R max.	.004R	.003R			
10	No burrs allowed.	OK	OK		TM	
11	.910 max.	X .9059	.9047			
		Y .9047	.9056			
12	.795 min. flat	X .8088	.8107			
		Y .8079	.8091			
13	.468 - .472	X .4661	.4654			" "

REMARKS AND/OR INSTRUCTIONS: .0002 - .0004 plating to be applied.

4: Adjacent to the outer radius is a .005R - .010R rib

DISPOSITION: TOOL APPROVED FOR PROD. | RESUBMISSION REQ'D

PD. ENG.: [signature] 2/20/91 | QRA ENG.:

PURCH. AGENT:

TI-NHTSA 001684

RM NO. 30789

TEXAS INSTRUMENTS

SAMPLE REPORT

REASON FOR REPORT		VENDOR		P.O.	PART NO.	REV.
NEW PART					37713-1	A
REPLACEMENT TOOL		REPORT REQ. BY	DATE	INSPECTED BY		DATE
CORRECTED TOOL						
REPAIRED TOOL						
REVIEW						
OTHER						

THE DIMENSIONS INDICATED BELOW REPRESENT TEXAS INSTRUMENTS' FINDINGS REGARDING THE ACTUAL VALUES FOR ALL CHARACTERICS MEASURED. IN CASES WHERE ACTUAL VALUES DEVIATE FROM THE SPECIFIED DIMENSIONS, THE DISPOSITION MUST INDICATE THE REQUIRED ACTION FOR EACH NON-CONFORMANCE IN THE APPROPRIATE COLUMN.

	(CIRCLE ALL OUT OF TOLERANCE DIMENSIONS)					DISPOSITION
					Insp Method	
13	(cont.)	⊥ .4646	.4664		TM	Re-submission Req
		⊥ .0002	.0026			
		⊥ .0002	.0009			
		⊥ .0006	.0054			" "
14	⏥ .003	.0004	.0007		Dial Ind	
15	.003 - .007 R	.015 R	.016 R		Unit Mic	" "
16	.012 - .015	.014	.014		Dial Ind	
17	.050 Ref.	.057	.056			
	Note #2	Maintained .160 throughout full length			Plug Gage	
18	// .0015 B	.0007	.0009		Dial Ind.	
19	.090 - .093	.091	.091			
20	.310 - .330	.315	.316			
21	Note #1	OK	OK		TM	
22	.034 - .041	.039	.034		Unit Mic	

REMARKS AND/OR INSTRUCTIONS:

13: Measured from inside cup.

DISPOSITION: TOOL APPROVED FOR PROD. | RESUBMISSION REQ'D

FG. ENG.: [signature] 2/20/91 | QRA ENG.:

PURCH. AGENT:

HIGHLIGHTS
Stephen B. Offler
Week Ending 02/01/91

OVERTIME: Jeff DiDomenico, 91-02-02, 4 hrs

FORD MY'92 ELECTRONIC SPEED CONTROL DEACTIVATE PS

HEXPORT: The tolerance relaxation report was apparently well-received at Ford. George Randall is very close to accepting the relaxed tolerance part. His primary concern now is that cost delta associated with 1512 vs. 1516 sm not charged to Engineering. Bruce Pease indicates that the Tier-1's should receive copies of the report as well. One concern Bruce had was that our testing was conducted with devices tightened to 1/6 turn (this minimum guideline is per an earlier conversation with Weatherhead). Bruce wished to correlate this to a torque value. A quick experiment on 3 devices showed 1/6 turn roughly corresponds to 5 ft-lbs. Bruce was pleased with this information, since typical torque values on these fittings are roughly 10-15 ft-lbs. Thus, we have demonstrated a good seal at torques well below those in actual use.

CUSTOMER ISSUES: Both Bruce and George have signed off the SREA's which allow us to remove the very tight terminal positional tolerance from the envelope prints. This resolves the last outstanding issue on the 57PS ISIR, clearing the path for full approval. I will be updating the envelope prints to remove this tolerance.

Prototype metric hexports for the Ford of Australia applications have been completed by Bld. 20's CNC lathe operation. They look dimensionally excellent. They have been sent to plating, and expected back mid-next week. This will allow us to build and ship the 25 customer samples by late next week.

77PS: The very first prototype 77PS devices have been built. These are supposedly NON-FUNCTIONAL samples, labelled as such, for Bendix. Actually, the devices are functional but have not had extensive testing yet. Jeff manually "calibrated" the devices; that is, he deformed the stationary terminal to obtain a dimension for which we have pins in stock. He also reports no significant differences between the 77 devices and corresponding 57 devices, in terms of pin window, snap sound, and actuation/release values.

Light Truck has requested 77PS samples, quantity 75, for shipment 91-02-22. We will be building more 77 switch assemblies soon for use in testing and for these samples, assuming all testing goes well.

Mechanization has approx. 40 switches in their possession for calibrator debug. Steve McCooey reports that first, they will be doing simple mechanical debug (basically ensuring that all geometry is correct) then moving to the heart of the matter, which is debug of the electrical aspects.

We have begun force-deflection type testing, which will be useful in understanding the nuances of calibration, and also to understand the impact of spring angle on forces which will help determine the range of adjustability needed for the spring forming tool.

DRAFTING: We are presently working to update 57PS component and subassembly drawings to include new dash numbers to cover the 57PSLS-2 and -3 switches. This effort is required prior to completion of the parts lists, which are underway.

TORQUE TEST: TEST 124-15-03 JAD 2-1-91

DEGREES	ELCO CNC PART	MODEL SHOP HIGH END	MODEL SHOP LOW END
45	8.3	3.3	2.9
60	14.2	5.0	4.2
90	19.6	9.2	7.9
135	31.7	14.6	10.4
180	36.3	26.3	12.9
225	45.8	27.9	14.6
270	47.5	30.4	17.5
315		33.8	19.2
360		39.6	21.3
405			25.0
450			25.0
495			25.0
540			25.0
585			25.0
FLUID PASSAGE	0.099 inches	0.092 inches	0.088 inches

—ELCO CNC PART BROKE OFF AT THE O-RING GLAND AT APPROX. 47.5 FT. LBS.
—LOW END MODEL SHOP PART BEGAN TO PUSH THE CENTERS OUT OF THE BRASS FEMALE J512 FITTING AT APPROX. 25 FT. LBS.
—HIGH END MODEL SHOP PART WAS ABORTED AT APPROX. 39.6 FT. LBS. BEFORE FAILURE OCCURED
—MODEL SHOP HEXPORTS USED IN THIS TEST CAN BE FOUND WITH TOLERANCE RELAXATION EXPERIMENT PARTS (TEST 117-07-16).

VALENTINE MTG.

MSG M#= 305742 FR=VAGS TO=SH2 SENT=02/06/91 10:47 AM
R#=176 ST=C DIV=0050 CC=00134 BY=VAGS AT=02/06/91 10:47 AM

D:	GEORGE LAVIDE	B512	VALENTINE
	STEVE OFFILER	SB01	
	JEANNE GENTES	ATOC	
	JOHN HAYNES	PCDA	
D:	BILL SWEET	WS50	
	STAN HOMOL	SH2	
R:	MATT SELLERS	PCME	

J: 27713-1 CUP / 74797 RING, TOOL APPROVAL ISSUES

WILL SUMMARIZE THE FINDINGS AT OUR FAI REVIEW WITH VALENTINE
ELOW. PLEASE ENSURE THAT VALENTINE REVIEWS THE ITEMS AND PREPARES
RESPONSE TO MYSELF AS SOON AS POSSIBLE. IT IS CRUCIAL THAT THESE
OOLS ARE PRODUCTION CAPABLE WITHIN THE NEXT FEW WEEKS.

4797-1 ALUMINUM CRIMP RING

HE ONLY DISCREPANCY WITH THIS TOOL IS THE IN SIDE RADIUS
PECIFIED AT .055/.065 R. T.I. FOUND THE RADIUS @ .050 R. HOWEVER
HE CENTRALIZATION OF THE CROSS SECTION WAS IN QUESTION. IT WAS
OTED THAT HAVING AN UN-CENTERED CROSS SECTION WOULD IN FACT SHOW
HE RADIUS HIGHER WHICH WOULD NOT PROVIDE AN EXPLANATION FOR THE
IGH READING.

.I. ACTIONS CONFORMING DIE (THINK: GAPLE WIRE)

OUNT/CROSS SECTION ADDITIONAL SAMPLE TO
ROVIDE PRECISE READING. GENTES UPCOMING

ALENTINE ACTIONS

EVIEW TOOLING. PROVIDE RESPONSE ON LEAD TIME
EQUIRED TO MAKE ADJUSTMENT IF NEEDED. VALENTINE 2/7

7713-1 CUP

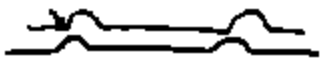

HE MAJORITY OF THE DISCREPANCIES FOUND WITH THE CUP "SEEM" TO BE
ELATED TO THE CONCENTRICITY BETWEEN THE TOP AND BOTTOM PUNCHES
HAT FORM THE .472/.468 RING. VISUAL OBSERVATION OF A CROSS
ECTIONED PART SEEMS TO INDICATE THAT THE RING IS BEING PUSHED
ORIZONTALLY TO SOME EXTENT TOWARD THE MIDDLE OF THE CUP. ANOTHER
RITICAL DIMENSION THAT IS OUT OF SPECIFICATION IS THE .005" MAX
. CALLOUT FOR INSIDE RADII. THEY WERE FOUND RUNNING .019 TO .015
. THIS IS A FUNCTIONAL SURFACE AND MUST BE MAINTAINED BELOW .005"
.

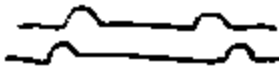

T SHOULD BE NOTED THAT THE Q.C. EQUIPMENT USED BY VALENTINE IS NOT
ET UP TO MEASURE GDT TOLERANCED PARTS AS ACCURATELY AS T.I. S.

TEM # 1

010" R. MAX 2 PLACES RUNNING .020" R.

AY BE RELATED TO CONCENTRICITY PROBLEM STATED ABOVE.

ALENTINE ACTION

EVIEW TOOLING. ADVISE ON REPAIR SCHEDULE. VALENTINE 2/11

TEM # 2

029/.032" R. RUNNING .025" (DRAWING MEASURE)

AY BE RELATED TO PROBLEM STATED ABOVE WITH CONCENTRICITY. DESIGN
AS INDICATED THIS WE MAY BE ABLE TO OPEN THE PRINT TO ALLOW A
HARPER RADIUS. HOWEVER, VALENTINE SHOULD REVIEW TOOLING ANYWAY.

.I. ACTION

VALUATE OPENING RADIUS SPEC. AND ADVISE. STEVE 2/11

ALENTINE ACTION

EVIEW TOOLING. ADVISE ON ADJUSTMENT CAPABILITY. VALENTINE 2/11

TEM # 3

OTE # 4 .045" MAX PINCH OFF RADIUS RUNNING .080" R. (DRAWING MEASURE)

OUND TO BE SUBJECTIVE IN MEASUREMENT METHOD. RADIUS AS IT EXIST
S THE SAME AS IS FOUND ON THE CURRENT 52 AND 57FS CUPS. NO
RIMPING DIFFICULTIES RELATED TO THIS EDGE CONDITION HAVE BEEN
OTED ON EITHER DEVICE. REVIEW OF THE PRINT CALLOUT WILL BE
ISCUSSED BETWEEN STAN, STEVE, AND MYSELF.

.I. ACTION

EVIEW PRINT CALL OUT. STEVE 2/11

ALENTINE ACTION

S THIS DIMENSION ADJUSTED AT ALL WHEN
HANGING BETWEEN 27298 AND 27713? VALENTINE 2/11

TEM # 4

005" R. MAX RUNNING .010/.015" R (DRAWING MEAS.)

ERVES AS A SEATING AREA FOR BOTH THE WASHER AND CONVERTER. MUST
E MAINTAINED AT THE .005" R. SPECIFICATION.

ALENTINE ACTION

EVIEW TOOLING. ADVISE ON REPAIR SCHEDULE. VALENTINE 2/11

TEM # 5

TI-NHTSA 001699

OSITIONAL TOLERANCE WAS ALSO FOUND OUT OF SPEC. THIS DIMENSION
UST BE TO SPEC. IT SERVES A VITAL FUNCTION WITH DEVICE DEFLATION.

ALENTINE ACTION

EVIEW TOOLING. ADVISE ON REPAIR CAPABILITY. [illegible]

TEM # 6

003/.007 R. RUNNING .015 R. CHANGE MAINT

ERVES AS A SEAL DEFORMATION SURFACE. IT IS QUESTIONABLE WHETHER
.015" R. WILL AFFECT THE SEALING FUNCTION. TO BE REVIEWED BY [illegible]
OWEVER, VALENTINE SHOULD REVIEW THE TOOLING IN PARALLEL.

.I. ACTION

VALUATE EFFECT ON SEALING FUNCTION. ADVISE. STEVE/MATT [illegible] IF NO SEAL CHG MAINT

ALENTINE ACTION

EVIEW TOOLING. ADVISE ON ADJUSTMENT CAPABILITY. VALENTINE [illegible]

WOULD LIKE TO MEET ON 2/11/90 AT 3:00PM IN BUILDING 12 CAFETERIA
O REVIEW COMPLETED ACTIONS. CALL IF YOU CANNOT ATTEND.

EORGE - PLEASE CLOSE WITH VALENTINE ON THIS MEETING.

EGARDS...MATT
1245

-MSG MB= 305742 FR=VAGS TO=PCOA SENT=[illegible]
R#=059 ST=C DIV=0050 CC=00134 BY=VAGS A[illegible]

TO: GEORGE LAVIOE R512 VALENTINE
STEVE OFFILER SB01
~~JEANNE GENTER~~ AT0C
JOHN HAYNES PCOA

CC: ~~BILL SWEET~~ WS60
STAN HOMOL SH2

FR: MATT SELLERS PCMF

SJ: 27713-1 CUP / 74797 RING, TOOL APPROVAL ISSUES

I WILL SUMMARIZE THE FINDINGS AT OUR FAI REVIEW WITH VALENTINE BELOW. PLEASE ENSURE THAT VALENTINE REVIEWS THE ITEMS AND PREPARES A RESPONSE TO MYSELF AS SOON AS POSSIBLE. IT IS CRUCIAL THAT THESE TOOLS ARE PRODUCTION CAPABLE WITHIN THE NEXT FEW WEEKS.

74797-1 ALUMINUM CRIMP RING

THE ONLY DISCREPANCY WITH THIS TOOL IS THE OUT SIDE RADIUS SPECIFIED AT .055/.065 R. T.I. FOUND THE RADIUS = .050 R. HOWEVER, THE CENTRALIZATION OF THE CROSS SECTION WAS IN QUESTION. IT WAS NOTED THAT HAVING AN UN-CENTERED CROSS SECTION WOULD IN FACT SKEW THE RADIUS HIGHER! WHICH WOULD NOT PROVIDE AN EXPLANATION FOR THE HIGH READING.

T.I. ACTIONS

MOUNT/CROSS SECTION ADDITIONAL SAMPLE TO PROVIDE PRECISE READING.

VALENTINE ACTIONS

REVIEW TOOLING. PROVIDE RESPONSE ON LEAD TIME REQUIRED TO MAKE ADJUSTMENT IF NEEDED

27713-1 CUP

THE MAJORITY OF THE DISCREPANCIES FOUND WITH THE CUP [illegible] RELATED TO THE CONCENTRICITY BETWEEN THE TOP AND [illegible] THAT FORM THE .4727/.468 RING. VISUAL INSPECTION [illegible] SECTIONED PART SEEMS TO INDICATE THAT THE RING IS [illegible] HORIZONTALLY TO SOME EXTENT TOWARD THE MIDDLE OF [illegible] CRITICAL DIMENSION THAT IS OUT OF SPECIFICATION IS THE [illegible] R. CALLOUT FOR INSIDE RADII. THEY WERE FOUND RUNNING [illegible] R. THIS IS A FUNCTIONAL SURFACE AND MUST BE MAINTAINED [illegible] R.

IT SHOULD BE NOTED THAT THE O.C. EQUIPMENT USED BY [illegible] SET UP TO MEASURE GDT TOLERANCED PARTS AS ACCURATELY [illegible]

ITEM # 1

.010" R. MAX 2 PLACES RUNNING .020" R.

MAY BE RELATED TO CONCENTRICITY PROBLEM STATED ABOVE.

VALENTINE ACTION

REVIEW TOOLING. ADVISE ON REPAIR SCHEDULE. [illegible]

ITEM # 2

.028/.032" R. RUNNING .025"

MAY BE RELATED TO PROBLEM STATED ABOVE WITH CONCENTRICITY. [illegible] HAS INDICATED THIS WE MAY BE ABLE TO OPEN THE PRINT TO ALLOW A SHARPER RADIUS. HOWEVER, VALENTINE SHOULD REVIEW TOOLING [illegible]

T.I. ACTION

EVALUATE OPENING RADIUS SPEC. AND ADVISE. STEVE [illegible]

VALENTINE ACTION

REVIEW TOOLING. ADVISE ON ADJUSTMENT CAPABILITY. VALENTINE [illegible]

ITEM # 3

NOTE # 4 .045" MAX PINCH OFF RADIUS RUNNI[illegible]

FOUND TO BE SUBJECTIVE IN MEASUREMENT [illegible]
IS THE SAME AS IS FOUND ON THE CONNECT[illegible]
CRIMPING DIFFICULTIES RELATED TO THI[illegible]
NOTED ON EITHER DEVICE. REVIEW OF THE [illegible]
DISCUSSED BETWEEN STAN, STEVE, AND [illegible].

T.I. ACTION

REVIEW PRINT CALL OUT.

VALENTINE ACTION

IS THIS DIMENSION ADJUSTED AT [illegible]
CHANGING BETWEEN [illegible]

ITEM # 4

.005" R. MAX RUNNING .010/.015" R

SERVES AS A SEATING AREA FOR BOTH [illegible]
BE MAINTAINED AT THE .005" R. SPECIFI[illegible]

VALENTINE ACTION

REVIEW TOOLING. ADVISE ON REPAIR SCHEDU[illegible]

ITEM # 5

.468/.472" RUNNING AS LOW AS .464"

POSITIONAL TOLERANCE WAS ALSO FOUND OUT OF SPEC, [illegible]
MUST BE TO SPEC. IT SERVES A VITAL FUNCTION [illegible]

VALENTINE ACTION

REVIEW TOOLING. ADVISE ON REPAIR SCHEDULE.

ITEM # 6

.003/.007 R. RUNNING .015 R.

SERVES AS A SEAL DEFORMATION SURFACE. IT IS [illegible]
A .015" R. WILL AFFECT THE SEALING FUNCTION. [illegible]
HOWEVER, VALENTINE SHOULD REVIEW THE TOOLING [illegible].

T.I. ACTION

EVALUATE EFFECT ON SEALING FUNCTION. ADVISE. STEVE [illegible]

VALENTINE ACTION

REVIEW TOOLING. ADVISE ON ADJUSTMENT [illegible]

[illegible]

I WOULD LIKE TO MEET ON 2/11/90 AT 3:00PM IN BUILDING [illegible]
TO REVIEW COMPLETED ACTIONS. CALL IF YOU CANNOT ATTEND.

GEORGE - PLEASE CLOSE WITH VALENTINE ON THIS MEETING.

REGARDS...MATT
X1245

HIGHLIGHTS
Stephen B. Offler
Week Ending 02/08/91

FORD MY'92 ELECTRONIC SPEED CONTROL DEACTIVATE PS

CUSTOMER ISSUES: George Randall has asked for new prints ASAP. He is accepting the new, relaxed J512 tolerances we proposed, 5.58 - 5.85mm (.2197" - .2303"). However, he wanted 5.60 and made a significant issue out of the 0.02mm (.0008") before finally agreeing, then only because Bruce Pease already had.

On the removal of the terminal position tolerance from the print, George misinterpreted the SREA we presented, assuming we meant removal of the true-position GDT callout and replacement with a conventional co-ordinate dimension. Our goal was to take the tolerance off and replace the basic with a reference dimension. This quickly became a major issue. George needed to know what new co-ordinate dimension was going to be used on the next prints. A statistical terminal position study on four different lots of production 57PS's showed our present capability is poor. The *better* terminal had a Cpk of 0.20. In other words, we are shipping production 57PS's every day that do not meet the customer print. I proposed a tolerance of 0.5mm +/- 0.5, five times the present tolerance. George strongly refused this. Our negotiations finally stalled at 0.5mm +/- 0.2, which is the tolerance George's new print will carry. We must now spend effort to attempt to improve the 57PS staking process.

SAMPLES: The 20 Ford of Australia devices shipped Thursday 02-07. They used custom CNC lathe metric hexports using M10x1.25 thread and 14mm hex. They used O-rings rather than J512, using this opportunity to steer them towards O-rings. We included complete information on the J514 O-ring gland details, the O-rings themselves, and brake-fluid compatible materials, all from the Parker O-Ring Handbook. We also included a copy of the Engineering Specification, a set of mating connectors, and a cover letter.

George Randall indicates that he needed/expected his 75 77PS samples before 91-02-22 which is the date on our paperwork. He has very few 57PS's on the shelf, and stock builds are ongoing. We must first do an Impulse test to validate this latest iteration of the prototype switch assembly. This in turn requires that we "mock-calibrate" the hexes; that is, as-built uncalibrated they need very short pins, out of range, so we must deform the stationary terminal to roughly its midpoint so they can be pinned traditionally. I have contacted Wayne Cudson, who indicates the calibrator *is* at a stage where he can bend to some pre-determined value. *It is not* capable of a true calibration yet. We plan to mock-calibrate about 108 hexes, do an Impulse test ASAP on 12, and use about 10 of the remaining to build expedited parts for George. These will ship after successful completion of the Impulse test, possibly as early as next Thursday. Subsequently we will build and ship the remaining 65 well ahead of the 02-22 date.

HEXPORT: I have received data generated by Hiro, using their version of the ball-gaging method. They included data using two different ball sizes as well as optical TM measurements. I have begun to analyze this data, and preliminarily it looks like their angles were off, my calculations on their data showing 40.75 degrees (spec 42 +/- 1). Also, correlation with the TM readings is not very good. TM readings of the chamfer diameter are always lower than the ball readings, by an average of .0042" with SD of .0012". However, we know the difficulties in using optical measurements, and I still tend to trust the ball readings.

TEXAS
INSTRUMENTS

DIMENSIONAL ANALYSIS ON PART NUMBER

[illegible]

	BLUEPRINT SPEC	CAVITY # 10 ACTUAL	CAVITY # 20 ACTUAL	CAVITY # 30 ACTUAL	CAVITY # 40 ACTUAL	CAVITY # 50 ACTUAL	CAVITY # 60 ACTUAL	COMMENTS
1	15.45 - 15.8[illegible]	15.55	15.6[illegible]	[illegible]	[illegible]	[illegible]	[illegible]	
2	16.56 - 16.76	16.57/16.58	16.62/16.64	[illegible]	16.58/16.59	16.58/16.58	[illegible]	
3	12.50 - 13.21	12.978	12.951	12.975	13.143	13.074	12.946	
4	11.[illegible] - 11.90	11.788	11.806	11.775	11.777	11.798	11.788	
	2.84 - 3.05	2.93	2.92	[illegible]	[illegible]	[illegible]	[illegible]	
	[illegible]	1.359/0.041	1.420/0.020	[illegible]	[illegible]	[illegible]	1.387/0.013	
6	11.50 - 11.92	11.69/11.71	11.67/11.71	11.72/11.[illegible]	11.60/11.63	11.62/11.67	11.65/11.65	
7	1.24 - 1.45	1.252	1.250	1.230	1.239	[illegible]	[illegible]	
8	1.24 - 1.55	[illegible]	1.297	[illegible]	1.289	[illegible]	[illegible]	
9	1.85 - 2.06	2.004	1.974	1.996	1.994	1.994	1.996	
10	12.45 - 12.65	12.772	12.591	[illegible]	12.556	[illegible]	[illegible]	
11	[illegible]	[illegible]	[illegible]	[illegible]	[illegible]	[illegible]	[illegible]	
12	2.77 - 3.[illegible]	2.99/2.99	2.90/2.9[illegible]	2.90/2.9[illegible]	[illegible]	[illegible]	[illegible]	
13	0.25 - 0.75	0.506/0.241	0.490/0.800	0.442/0.972	[illegible]	[illegible]/0.784	[illegible]/0.757	OUT OF SPEC.
14	0.05 - 0.25	0.051/0.069	0.074/0.127	[illegible]	0.127/0.125	0.135/0.[illegible]	[illegible]	
		0.140/0.147	0.092/0.389	[illegible]/0.114	0.048/0.061	0.038/0.083	0.137/0.159	
15	[illegible] MAX	18.64	18.56/18.57	18.60/18.54	18.6[illegible]/18.6[illegible]	18.77/18.[illegible]	18.71/18.51 18.67	

TEXAS INSTRUMENTS

DIMENSIONAL ANALYSIS ON PART NUMBER

[illegible]

	DIMENSION SPEC	CAVITY # [illegible] ACTUAL	CAVITY # 32 ACTUAL	CAVITY # 32 ACTUAL	CAVITY # 48 ACTUAL	CAVITY # 50 ACTUAL	CAVITY # [illegible] ACTUAL	COMMENTS
[illegible]	[illegible] MAX	[illegible]	[illegible]	[illegible]	[illegible]	[illegible]	[illegible]	
7	[illegible]	[illegible]	[illegible]	[illegible]	[illegible]	[illegible]	[illegible]	
8	[illegible]	[illegible]	[illegible]	[illegible]	[illegible]	[illegible]	[illegible]	
9	[illegible] MAX	[illegible]	[illegible]	[illegible]	[illegible]	[illegible]	[illegible]	
10	[illegible]	[illegible]	[illegible]	[illegible]	[illegible]	[illegible]	[illegible]	OUT OF SPEC.
	[illegible] MIN	[illegible]	[illegible]	[illegible]	[illegible]	[illegible]	[illegible]	
11	[illegible]	[illegible]	[illegible]	[illegible]	[illegible]	[illegible]	[illegible]	
12	[illegible]	[illegible]	[illegible]	[illegible]	[illegible]	[illegible]	[illegible]	
13	[illegible]	[illegible]	[illegible]	[illegible]	[illegible]	[illegible]	[illegible]	
14	[illegible]	[illegible]	[illegible]	[illegible]	[illegible]	[illegible]	[illegible]	
14A	[illegible]	[illegible]	[illegible]	MEASURED	ON A CROSS	SECTIONED	PART	
		[illegible]	[illegible]					
15	[illegible]	[illegible]	[illegible]	[illegible]	[illegible]	[illegible]	[illegible]	
16	[illegible]	[illegible]	[illegible]	[illegible]	[illegible]	[illegible]	[illegible]	
[illegible]	NO FLASH OR	OK	OK	FLASH	OK	OK	FLASH	
	BURRS ALLOWED							
	ON SURFACE							
17	[illegible]	[illegible]	[illegible]	[illegible]	[illegible]	[illegible]	[illegible]	
18	[illegible]	[illegible]	[illegible]	[illegible]	[illegible]	[illegible]	[illegible]	

TEXAS INSTRUMENTS INCORPORATED • [illegible] • ATTLEBORO, MASSACHUSETTS
[illegible] • TELEX [illegible] • CABLE [illegible]

TEXAS INSTRUMENTS

DIMENSIONAL ANALYSIS ON PART NUMBER

[illegible]

	BLUEPRINT SPEC	CAVITY # 18 ACTUAL	CAVITY # 22 ACTUAL	CAVITY # [illegible] ACTUAL	CAVITY # 42 ACTUAL	CAVITY # 50 ACTUAL	CAVITY # 61 ACTUAL	COMMENTS
DSA	STAMP DATE	INVERTED	DELTA	OMITTED.	HAS SINCE	BEEN	INCLUDED	
	CODE & PARTS	IN CODING	OPERATION.					
[illegible]	[illegible]	N/A THREADS	HAVE BEEN	ADDED				
	90DEG CHAMFER							
10	3/8-24UNF-2B	OK	[illegible]	OK	OK	OK	OK	
[illegible]	1.19-1.40	[illegible]	MEASURED	ON A CROSS	SECTIONED	PART		
12	[illegible]	[illegible]	[illegible]	[illegible]	[illegible]	[illegible]	[illegible]	
13	2.5 [illegible]	OK	MEASURED	ON A CROSS	SECTIONED	PART		
14	41DEG - 43DEG	41DEG 21MIN	MEASURED	ON A CROSS	SECTIONED	PART		
15	40-50DEG CHAMF	N/A THREADS	HAVE BEEN	ADDED				
16	32.51 MAX	31.64 31.62	31.46 31.48	31.45 31.46	31.50 31.47	31.46 31.48	31.50 31.53	
17	14.02-14.53REF	14.11	14.11	14.11/14.12	14.11/14.12	14.12/14.12	14.11 14.12	
18	3.30-3.60	3.45 - 3.44	3.45 - 3.43	3.45 - 3.42	3.45 - 3.44	3.44 - 3.47	3.45 - 3.45	
19	7.23-7.37	7.27 7.28	7.35 7.32	[illegible]	[illegible]	[illegible]	7.37 7.37	
20	5.59-5.85	5.61 5.68	5.72-5.68	[illegible]	[illegible]	[illegible]	[illegible]	
21	71.30DEG +/-	72DEG 30MIN	72DEG 11MIN	72DEG 13MIN	72DEG 24MIN	71DEG 54MIN	72DEG 10MIN	
	1DEG 2X	72DEG 30MIN	72DEG 14MIN	72DEG 5MIN	72DEG 17MIN	72DEG 11MIN	72DEG 34MIN	

TEXAS INSTRUMENTS INCORPORATED • 34 FOREST STREET • ATTLEBORO MA 02703
[illegible] • TELEX [illegible] • CABLE [illegible]

TEXAS INSTRUMENTS

DIMENSIONAL [illegible] IN PART [illegible]

[illegible]

	BLUEPRINT SPEC	CAVITY # 1 ACTUAL	CAVITY # 2 ACTUAL	CAVITY # 3 ACTUAL	CAVITY # 4 ACTUAL	CAVITY # 5 ACTUAL	CAVITY # 6 ACTUAL	COMMENTS
#2	[illegible]	[illegible]	[illegible]	[illegible]	[illegible]	[illegible]	[illegible]	
#3	[illegible]	[illegible]	[illegible]	[illegible]	[illegible]	[illegible]	[illegible]	
		[illegible]	[illegible]	[illegible]	[illegible]	[illegible]	[illegible]	
#4	[illegible]	[illegible]	[illegible]	[illegible]	[illegible]	[illegible]	[illegible]	
#5	[illegible]	[illegible]	[illegible]	[illegible]	[illegible]	[illegible]	[illegible]	[illegible] OF SPEC
#6	[illegible]	[illegible]	[illegible]	[illegible]	[illegible]	[illegible]	[illegible]	
		[illegible]	[illegible]	[illegible]	[illegible]	[illegible]	[illegible]	
#7	[illegible]	[illegible]	[illegible]	[illegible]	[illegible]	[illegible]	[illegible]	
#8	[illegible]	[illegible]	[illegible]	[illegible]	[illegible]	[illegible]	[illegible]	
		[illegible]	[illegible]	[illegible]	[illegible]	[illegible]	[illegible]	
		[illegible]	[illegible]	[illegible]	[illegible]	[illegible]	[illegible]	
		[illegible]	[illegible]	[illegible]	[illegible]	[illegible]	[illegible]	
#9	[illegible]	[illegible]	[illegible]	[illegible]	[illegible]	[illegible]	[illegible]	
		[illegible]	[illegible]	[illegible]	[illegible]	[illegible]	[illegible]	
#9	[illegible]	[illegible]	[illegible]	[illegible]	[illegible]	[illegible]	[illegible]	
		[illegible]	[illegible]	[illegible]	[illegible]	[illegible]	[illegible]	

TEXAS INSTRUMENTS INCORPORATED • [illegible] FOREST STREET • ATTLEBORO MA [illegible]
[illegible] • TELEX [illegible] • CABLE TEXAS

TEXAS INSTRUMENTS

DIMENSIONAL ANALYSIS ON PART NUMBER

F2VC-[illegible]

	BLUEPRINT SPEC	CAVITY # 1B ACTUAL	CAVITY # 2C ACTUAL	CAVITY # 3C ACTUAL	CAVITY # 4D ACTUAL	CAVITY # 5D ACTUAL	CAVITY # 6D ACTUAL	COMMENTS
51	2.59-2.80 IN	2.725	2.710	2.703	2.713	2.710	2.733	
	0.2 m A C	2.593	2.499	2.578	2.482	2.457	[illegible]	
	0	0.072	0.034	[illegible]	[illegible]	[illegible]	[illegible]	
	2.59-2.80 IN	2.695	2.703	2.715	2.703	2.695	2.712	
	0.2 m A C	2.499	2.522	2.380	2.377	2.427	2.445	
	0	0.034	0.057	[illegible]	0.084	0.038	[illegible]	
52	13-19DEG IN	17DEG 23MIN	MEASURED	ON A CROSS	SECTIONED	PART		
		17DEG 49MIN	MEASURED	ON A CROSS	SECTIONED	PART		OUT OF SPEC +49MIN
53	0.66-0.87	0.725	MEASURED	ON A CROSS	SECTIONED	PART		
54	0.10-0.31	0.262	MEASURED	ON A CROSS	SECTIONED	PART		
55	0.59-0.66	0.632	MEASURED	ON A CROSS	SECTIONED	PART		

TEXAS INSTRUMENTS INCORPORATED • 34 FOREST STREET • ATTLEBORO MA 02703
508-699-3000 • TELEX 94 7108 TWX 710-348-0696 • CABLE TEXAS

-MSG #= 378314 FR=PCQA TO=PCQA SENT=02/11/91 07:43 AM
R#=163 ST=C DIV=0050 CC=00149 BY=CERN AT=02/08/91 03:27 PM

FEBRUARY 08, 1991

TO:	RUSTY STRUBEL	JMLS	CC:	TOM CHARBONEAU	TC
	MIKE DeMATTIA	PCQA		JOHN KOURTEMIS	MDES
	CHARLIE DOUGLAS	CPPC		STEVE MAJOR	WHLZ
	DICK GARIEPY	MFPC		ANDY McGUIRK	PCQA
	PAUL KOTCH	PRK1		ED O'NEILL	EJON
	JOE LAZARZ	JMLS		JOE SCHUCK	WHLI
	STEVE OFFILER	SBO1		GARY SNYDER	CPPC
	MATT SELLERS	PCME		MARTHA SULLIVAN	CPPC
	BILL SWEET	PCME		RAY TOURANGEAU	PCME
	GEORGE LAVOIE	B512		TED BALLARD	AVME
	JOHN HAYNES	PCQA		DAVE VARNEY	PORM
				SCOTT MARTIN	MFPC
				CLAIRE BALTHAZAR	MFPC
				BILL CONGDON	MFPC
FR:	DAVE CZARN	ZARN			

SJ: FORD CRUISE CONTROL PRESSURE SWITCH START-UP MEETING:
02/08/91 MEETING MINUTES

MEETING

THE NEXT MEETING IS SCHEDULED FOR

DATE: 02/14 (THURSDAY)
TIME: 10:00-11:30 AM
PLACE: MARKETING CONFERENCE ROOM

PLEASE CALL ME IF YOU ARE NOT ABLE TO ATTEND

* = NEW OR REVISED ITEMS

57 L/T	WHO	WHEN	
Hexport:			
* ELCO APPROVAL OF GAGE CONCEPT	KOTCH	02/04	ORIG.
		02/04	COMP.
* FINAL GAGE REVIEW	SELLERS/	02/05	ORIG.
	OFFILER	02/14	REV.
* RELEASE GAGE FOR BUILD	SELLERS	02/07	ORIG.
		02/14	REV.
. ELCO CONTROL PLAN	KOTCH	01/17	ORIG.
(DELAYED DUE TO J512 GAGING DEFINITION)		02/28	REV.
* RELEASE PRODUCTION HEXPORT (L/T)	SELLERS	02/08	ORIG.
		02/01	COMP.
. ISIR corrective actions:			
* A. TERMINAL DIMENSIONS			
- M.C. STUDIES FROM AJ KNOTT	KOTCH	01/04	ORIG.
		02/14	REV.
. DISC LIFE TEST FROM EACH LOT	OFFILER/	02/14	
	GARIEPY		
* L/T PILOT RUN	SELLERS/	01/24	ORIG.
	GARIEPY	03/18	REV.
. CREATE L/T EIS PARTS LIST	OFFILER/	01/24	ORIG.

AND B.O.M. (ORIG. DATE WAS INCORRECT)	WILSON	03/07	REV.

37 P/C

* OFFSET POLARITY KEY BASE PRINT	OFFILER	11/16	ORIG.
		02/14	REV.
* P/C PILOT RUN	SELLERS/	01/31	ORIG.
	GARIEPY	03/18	REV.
* CREATE P/C EIS PARTS LIST	OFFILER/	01/24	ORIG.
AND B.O.M.	WILSON	02/14	REV.
* RELEASE P/C HEXPORT (P/N 36900)	SELLERS/	01/31	ORIG.
	KOTCH	02/04	REV.
		02/05	COMP.
* ESTABLISH LEADTIME FOR HEXPORT	KOTCH	01/31	ORIG.
		02/01	REV.
		02/07	COMP.
. ENV. DWG. WITH NO TERM. POS'N TOLERANCE	OFFILER	02/28	

77PS

. DESIGN UPDATE	OFFILER	ONGOING	
. MFG/MECH UPDATE	SELLERS	ONGOING	
. REPORT ON TOKICO P.S. RESPONSIBILITY	DOUGLAS	ONGOING	
. DESIGN FMEA -START	OFFILER	02/12	
-COMPLETE		04/18	
* BEGIN CALIBRATOR EVALUATION	SELLERS	02/04	ORIG.
		02/04	COMP.
. PROD. LINE LAYOUT	SELLERS	03/14	
. PROD. LINE SET-UP (RTE CARDS, ETC)	BALTHAZAR	TBD	
* PROVIDE DATES FOR COMPLETION OF ABOVE	BALTHAZAR	02/21	
* PROVIDE QUALITY RELATED CRITICAL PATH	HAYNES	02/21	
ITEMS TO TRACK AT S/U MTGS.			
* RESOLVE BASE DELIV. SCHED. W/APCC	SELLERS	02/07	ORIG.
		02/07	COMP.
* ORDER ADD'L M.S. TERM'S AND SPRINGS	OFFILER	02/07	ORIG.
		02/11	REV.
* PROVIDE DATES FOR COMP. OF 1ST PASS	OFFILER	02/07	ORIG.
SPRING/CONTACT/PIN WINDOW TESTING		02/14	COMP.
. DETERMINE IF CLEARANCE SHOULD BE ADDED	OFFILER	02/14	
FOR MOV. ARM IN THE BASE			

IQP'S:

* ALUMINUM CRIMP RING	SELLERS	01/31	ORIG.
		02/08	COMP.
* REBUMP CUP	SELLERS	02/21	ORIG.
		02/08	COMP.
* MOVABLE TERM.	SELLERS	02/21	ORIG.
		02/08	COMP.
* STATIONARY TERM.	SELLERS	03/15	ORIG.
		02/08	COMP.
. BASE	SELLERS	02/28	

PRODUCTION COMPONENTS:

. ALUMINUM CRIMP RING	LAVOIE	02/11	
. REBUMP CUP	LAVOIE	02/27	
. MOVABLE TERM.	LAVOIE	03/01	
. STATIONARY TERM.	LAVOIE	03/22	
* BASE	SELLERS	03/06	ORIG.
(APCC DELIV. DATE PUSH-OUT)		03/15	REV.
* HEXPORT (P/N 36900)	KOTCH	03/04	

(ORIG. DATE INCORRECT)

MANUFACTURING EQUIPMENT:

. FINAL ASM MACHINE BUILD COMPLETION	SELLERS/ KOURTESIS	04/15
. BASE ASM MACHINE BUILD COMPLETION	SELLERS/ KOURTESIS	05/31
* PRESSURE TESTER BUILD COMPLETION (ORIG. DATE INCORRECT)	SELLERS/ KOURTESIS	06/06

FORD AUSTRALIA

. FORD AUSTRALIA UPDATE	DOUGLAS	ONGOING	
. SAMPLES FOR VP BUILD	OFFILER	01/17	ORIG.
		02/08	REV.
		02/08	COMP.

DISCUSSION

57 L/T AND P/C

.

WE'VE RECEIVED APPROVAL FOR THE RELAXED TOLERANCE J512 FROM BOTH L/T AND P/C! WE ARE WORKING TO QUICKLY PROVIDE REVISED PRINTS TO CEMENT THE DECISION. THESE PRINTS WILL CARRY A REVISED TERMINAL POSITIONAL TOLERANCE AS DESCRIBED BELOW.

.

L/T HAS REVERSED THEIR DECISION TO REMOVE THE TERMINAL POSITIONAL TOLERANCE FROM THE PRINT. GEORGE RANDALL HAS CONCEDED TO INCREASE THE TOLERANCE FROM +/-.004" TO +/-.008"; HOWEVER, THE CURRENT PROCESS IS CAPABLE TO +/-.020" AT BEST. WE NEED TO MOVE QUICKLY TO IMPROVE OUR CAPABILITY - EITHER BY PROCESS OR POST-STAKE ALIGNMENT - IN ORDER TO SECURE FULL ISIR APPROVAL FOR THE 57PS.

.

TDR'S J512 GAGE CONCEPT DRAWING HAS BEEN APPROVED BY ELCO. THEY'VE AGREED TO PAY $3200 FOR 1 GAGE; 2 GAGES WILL BE RELEASED NEXT WEEK AFTER A FINAL REVIEW AT TDR.

.

ELCO HAS PROVIDED A DELIVERY SCHEDULE THAT WILL MEET OUR NEEDS FOR START-UP. 5000 HEXPORTS (RELAXED TOLERANCE P/N 36900) WILL BE DELIVERED BY 08/04; 45000 MORE WILL BE COMPLETED BY 08/05. ALL PARTS WILL BE FULLY PRODUCTION REPRESENTATIVE, MADE ON THE CHUCKER. PER PAUL'S DISCUSSION WITH ELCO, THEY ARE TAKING NO EXCEPTIONS TO THE 36900 PRINT.

.

77PS

.

PRODUCTION INTENT SWITCHES WERE CALIBRATED TODAY USING THEPRODUCTION CALIBRATOR . THE RESULTS OF THE FIRST PASS WERE ENCOURAGING, IN TERMS OF REPEATABILITY OF THE SET CONTACT HEIGHT.

.

THE PRESSURE TESTER COMPLETION DATE HAS BEEN PUSHED OUT BY 3 WEEKS ACCORDING TO MECHANIZATION'S LATEST UPDATE; JOHN K. WILL ATTEMPT TO BRING THIS BACK ON SCHEDULE. (IT WAS INCORRECTLY REPORTED IN LAST WEEK'S MINUTES THAT THE BASE ASM. MACHINE WAS PUSHED OUT.)

.

THE P/C AND L/T PILOT RUNS ARE RESCHEDULED FOR MID-MARCH, TO ALLOW FOR USE OF PRODUCTION HEXPORTS.

.

BASSLER IS CURRENTLY STAMPING INITIAL PARTS OFF THE MOVABLE

TERMINAL TOOL.

FAI REVIEW OF CRIMP RING AND CUP (VALENTINE) DETERMINED AN OUT-OF-SPEC RADIUS AT THE BASE OF THE RING, AN IRREGULARLY FORMED SUPPORT BUMP IN THE CUP, AND SOME CORRELATION ISSUES. A FOLLOW UP MEETING WITH VALENTINE IS SCHEDULED FOR MONDAY.

MILESTONES	PLANNED	ACTUAL
57 L/T ISIR	11/21/90	11/21/90
57 L/T JOB 1	07/01/91	
57 P/C ISIR	01/15/91	01/15/91
57 P/C JOB 1	06/03/91	
77PS ISIR	08/01/91	
77PS SOP (TI)	09/01/91	

PRODUCTION PLAN BY MONTH (THOUSANDS)

	P/C 57PSL5-3	L/T 57PSL5-2	P/C 77PSL2-1	L/T 77PSL2-2
FEB	0	0	0	0
MAR	5	0	0	0
APR	5	0	0	0
MAY	10	3	0	0
JUN	*17	4	0	0
JUL	17	*5	0	0
AUG	17	7	4	0
SEP	17	7	10	0
OCT	0	7	**12	5
NOV	0	7	17	7
DEC	0	0	17	**7

NOTE: PLAN FOR AUGUST AND BEYOND IS TENTATIVE.
* = JOB1 FOR 57PS VERSIONS
** = TENTATIVE JOB1 FOR 77PS VERSIONS

REGARDS,
DAVE CZARN \10-FORD

TEXAS INSTRUMENTS

ATTLEBORO MASSACHUSETTS 02703

PAGE 1 OF

SAMPLE REPORT

REASON FOR REPORT		VENDOR		P.O.	PART NO.	REV
NEW PART		T.I. Model Shop			27713-1	A
REPLACEMENT TOOL.		REPORT REQ. BY	DATE	INSPECTED BY		DATE
CORRECTED TOOL.		M. Sellers	2/13/91	Jeanne Gentes		2/27/
REPAIRED TOOL.						
REVIEW						
OTHER Eng. Evaluation	✓					

THE DIMENSIONS INDICATED BELOW REPRESENT TEXAS INSTRUMENTS' FINDINGS REGARDING THE ACTUAL VALUES FOR ALL CHARACTERISTICS MEASURED. IN CASES WHERE ACTUAL VALUES DEVIATE FROM THE SPECIFIED DIMENSIONS, THE DISPOSITION MUST INDICATE THE REQUIRED ACTION FOR EACH NON-CONFORMANCE IN THE APPROPRIATE COLUMN.

	(CIRCLE ALL OUT OF TOLERANCE DIMENSIONS)					DISPOSITION		
					Insp. Method			
1	.003 - .007 R	.007R			Hardman Mfg.			
2	.005 R max.	.007R	(inside) .011	(outside)	"			
3	Note # 4 .016R max.	.110R			T.M.			
4	.028 - .032 R	.050R			"			
5	.010 R max.	.005R	(outside)		Hardman Mfg.			
	(2 pl.)	.005R	(inside)		"			

Note: .0019 wide rib around the .028-.032R rib inside and outside of the cup.

Dimension 1: This radius is deeply indented into the surface.

.0017-.0018 step around the ID of the .028-.032 R rib inside the cup.

REMARKS AND/OR INSTRUCTIONS:

DISPOSITION: TOOL APPROVED FOR PROD. | RESUBMISSION REQ'D

MFG. ENG.: | QRA ENG.:

PURCH. AGENT:

FORM T. 8734

TI-NHTSA 001705

27713 →

R.010 MAX @ BASE OF RAMP

CHM TO FILLET MAX .003

→ APPLY NEXT ITERATION

.028 - .032 R ; DOWN TO .026 ?? CHK M/S PART

27713 talk to Jeanne about ⌖ .003

VERY HARD TO MEASURE

VALENTINE ACTIONS

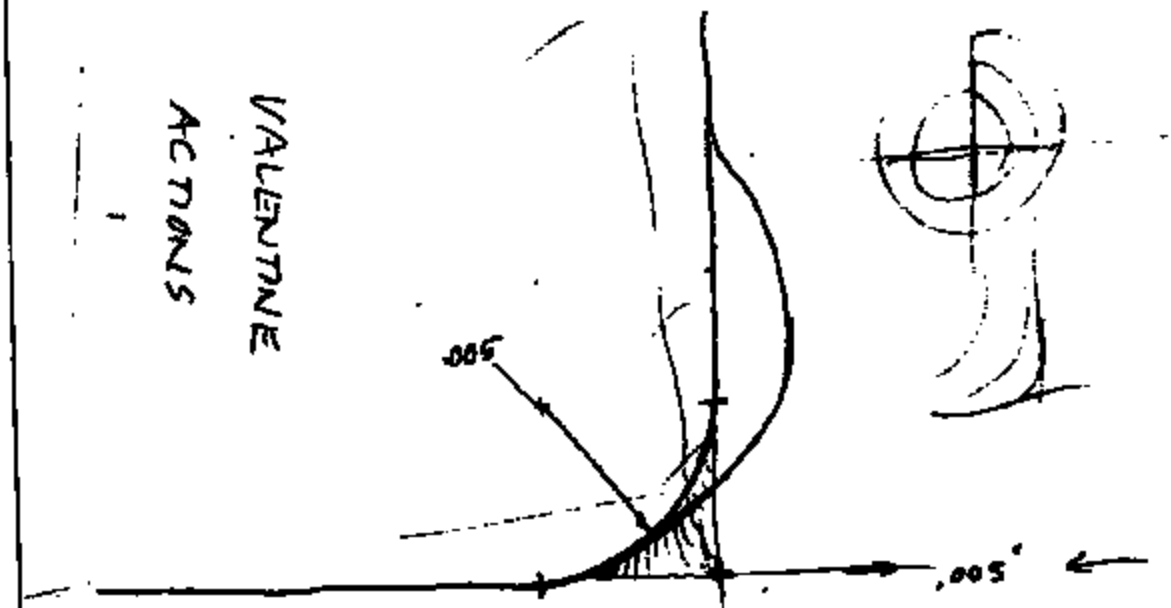

PINCH-OFF → NOTE: "PINCH-OFF RADIUS ALLOWED" NO MEAS.

PRESSURE SWITCH DATA Form 21605 TEST NO. 122-09-20

DEVICE	DATE REQUESTED	REQUESTED BY	REQUESTED COMP. DATE
E23413	2-14-91	Steve Offiler	

PERFORMED BY	DATE STARTED	DATE COMPLETED	APPROVED BY
Jeff DiDonato	1-28-91	2/15/91	

PROJECT TITLE: Cruise control Pressure Switch

CUSTOMER:

PURPOSE OF TEST: Disc life test of both PC and LT, both .012" pressurized and .012" non-pressurized.

PROCEDURE: Next Page

Device #	Material	Disc Act/Rel	Initial Act/Rel	Post Press Act/Rel	8.5E6 # cycles Act Rel			
122-09-01	.0122	304/102	109/47	103/50	20.2/10.2			
02	.0122	301/103	111/55	102/57	21.3/10.8			
03	.0122	303/103	110/62	102/61	20.7/10.5			
04	.0122	301/103	100/67	100/65	20.5/10.7			
05	.0122	301/103	102/66	102/65	20.8/10.1			
122-09-06	.0122	303/103	120/73	113/73	23.7/10.1			
07	.0122	301/104	120/62	120/66	22.3/10.5			
08	.0122	304/103	122/73	116/73	23.0/10.9			
09	.0122	304/103	123/82	116/69	20.7/10.7			
10	.0122	304/103	120/76	120/76	20.6/10.9	Passed		
122-09-11	.0122	304/103	262/112	266/104	19.1/10.7			
12	.0122	304/103	266/112	261/111	19.0/10.4			
13	.0122	304/103	272/113	269/115	20.7/10.8			
14	.0122	304/103	260/112	260/104	20.7/10.0			
15	.0122	304/103	258/112	262/113	19.7/10.9			
122-09-16	.0122	304/103	276/114	269/114	20.7/10.1			
17	.0122	304/103	268/111	268/111	20.1/10.5			
18	.0122	303/103	268/103	268/100	20.1/10.1			
19	.0122	304/103	278/108	265/102	Power Drive Problem			
20	.0122	304/103	291/104	268/102	20.6/10.1			

TI-NHTSA 001707

-MSG M#= 66425 FR=SBO1 TO=PCQA SENT=02/15/91 06:44 AM
R#=177 ST=C DIV=0050 CC=00101 BY=SBO1 AT=02/15/91 06:44 AM

TO:	Dave Czarn	ZARN	CC:	Mike DeMattia	PCQA
	John Haynes	PCQA		Charlie Douglas	CPPC
				Matt Sellers	PCME

FR: Steve Offiler SBO1

SJ: 77PS Design FMEA

The purpose of this memo is to explain in greater detail the recent schedule slip on the FMEA start date. According to previously agreed upon dates, the meetings were supposed to start up on Tuesday 91-02-12. They did not.

Today's highlights (91-02-15) will explain the activities given highest priority recently.

Items planned to receive highest priority in the coming few days include:

** Final emergency iteration to the 77PS spring (36889). Results of two recent calibration runs show this to be necessary. Steve N. indicates this late change will waste Eastern Automation design time, but fortunately nothing is in steel yet. Furthermore, the model shop is about to produce another 200 springs for us.

** Clean up myriad of details to finalize all production component prints and subassembly dwgs. to allow creation of parts lists.

** 77PS planning and creation of a detailed schedule.

I'd like to begin work on the DFMEA after the above are completed. I propose that the first meeting take place on Tuesday, 91-02-26, time and place T-B-D. The end date originally given of 91-04-18 will not change at this point.

Regards,
Steve O.

HIGHLIGHTS
Stephen B. Offiler
Week Ending 02/15/91

FORD MY'92 ELECTRONIC SPEED CONTROL DEACTIVATE PS

CUSTOMER ISSUES: I have forwarded finalized envelope prints to George Randell, including the relaxed J512 tolerance and the widened terminal position tolerance. We also owe Bruce Pease new prints. His already carry the relaxed J512, so it is just a matter of the terminal position tolerance. These are planned within the next couple of weeks; Bruce is not indicating a priority is needed.

We're communicating with Tera Kuzume of TII regarding Tokico. Tokico inquired about 57PSLS-2, but we are steering them directly to 77PSL2-3 given their rough schedule which shows SOP 3Q92. Charlie has sent them envelope drawings. Tokico has expressed a concern about zinc plating on the hexport, citing galvanic corrosion. The material of their mating part is an aluminum/copper alloy according to TII. Tokico has suggested nickel plate as their preferred hexport finish. They'd like prototypes with nickel plate in four weeks. We have not formulated a response on this yet.

Charlie has received advance notice from Ford for Phase II production switches (Light Truck 57PSLS-2). They need 19 thru the end of March and and additional 106 thru the end of April. These must be built on production equipment.

We have shipped twelve 77PSL2-3 (Rev "A", right J512) samples to George Randell on a priority basis against his order for 75. These are the first fully functional 77PS devices shipped. They use bases calibrated on the Mechanization calibrator. To confirm that nothing would go wrong with these first-pass 77PS calibrated switch assemblies, we did a full Impulse test including 25K powered cycles before samples shipped. All devices passed. We are now preparing the balance of 63.

77PS: We have run two trial lots of 77PS switch assemblies on the Mechanization calibrator. The first lot of 100 is being used for customer samples and in-house testing. A geometry problem was resulting in the calibrator deforming the spring arms, but luckily the calibration operation was still successful and the parts easily passed life testing. The calibrator has been modified, and the second trial run showed no spring deformation. However, there is now a problem with our spring/movable terminal geometry. This problem was originally masked because the calibrator was deforming the spring. The second lot, which was run on 25 parts to collect measurement statistics, has shown that the end of the spring which rivets to the movable terminal is too high. This forces the calibrator to deflect the stationary terminal excessively in order to get the t-pin bump to the desired height, and leaves the spring arm at an acute angle at contact transfer rather than perpendicular as intended. Further analysis is required to determine if the rivet hole in the spring or the movable terminal is out of position, and to correct the situation. This will receive high priority because it has immediate impact on Eastern Automation's program.

PRODUCTION COMPONENTS/ISSUES: We met with representatives of Valeriano to discuss discrepancies on FAI's of the relaxup cup 27713 and the aluminum crimp ring 74797. All issues should be rectified using three approaches: Valeriano is reworking the tools, we are refining the prints, and we are resolving differences in measuring techniques.

We visited TDP to tour their facility and discuss details of the J512 ball gage fixture. I have calculated ..e ideal ball sizes, and done some work to show correlation of this

technique relative to known "standards", using the chamfer blocks Mac had built up originally for the optical gage R&R. My results look promising. We explained the concept of gage R&R to TDR, and expect that they will be supportive if R&R problems arise

We have completed a disc lifetest on production-intent discs using productive equipment. We ran .0122" passivated and .013" non-passivated in Pass-Car and Light-Truck ranges. No failures turned up. Free-disc characterizations pre- and post-test showed minuscule drift over life.

TO: Bill Sweet
FM: Matt Sellers
SJ: Highlights, w/E 2/15/91

CAN I SEE Breakdown

Chrysler LH . . . Assumptions are use of G.M Sensor Component tooling and Assembly tooling. Also use of Ford Pressure testers. Tooling Summary was passed on to marketing outlining the program tooling requirements, ($131K). Component tooling includes two terminals and a base mold.

Terminals

	Movable Tool	Stationary Tool
* A.J. Knott	$14.2K + $23.56/K	$16.3K + $57.33/K
* Bassler	$18.8K + $29.75/K	$21.0K + $63.78/K

* Stewart, Bally, Thomas → In quote cycle still.

Base mold

* AFCC $38.0K + $85.63/K

* Nypro, Dynarst, etc. → In quote cycle still

Bassler has indicated that an updated quote is forthcomming. Hopefully will be more in-line with A.J. Knott. Lead time is critical. A.J. Knott says they can finish early June!?? Seems optimistic, but Bassler is into the second week in July; as we predicted.

what we have listed for

77PS

Calibrator experiments with 77PS base assemblies have surfaced an additional problem with the spring/terminal assembly. When calibrated, the spring is at an acute angle rather than horizontal. Impact on Eastern Automotive tooling or terminal tooling has yet to be determined.
First 100 devices - 20 measured had a sigma of 0.9 mils when measured with the design continuity method.

77P5 Cont

TDR will be released on T.I.'s gauge per a Final design review. The focus of the last design review was to discuss R+R aspects of the measurement technique. The nesting technique in the gauge is key and TDR will make all efforts to provide consistancy.

Production

Efforts to reduce low pin incendence have been concentrated on the pre-crimp station. Alignment of the bottom plunger, and upgrades to the top plunger delivery system have reduced the defect percentage from 1 1/2 / 2 % range to .3 %.

77P5 Cont.

Valentine is off tweaking the Alum. Ring and low-ratio cup tools per an FAI review meeting last monday. Repair completion and review will be late next week.

Marketing has requested further breakdown of the CCPS tooling list. Specifically, they are requesting detail on what the T.I. Capital is buying. This request is being driven by ford in an effort to ensure T.I. is buying re-usable assets. Mechinists has been tasked to provide a detailed outline on the (4) pieces of automation

-MSG M#= 66425 FR=SBO1 TO=PCQA SENT=02/15/91 06:44 AM
R#=177 ST=C DIV=0050 CC=00101 BY=SBO1 AT=02/15/91 06:44 AM

TO:	Dave Czarn	ZARN	CC:	Mike DeMattia	PCQA
	John Haynes	PCQA		Charlie Douglas	CPPC
				Matt Sellers	PCME

FR: Steve Offiler SBO1

SJ: 77PS Design FMEA

The purpose of this memo is to explain in greater detail the recent schedule slip on the FMEA start date. According to previously agreed upon dates, the meetings were supposed to start up on Tuesday 91-02-12. They did not.

Today's highlights (91-02-15) will explain the activities given highest priority recently.

Items planned to receive highest priority in the coming few days include:

** Final emergency iteration to the 77PS spring (36889). Results of two recent calibration runs show this to be necessary. Steve M. indicates this late change will waste Eastern Automation design time, but fortunately nothing is in steel yet. Furthermore, the model shop is about to produce another 200 springs for us.

** Clean up myriad of details to finalize all production component prints and subassembly dwgs. to allow creation of parts lists.

** 77PS planning and creation of a detailed schedule.

I'd like to begin work on the DFMEA after the above are completed. I propose that the first meeting take place on Tuesday, 91-02-26, time and place T-B-D. The end date originally given of 91-04-18 will not change at this point.

Regards,
Steve O.

TEXAS INSTRUMENTS

DIMENSIONAL ANALYSIS ON PART NUMBER

F2VC-9F924-AB/1259876

	BLUEPRINT SPEC	CAVITY # 1C ACTUAL	CAVITY # 2C ACTUAL	CAVITY # 3C ACTUAL	CAVITY # 4C ACTUAL	CAVITY # 5C ACTUAL	CAVITY # 6C ACTUAL	COMMENTS
1	2.84 - 3.05	2.93	2.92	2.92	2.92	2.93	2.93	
	⊕ 0.1 Ⓜ A	0.041	0.020	0.033	0.031	0.015	0.013	
	1.98	1.859	1.920	1.933	1.869	1.885	1.887	
2	22.00 MAX	18.64	18.57	18.54	18.69	18.63	18.61	
		18.56	18.66	18.66	18.77	18.71	18.67	
3	57.15 MAX	55.65	55.70	55.71	55.70	55.69	55.60	
4	9.66 - 9.39	9.59	9.61	9.57	9.49	9.58	9.55	
		9.63	9.66	9.64	9.62	9.74	9.67	OUT OF SPEC
5	2.04-1.52 ref	2.040	1.732	1.783	1.727	1.781	1.796	
6	Ø 8.03-1.02ref	7.94	3.94	7.93	7.93	7.98	7.96	
		7.58		7.99				
7	0.25X30-40 DEG	CHAMFER	N/A -	THREADS	HAVE BEEN	ADDED		
8	3/8-24UNF-2A	OK	OK	OK	OK	OK	OK	
	THD. -D-							
9	1.40 - 1.10	1.316	MEASURED	ON A CROSS	SECTIONED	PART		

-MSG M#= 154568 FR=FRE3 TO=PCQA SENT=02/19/91 03:19 PM
R#=076 ST=C DIV=0050 CC=00484 BY=FRE3 AT=02/19/91 03:19 PM

TEXAS INSTRUMENTS INC.

ATTLEBORO, MASSACHUSETTS

MATERIALS & ELECTRICAL PRODUCTS GROUP

TELEPHONE CONVERSATION RECORD AND CONFIRMATION. DATE FEB. 19, 1991

CUSTOMER: STEVE OFFILER

INDIVIDUAL: DAN FREEDMAN

I CALLED : 1:30PM (TIME)

OUR JOB # CRUISE CONTROL

PART # 46515 REV C (PENDING)

CONVERSATION NOTES: DISCUSSED DIMENSION 2X.063/.075 RADIUS (BUMP) CENTER VIEW, WOULD LEFT TOP VIEW (BUMP) MAINTAIN RADIUS ON BOTH ENDS AND .543/.531 LONG.

CONVERSATION SUMMARY: YES, BOTH WOULD BE MAINTAINED IN CURRENT DESIGN AND CLEARIFIED WHEN UPDATING TO REVISION C.

NAME DAN FREEDMAN (MOLD DESIGN) FRE3 M/S 1-46 EXT. (508)699-1504

COPY:	RAY TOURANGEAU	PCME	DAVE CZARN	SARN
	BILL ARCHIBALD	APCQ	TOM CHARBONEAU	TC
	NORM ROY	MLDG	MATT SELLERS	PCME
	NORM TREMBLAY	MLDG	~~REG ANGELO~~	MLDG
	STEVE WALTERS	MLDG	MIKE DEMATTIA	PCQA
	DENNIS BOIROS	MLDG	STEVE OFFILER	SBO1
	ANDY MCQUIRK	PCQA		

Pulsw -
FYI -
Get on Dis. Lsn

CCPS QUALITY ASSURANCE START-UP REQUIREMENTS

ACTION	DATE REQUIRED
REVIEW & UPDATE 57PS QAS/CHARACTERISTIC SHEETS	2/20
DESIGN FMEA	
START	????
COMPLETE	4/18
PROCESS FMEA	
START	????
COMPLETE	7/1
DEVELOP 77PS QAS (PRELIMINARY)	7/1
DEVELOP 77PS CHARACTERISTIC SHEETS	7/15
COMPLETE GAGE R&R STUDIES FOR ALL 77PS GAGES	7/15
ESTABLISH 77PS MANUFACTURING CONTROL PLAN	7/15
FINALIZE 77PS QAS	8/1
SUBMIT 77PS ISIR	8/1
ESTABLISH 77PS START-UP INSPECTION REQUIREMENTS	8/15
SET-UP 77PS SPC FILES	8/15

-MSG M#= 154568 FR=FRE3 TO=PCQA SENT=02/19/91 03:19 PM
R#=076 ST=C DIV=0050 CC=00484 BY=FRE3 AT=02/19/91 03:19 PM

TEXAS INSTRUMENTS INC.

ATTLEBORO, MASSACHUSETTS

MATERIALS & ELECTRICAL PRODUCTS GROUP

TELEPHONE CONVERSATION RECORD AND CONFIRMATION. DATE FEB. 19, 1991

CUSTOMER: STEVE OFFILER

INDIVIDUAL: DAN FREEDMAN

I CALLED : 1:30PM (TIME)

OUR JOB # CRUISE CONTROL

PART # 46515 REV C (PENDING)

CONVERSATION NOTES: DISCUSSED DIMENSION 2X.083/.075 RADIUS (BUMP)CENTER VIEW, WOULD LEFT TOP VIEW (BUMP) MAINTAIN RADIUS ON BOTH ENDS AND .543/.531 LONG.

CONVERSATION SUMMARY: YES, BOTH WOULD BE MAINTAINED IN CURRENT DESIGN AND CLEARIFIED WHEN UPDATING TO REVISION C.

NAME DAN FREEDMAN (MOLD DESIGN) FRE3 M/S 1-46 EXT. (508)699-1504

COPY:	RAY TOURANGEAU	PCME	DAVE CZARN	ZARN
	BILL ARCHIBALD	AFCO	TOM CHARBONEAU	TC
	NORM ROY	MLDG	MATT SELLERS	PCME
	NORM TREMBLAY	MLDG	~~DEE ANGELO~~	MLDG
	STEVE WALTERS	MLDG	MIKE DEMATTIA	PCQA
	DENNIS BOIROS	MLDG	STEVE OFFILER	SBO1
	ANDY MCQUIRK	PCQA		

Follow-
FYI -
Get MD involved

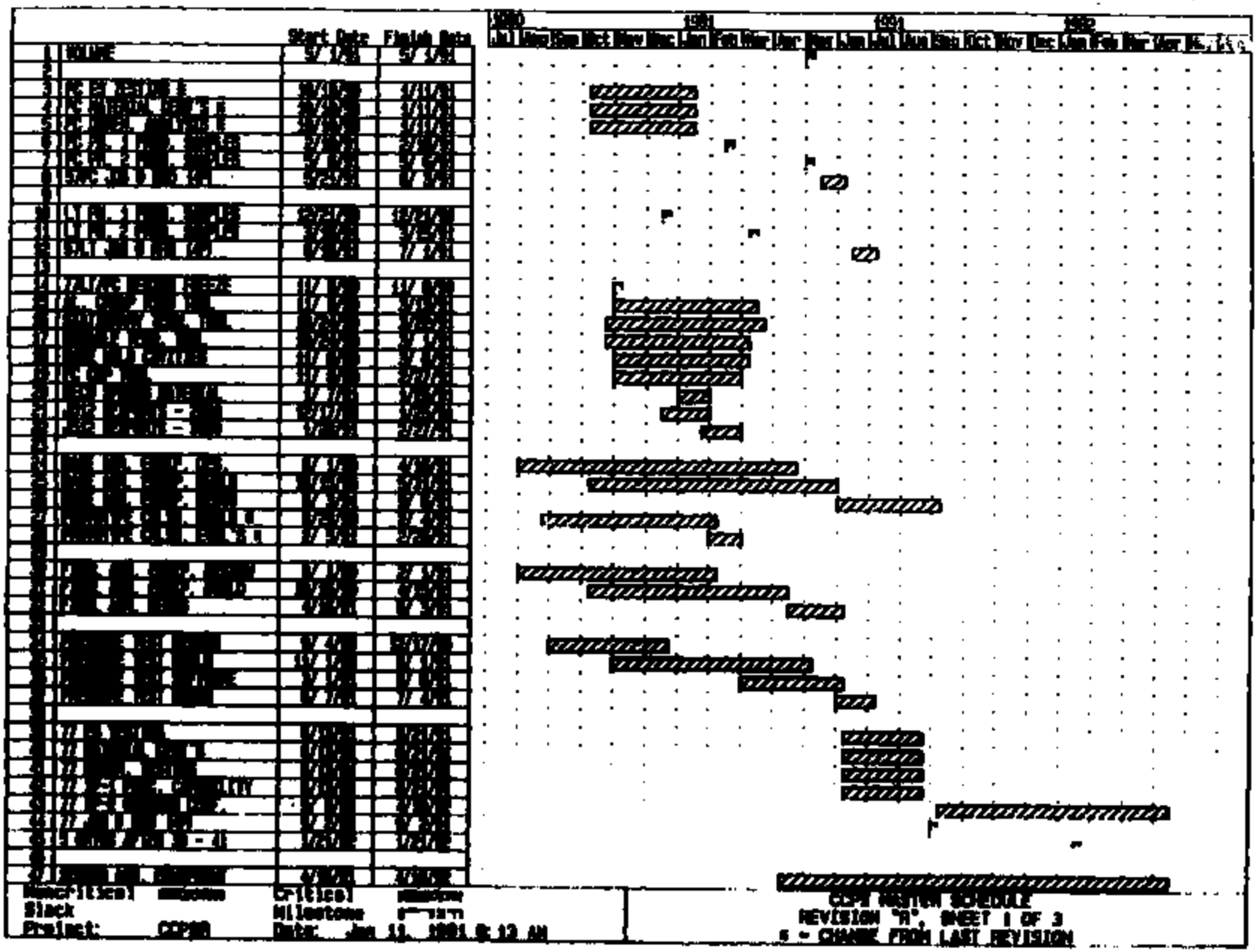
Start Date
Finish Date
Critical
Critical
Slack
Milestone
Project: CCPM
Date: Jan 11, 1991 8:12 AM
CCPM MASTER SCHEDULE
REVISION "A", SHEET 1 OF 3
S - CHANGE FROM LAST REVISION

		Start Date	Finish Date
1	LIGHT TRUCK SCHEDULE	12/11/90	12/11/90
2	==========	12/11/90	12/11/90
3	J512 HEXPORTS (2K)	12/17/90	1/25/91
4	28/12-15 DISCS	12/11/90	1/ 3/91
5	ALUMINUM RINGS (15K)	12/21/90	2/18/91
6	46412 LT BLACK BASES	1/11/91	1/24/91
7	ALL OTHER STD 57PS COMP	12/11/90	12/11/90
8			
9	TEMP RING CODER MOD	2/ 8/91	2/14/91
10	DEVICE CRIMP NEST MOD	1/ 7/91	1/18/91
11	PRESSURE TESTER SOFTWARE	11/27/90	1/11/91
12			
13	57PS LIGHT TRUCK PILOT	2/19/91	3/ 4/91
14			
15			
16			
17	PASS CAR SCHEDULE	12/11/90	12/11/90
18	==========	12/11/90	12/11/90
19	J512 HEXPORTS (2K MORE)	1/25/91	2/25/91
20	22/10-13 DISCS	12/11/90	1/ 3/91
21	ALUMINUM RINGS 2 (15K)	12/21/90	2/18/91
22	46412 OFFSET PC BASES	1/11/91	1/24/91
23	PC CUP SAMPLES	11/ 8/90	2/27/91
24	ALL OTHER STD 57PS COMP	12/11/90	12/11/90
25			
26	TEMP RING CODER MOD 2	2/ 8/91	2/14/91
27	DEVICE CRIMP NEST MOD 2	1/ 7/91	1/18/91
28	PRESSURE TESTER SOFTWARE	11/27/90	1/11/91
29			
30	57PS PASS CAR PILOT	2/28/91	3/13/91

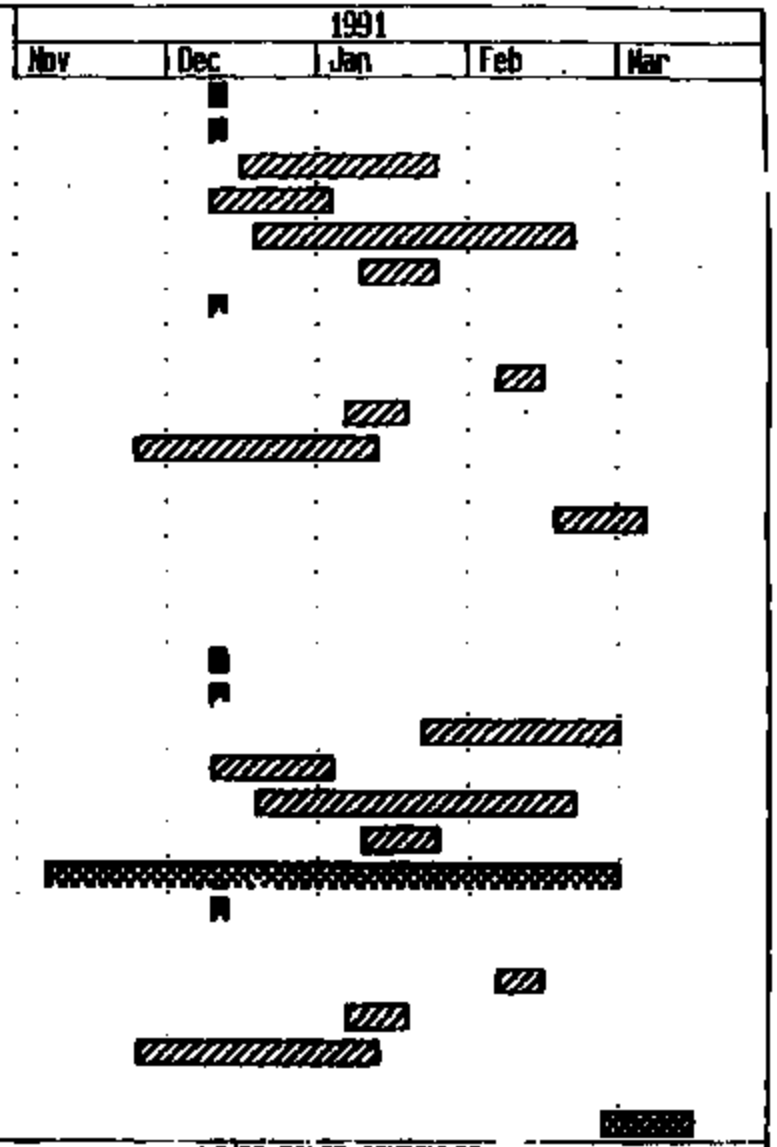

Noncritical
Critical
Slack
Milestone
Project: CCPSR2
Date: Jan 10, 1991 5:21 PM

LT/PC PILOT SCHEDULES
REVISION "A" SHEET 2 OF 3

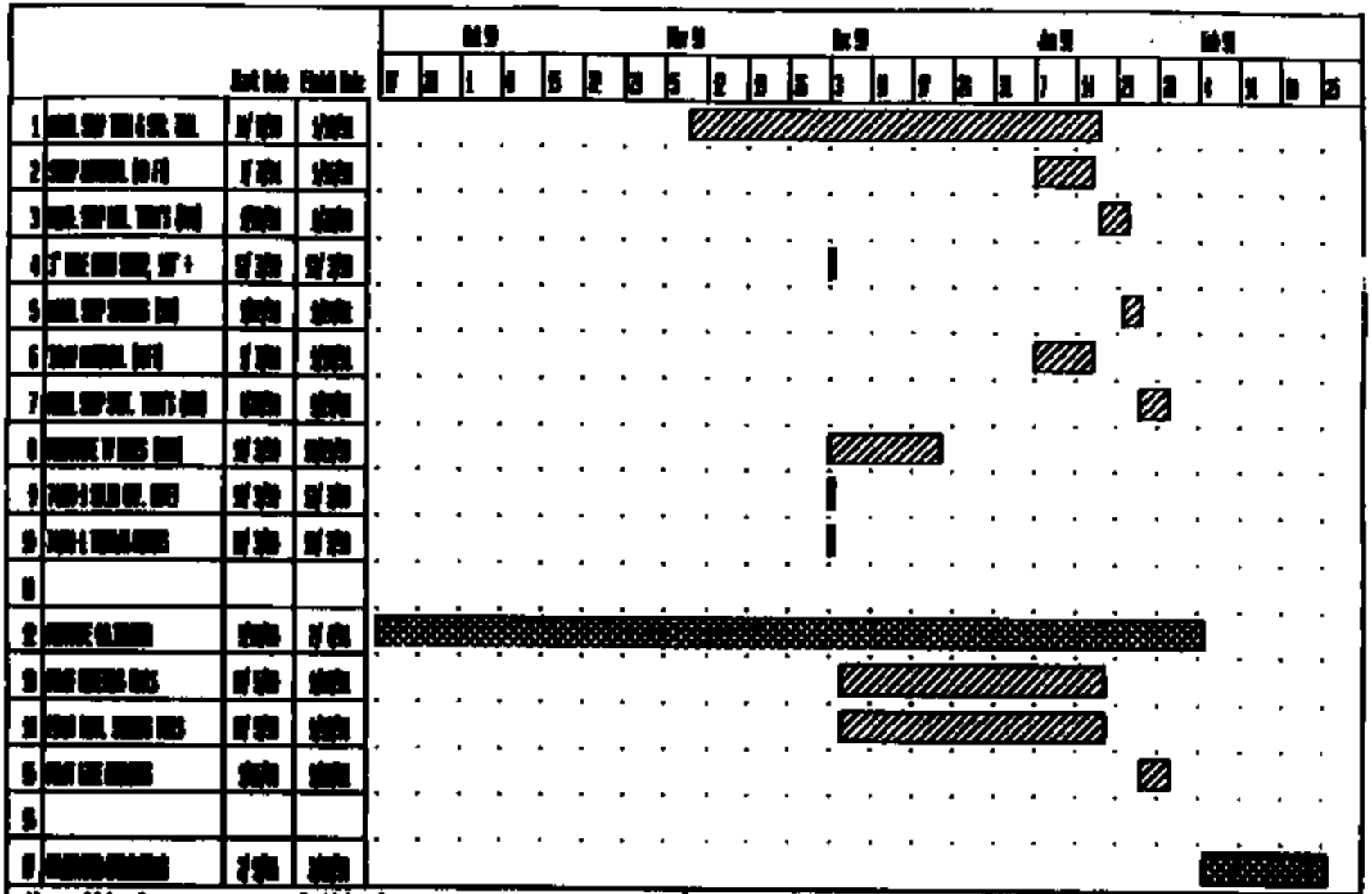

Noncritical Critical
Slack Milestone
Project: CCPS93 Date: Jan 10, 1991 5:06 PM

CALIBRATION EVALUATION SCHEDULE
REVISION "N" SHEET 3 OF 3

-MSG M#= 176895 FR=CZRN TO=PCQA SENT=02/20/91 11:35 AM
R#=100 ST=C DIV=0050 CC=00101 BY=CZRN AT=02/20/91 11:35 AM

FEBRUARY 20, 1991

TO:	RUSTY STRUBEL	RCS2	CC:	TOM CHARBONEAU	TC
	MIKE DeMATTIA	PCQA		JOHN KOURTESIS	MDES
	CHARLIE DOUGLAS	CPPC		STEVE MAJOR	WHLI
	DICK GARIEPY	MFPC		ANDY McGUIRK	PCQA
	PAUL KOTCH	PRK1		ED O'NEILL	EJON
	JOE LAZARE	JML8		JOE SCHUCK	WELI
	STEVE OFFILER	SBO1		GARY SNYDER	CPPC
	MATT SELLERS	PCME		MARTHA SULLIVAN	CPPC
	BILL SWEET	PCME		RAY TOURANGEAU	PCME
	GEORGE LAVOIE	B512		TED BALLARD	AVME
	JOHN HAYNES	PCQA		DAVE VARNEY	FORM
				SCOTT MARTIN	MFPC
				CLAIRE BALTHAZAR	MFPC
				BILL CONGDON	MFPC
FR:	DAVE CZARN	ZARN			

SJ: FORD CRUISE CONTROL PRESSURE SWITCH START-UP MEETING:
02/14/91 MEETING MINUTES

MEETING

THE NEXT MEETING IS SCHEDULED FOR

DATE: 02/21 (THURSDAY) **PLEASE NOTE
TIME: 10:00-11:30 AM ROOM CHANGE**
PLACE: Q-TIP ROOM

PLEASE CALL ME IF YOU ARE NOT ABLE TO ATTEND

* = NEW OR REVISED ITEMS

57 L/T	WHO	WHEN	
Hexport:			
* FINAL GAGE REVIEW	SELLERS/	02/05	ORIG.
	OFFILER	02/14	REV.
		02/14	COMP.
* RELEASE GAGE FOR BUILD	SELLERS	02/07	ORIG.
		02/14	REV.
		02/18	COMP.
. ELCO CONTROL PLAN	KOTCH	01/17	ORIG.
(DELAYED DUE TO J512 GAGING DEFINITION)		02/28	REV.
. ISIR corrective actions:			
* A. TERMINAL DIMENSIONS			
- M.C. STUDIES FROM AJ KNOTT	KOTCH	01/04	ORIG.
		02/21	REV.
* DISC LIFE TEST FROM EACH LOT	OFFILER/	02/14	ORIG.
	GARIEPY	02/14	COMP.
. L/T PILOT RUN	SELLERS/	01/24	ORIG.
	GARIEPY	03/18	REV.
. CREATE L/T EIS PARTS LIST	OFFILER/	01/24	ORIG.
AND B.O.M. (ORIG. DATE WAS INCORRECT)	WILSON	03/07	REV.
* RESOLVE TERMINAL POS'N ISSUE	TEAM	03/21	

57 P/C

* OFFSET POLARITY KEY BASE PRINT	OFFILER	11/16	ORIG.
		02/21	REV.
. P/C PILOT RUN	SELLERS/	01/31	ORIG.
	GARIEPY	03/18	REV.
. CREATE P/C EIS PARTS LIST	OFFILER/	01/24	ORIG.
AND B.O.M.	WILSON	02/21	REV.
. ENV. DWG. WITH REVISED POS'N TERM. TOL.	OFFILER	02/28	

77PS

. DESIGN UPDATE	OFFILER	ONGOING	
. MFG/MECH UPDATE	SELLERS	ONGOING	
. REPORT ON TOKICO P.S. RESPONSIBILITY	DOUGLAS	ONGOING	
. COMPLETE DESIGN FMEA	OFFILER	04/18	
. PROD. LINE LAYOUT	SELLERS	03/14	
. PROD. LINE SET-UP (RTE CARDS, ETC)	BALTHAZAR	TBD	
. PROVIDE DATES FOR COMPLETION OF ABOVE	BALTHAZAR	02/21	
. PROVIDE QUALITY RELATED CRITICAL PATH ITEMS TO TRACK AT S/U MTGS.	HAYNES	02/21	
* ORDER ADD'L M.S. TERM'S AND SPRINGS	OFFILER	02/07	ORIG.
		02/13	COMP.
* DETERMINE IF CLEARANCE SHOULD BE ADDED FOR MOV. ARM IN THE BASE	OFFILER	02/14	ORIG.
		02/14	COMP.

TOP'S:

. BASE	SELLERS	02/28	

PRODUCTION COMPONENTS:

. ALUMINUM CRIMP RING	LAVOIE	02/11	
. REBUMP CUP	LAVOIE	02/27	
. MOVABLE TERM.	LAVOIE	03/01	
. STATIONARY TERM.	LAVOIE	03/22	
. BASE	SELLERS	03/06	ORIG.
(AFCC DELIV. DATE PUSH-OUT)		03/15	REV.
. HEXPORT (P/N 36900)	KOTCH	03/04	

MANUFACTURING EQUIPMENT:

. FINAL ASM MACHINE BUILD COMPLETION	SELLERS/ KOURTESIS	04/15	
. BASE ASM MACHINE BUILD COMPLETION	SELLERS/ KOURTESIS	05/31	
. PRESSURE TESTER BUILD COMPLETION	SELLERS/ KOURTESIS	06/06	

FORD AUSTRALIA

. FORD AUSTRALIA UPDATE	DOUGLAS	ONGOING	

DISCUSSION

57 L/T AND P/C

A BRAINSTORMING SESSION FOR IMPROVING TERMINAL POSITIONING WAS HELD WITH DESIGN/QUALITY/MFG ENG/MECH. MISALIGNMENT IS ALWAYS IN THE SAME DIRECTION; SEVERAL POSSIBLE CAUSES WERE IDENTIFIED. MFG. ENGINEERING WILL EVALUATE A FEW CONCEPTS THAT WERE DISCUSSED TO

IMPROVE POSITIONING.

77PS

.
CALIBRATOR DEBUG HAS HIGHLIGHTED WHAT APPEARS TO BE A PROBLEM WITHTHE SPRING/TE
RMINAL DESIGN. STEVE IS EVALUATING TO DETERMINE IF
TOOLING CORRECTIONS ARE NEEDED.

.
CALIBRATED SWITCHES WERE SUCCESSFULLY IMPULSE TESTED. THE FIRST
77PS PRODUCTION INTENT SWITCHES WERE SHIPPED TO L/T LAST WEEK.

.
DISC LIFE TESTING CONFIRMED THAT THE PASSIVATED .0122" WILL BE
ADEQUATE FOR THE 77PS.

.
BOTH ANI'S HAVE BEEN DELIVERED.

MILESTONES	PLANNED	ACTUAL
57 L/T ISIR	11/21/90	11/21/90
57 L/T JOB 1	07/01/91	
57 P/C ISIR	01/15/91	01/15/91
57 P/C JOB 1	06/03/91	
77PS ISIR	08/01/91	
77PS SOP (TI)	09/01/91	

PRODUCTION PLAN BY MONTH (THOUSANDS)

	P/C 57PSLS-3	L/T 57PSLS-2	P/C 77PSL2-1	L/T 77PSL2-2
FEB	0	0	0	0
MAR	5	0	0	0
APR	5	0	0	0
MAY	10	3	0	0
JUN	*17	4	0	0
JUL	17	*5	0	0
AUG	17	7	4	0
SEP	17	7	10	0
OCT	0	7	**12	5
NOV	0	7	17	7
DEC	0	0	17	**7

NOTE: PLAN FOR AUGUST AND BEYOND IS TENTATIVE.
* = JOB1 FOR 57PS VERSIONS
** = TENTATIVE JOB1 FOR 77PS VERSIONS

REGARDS,
DAVE CZARN \11-FORD

HIGHLIGHTS
Stephen B. Offler
Week Ending 02/22/91

FORD MY'92 ELECTRONIC SPEED CONTROL DEACTIVATE PS

CUSTOMER ISSUES: Communication with TIJ via Charlie Douglas regarding Tokico continues. They've clarified their need for a nickel-plate hexport. The master cylinder itself is made of aluminum (not Al/Cu alloy as reported earlier), but the brake lines are copper. Any zinc entering the system will cause corrosion of the brake tubing and potential failure. They seem quite firm on this issue. Charlie has met with Bob Babcock, who confirmed the above. He further indicated that a nickel-plate hexport, assembled to a zinc-plate cup and an aluminum crimp ring, will not be a problem. We have a verbal sample request for 12 77PS's with nickel-plate hexports, now due in 3 weeks. We will strip and replate hexports to meet this need. Matt Sellers is speaking with Denis Villiard regarding a nickel-plating specification. Historically, we have used a chromium-over-nickel plating system on 52PS hexports, which shows excellent salt-spray resistance at a premium price.

We have just received a fax from TIJ showing an assembly of the Tokico master cylinder with pressure switch in place. Immediately apparent are: 1) they are using an O-ring seal; 2) they are allowing about 46mm for overall switch length minus thread, our device is 47.75mm; and 3) they are allowing 30mm max for overall diameter of the crimp ring, our device is 32.5mm. Of these issues, the O-ring is good news, the overall length may not be much of a problem (we may shave 1.75mm of the hex flats) but the diameter is a potential killer. Reducing this means redesign/retooling of the hexport, washer, cup, and convertor, and possibly a move to a smaller disc as well.

We have shipped the balance of 63 77PS's to Ford Light Truck to complete their order of 75. Also, we shipped 3 77PS's (Pass-Car spec) to Bendix to complete their order.

77PS ISSUES: A dimensional study of the Model Shop prototype parts has highlighted areas which are contributing to the problems with the spring position. The movable-terminal end of the spring is too high, forcing the calibration operation to push the stationary contact down excessively in order to reach the predetermined bump height. The fact that the end is too high seems to be a stackup of the spring hole too low, the movable-terminal hole too high, and the base too short. We plan to restamp the hole in the movable terminal (producing an oval slot) to bring the spring down where it belongs. This will require careful riveting. This is actually a problem related to prototype parts not meeting print; the prints themselves seem correct. A separate issue is the position of the bump, which is drastically off-center. I have updated the production print to correct this. A mockup has been delivered to Mechanization to be forwarded to Eastern Automation.

Powered impulse testing of the 77PS contact system, using the 74488 low-current contact, shows acceptable performance but the contacts are obviously nearing the end of life. We plan some more extensive testing and formal analysis of the contacts.

Some analysis of the calibration data taken last week has been completed. The calibrator's reported measurement of each of 25 devices was compared with a manual measurement taken by Jeff DiDomenico. Six devices were also measured separately by the calibrator and Jeff to determine gaging errors. We found the calibrator gage error to be slightly tighter than Jeff's, sigma of roughly 0.12 mils vs 0.15 respectively. The data on the 25 devices shows very good agreement between the calibrator and Jeff; both have sigma's of 0.52 mils. Removing gage errors, it looks like the calibrator is capable of a sigma of about 0.4 mils.

HIGHLIGHTS
Stephen B. Offiler
Week Ending 02/22/91

FORD MY'92 ELECTRONIC SPEED CONTROL DEACTIVATE PS

CUSTOMER ISSUES: Communication with TII via Charlie Douglas regarding Tokico continues. They've clarified their need for a nickel-plate hexport. The master cylinder itself is made of aluminum (not Al/Cu alloy as reported earlier), but the brake lines are copper. Any zinc entering the system will cause corrosion of the brake tubing and potential failure. They seem quite firm on this issue. Charlie has met with Bob Bebolan, who confirmed the above. He further indicated that a nickel-plate hexport, assembled to a zinc-plate cup and an aluminum crimp ring, will not be a problem. We have a verbal sample request for 12 77PS's with nickel-plate hexports, now due in 3 weeks. We will strip and replate hexports to meet this need. Max Sellers is speaking with Denis Villiard regarding a nickel-plating specification. Historically, we have used a chromium-over-nickel plating system on 52PS hexports, which shows excellent salt-spray resistance at a premium price.

We have just received a fax from TII showing an assembly of the Tokico master cylinder with pressure switch in place. Immediately apparent are: 1) they are using an O-ring seal; 2) they are allowing about 46mm for overall switch length minus thread, our device is 47.75mm; and 3) they are allowing 30mm max for overall diameter of the crimp ring, our device is 32.5mm. Of these issues, the O-ring is good news, the overall length may not be much of a problem (we may shave 1.75mm of the hex flats) but the diameter is a potential killer. Reducing this means redesign/retooling of the hexport, washer, cup, and converter, and possibly a move to a smaller disc as well.

We have shipped the balance of 63 77PS's to Ford Light Truck to complete their order of 75. Also, we shipped 3 77PS's (Pass-Car spec) to Bendix to complete their order.

77PS ISSUES: A dimensional study of the Model Shop prototype parts has highlighted areas which are contributing to the problems with the spring position. The movable-terminal end of the spring is too high, forcing the calibration operation to push the stationary contact down excessively in order to reach the predetermined bump height. The fact that the end is too high seems to be a stackup of the spring being too low, the movable-terminal hole too high, and the base too short. We plan to restamp the hole in the movable terminal (producing an oval slot) to bring the spring down where it belongs. This will require careful riveting. This is actually a problem related to prototype parts not meeting print; the prints themselves seem correct. A separate issue is the position of the bump, which is drastically off-center. I have updated the production print to correct this. A markup has been delivered to Mechanization to be forwarded to Eastern Automation.

Powered impulse testing of the 77PS contact system, using the 74488 low-current contact, shows acceptable performance but the contacts are obviously nearing the end of life. We plan some more extensive testing and formal analysis of the contacts.

Some analysis of the calibration data taken last week has been completed. The calibrator's reported measurement of each of 25 devices was compared with a manual measurement taken by Jeff DiDomenico. Six devices were also measured repeatedly by the calibrator and Jeff to determine gaging errors. We found the calibrator gage error to be slightly tighter than Jeff's, sigma of roughly 0.12 mils vs 0.15 respectively. The data on the 25 devices shows very good agreement between the calibrator and Jeff; both have sigma's of 0.52 mils. Removing gage errors, it looks like the calibrator is capable of a sigma of about 0.4 mils.

TO: Bill Sweet
FM: Matt Sellers
SJ: Highlights . w/E 2/22/91

77PS

Mechanization has made up two of the four weeks pushout on the completion of the pressure tester build. They anticipate making up some additional time when an assessment is taken in the tool room.

Valentine has completed fixes on the aluminum crimp ring tool, and have re-submitted this morning. The cup tool is still being tweaked with completion expected by Monday. Valentine and T.I. will the re-convene at the inspection table and work out correlation issues and print issues.

Bassler has lost the "Ahead of schedule" status on the tools, and is currently toying with the original completion date. This was apparantly due to problems with the Volvo project terminals. It is imperative that movable terminal samples be provided to Eastern Automation ASAP. Bassler must be on time

Chrysler LH

Bassler and A.J. Knott are being excercized as the top two terminal supplier candidates. Both indicate a willingness to commit to a June 7 delivery in support of Chrysler's June 23 sample delivery requirement. A trip to A.J. Knott to complete an evaluation is planned for monday.

TI-NHTSA 001727

AFCC and Nypro are candidates for tooling up the base mold. The issues with Nypro are lead time, no history, and reduced controlability by us. This tool will be the gating item in meeting the June 23 date. AFCC will be

LH Continued

Asked to propose A Single Cavity prototype to ensure timely Availability of bases. It looks like A 6-week delivery @ $ 15K.

APG

The Ring Feeder upgrade is being delayed two weeks due to the Capital under $5K Fund drying up A Req. will be cut the First week in March to Automation Devices Inc. A 6-week lead time is Anticipated. The Feeder will handle Alum And Steel

Peripoli / Robichaud Are working on tweaks to Allow use of the Aluminum ring on the APG Crimp nest Are Complete. Main dial nest Are being done.

AMI

Chromate has Consistantly been Allowing A better crimp than the un-chromated situation. we Are Still looking At A .005" to .010" shift in crimp diameter. we have not 'Centered' the process yet. we Are Still Skewed Slightly high. However, the Indexer upgrade may Assist in An $\bar{x}$ shift by improving the Alignment - thus reducing out of roundness

The indexer / table ~~[illegible]~~ has been delayed to 3/16 Installation due to problems with the indexer supplier.

The low Pin incedence rate has been dropped From 2-3% range to .1-.3% range! this was Accomplished by re-design of the hold down probe And Also upgrade of the bottom plunger. Bob Robichaud And Bassitier Are drawing up A P.M. procedure For the operator to ensure Consistant probe Force on the disc

C 316356
S 22251

SALES CODE
502010

ROMES, NEW Y 13440

17715

0 1 0 0 0 0 0 0

DATE	INVOICE NO
07/26/91	02740

INVOICE TO: VALENTINE TOOL & STAMPING, INC.
171 W MAIN ST
NORTON, MA 02766

ATTN: JEANNE LAFLAMME, Q.C. MGR.

SHIP TO: VALENTINE TOOL & STAMPING, INC.
171 W MAIN ST
NORTON, MA

HIT (LBS)	NO. CLS	NO. BNDS OR BDLS	SHIPPING CONTAINER	SHIPPED BY
15,154	040	06	CAMP	R S S

W NO	C	NN	P	S	SF	RI	CB NO
466709	07	34	012	006	01		

REQUIREMENTS OF:
ORDER NO 13428

COLOR CODE

12MM X 50.8000		02456	PREPAID COLLECT PREPAID		PAPER WRAP			
.04000 X 2.0000	0 50 MAX	COIL	400 LBS	3000	SKID SIZE			
.001 -.001 +.005 -.005	MILL SLIT	220 PIN 16 36				3741		
.125 -.025MM +.127 -.127MM								

CLASS	MFG NO.
ALUM KILD	C-1006

TEST REPORT

Certificate of Compliance

TEST: [illegible]

[illegible] 15/030291
Notary Public, Oneida County, [illegible]
My commission expires [illegible]

I certify that the above figures are a true and correct copy of those contained in the records of this corporation.

ROME STEEL STEEL CO., INC

TI-NHTSA 001729

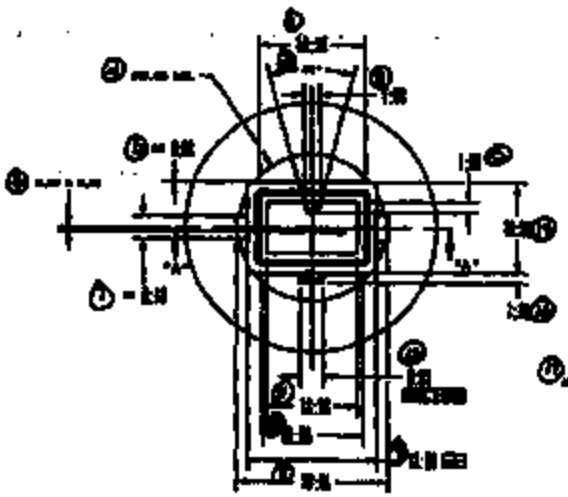

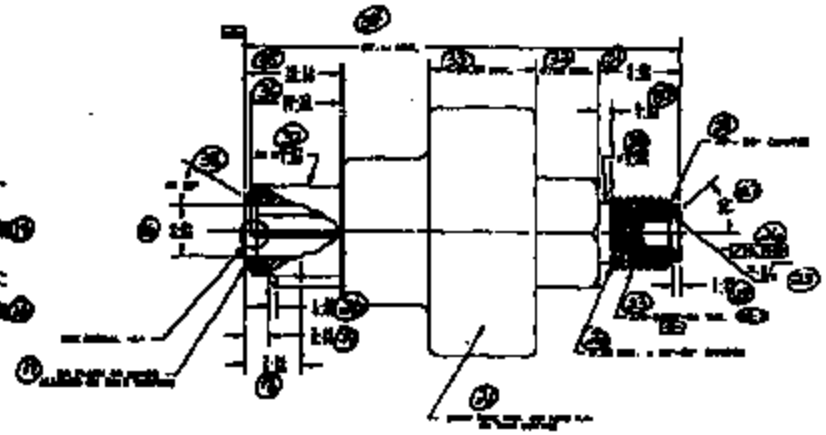

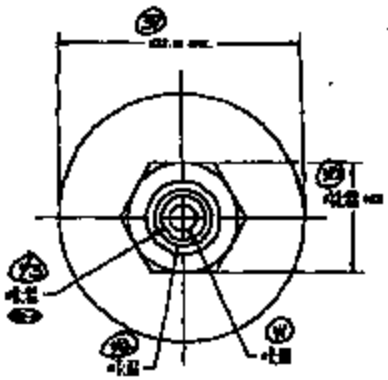

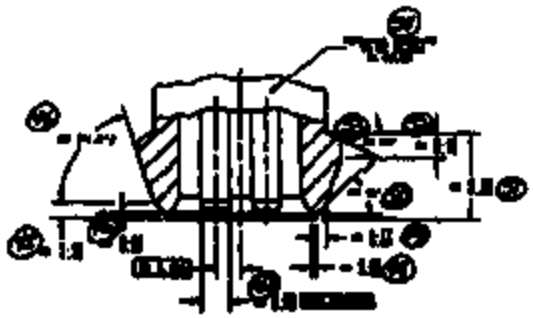

SECTION 'A-A'

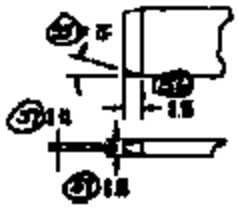

DETAIL 'A'

SPECIFICATIONS AND NOTES

DIMENSIONING AND TOLERANCING IN ACCORDANCE WITH ANSI Y14.5M-1982

MANUFACTURE TO LATEST ISO PRODUCT ENGINEERING APPROVED DRAWING PLAN

CHANGE IN DESIGN CONFIGURATION ON DRAWING FROM THE PART REPRESENTED APPLIES FOR PRODUCTION REQUIRES PRIOR ENGINEERING APPROVAL

ENGINEERING APPROVAL OF PRODUCTION SAMPLE FROM THE PART REPRESENTED REQUIRED PRIOR TO JUSTIFICATION OF PRODUCTION

PART MUST COMPLY WITH SPECIFICATION [illegible] TO HELP [illegible] HEALTH, SAFETY AND ENVIRONMENT

METRIC

D

TI-NHTSA 001730

-MSG M#= 307114 FR=SBO1 TO=PCQA SENT=02/26/91 09:44 AM
R#=049 ST=C DIV=0050 CC=00101 BY=SBO1 AT=02/26/91 09:44 AM

TO:	John Haynes	PCQA	CC:	Dave Czarn	ZARM
	Joe Schuck	WHLZ		Mike DeMattia	PCQA
	Matt Sellers	PCME		Charlie Douglas	CPPC
				Stan Homol	SM2

FR: Steve Offiler SBC1

SJ: Conversation w/ Joe Schuck

Joe called me today in order to prep for his meeting this morning with George Randall and a call later today to Bruce Pease.

We have recently sent revised prints to George, showing the newly negotiated terminal alignment spec of 0.50mm +/- 0.20 and also showing J512 relaxed dimensions that match Bruce's prints. Now, we need to get ISIR approval for the Light Truck device (57PSL5-2) by demonstrating that we can meet the new terminal spec. I briefed Joe on the latest efforts to improve alignment, using 76PS tooling. Once solid improvements are obtained, we need to translate them to the production 57PS tooling. The timetable for this is unclear in my mind.

Joe suggested that we pull out the LT ISIR dimensional data, to determine if we are now in-spec. using the new tolerance. I have done this, and the answer is NO. Four of the six stationary-terminal measurements are outside the new range. All of the six movable-terminal measurements are in spec. Therefore, our only recourse is to make improvements to the 57PS tooling and resubmit dimensional data. We need to understand and communicate to Ford when this will happen.

On the subject of Pass-Car, Bruce Pease has informed us that he cannot use the color gray for his switches, because on certain carlines the CCPS will be located in close proximity to the 57PSL2-2 which is also gray. We can't use black because the truck CCPS is black. We can't use white or blue because of the 57PSF3-3 and -5, which are also Pass-Car brake switches. Ford Powertrain is requesting "dark, subdued" colors for underhood beautification reasons, which rules out green, red, yellow, and purple. We've tentatively arrived upon brown as the best possibility. This applies to both 57PSL5-3 and 77PSL2-1. Please direct any comments on this color choice to me immediately.

Regards,
Steve O.

CCPS QUALITY ASSURANCE START-UP REQUIREMENTS

ACTION	DATE REQUIRED
REVIEW & UPDATE 57PS QAS/CHARACTERISTIC SHEETS	2/28
DESIGN FMEA	
START	----
COMPLETE	6/15
PROCESS FMEA	
START	----
COMPLETE	7/1
DEVELOP 77PS QAS (PRELIMINARY)	7/1
DEVELOP 77PS CHARACTERISTIC SHEETS	7/15
COMPLETE GAGE R&R STUDIES FOR ALL 77PS GAGES	7/15
ESTABLISH 77PS MANUFACTURING CONTROL PLAN	7/15
FINALIZE 77PS QAS	[illegible]
SUBMIT 77PS ISIR	[illegible]
ESTABLISH 77PS START-UP INSPECTION REQUIREMENTS	8/15
SET-UP 77PS SPC FILES	8/15

ref new - spec limit - Ref.

TEXAS INSTRUMENTS

Sheet No.

SAMPLE REPORT

PAGE 1 OF 1

(H)

REASON FOR REPORT		VENDOR		P.O.	PART NO.	REV.
NEW PART		Texas Instruments			57PSLS-3	(H)
REPLACEMENT TOOL.		REPORT REQ. BY	DATE	REPORTED BY	DATE	
CORRECTED TOOL.			4-5-91	D. Moynihan	4-5-91	
REPAIRED TOOL.						
REVIEW						
OTHER						

THE DIMENSIONS INDICATED BELOW REPRESENT TEXAS INSTRUMENTS' FINDINGS REGARDING THE ACTUAL VALUES FOR ALL CHARACTERISTICS MEASURED. IN CASES WHERE ACTUAL VALUES DEVIATE FROM THE SPECIFIED DIMENSIONS, THE DISPOSITION MAY INDICATE THE REQUIRED ACTION FOR EACH NON-CONFORMANCE IN THE APPROPRIATE COLUMN.

	(CIRCLE ALL OUT OF TOLERANCE DIMENSIONS)					DISPOSITION		
	SPEC	1	2	3	4	5	6	DATE
1	3.84 - 3.05	2.890	2.925	2.890	2.930	2.925	2.922	[illegible]
2	1.24 - 1.45	1.317	1.350	1.345	1.350	1.335	1.345	[illegible]

MARKS AND/OR INSTRUCTIONS

POSITION: TOOL APPROVED FOR PROD.		RESUBMISSION REQ'D
I. ENG.:	QRA ENG.:	
	PURCH. AGENT:	

TI-NHTSA 001808

TEXAS INSTRUMENTS

SAMPLE REPORT

PAGE 1 OF

REASON FOR REPORT		VENDOR	P.O.	PART NO.	REV.
NEW PART		Texas Instruments		57FSLS-3	H
REPLACEMENT TOOL		REPORT REQ. BY	DATE 4-5-91	INSPECTED BY D. Moyn-[illegible]	DATE 4-5
CORRECTED TOOL					
REPAIRED TOOL					
REVIEW					
OTHER					

THE DIMENSIONS INDICATED BELOW REPRESENT TEXAS INSTRUMENTS' FINDINGS REGARDING T ACTUAL VALUES FOR ALL CHARACTERIZED MEASURED. IN CASES WHERE ACTUAL VALUES DEVIA FROM THE SPECIFIED DIMENSIONS, THE DISPOSITION MUST INDICATE THE REQUIRED ACTION F EACH NON-CONFORMANCE IN THE APPROPRIATE COLUMN.

	(CIRCLE ALL OUT OF TOLERANCE DIMENSIONS)					DISPOSITION		
	SPEC	1	2	3	4	5	6	[illegible]
1.	2.94 - 3.05	2.990	2.985	2.990	2.990	2.993	2.993	TIR
2.	1.24 - 1.45	1.417	1.350	1.345	1.350	1.335	1.345	TIR

REMARKS AND/OR INSTRUCTIONS:

DISPOSITION: TOOL APPROVED FOR PROD.	RESUBMISSION REQ'D	TI-NHTSA 001809
MFG. ENG.:	QRA ENG.:	
	PURCH. AGENT:	

FORM NO. [illegible]

HIGHLIGHTS
Stephen B. Offiler
Week Ending 91-04-05

FORD MY'92 ELECTRONIC SPEED CONTROL DEACTIVATE PS

57PS & CUSTOMER ISSUES: 56 production 57PSL5-3's for Pitts' ISIR were expedited on Thursday, 91-04-04. This had been planned for 04-11, but apparently the urgency for these parts was miscommunicated. Several issues arose during the build which required the intervention of many individuals, including Matt Sellers, Jeff DiDomenico, Bob Robichaud, Dave Peripoli, Rusty Struble, and myself. Exactly 62 good parts were ultimately completed: 56 for Pitts and 6 for the Q.A. dimensional check. The major problem encountered was final crimp of the aluminum crimp ring. Serious burrs are still forming, and in general the crimp operation is visually poor and obviously out of control. We are still working to understand why this iteration caused so much difficulty. Mfg. Eng. is working on various angles on the precrimp tool and various heights of the crimp nest. At one point during the build, it was realized that the tools have no preload device to push the switch down onto the sensor; addition of urethane bumpers to perform this function seemed to help. Bob R. is planning to design spring-loaded preload devices into these tools. Also, Jeff has pointed out that in his experience a slotted precrimp tool (as used on Bendix APT to clear the connector key) makes a large improvement. We hypothesize that this is because crimp ring material is not forced to compress as it is moved inward; rather the slot gives material a place to go. We are looking into ways to prototype this concept.

Regarding the Tier-1 hydraulic testing, I have spoken with all three players. Gary Iannicilli of Dana-Weatherhead has given me his requirements, and I have requested that Jim Comins of Kelsey-Hayes and Jack Hutcheson of Pitts give me their requirements by Monday of next week. Our model shop will be building roughly three dozen parts with maximum J512 chamfer runout and another three dozen produced to "ideal" dimensions to represent best and worst case. We plan to charge the three Tier-1's accordingly for these.

We have reached the conclusion of the terminal position issue. Dave P. and Matt have been able to demonstrate significant improvements, and we can now hit 0.50 +/- 0.25 with a Cpk approaching 1.33. Ford has recognized our efforts, and granted a tolerance relaxation. We expedited SREA's for all four parts, and I am trying to expedite the 57PSL5-2 envelope print to George Randall because he has not entered it into his system yet, but needs it now. In order to issue the change request for this print, it was necessary to spend time to learn the Electronic Change Notice system.

As part of our efforts on the calibration specification experiment, I have learned that the Valentine 27713 cup and the model shop rebumped 27288 perform very similarly, which means that all our Pass-Car disc development efforts with rebumps will carry over to production.

77PS ISSUES: We have received the two TDR J512 chamfer gages. Matt and I did another R&R on both gages; results look good. Exercising the equations I've developed (using a Lotus spreadsheet) we've discovered that the latest Elco hexport submission looks good on the chamfer diameter but the angle is low, measuring 40.5 degrees against a spec. of 41-43. Furthermore, I have confirmed the accuracy of the gage readings of the angles by sectioning a part and measuring it myself.

We have finished calibrating all of our prototype 77PS switch assemblies, using the calibrator on the AMI with Mickey-Mouse'd nests and controls. Our results were much worse than the initial iterations with the calibrator stand-alone on a bench. Only about 32% of the parts fell into the target window. We have sorted the remainder, and should be able to use them by pinning individually. We have a total of 170 usable parts. The reasons why this iteration fared so poorly are definitely related to the fact that everything is just slapped together. We will continue with serious iteration when we have production-representative parts available and the calibrator is properly tied into the AMI mechanically and electrically, roughly 2-3 weeks.

We had a meeting with Steve Walters on the 46515 FAI (77PS production base mold). We are down to the point of working out details; making minor tool mod's and/or changing the prints as needed. The parts are looking quite good.

The 77PS test to check the slotted terminal prototypes and to experiment with slow vs. fast powered cycles for contact design reasons is progressing. We should be able to finish the powered cycles over the coming weekend and have results early next week.

HIGHLIGHTS
Stephen B. Offler
Week Ending 91-04-05

FORD MY'92 ELECTRONIC SPEED CONTROL DEACTIVATE PS

57PS & CUSTOMER ISSUES: 56 production 57PSL5-3's for Pitts' ISIR were expedited on Thursday, 91-04-04. This had been planned for 04-11, but apparently the urgency for these parts was miscommunicated. Several issues arose during the build which required the intervention of many individuals, including Matt Sellers, Jeff DiDomenico, Bob Rehichand, Dave Peripoli, Rusty Struble, and myself. Exactly 62 good parts were ultimately completed; 56 for Pitts and 6 for the Q.A. dimensional check. The major problem encountered was final crimp of the aluminum crimp ring. Serious burrs are still forming, and in general the crimp operation is visually poor and obviously out of control. We are still working to understand why this iteration caused so much difficulty. Mfg. Eng. is working on various angles on the preclimp tool and various heights of the crimp case. At one point during the build, it was realized that the tools have no preload device to push the switch down onto the sensor; addition of urethane bumpers to perform this function seemed to help. Bob R. is planning to design spring-loaded preload devices into these tools. Also, Jeff has pointed out that in his experience a slotted preclimp tool (as used on Bendix APT to clear the connector lug) makes a large improvement. We hypothesize that this is because crimp ring material is not forced to compress as it is moved inward; rather the slot gives material a place to go. We are looking into ways to prototype this concept.

Regarding the Tier-1 hydraulic seating, I have spoken with all three players. Gary Iannelli of Dana-Weatherhead has given me his requirements, and I have requested that Jim Cuccia of Kelsey-Hayes and Jack Hutchinson of Pitts give me their requirements by Monday of next week. Our model shop will be building roughly three dozen parts with maximum J512 chamfer runout and another three dozen produced to "ideal" dimensions to represent best and worst case. We plan to charge the three Tier-1's accordingly for these.

We have reached the conclusion of the terminal position issue. Dave P. and Matt have been able to demonstrate significant improvements, and we can now hit 0.50 +/- 0.25 with a Cpk approaching 1.33. Ford has recognized our efforts, and granted a tolerance relaxation. We expedited SREA's for all four parts, and I am trying to expedite the 57PSL5-2 envelope print to George Randall because he has not entered it into his system yet, but made it now. In order to issue the change request for this print, it was necessary to spend time to learn the Electronic Change Notice system.

As part of our efforts on the calibration specification experiment, I have learned that the Valentine 27713 cup and the model shop rebumped 27288 perform very similarly, which means that all our Pate-Car disc development efforts with rebumps will carry over to production.

77PS ISSUES: We have received the two TDR J512 chamfer gages. Matt and I did another R&R on both gages; results look good. Exercising the equations I've developed (using a Lotus spreadsheet) we've discovered that the latest Elco hoopert submission looks good on the chamfer diameter but the angle is low, measuring 40.5 degrees against a spec. of 41-43. Furthermore, I have confirmed the accuracy of the gage readings of the angles by sectioning a part and measuring it myself.

We have finished calibrating all of our prototype 77PS switch assemblies, using the calibrator on the AMI with Mickey-Mouse'd nests and controls. Our results were much worse than the initial iterations with the calibrator stand-alone on a bench. Only about 32% of the parts fell into the target window. We have sorted the remainder, and should be able to use them by pinning individually. We have a total of 170 usable parts. The reasons why this iteration fared so poorly are definitely related to the fact that everything is just slapped together. We will continue with serious iteration when we have production-representative parts available and the calibrator is properly tied into the AMI mechanically and electrically, roughly 2-3 weeks.

We had a meeting with Steve Walters on the 46515 FA1 (77PS production base mold). We are down to the point of working out details; making minor tool mod's and/or changing the prints as needed. The parts are looking quite good.

The 77PS test to check the slotted terminal prototypes and to experiment with slow vs. fast powered cycles for contact design reasons is progressing. We should be able to finish the powered cycles over the coming weekend and have results early next week.

TO: BILL SWEET
FM: MATT SELLERS
SJ: HIGHLIGHTS FOR W/E 4/05/91

77PS

TERMINAL POSITION UPDATE . . .STAKING TOOL RE-DESIGN EFFORTS HAVE NOW BEEN BROUGHT TO A CLOSE WITH INCREMENTAL IMPROVEMENT IN OUR TERMINAL POSITION CAPABILITY WITH ALL 57PS BASED PRODUCTS. LAST UPDATE ON PROGRESS HAD INDICATED THAT SIGMA VARIABILITY HAD BEEN REDUCED , BUT WITHOUT BEING ABLE TO CENTER THE MEAN TO THE SPEC. TOOL ITERATIONS HAVE NOW CENTERED THE MEAN AND MAINTAINED A REDUCED SIGMA VARIABILITY. CURRENT CAPABILITY IS +/-.010". ORIGINAL CAPABILITY WAS +/-.0315.

A DETAILED SUMMARIZATION OF THESE EFFORTS WERE PRESENTED TO FORD AND RESULTED IN AUTHORIZATION TO CHANGE THE ENVELOP TO +/-.010".

THE REVISED TOOL DESIGN HAS BEEN INCORPORATED INTO THE NEW CHRYSLER LH STAKING SYSTEM, AND WILL BE INCORPORATED INTO 77PS, 52PS, AND 76PS.

57PSL5-3 FORD PASS CAR . . . SHIPPED 56 DEVICES TO PITT'S OF TEXAS THURSDAY AFTERNOON. THIS WAS THE 1ST PRODUCTION LOT OF THESE DEVICES, AND SERVED TO SURFACE SEVERAL IMPROVEMENTS THAT NEED TO BE MADE STILL: ALUMINUM RING CODING, ALUMINUM RING CRIMPING, AND PRESSURE TESTER FIXTURING. ALL NEED TO BE GIVEN TOP PRIORITY DUE TO LARGE UPCOMING PRODUCTION ORDERS.

TDR HEXPORT GAUGES . . . TDR DELIVERED BOTH J512 HEXPORT GAUGING SYSTEMS TO T.I. THIS WEEK ALONG WITH HAND WRITTEN PRINTS. THE GAUGES HAVE PROVED TO BE EXCEPTIONAL WITH RESPECT TO CONSTRUCTION AND REPEATABILITY. CORRELATION TO SECTIONING MEASUREMENTS TECHNIQUES IS WITHIN 1/4 DEGREE. ELCO'S GAUGE WILL BE FORWARDED TODAY OR MONDAY.

FORCE DEFLECTION SPC GAUGING . . . A SYSTEM TO MONITOR PROCESS VARIATIONS WITH MOVABLE TERMINAL ASSEMBLY FORCE DEFLECTION HAS BEEN CONCEPTUALIZED AND WILL BE BROUGHT INTO USE BY TWO PATHS. ONE WILL BE TO HAVE DAVE P. BUILD A NESTING STATION TO BE USED ON AN EXISTING FORCE DEFLECTION GAUGE. THE OTHER WILL BE TO CONSULT WITH TDR & PRECISION PROD. TO QUOTE A STAND ALONE SYSTEM.

36900-1 J512 HEXPORT . . . ELCO SUBMITTED THERE FAI AND MCS DATA ON THIS PART. THE FAI WAS DONE PROPERLY AND IS CURRENTLY BEING CORRELATED. HOWEVER, THE MCS DATA WAS INADVERTENTLY PERFORMED ON UN-PLATED PARTS. ELCO FELT THIS WAS WHAT WE WOULD BE LOOKING FOR. WE HAVE HAD TO SHIP BACK 50 PIECES FROM A RECENT SHIPMENT SO THAT THEY COULD DUPLICATE THE STUDY ON PLATED PARTS.

ELCO REJECTIONS/POULSEN QUOTATIONS . . . SEVERAL REJECTIONS FOR CONTAMINATED AND OILY PARTS HAVE BEEN FOUND RECENTLY. ELCO CORRECTIVE ACTIONS HAVEN'T BEEN HEARD YET. SOME HAVE BEEN RTS, OTHERS HAVE BEEN US AS IS DUE TO PRODUCTION REQUIREMENTS AND LACK OF FUNCTIONAL CONCERN.

POULSEN HAS BEEN SLOW TO RESPOND TO QUOTATION REQUEST WITH THREE HEXPORTS. THEY ARE QUOTING A 52PS, 57PS AND 77PS HEXPORTS. MAYBE AN ELCO COMPETITOR?

BASE MOLD FAI RESULTS . . . AN FAI REVIEW MEETING THIS WEEK ON THE 46515 BASE MOLD RESULTED IN ACTION FOR BOTH PRECISION AND AFCC. A HANDFUL OF ISSUES WITH STEEL SAFE DIMENSIONS HAVE BEEN IDENTIFIED AS NEEDING CORRECTION. ANOTHER COUPLE OF ISSUES WILL BE HANDLED THROUGH PRINT REVISION WHERE ALLOWED BE ENVELOP REQUIREMENTS. RECOVERY SCHEDULE IS COMPLETION IN 1-1/2 WEEKS.

BASSLER TERMINALS . . . PROBLEMS WITH BOTH BASSLER TOOLS. THEY CANNOT MEET OUR TERMINAL TIP DIMENSIONAL REQUIREMENTS WITH THE CURRENT TOOL DESIGN. SEVERAL ITERATIONS HAVE BEEN TRIED WITH NO SUCCESS. MATERIAL GEOMETRY AFTER COINING CAN'T BE ADEQUATELY PREDICTED. A FEW STATION NOW HAVE TO BE ALTERED/REPLACED. ESSENTIALLY THE TIP WILL NOW HAVE TO BE TRIMMED TO DIMENSION. ABOUT $2000.00 PER TOOL BASSLER WILL EAT. RECOVERY SCHEDULE IS TWO WEEKS FOR THE STATIONARY AND AN ADDITIONAL WEEK BEYOND FOR MOVABLE. BASSLER WAS INSTRUCTED TO RUN OFF ENOUGH TERMINAL PRIOR TO TEAR DOWN TO SUPPORT DE-BUGS.

BASE CALIBRATOR STATUS . . . INSTALLED ON THE AMI AND WITH PROTOTYPE NEST AND PARTS THE CALIBRATOR IS BEHAVING TERRIBLE. BASE DIMENSIONS ARE ALL OVER THE PLACE VARYING AS MUCH AS .010"! PROBLEM ANALYSIS WILL BE AN IN-DEPTH STUDY. THEREFORE, WE HAVE PUT ADDITION CALIBRATOR EVAL'S ON HOLD UNTIL PRODUCTION MATERIAL IS AVAILABLE, (THREE WEEKS). AT THAT TIME WE WILL SEE IF THE PROBLEMS ARE RELATED TO THE PROTOTYPE SET-UP ALONE.

TERMINAL REEL ORDERS . . . BASSLER HAS TRIED OUT THE 63PS REELS WITH SUCCESS. THE TERMINALS SEEM TO REEL UP NICELY. WE ALSO FOUND OUT THAT ABOUT 15K PARTS CAN BE PUT ON EACH REEL. PREVIOUS PREDICTIONS WERE 4K TO 5K. DUE TO WEIGHT CONCERNS WE WILL HAVE TO LIMIT THE AMOUNT TO SOME QUANTITY.

ORDERS HAVE TO BE PLACED FOR REELS. WE WILL NEED ABOUT 25 REELS TO START. TOTAL BILL WILL BE $1400.00. CHARGES TO PC093?

EASTERN AUTOMATION PROGRESS . . . THEY WILL HAVE TO BE VISITED FOR A TOOLING REVIEW LATER THIS MONTH. MECHANIZATION AND MANUFACTURING ENG. SHOULD BE REPRESENTED. NEED FEEDBACK FROM YOU SO THAT PLANS CAN BE MADE IN ADVANCE.

CHRYSLER LH PROJECT

ALL TOOLS PROGRESSING ON SCHEDULE. DETAILED SCHEDULES WERE RECEIVED ON THE BASE MOLD AND ASSEMBLY TOOLING THIS WEEK, AND ARE SUPPORTING PROJECTED DUE DATES.

TOWNSEND WAS IN THIS WEEK TO REVIEW OUR REQUIREMENTS AND BEGIN THE QUOTE PROCESS. QUOTES ARE DUE NOT LATER THAN MONDAY. VERBAL QUOTE WAS OUT TO LUNCH, ($10K PER RIVETER), THEY WERE TOLD THAT WE ARE EXPECTING ABOUT $8K EACH.

MECHANIZATION HAS BEEN ASKED TO MAKE THE RIVETING TOOLS ADAPTABLE TO 52PS RIVETER'S. THIS WILL TAKE THE HEAT OFF PROCURING THE RIVETERS SO FAST. MARKETING SUPPORTS THIS ALSO.

KELSEY-HAYES GROUP

April 5, 1991
Revised April 6, 1991

James Cossins
Kelsey-Hayes Group
38481 Huron River Drive
Romulus, Michigan 48174

Steve Offiler
Texas Instruments
Mail Stop 13-29
34 Forest Street
Attleboro, MA 02703

Dear Steve,

In response to Bruce Pease's letter dated December 21, 1990, samples will be required with specific tolerances. The samples should have dimensions A, B, and C (see attached print) as close to the targets as possible and all other dimensions must be within the specified limits.

	Qnty.	P/N	Dim A	Dim B	Dim C dia.
I.	7	F2VC-9F924-BA	(.183) 4.64	(.046) 1.18	(.194) 5.85
II.	7	F2VC-9F924-BA	(.188) 4.66	(.048) 1.48	(.194) 5.85
III.	7	F2VC-9F924-BA	(.187) 4.39	(.046) 1.48	(.187) 5.60" 5.50

When the pressure switches are submitted please serialize the samples and provide list of dimensions A-C for each switch.

The order will be submitted to Joe Schank through the Kelsey-Hayes prototype department immediately.

Sincerely,

James Cossins

TI-NHTSA 001817

TEXAS INSTRUMENT INCORPORATED
FORD CCPS MY93 L/T PRICE QUOTATION

INTRODUCTION/PURPOSE

- WITH MY92, FORD BEGINS CONVERSION FROM A VACUUM BASED TO AN ELECTRONIC BASED CRUISE CONTROL SYSTEM.
- TI HAS ALREADY SECURED MY92 BUSINESS.
- THIS PROPOSAL IS IN RESPONSE TO A FORD REQUEST FOR PIECE PRICE ON MY93 L/T (EXPECTED VOLUME 550K - 660K).
- WE EXPECT P/C TO FOLLOW VERY SOON WITH AN RFQ OF THEIR OWN FOR MY93.
- TI GOAL IS TO USE THIS PROPOSAL TO SECURE ALL MY93 CCPS BUSINESS.

TI-MHTSA 001010

TEXAS INSTRUMENT. INCORPORATED
FORD CCPS MY93 L/T PRICE QUOTATION

BACKGROUND/HISTORY

- TI FIRST ENGAGED WITH FORD ON THIS PROGRAM IN 1987.
- TI HAS BEEN INVOLVED AS SOLE SUPPLIER IN DEVELOPING PRODUCT WITH FORD ENGINEERING.
- INITIAL ENGAGEMENT TARGETED THE FOLLOWING COST GOALS (HANDED DOWN BY FORD).
  - PIECE PRICE: $1.75 - $1.90
  - TOOLING COST: $700K - $900K
- EVOLUTION OF PRODUCT LED TO TI SECURING MY92 BUSINESS AT THE FOLLOWING COSTS:
  - PIECE PRICE: $2.21
  - TOOLING COST: $1320K

11 APR 91 CD/DAA 050-0175

TEXAS INSTRUMENTS INCORPORATED
FORD CCPS MY93 L/T PRICE QUOTATION

CURRENT STATUS

- BECAUSE OF TIMING DELAYS ON PART OF FORD IN RELEASING TOOLING FUNDS, TI WILL START MY92 PRODUCTION WITH MODIFIED VERSION OF 57PS.
- RUNNING CHANGE WILL BE MADE TO 77PS NO SOONER THAN 3 MONTHS AFTER START OF PRODUCTION (FORD RULES).
- INTERNAL OBJECTIVE TO BE CAPABLE OF RUNNING 57PSL TYPE DEVICES (POWER STEERING) ON CCPS AUTOMATED TOOLING BY MY93 (CURRENTLY ONLY SEMI-AUTOMATED).

TI-NHTSA 001820

TEXAS INSTRUMENT INCORPORATED
FORD CCPS MY93 L/T PRICE QUOTATION

COMPETITION

- o RFQ BEING SENT TO TI ONLY.
  - WITH NEW PROGRAMS, WHEN NEW PLATFORMS ARE ADDED, FORD SENDS OUT AN RFQ AS A MATTER OF POLICY.
  - EVEN THOUGH WE HAD A MY92 CCPS AGREEMENT, WE STILL RESPONDED TO RFQ'S FOR EACH PLATFORM USING CCPS.
- o HYSTAT WILL BE A COMPETITOR IN FUTURE.
  - MOST LIKELY MY94/95 TIME FRAME WHEN P/C GROUP MOVES CCPS FROM PROP VALVE TO MASTER CYLINDER.
  - PLAN TO BEGIN ADDRESSING THIS ISSUE SERIOUSLY DURING LATE 3Q91/EARLY 4Q91 (I.E. ONCE WE HAVE ASSURED A SMOOTH PRODUCTION START).
- o AS A RESULT OF PRESSURE SWITCH COMMODITY TEAM, FOLLOWING COMPETITORS WILL BE DROPPED AT FORD (NAAO).
  - G.E.
  - TOD
  - ROBERT SHAW

11 APR 91 CD/DAA 050-0175

T-MHTSA 001821

TEXAS INSTRUMENTS INCORPORATED
FORD CCPS MY93 L/T PRICE QUOTATION

TI STRATEGY/OBJECTIVE

- PROVIDE A PIECE PRICE CONSISTENT WITH EXPECTATIONS UNDER CURRENT AUTOMOTIVE ECONOMIC CLIMATE WHILE AT THE SAME TIME MAINTAINING/ IMPROVING LEVEL OF GPN.
  - GOAL IS TO SECURE A THREE-YEAR EXTENSION IN AN EXPEDITIOUS MANNER.
  - WILL LOCK OUT COMPETITION THROUGH MY95 (MYSTAT OFFERING UNSOLICITED QUOTES).
- IF LONG-TERM AGREEMENT CANNOT BE REACHED AT TERMS FAVORABLE TO TI, WILL FALL BACK TO SECURING MY93 EXTENSION ALONE (AT THE PRESENT TIME).
  - CUSTOMIZED FEATURES OF MEXPORT GIVE TI A COMPETITIVE ADVANTAGE.

11 APR 91 CD/DAA 050-0175

TI-MNTSA 001822

TEXAS INSTRUMENT INCORPORATED
FORD CCPS MY93 L/T PRICE QUOTATION

RECOMMENDATIONS

- MAINTAIN MY92 PIECE PRICE OF $2.21 FOR MY93.
  - REPRESENTS GPM OF 30+% DURING SECOND YEAR OF PRODUCT LIFE CYCLE.
  - AVOIDS ANY UNNECESSARY COMPETITION AT THIS POINT IN PROGRAM.
- USE OPPORTUNITY AS A BASIS FOR QUOTING MULTI-YEAR EXTENSION.
  - ELIMINATE HYSTAT THREAT THROUGH MY95.

11 APR 91 CD/DAA 050-0175

TI-HITSA 001823

TEXAS INSTRUMENTS INCORPORATED
FORD CCPS MY93 L/T PRICE QUOTATION

ANALYSIS SUMMARY

ITEM	MY93 $
EAU (K)	550
ASP ($)	$2.21
TOTAL COST ($)	$1.46
N.R. ($K)	$1216
GPM (%)	33.9%
D&A (%)	17.8%
ORG. PFT. (%)	16.1%
GPM ($K)	$412
ORG. PFT. ($K)	$196
PAT ROA (%)	14.5%

11 APR 91 CD/DAA 050-0175

TI-NHTSA 001824

INITIAL SAMPLE WARRANT

No. 121394

PART INFORMATION

Part Name: NEXT GENERATION SPEED CONTROL Part Number: F2VC-9F924-AB

Control Item: [X] Yes [ ] No Engineering Change Level: G Date: 4-11-91

Engineering Change Authorization: ~~BRUCE BEASE~~ Date:

Shown on Drawing No.: F2VC-9F924-AB Part Weight: 062 lb

Reason for Initial Sample:

- [ ] Initial Submission
- [ ] Engineering Change(s)
- [ ] Tooling Transfer
- [ ] Other – Please Specify: SEE BELOW
- [ ] Change in Optional Construction or Material
- [ ] Additional, Replacement, or Refurbished Tooling
- [X] Correction of Discrepancy (Resubmission No. ____)
- [ ] Process Change
- [ ] Change in Subcontractor or Source
- [ ] Parts Produced at Additional Location

SUPPLIER INFORMATION (Manufacturing Location)

Supplier Name: TEXAS INSTRUMENTS Street Address: 34 FOREST STREET

City: ATTLEBORO State: MA Postal Code: 02703 Country: USA

Supplier Mfg. Location Code – DUNS: T097K Customer Assigned: FORD MOTOR CO - EED

CUSTOMER INFORMATION

Customer Name: FORD MOTOR CO - EED Buyer: FRED HENDERSHOT Buyer Code: 185

Purchase Order Number: Sample Acceptance Level: 2

Application: NEXT GENERATION SPEED CONTROL

RESULTS

The results for dimensional measurements [X], material tests [X], and functional (EE) tests [X] meet all drawing and specification requirements. [X] Yes [ ] No

Submission Checklist

- [ ] Checked Print
- [ ] Auxiliary Drawings/Sketches
- [ ] Correct Number of Samples
- [X] Dimensional Results
- [ ] Material Test Results
- [ ] Certifications
- [ ] Functional (EE) Test Results
- [ ] Product Engineering Approval
- [ ] Control Plan
- [ ] Process Capability Results
- [ ] Process Flow Diagram
- [ ] Gage (Measurement) Studies

Supporting data for all requirements are available upon request.

COMMENTS:

ISR SUPPLEMENT WITH ADDITIONAL TESTING TO CLOSE OUT ALERT NO. A1C166193;

ALSO, CORRECTED GOLD DIMENSIONS. PART PREVIOUSLY APPROVED ON ISR # 112394 DATED 9/27/91

DECLARATION

I affirm that the samples identified by this warrant are representative of our parts and have been made to the applicable customer drawings and specifications from specified materials, on regular production tooling with no operations other than the regular production process.

Authorized Signature: JW Watt Date: 12/20/91

Print Name: JIM WATT Title: QA ENGINEER Phone No.: 508-699-2719

Approval (when required): [X] Approved [ ] Rejected

Signature: [redacted] Date: 1/14/92

Form 2926 Supplier of Materials 304

TI-NHTSA 001825

TEXAS INSTRUMENTS

Ford Motor Company
17000 Oakwood Blvd.
P.O. Box 1586-D-2015
Dearborn, Michigan 48121

January 10, 1992

Attn: Mr. Mark Scholler

Subj: ISIR Submission (Component Material Change)
Ford Part Number F2VC-9F924-AB
Pass Car Series

Ref: SREA No. 147671

Dear Mark,

Enclosed, please find our ISIR submission to document the environmental seal material change for the NOSC deactivation switch, Ford part number F2VC-9F924-AB. The submission includes a copy of the approved Supplier Request For Engineering Approval (SREA) no. 147671.

Please let me know if you have any questions or if I may be of any further assistance.

Regards,

Jim Watt
QRA Engineer
Precision Controls Department
Control Products Division

cc: Dave Czarn, MS 12-29; Charlie Douglas, MS 12-33
Andy McGuirk, MS 12-27
Steve Majors, TI Farmington Hills, Michigan

encl: ISIR submission

TEXAS INSTRUMENTS INCORPORATED • 34 FOREST STREET • ATTLEBORO, MA 02703
508-699-3800 • TELEX 910001 • CABLE TEXINS

INITIAL SAMPLE WARRANT

No. 112384

PART INFORMATION

Part Name: Next Generation Speed Control Part Number: F2VC-9F924-AB

Control Item ☐ Yes ☐ No Engineering Change Level _____ Date _____

Engineering Change Authorization: Bruce Pagge Date _____

Shown on Drawing No.: F2VC-9F924-AB Part Weight: .062 lb

Reason for Initial Sample:

- ☐ Initial Submission
- ☐ Engineering Change(s)
- ☐ Tooling Transfer
- ☐ Other – Please Specify _____
- ☒ Change in Optional Construction or Material
- ☐ Additional, Replacement, or Refurbished Tooling
- ☐ Correction of Discrepancy (Resubmission No. _____)
- ☐ Process Change
- ☐ Change in Subcontractor or Source
- ☐ Parts Produced at Additional Location

SUPPLIER INFORMATION (Manufacturing Location)

Supplier Name: Texas Instruments Inc. Street Address: 34 Forest Street

City: Attleboro State: Ma Postal Code: 02703 Country: USA

Supplier Mfg. Location Code – DUNS: 7097K Customer Assigned: Ford Motor Co. – EED

CUSTOMER INFORMATION

Customer Name: Ford Motor Co. – EED Buyer: Fred Ramdersbet Buyer Code: 165

Purchase Order Number _____ Sample Acceptance Level _____

Application: Next Generation Speed Control

RESULTS

The results for dimensional measurements ☐, material tests ☐, and functional (ES) tests ☐ meet all drawing and specification requirements ☐ Yes ☐ No

Submission Checklist

- ☐ Checked Print
- ☐ Auxiliary Drawings/Sketches
- ☐ Correct Number of Samples
- ☐ Dimensional Results
- ☒ Material Test Results
- ☐ Certifications
- ☐ Functional (ES) Test Results
- ☐ Product Engineering Approval
- ☐ Control Plan
- ☐ Process Capability Results
- ☐ Process Flow Diagram
- ☐ Gage (Measurement) Studies

Supporting data for all requirements are available upon request.

COMMENTS:

Submission due to change of environmental seal material composition and copy of area is attached.

DECLARATION

I affirm that the samples represented by this warrant are representative of our parts and have been made to the applicable customer drawings and specifications from specified materials, on regular production tooling with no operations other than the regular production process.

Authorized Signature: Jim Watt Date: 9 Jan 92

Print Name: Jim Watt Title: QA Engineer Phone No.: 508-699-1719

APPROVAL (when required by customer procedure) ☐ Approved ☐ Rejected

Signature _____ Date _____

Form 292c

No. 147671

Supplier Request for Engineering Approval

DATE November 5 19 91

SUPPLIER TO COMPLETE

SUPPLIER NAME AND ADDRESS

Texas Instruments Incorporated, 34 Forest Street, Attleboro, MA 02703

FORD AND/OR SUPPLIER PART NAME AND PART NUMBER OF ASSEMBLY AND ITS COMPONENTS

SWITCH ASY - SPEED CONTROL DEACTIVATE

(delta) F2VC-9F924-AB

☐ YES ☒ NO

☐ YES ☒ NO

CHANGE: ☐ DESIGN ☒ COMPOSITION ☐ PROCESSING DESCRIPTION

The proposed change involves use of a blue-colored environmental seal in place of the present seal, which is reddish in color with a black stripe on its outer circumference. The blue seal is identical in dimensions and material, except for pigmentation. Presently, only the black stripe differentiates the pass-car seal, which has slightly different dimensions from other similar seals.

EFFECT OF CHANGE

No effect on device performance or cost. Benefit is reduced possibility of assembly error.

INTERCHANGEABILITY AFFECTED
ASSEMBLY ☐ YES ☒ NO
COMPONENTS ☐ YES ☒ NO

TOOLING OR FACILITY CHANGES REQUIRED ☐ YES ☒ NO
IF YES, COST EFFECT $

TIME TO INCORPORATE CHANGE AFTER APPROVAL
Approx. 4-6 weeks.

PIECE COST AFFECTED ☐ YES ☒ NO
IF YES, COST EFFECT $

WILL INCORPORATION OF CHANGE AFFECT SHIPPING SCHEDULE? ☐ YES ☒ NO

SIGNATURE [signature] 91105

PRODUCT ENGINEERING TO COMPLETE

PCR IN PROCESS ☒ APPROVED ☐ REJECTED BY D.F. Pesa DATE 9 11 06

CONCURRED BY [signature] DATE 11/6/91

BLANKET APPROVAL GRANTED FOR SUBSEQUENT CHANGES WHICH ARE SAME AS DESCRIBED ABOVE ☐ YES ☒ NO

SERIALS OF CHANGED COMPONENT REQUIRED ☐ YES ☒ NO

REASON FOR REJECTION OR QUALIFYING CONDITIONS OF ACCEPTANCE

* This approval is granted upon the understanding that it is advisory in nature and in no manner changes the Seller's original responsibility for insuring that all characteristics, designated in the applicable engineering specifications and/or inherent in samples as originally tested and approved, are maintained. Seller accepts full responsibility for the changes or types of changes listed above, and should such changes result in less satisfactory performance than experienced with the originally approved item, Seller will fully reimburse the Buyer for all expenses incurred to correct the deficiency.

TEXAS INSTRUMENTS

Ford Motor Company
17000 Oakwood Blvd.
P.O. Box 1586-D-2015
Dearborn, Michigan 48121

December 20, 1991

Attn: Mr. Mark Scholler

Subj: Supplemental ISR Submission
Ford Part Number F2VC-9F924-AB
Pass Car Series

Ref: Initial ISR Submission

Dear Mark,

Enclosed, please find our supplemental sample warrant for NGSC deactivation switch, Ford part number F2VC-9F924-AB. The warrant includes reference to the alert no. A10166193 providing conditional approval of switches utilizing manually crimped parts.

A copy of the supplemental ISR testing addressing diaphram life during impulse testing. PIST information is also enclosed. Finally, (8) samples of bases with the corrected 1.88 - 2.04 base cavity mold dimension are enclosed.

Please let me know if you have any questions or if I may be of any further assistance.

Regards,

Jim Watt
QRA Engineer
Precision Controls Department
Control Products Division

cc: Dave Czarn, MS 12-29; Charlie Douglas, MS 12-33
Andy McGuirk, MS 12-27
Steve Majors, TI Farmington Hills, Michigan

encl: ISR Supplement, ISR Warrant, Sample corrected bases

INITIAL SAMPLE WARRANT

No. 112384

PART INFORMATION

Part Name: NEXT GENERATION SPEED CONTROL Part Number: F2VC-9F924-AB

Control Item ☐ Yes ☐ No Engineering Change Level _____ Date _____

Engineering Change Authorization: BRUCE PEASE Date _____

Shown on Drawing No.: F2VC-9F924-AB Part Weight: 062 lb

Reason for Initial Sample:

- ☐ Initial Submission
- ☐ Engineering Change(s)
- ☐ Tooling Transfer
- ☐ Other – Please Specify: SEE BELOW
- ☐ Change in Optional Construction or Material
- ☐ Additional, Replacement, or Refurbished Tooling
- ☒ Correction of Discrepancy (Resubmission No. _____)
- ☐ Process Change
- ☐ Change in Subcontractor or Source
- ☐ Parts Produced at Additional Location

SUPPLIER INFORMATION (Manufacturing Location)

Supplier Name: TEXAS INSTRUMENTS Street Address: 34 FOREST STREET

City: ATTLEBORO State: MA Postal Code: 02703 Country: USA

Supplier Mfg. Location Code – DUNS: TG97K Customer Assigned: FORD MOTOR CO - EED

CUSTOMER INFORMATION

Customer Name: FORD MOTOR CO - EED Buyer: FRED HENDERSHOT Buyer Code: 165

Purchase Order Number _____ Sample Acceptance Level _____

Application: NEXT GENERATION SPEED CONTROL

RESULTS

The results for dimensional measurements ☐, material tests ☐, and functional (ER) tests ☐ meet all drawing and specification requirements ☐ Yes ☐ No

Submission Checklist

- ☐ Checked Print
- ☐ Auxiliary Drawings/Sketches
- ☐ Correct Number of Samples
- ☐ Dimensional Results
- ☐ Material Test Results
- ☐ Certifications
- ☒ Functional (ER) Test Results
- ☐ Product Engineering Approval
- ☐ Control Plan
- ☐ Process Capability Results
- ☐ Process Flow Diagram
- ☐ Gage (Measurement) Studies

Supporting data for all requirements are available upon request.

COMMENTS:

ISR SUPPLEMENT WITH ADDITIONAL TESTING TO CLOSE OUT ALERT NO. A10106193;

ALSO, CORRECTED BASE MOLD DIMENSIONS.

DECLARATION

I affirm that the samples represented by this warrant are representative of our parts and have been made to the applicable customer drawings and specifications from specified materials, on regular production tooling with no operations other than the regular production process.

Authorized Signature: Jim Watt Date: 12/20/91

Name: JIM WATT Title: QA ENGINEER Phone No.: 508-699-1719

APPROVAL (when required by customer procedure) ☐ Approved ☐ Rejected

Signature _____ Date _____

Form 292c

CORRECTED MOLD DIMENSIONS

F2VC-9F924-AB

CAVITY #	SPEC. 2.06 - 1.85
A1	1.92
A	1.94
B1	1.985
B	1.99
C1	1.985
C	2.00
D1	1.99
D	1.975

cc = Elvira R.

TEXAS INSTRUMENTS

Ford Motor Company
17000 Oakwood Blvd.
P.O. Box 1586-D-2015
Dearborn, Michigan 48121

December 04, 1991

Attn: Mr. Mark Scholler

Subj: Initial ISR Submission
Ford Part Number F2VC-9F924-AB
Pass Car Series

Ref: My December 04, 1991 Telephone Call

Dear Mark,

Enclosed, please find our subsequent initial sample warrant for NGSC deactivation switch, Ford part number F2VC-9F924-AB. The warrant includes reference to the alert no. A10166193 providing conditional approval of switches utilizing manually crimped parts.

A copy of the referenced alert is also enclosed for your information.

Please let me know if you have any questions or if I may be of any further assistance.

Regards,

Jim Watt
QRA Engineer
Precision Controls Department
Control Products Division

cc: Dave Czarn, MS 12-29; Charlie Douglas, MS 12-33
Andy McGuirk, MS 12-27
Steve Majors, TI Farmington Hills, Michigan

encl: Alert no. A10166193
Initial Sample Warrant

INITIAL SAMPLE WARRANT

No. 112384

PART INFORMATION

Part Name: NEXT GENERATION SPEED CONTROL Part Number: F2VC-9F924-AB

Control Item ☐ Yes ☐ No Engineering Change Level _____ Date _____

Engineering Change Authorization: Bruce Pease Date _____

Shown on Drawing No.: F2VC-9F924-AB Part Weight: .062 kg

Reason for Initial Sample:

- ☐ Initial Submission
- ☐ Engineering Change(s)
- ☐ Tooling Transfer
- ☐ Other – Please Specify _____
- ☐ Change in Optional Construction or Material
- ☐ Additional, Replacement, or Refurbished Tooling
- ☐ Correction of Discrepancy (Reauthorization No. _____)
- ☐ Process Change
- ☐ Change in Subcontractor or Source
- ☐ Parts Produced at Additional Location

SUPPLIER INFORMATION (Manufacturing Location)

Supplier Name: Texas Instruments Inc. Street Address: 34 Forest Street

City: Attleboro State: MA Postal Code: 02703 Country: USA

Supplier Mfg. Location Code – DUNS: 1097K Customer Assigned: Ford Motor Co. EED

CUSTOMER INFORMATION

Customer Name: Ford Motor Co. EED Buyer: Fred Sondershot Buyer Code: 165

Purchase Order Number _____ Sample Acceptance Level _____

Application: Next GenerationSpeed Control

RESULTS

The results for dimensional measurements ☐, material tests ☐, and functional (EE) tests ☐ meet all drawing and specification requirements ☐ Yes ☐ No

Submission Checklist

- ☒ Checked Print
- ☐ Auxiliary Drawings/Sketches
- ☒ Correct Number of Samples
- ☒ Dimensional Results
- ☒ Material Test Results
- ☒ Certifications
- ☒ Functional (EE) Test Results
- ☐ Product Engineering Approval
- ☐ Control Plan
- ☐ Process Capability Results
- ☐ Process Flow Diagram
- ☐ Gage Measurements Studies

Supporting data for all requirements are available upon request.

COMMENTS:

Condition[redacted] manually enlarged parts as detailed in Alert [redacted] (attached) Initial EEE Submission 9/26/91

DECLARATION

I affirm that the samples represented by this warrant are representative of our parts and have been made to the applicable customer drawings and specifications from specified materials, on regular production tooling with no operations other than the regular production process.

Authorized Signature: Jim Watt Date: 12/4/91

Print Name: Jim Watt Title: QA Engineer Phone No.: 508-699-1719

APPROVAL (when required by customer procedure) ☐ Approved ☐ Rejected

Signature _____ Date _____

Quality Doc. No. 292c

TI-NHTSA 001833

Continue auto
FR: J Sinck
SJ: Jagd Passon Mark

ALERT DETAIL

PRINT DATE/TIME: 91/10/11 09:39
PAGE:

ALERT NUMBER: A10164195

ORIGIN ACTIVITY: NC00 CHASSIS PEO (LNCS)
ORIGINATOR: PEASE, B. F.
CPSC: 060605

TYPE: (N) USE PPM
DATE: 91/10/02
PHONE: 32-37935
NOTICE NO:

STATUS: A
LOCATION: RN 3001, OLD605, D
RESOLVING NOTICE:

ALERT DESC: PERMIT TEXAS INSTRUMENTS TO SHIP SPEED CONTROL REDUNDANT DEACTIVATION SWITCH, F2VC-9F924-AB, WITH EXCEPTION TO THE INTENDED MANUFACTURING/ASSEMBLY PROCESS CONSISTING OF

PRODUCTS AFFECTED: 1992 LINCOLN TOWN CAR, CROWN VICTORIA, GRAND MARQUIS WITH NEW GENERATION SPEED CONTROL.

MODEL CODES: CVFA CVFM CVWB
PLANTS AFFECTED: NA17
MFG CONCERN CNTRL:
PROGRAM:
QTY:
EST INCRN VAR COST: -6.92
EST INCRN VWB COST:
UNIT MEASURE:
SUPP SOCE:

MODEL YEAR: 92
END CONCERN CNTRL:
EFFECTIVE IN:
TIME: 900
DIVISION CODE: 000
EST INCRN TOOL COST: 0
EST INCRN FAC COST: 0
APPEARANCE:

INVALID:
OUT:
DISP: U
EST INCRN LBR COST: 0.00
WT EFFECT: 0.0000

AFFECTED PARTS

AFF PART NO:
CPSC: 060605
ACT:
INTER:
AFF PART DESC:
NOTICE:
SUPPLY/LOCAL:
SUPPLIER:
AVAIL:
REL IND: N
FUNC REQD:

FURTHER DESCRIPTION/ALERT RESOLUTION/REASON FOR REJECTION ETC.

USERID: DFP2400
ALERT DESC:
ACTIVITY: NC00 ENTRY DATE: 91/10/02

USING A MANUALLY LOADING SENSOR CRIMPING MACHINE VERSUS THE AUTOMATIC IN LINE LOADED CRIMPER. THE AUTOMATIC CRIMPER HAS BEEN DETERMINED TO HAVE A YET TO BE DEFINED DEFICIENCY THAT RESULTS IN PART FAILURE TO MEET THE REQUIRED NUMBER OF CYCLE IN THE IMPULSE TEST. THE SUPPLIER IS GIVEN A 90 DAY PERIOD TO RESOLVE THE ISSUE. THE MANUALLY CRIMPED PARTS PASS THE CO TEST. THIS DEVIATION PERMITS INCORPORATION OF THE -AB LEVEL SWITCH AND DELETION OF THE INTERIM -DB SWITCH FOR A COST REDUCTION OF 5.92. THE -AB SWITCH IS PIA TO END ITEM

USERID: DFP2400
ALERT DESC:
ACTIVITY: NC00 ENTRY DATE: 91/10/02

PROPORTIONING VALVES F2AC-28091-BA, F2VC-28091-CC, AND JUNCTION BLOCK F2AC-26320-CB.

USERID: LA20484
ALERT DESC:
ACTIVITY: NC00 ENTRY DATE: 91/10/04

OK. SUPVR. APPROVAL REQ'D. IF PRVES IS AFFECTED. LA2

USERID: 8205348
ALERT DESC:
ACTIVITY: NC00 ENTRY DATE: 91/10/04

-DONE-

TI-NHTSA 001834

TEXAS INSTRUMENTS

Ford Motor Company
17000 Oakwood Blvd.
P.O. Box 1586-D-2015
Dearborn, Michigan 48121

September 27, 1991

Attn: Mr. Mark Scholler

Subj: Initial ISR Submission
Ford Part Number F2VC-9F924-AB
Pass Car Series

Ref: My September 20, 1991 Telephone Call

Dear Mark,

Enclosed, please find our initial ISR submission for the NGSC deactivation switch, Ford part number F2VC-9F924-AB. The submission includes complete product validation testing which is enclosed with the documentation.

We noted one discrepancy during the dimensional analysis. Dimension 1.[illegible] - 2.[illegible] was inadvertantly transferred in error from the envelope drawing to the component drawing, resulting in the one out of dimension measurement (2.699). Sample bases with the corrected dimension will be forwarded to you within three weeks.

We noted that the pass car print does not indicate any significant characteristics, and therefore, no PIST/PIPC data is required. However, we intend to provide PIST/PIPC data on actuation, release, and thread specifications similar to what was provided on the [illegible] ISIR submission, and forward the data to you.

Please let me know if you have any questions or if I may be of any further assistance.

Regards,

Jim Natt
QRA Engineer
Precision Controls Department
Control Products Division

cc: Dave Czarn, MS 12-29; Charlie Douglas, MS 12-33
Andy McGuirk, MS 12-27
Joe Schuck, TI Farmington Hills, Michigan

encl: ISIR submission

TEXAS INSTRUMENTS INCORPORATED • 34 FORBES STREET • ATTLEBORO, MA 02703
508-699-3000 • TELEX 95-7709 TWX 710-346-0505 • CABLE TEXINS

INITIAL SAMPLE WARRANT

No. 112384

PART INFORMATION

Part Name: NEXT GENERATION SPEED CONTROL DEACTIVATION PRESSURE SWITCH Number: F2VC-9F924-AB

Control Item ☐ Yes ☐ No Engineering Change Level _____ Date _____

Engineering Change Authorization: Bruce Pease Date _____

Shown on Drawing No.: F2VC-9F924-AB Part Weight: .062 lb

Reason for Initial Sample:

- ☒ Initial Submission
- ☐ Engineering Change(s)
- ☐ Tooling Transfer
- ☐ Other – Please Specify _____
- ☐ Change in Optional Construction or Material
- ☐ Additional, Replacement, or Refurbished Tooling
- ☐ Correction of Discrepancy (Resubmission No. ____)
- ☐ Process Change
- ☐ Change in Subcontractor or Source
- ☐ Parts Produced at Additional Location

SUPPLIER INFORMATION (Manufacturing Location)

Supplier Name: TEXAS INSTRUMENTS Street Address: 34 Forest St.

City: Attleboro State: Mass. Postal Code: 02703 Country: USA

Supplier Mfg. Location Code – DUNS: T097K Customer Assigned: Ford Motor Co. EED

CUSTOMER INFORMATION

Customer Name: FORD MOTOR CO. EED Buyer: Fred Hendershot Buyer Code: 165

Purchase Order Number _____ Sample Acceptance Level _____

Application: NEXT GENERATION SPEED CONTROL

RESULTS

The results for dimensional measurements ☐, material tests ☐, and functional (ES) tests ☐ meet all drawing and specification requirements ☐ Yes ☐ No

Submission Checklist

- ☒ Checked Print
- ☐ Auxiliary Drawings/Sketches
- ☒ Correct Number of Samples
- ☒ Dimensional Results
- ☒ Material Test Results
- ☒ Certifications
- ☒ Functional (ES) Test Results
- ☐ Product Engineering Approval
- ☒ Control Plan
- ☒ Process Capability Results
- ☒ Process Flow Diagram
- ☒ Gage (Measurement) Studies

Supporting data for all requirements are available upon request.

COMMENTS:

_____

_____

DECLARATION

I affirm that the samples represented by this warrant are representative of our parts and have been made to the applicable customer drawings and specifications from specified materials, on regular production tooling with no operations other than the regular production process.

Authorized Signature: Jim Watt Date: 9/26/91

Print Name: JIM WATT Title: QRA Eng. Phone No.: 508-699-1719

APPROVAL (when required by customer procedure) ☐ Approved ☐ Rejected

Signature _____ Date _____

Form No. 292c

TI-NHTSA 001636

Initial Sample Report – Dimensional

No. 112384

Page ____ of ____

TO BE COMPLETED BY SUPPLIER

SUPPLIER: Texas Instruments, Attleboro, Ma.	LOCATION CODE: T097K		PART NUMBER: F2VC-9F924-AB
BUYER: Fred Hendershot	BUYER CODE: 165	FORD COMMODITY CODE: EEU	NO. OF SAMPLES: 8
PRODUCT CHANGE CONSIDERED (CONTROL ITEM: ▽)	YES ☐ NO ☒		

REASON FOR SAMPLES

NEW PART ☒ CHANGED PART ☐ NEW LOCATION ☐ NEW TOOLS ☐ MULTIPLE CAVITY DIES ☐

PART NAME: Next Generation Speed Control Deactivation Pressure Switch

SIP DATE: 4/17/91

MODEL YEAR AND PRODUCT LINE:

DO PROGRAM PRICING ☐

AUTHORIZED DEVIATION NO: N/A

SAMPLE MADE ON PRODUCTION SET-UP AND TOOLS: YES ☐ NO ☐

ADDITIONAL HAND OR TOOL ROOM WORK PERFORMED: YES ☐ NO ☐

WE HEREBY CERTIFY THE INSPECTION RESULTS BELOW ARE CORRECT AND THAT OUR SAMPLE MEETS FORD MOTOR COMPANY SPECIFICATIONS

SAMPLES MADE TO SIP DATED: 4/17/91

DATE INSPECTED: 9/20/91

SIGNATURE OF RESPONSIBLE OFFICIAL: Jim Hall

TITLE: QRA Eng.

DATE: 9/26/91

CHARACTERISTIC DIMENSION OR SPECIFICATION	CLASS* ▽		SUPPLIER INSPECTION RESULTS	CONSUMER VERIFICATION OF INSPECTION RESULTS	PROCESS CAPABILITY STUDY REQUIRED	PROCESS CAPABILITY STUDY COMPLETED
FAI RESULTS RECORDED ON TI FORMAT						

TO BE COMPLETED BY CONSUMER

DISPOSITION	SERIAL NO.	APPROVED	REJECTED	NOT RECD.				
DIMENSIONAL SIP DATED	XXXX				INSPECTION AND TESTING INSTRUCTIONS APPROVED	YES ☐ NO ☐	SPECIAL GAGES APPROVED	YES ☐ NO ☐ NOT REQ'D ☐
					INITIAL SAMPLE APPROVAL MUST BE SUPPLEMENTED BY APPROVAL OF FIRST PRODUCTION SHIPMENT	YES ☐ NO ☐	CONTROL PLAN APPROVED	YES ☐ NO ☐ NOT REQ'D ☐
MATERIAL TEST 375a FORM					APPROVED BY STYLING	YES ☐ NO ☐ NOT REQ'D ☐	APPROVED BY FORD ENGINEERING	YES ☐ NO ☐ NOT REQ'D ☐
ED TEST 844 FORM					DIVISION		AUTHORIZED SIGNATURE	DATE

Ford Qual Supt 292a

*DESIGNATED CHARACTERISTIC CLASS
▽ – CONTROL ITEM

COPY 1

TI-NHTSA 001837

EXHIBIT NO. 62

HIGHLIGHTS

Stephen B. Offler
Week Ending 91-04-12

VACATION: Steve, Monday 91-04-15
Jeff, Friday 91-04-19

FORD MY'92 ELECTRONIC SPEED CONTROL DEACTIVATE PS

CUSTOMER ISSUES: The audible noise problem from switch snap on W[illegible] was experienced by George Randall, alerting him to a potential problem on his vehicles (W[illegible] van, F-series trucks). He has discovered a couple of related issues: a "feel" in the brake pedal, and a audible resonance from the brake booster diaphragm, which are occurring simultaneously with our switch's actuation. I have had a couple of conversations with George, and at present we're leaning towards an incipient disc to address these issues. George has asked us for anything we can come up with (i.e. characteristics not necessarily within his spec.) so he can do some quickie testing. Jeff DiDomenico is presently working on an incipient disc, and after several iterations he is making very good progress. We are, of course, shooting for a disc that will yield a device within the truck spec. When we have a disc (mid-next week at the present rate) we plan characterizations and life-testing before shipping anything to George.

We plan to ship 100 samples of 77PSL2-3 (Truck) today. These use prototype switches from the AMI calibration iteration, which were Impulse, Powered Impulse, and Thermal Cycle tested to verify the functionality of this kluged design. Jeff has built sensors using the Elco CNC lathe hexports built to the original J512 spec. Production aluminum crimp rings and the production crimp equipment will be used. Final testing must be done in the lab; 77PS switches are too short to fit the production 57 tester.

We have received requests for engineering samples from Weatherhead and Kelsey-Hayes for the Ford-required verification of the modified J512 seal. We planned to get all three Tier-1's requirements before sending hexport jobs to the Model Shop, however Pitts is dragging their feet. When they finally give us their needs, they will be charged a higher piece-price.

Regarding the SREA's to relax terminal position from 0.30-.070 to 0.25-0.75. George has signed off but Bruce's supervisor (a new individual, not Frank Janosi)

Also, along with the SREA's, Bruce has asked for updated prints. The ECN for these has been filed.

PRODUCTION ISSUES: Elco's latest submission of 36900-1 hexports has been rejected for threads. We met with Mark Godbout in R.I. who demonstrated that the "go" gage required greater than the spec. of 4.5 in-lbs torque, but the tri-roll PD gage showed the parts near nominal. Careful inspection using an optical comparator with a thread template showed the initial threads to be damaged. With Stan Homol's input, we have determined that these threads were most likely damaged during plating. It looks like the same re-rolling operation that has become necessary on other 52/57 hexports will be needed here.

I have completed a set of tables for use with the TDR chamfer gages. Since the calculation of chamfer diameter and angle is very sensitive to gage ball diameter, separate tables were created for each anticipated ball diameter. For a given set of gage ball sizes, the tables

tabulate the actual readings obtained from the gage for the larger and smaller ball, and provide a calculated diameter and angle. A set of tables for each gage has been reproduced from the originals, which I plan to keep. The tables are extremely important; without them the $3200/each gages are useless.

77PS DESIGN: During the above-mentioned 77PS prototype verification testing, we also piggybacked another test. During powered Impulse cycles, we ran half the switches at the spec. of 2 Hz, and the other half at 0.2 Hz. This was an attempt to determine if the relatively high and unrealistic 2 Hz had a negative effect on the contacts. All devices passed; the fast cycled contacts show marginally more wear but nothing significant. One device had a very high millivolt drop (131 mV versus about 10 for all others); we plan to analyze this further. Devices were purposely pinned at the extremes of the pin window, and the high mV device was one that was pinned high i.e. potential creep release and minimum contact gap.

ECN's are in the process of being placed for various 77PS components. We are going through the exercise of tweaking production tools and/or tweaking prints to match the parts. This includes 46515 (base), 27713 (rebump cup), 36900 (hexport), 36887 and 8 (terminals) and 36889 (spring). Of all of the above, the spring requires the most effort. I plan to submit the other 5 on an ECN, then spend significant time on the spring. We have learned from prototypes that the spring in reality does not deflect exactly as assumed when studied on paper. Effort must be spent to understand how well the prototype parts match the prototype prints, how well the prototype prints match the production prints, then determine how well the prototype assemblies match the production prints, then make tweaks as needed so the all the features of the production parts fall into the proper places.

TMS PROTOTYPE VERIFICATION TEST: TEST 134-07-12 JAN 4/15/91

ST # 134-07-12

#	INITIAL GAGE	INITIAL PIR	INITIAL LOC.	INITIAL ACT	INITIAL REL	INITIAL oV	POWER	GAGE	FINAL ACT	FINAL REL	FINAL oV	GAGE DELTA		oV DELTA	
1	91.6	0.141	low	138	70	1.3	0.2 Hz	90.7	130	80	5.6	-1.1		2.3	
2	94	0.143	low	141	72	5.2	0.2 Hz	92.8	143	81	10.2	-1.2		5	
3	91.5	0.141	low	135	73	4.3	0.2 Hz	90.4	137	83	4.9	-1.1		0.6	
4	93	0.142	low	137	66	5.4	0.2 Hz	91.5	137	77	8.2	-1.5		2.8	
5	90.6	0.142	med	130	78	5.1	0.2 Hz	90.3	130	75	6.1	-0.3		-1	
6	92.9	0.144	med	140	77	5.0	0.2 Hz	92.6	140	80	8.5	-0.3		2.7	
7	92.8	0.144	med	134	72	6	2 Hz	93	130	76	7.4		0.2		1.4
8	93.4	0.144	med	132	60	7.4	2 Hz	92.9	140	77	6.3		-0.5		-1.1
9	92.5	0.145	high	135	71	6.6	2 Hz	91.9	139	76	8.6		-0.6		2
10	91.7	0.145	high	139	73	7.4	2 Hz	91	130	77	8.8		-0.7		1.4
11	92.9	0.144	high	130	80	6.8	2 Hz	93	143	80	11.9		0.1		5.1
12	92.1	0.145	high	141	73	6.7	2 Hz	92.5	140	83	130.7		0.4		125
				137.3	72.7				138.4	78.6		-0.91	-0.10	2.06	1.36
				2.7	5.9				5.0	3.2		10.456	0.429	11.47	1.90

TO CONTROL DOUGLAS
PER J SCHOCK
I INFORMED K-H
THAT THIS IS NOT A
SUBMERSIBLE SWITCH
R
Joe S.

KELSEY-HAYES GROUP

April 15, 1991

Joe Schock
Texas Instruments - Control Products Division
33737 West 12 Mile Road
Farmington Hills, MI 48331

Dear Joe,

During development testing of the 1993 FN-10 dual proportioning valve one TI switch failed (Ford P/N F2VC-9F924-BA). After 264 cycles of alternate immersion testing, the normally closed pressure switch will not open @ pressure rise.

Alternate immersion testing consists of submerging the entire valve assembly in 5% Saltwater at 100°F for 5 minutes, then pull valve from water and allow to dry above the tank for 55 minutes. To simulate vehicle condition, the production mating connector is used on the pressure switch to seal the switch. The switch was supplied 5.5 milliamperes at 12 volts D.C.. During the test, the millivolt drop across the switch contacts was measured. The millivolt drop was always low (approx. 0.0 mV.). We are currently setting up to hydraulically actuate the valve during the alternate immersion test. The failed pressure switch is enclosed. Please determine root cause of failure and submit an 8-D to detail the problem. Your timely response is greatly appreciated.

Sincerely,

Jim Cousins

/dds

cc: G. Knight
G. Will
G. Giles
B. Pease (Ford)

TI-NHTSA 001841

Pages containing material that may be inventive must be witnessed by two persons who understand the contents and are not co-inventors

Kelsey-Hayes Returned Device Test #195-15-01

Purpose: Determine the root cause of failure.

Nature of Failure:

- After 264 cycles of alternate immersion testing, our switch which is normally closed would no longer open.
- Alternate immersion testing consists of submerging the entire valve assembly, including the mounted pressure switch, in 5% Salt-water at 100°F for 5 min, then pulling the valve assembly from the water and allowing to dry above the tank for 55 min.
- The pressure switch is not ~~monitored~~ pressure cycled during this test but millivolt drop is monitored and seemed to be normal even after failure.

Analysis:

Visual Inspection:

- Device is a 5795C 5-3 (Date Code 0317, Ford Part #2VC 7F390 It is a pass-car device built with the first rebump caps and was part of sample order C0-95. The housport is an SAE J514 with zinc w/chromate leached clear plating. Crimp ring is steel, zinc w/yellow chromate plating. Base is a grey "L" with centered polarity tab.
- The housport's sealing surface is clean as is are the threads except for the last one. The rest of the exposed areas of the housport, as well as the exposed

WORK OF: Jeffrey DiDomenico DATE:

I witness this document and understand its contents. | I witness this document and understand its contents.

Pages containing material that may be inventive must be witnessed by two persons who understand the invention and are not co-inventors

15-01

areas of the cup and crimp snap are severely oxydized as would be expected. The base is relatively clean. The connector cavity has just a bit of salt deposits in the corners. The terminals look to be in good shape and have what seems to be greenish contact grease left in them. The locking tab on one of the terminals seems to be discolored.

Characterization:

- The disc snaps but there is no continuity change between and release values for the disc were taken as well as millivolt drop with disc activated and released.

Disc Snap	No Drop
Act/Rel	Act/Rel
165/99 mi	325/96 mV

Actuation value is a little high compared to the measurements taken before we shipped the devices.

- Current leakage is excessive, too high to measure or source. Resistance between terminals and crimp ring measures only 40K Ω.

Disassembly:

- Salt penetrated the base assembly as pitted on the bottom of the cup. A great deal of corrosion formed around the transfer pin rendering it stuck. The hinge side of the movable terminal was also severely corroded and stuck. The contacts themselves still looked OK which accounts for the low millivolt drop.

WORK OF: Jeffrey D. Romano DATE: 4/20/97

I witness this document and understand its contents.

I witness this document and understand its contents.

№ 05774- 40

TI LABORATORY AND ENGINEERING NOTEBC

Pages containing material that may be inventive must be witnessed by two persons who understand the invention and are not inventors

142-15-01

The disc, converter, and washer have some salt on th
from where it packed passed the transfer pin. T
hydraulic seal is untouched and the bottom of th
hexport is clean.

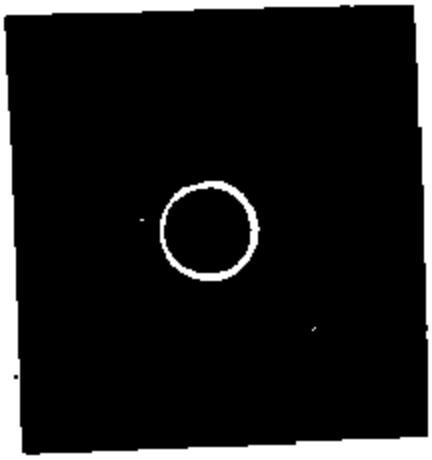

WORK OF: Jeffrey D. Domenico

DATE: 4/22/91

I witness this document and understand its contents.

I witness this document and understand its contents

Pages containing material that may be inventive must be witnessed by two persons who understand the invention and are not co-inventors.

Pg. 15-01

Conclusions: The most likely leak path, judging by the effected areas, is past the mating connector into the switch body. The fluid slowly ran down the terminals, particularly the movable terminal, and puddled on the cap and the hinge of the movable terminal, as well as around the transfer pin. The stuck hinge and T-pin account for the lack of continuity change. The good condition of the contacts account for the low millivolt drop. A poor environmental seal in the mating connector is ultimately responsible for the failure.

WORK OF: Jeffrey D. Donovan DATE: 4/26/91

Witness this document and understand its contents. | I witness this document and understand its contents.

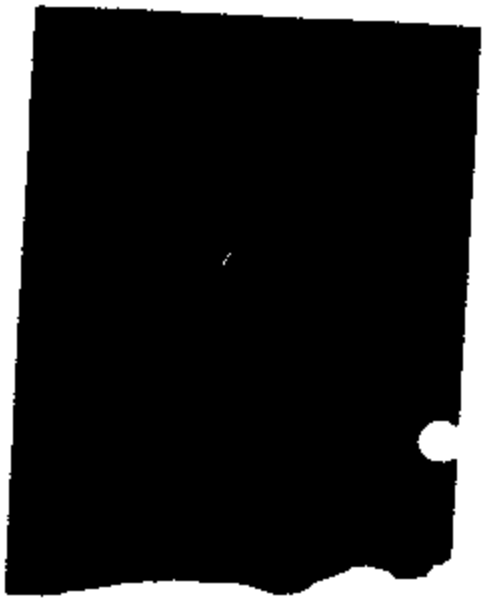

Initial Sample Report – Dimensional

No. 112384

Page ___ of ___

TO BE COMPLETED BY SUPPLIER

SUPPLIER: Texas Instruments, Attleboro, Ma.	LOCATION CODE: T097K
PART NUMBER: F2VC-9F924-AB	
BUYER: Fred Hendershot	CODE: 165
FORD CONSIGNEE DIV: EED	NO. OF SAMPLES: 6
PRODUCT GROUP	YES / NO
CONTROL ITEM ▽	YES / NO
PART NAME: Next Generation Speed Control Deactivation Pressure Switch	
B/P DATE: 4/17/91	MODEL YEAR AND PRODUCT LINE
B/P DOCUMENTATION PENDING ☐	SUPPLIER DIVISION NO: N/A

REASON FOR SAMPLES

NEW PART ☒ CHANGED PART ☐ NEW LOCATION ☐ NEW TOOLS ☐ MULTIPLE CAVITY DIES ☐

SAMPLE MADE ON PRODUCTION SET-UP AND TOOLS	YES ☐ NO ☐
ADDITIONAL HAND OR TOOL ROOM WORK PERFORMED	YES ☐ NO ☐
SAMPLES MADE TO B/P DATED	4/17/91
DATE INSPECTED	9/20/91

WE HEREBY CERTIFY THE INSPECTION RESULTS BELOW ARE CORRECT AND THAT OUR SAMPLE MEETS FORD MOTOR COMPANY SPECIFICATIONS

SIGNATURE OF RESPONSIBLE SUPPLIER REPRESENTATIVE: Jim Hall — TITLE: QRA Eng. — DATE: 9/26/91

CHARACTERISTIC / DIMENSION OR SPECIFICATION	CLASS* ▽	SUPPLIER INSPECTION RESULTS	CONSIGNEE VERIFICATION OF INSPECTION RESULTS	PROCESS CAPABILITY STUDY REQUIRED	PROCESS CAPABILITY STUDY COMPLETED
PAI RESULTS RECORDED ON TI FORMAT					

TO BE COMPLETED BY CONSIGNEE

DISPOSITION	SERIAL NO.	APPROVED	REJECTED	NOT PACED			
DIMENSIONAL B/P DATED	10000				INSPECTION AND TESTING INSTRUCTIONS APPROVED	YES ☐ NO ☐	SPECIAL CLASSES APPROVED YES ☐ NO ☐ NOT REQ'D ☐
					INITIAL SAMPLE APPROVAL MUST BE ACHIEVED BY APPROVAL OF FIRST PRODUCTION SHIPMENT	YES ☐ NO ☐	CONTROL PLAN APPROVED YES ☐ NO ☐ NOT REQ'D ☐
MATERIAL TEST DATA FORM					APPROVED BY STYLING	YES ☐ NO ☐ NOT REQ'D ☐	APPROVED BY FORD ENGINEERING YES ☐ NO ☐ NOT REQ'D ☐
EE TEST DATA FORM					DIVISION	AUTHORIZED SIGNATURE	DATE

Prod Qual Dept ☒ 292a

*DESIGNATED CHARACTERISTIC CLASS
▽ – CONTROL ITEM

COPY 1

TI-NHTSA 001847

TEXAS INSTRUMENTS

DIMENSIONAL ANALYSIS ON PART NUMBER

F3TA-9F924-AA

	ELEMENT SPEC	CAVITY # A2 ACTUAL	CAVITY # C3 ACTUAL	CAVITY # D4 ACTUAL	CAVITY # E5 ACTUAL	CAVITY # D6 ACTUAL	COMMENTS
15	1.24 - 1.55	1.348	1.394	1.337	1.394	1.332	
16	6.26 - 6.81	6.670	6.676	6.680	6.665	6.667	
17	NO FLAS-/BURRS	OK	OK	OK	OK	OK	
18	7.28 - 7.75	7.549	7.444	7.639	7.454	7.425	
	2.79 - 3.41	3.10	3.10	3.10	3.07	3.07	
20	0.67 - 1.30	1.096	1.096	1.102	1.112	1.141	
21	DATE & PART#	OK	OK	OK	OK	OK	
22	0.25PTA 40-5	UNABLE TO	MEASURE	BECAUSE	THREADS ARE	ALREADY IN	
	DEG CHAMFER						
23	3/8-24,NF-24	OK	OK	OK	OK	OK	
24	1.10 - 1.40	1.220	1.213	1.230	1.234	1.230	
25	2.5 C	.20	.20	.20	.20	.20	
26	0.14 D	.020	.036	.008	.022	.025	
27	45DEG - 45DEG	MEASURED ON	CROSS SECTIONED PIECE				
28	40DEG - 50DEG	MEASURED ON	CROSS SECTIONED PIECE				
29	7.92 - 8.02	7.90 7.91	7.90 7.89	7.89 7.90	7.89 7.88	7.86 7.90	
30	1.50 - 2.04	1.754	1.837	1.831	1.807	1.807	

TEXAS INSTRUMENTS

DIMENSIONAL ANALYSIS ON PART NUMBER

F37A-9F9C4-AA

	BLUEPRINT SPEC	CAVITY # A2 ACTUAL	CAVITY # C2 ACTUAL	CAVITY # C4 ACTUAL	CAVITY # D5 ACTUAL	CAVITY # D6 ACTUAL	COMMENTS
21	9.29 - 9.66	9.55	9.57	9.50	9.50	9.58	
22	9.12 MIN	9.22	9.14	9.14	9.21	9.18	
23	14.22 MAX	13.64	13.62	13.56	13.47	13.66	
24	57.15 MAX	55.60	55.60	55.55	55.58	55.52	
[illegible]	12.55-13.11	12.83	12.83	12.83	12.80	12.80	
36	11.65-12.17	11.79 11.84	11.69 11.91	11.85 11.84	11.89 11.89	11.91 11.94	
37	1.95-2.19 3PL	1.80	2.02	1.82	1.80	1.80	REAR SIDE WAS NOT
38	29SEC - + 20SEC (4pl) MEASURED IN SEPARATE SHEET - CROSS SECTIONED						
39	30.5 MAX	31.61 31.69	32.59 31.72	31.64 31.75	31.58 31.65	31.64 31.79	
40	14.02-14.53	14.291	14.221	14.225	14.222	14.221	
41	3.30 - 3.60	3.420 3.419	3.441 3.429	3.435 3.450	3.434 3.430	3.436 3.431	
42	7.23 - 7.37	7.299 7.281	7.300 7.352	7.294 7.284	7.303 7.281	7.300 7.400	
43	5.56 - 5.85	5.604 5.580	5.641 5.642	5.594 5.563	5.610 5.591	5.612 5.580	
44	71.50SEC+/-20SEC	72DEG 20MIN	72DEG 50MIN	72DEG 30MIN	72DEG 50MIN	72DEG 20MIN	
	(2 PL)	72DEG 20MIN	72DEG 30MIN	71DEG 30MIN	72DEG 40MIN	71DEG 40MIN	
45	1.42-1.63 3PL	1.595 1.572	1.610 1.581	1.541 1.544	1.595 1.593	1.609 1.580	
46	0.35 - 0.66	.571 .557	1.545 .579	1.550 .573	1.562 .556	1.538 .582	
	(4 PL)	1.582 .560	1.583 .553	1.542 .564	1.563 .569	1.576 .571	

TEXAS INSTRUMENTS INCORPORATED • 34 FOREST STREET • ATTLEBORO, MA 02703
508-699-3000 • TELEX 95-1705 TWX 710-348-6808 • CABLE TEXINS

TEXAS INSTRUMENTS

DIMENSIONAL ANALYSIS ON PART NUMBER

F3T0-9F924-AA

	BLUEPRINT SPEC	CAVITY # A2 ACTUAL	CAVITY # C3 ACTUAL	CAVITY # C4 ACTUAL	CAVITY # 25 ACTUAL	CAVITY # D6 ACTUAL	COMMENTS
47	2.59 - 2.80	L 2.683	L 2.705	L 2.687	L 2.697	L 2.769	
	(2 PL)	R 2.702	R 2.696	R 2.705	R 2.721	R 2.684	
	0.2 x # D	L.02. R.015	L.000 R.077	L.076 R.061	L.061 R.036	L.01. R.158	
	2.465	2.464 2.450	2.465 2.390	2.389 2.364	2.364 2.492	2.476 2.211	
48	0.35 - 0.66	.463 .456	.559 .530	.571 .492	.506 .462	.474 .544	
	(4 PL)	.494 .538	.474 .505	.449 .514	.511 .509	.491 .509	
+/-	0.56 - 1.17	.985 .995	.959 .962	.968 .989	.990 .953	.967 .958	
	(4 PL)	.943 .952	.996 .959	.975 .928	.935 .954	.980 .974	
50	45DEG +/- 20DEG	44DEG 45MIN	43DEG 50MIN	45DEG 39MIN	45DEG 26MIN	43DEG 58MIN	
	(4 PL)	44DEG 47MIN	44DEG 45MIN	44DEG 08MIN	44DEG 38MIN	45DEG 56MIN	
		45DEG 13MIN	44DEG 37MIN	44DEG 11MIN	45DEG 12MIN	45DEG 54MIN	
		45DEG 06MIN	45DEG 20MIN	44DEG 44MIN	44DEG 23MIN	44DEG 20MIN	
51	8.30-8.72 2PL	8.342 8.450	8.352 8.429	8.364 8.499	8.365 8.429	8.504 8.392	
52	2.15-2.42 2PL	2.180 2.720	2.198 2.153	2.169 2.219	2.161 2.170	2.149 2.194	
53	25DEG +/- 20DEG	24DEG 22MIN	24DEG 10MIN	24DEG 47MIN	24DEG 17MIN	23DEG 37MIN	
	(2 PL)	23DEG 32MIN	23DEG 41MIN	23DEG 50MIN	23DEG 04MIN	23DEG 29MIN	
54	COLOR: BLACK	OK	OK	OK	OK	OK	
55	13-19DEG 2PL	ON CROSS	SECTIONED	PART ON	PRINT		
	0.66 - 0.87	ON CROSS	SECTIONED	PART ON	PRINT		
57	0.10 - 0.31	.252 .278	.287 .251	.276 .260	.287 .260	.264 .257	
58	0.58 - 0.68	.625 .646	.646 .621	.640 .622	.656 .622	.644 .626	

TEXAS INSTRUMENTS

DIMENSIONAL ANALYSIS ON PART NUMBER

F2VC-9F924-AB

NOTE: MARKED POINT DENOTES CAVITY # 1A

	BLUEPRINT SPEC	CAVITY # 2A ACTUAL	CAVITY # 3C ACTUAL	CAVITY # 4C ACTUAL	CAVITY # 5B ACTUAL	CAVITY # 6C ACTUAL	COMMENTS
	1.92 - .63	11.58	11.69	11.69	11.70	11.69	
2	1.45 - .24	1.42	1.29	1.33	1.26	1.31	
3	19.84 - 19.49	19.62	19.64	19.64	19.60	19.66	
4	16.76 - 16.56	16.62	16.64	16.64	16.64	16.65	
	3.35 - 2.34	2.91	2.91	2.91	2.91	2.90	
6	11.97 - 11.40	11.70	11.79	11.70	11.77	11.70	
7	3.19 - 2.79	12.84 2.85	12.83 2.84	12.84 2.85	12.86 2.86	12.89 2.85	
8	8.53 - 8.72	10.49 0.36	10.54 0.57	10.45 0.51	10.31 0.35	10.38 0.34	
9	20.09 - 20.54	OK	OK	OK	OK	OK	
10	2.05 - 1.85	2.695	2.685	2.680	2.705	2.685	TOOL TO BE CORRECTED

THE PARTS FOR (F2VC-9F924-AB) AND LIGHT TRUCK (F3TA-9F924-AA) SWITCHES ARE PRODUCED OFF OF THE SAME PRODUCTION TOOLING.

THE (F3TA-9F924-AA) FULL DIMENSIONAL ANALYSIS FOLLOWS. DIMENSIONS # 1-10 LISTED ABOVE PERTAIN TO THE POLARITY KEY FEATURE WHICH IS DIFFERENT ON THE (F2VC-9F924-AB) SWITCH.

TEXAS INSTRUMENTS

DIMENSIONAL ANALYSIS ON PART NUMBER

FXTA-NF924-AA

NOTE: HARVED PRINT DENOTES CAVITY # A1

	BLUEPRINT SPEC	CAVITY # A2 ACTUAL	CAVITY # C3 ACTUAL	CAVITY # C4 ACTUAL	CAVITY # D5 ACTUAL	CAVITY # D6 ACTUAL	COMMENTS
1	[illegible]	13.692	13.423	13.682	13.719	13.646	
2	[illegible] +/- 20DEG	20DEG 34MIN	31DEG 03MIN	30DEG 49MIN	32DEG 00MIN	32DEG 27MIN	
	[illegible]	2.690	2.669	2.667	2.689	2.692	TOOL TO BE CORRECTED
4	[illegible]	18.685	18.663	18.691	18.677	18.636	
5	[illegible]	.199 .137	.208 .196	.245 .197	.222 .176	.160 .161	
6	[illegible]	.502 .510	.519 .453	.415 .347	.392 .502	.420 .506	
7	[illegible]	2.900 2.898	2.896 2.896	2.906 2.906	2.902 2.891	2.867 2.894	
8	19.45-19.61	19.60	19.58	19.61	19.57	19.61	
9	16.56-16.76	16.564	16.600	16.605	16.606	16.625	
10	12.13-13.21	13.040	13.036	13.038	12.970	12.970	
11	11.40-11.90	11.770	11.810	11.700	11.790	11.777	
12	2.84 - 3.05	2.925	2.917	2.929	2.930	2.929	
	0.1 R	.094	.013	.019	.006	.002	
13	1.24 - 1.45	1.397	1.294	1.292	1.320	1.326	
14	11.60-11.92	11.742	11.672	11.705	11.680	11.737	

TI-NHTSA 001852

TEXAS INSTRUMENTS INCORPORATED
FORD MOTOR COMPANY
NEXT GENERATION SPEED CONTROL

TI COMMITMENT (DESIGN/DEVELOPMENT)

- IN 1987, FORD ENGINEERING APPROACHED TI AND REQUESTED US TO DEVELOP A LOW COST PRESSURE SWITCH FOR THE NEXT GENERATION SPEED CONTROL SYSTEM. THIS REQUEST WAS PLACED 5 YEARS IN ADVANCE OF PRODUCTION WITH FULL TI RESPONSE.

- IN SUPPORT OF THIS FORD REQUEST, TI DEPLOYED PRODUCT DESIGN ENGINEERING/TECHNICIAN TEAMS SPECIFIC TO FORD'S REQUEST AND THIS PROGRAM.

  - TI INVESTMENT IN DEVELOPMENT OF PRESSURE SWITCH SINCE 1987 HAS EXCEEDED $1KK.

- TI HAS BEEN INVOLVED AS SOLE SUPPLIER IN DEVELOPING PRESSURE SWITCH WITH FORD ENGINEERING.

  - THROUGH EVOLUTION OF PRODUCT, TI HAS CONTINUALLY BEEN ABLE TO ADAPT AND DEMONSTRATE IT CAN MEET ALL FORD REQUIREMENTS.

- TI DESIGN ENGINEERING DEVELOPED CUSTOMIZED MEXPORT TO MEET FORD FUNCTIONAL/COST REQUIREMENTS.

  - SIGNIFICANT LEVEL OF EFFORT EXTENDED IN WORKING WITH SAE COMMITTEE.

17 APR 91 CD/BAA 050-0175

TEXAS INSTRUMENTS INCORPORATED
FORD MOTOR COMPANY
NEXT GENERATION SPEED CONTROL

TI COMMITMENT (TOOLING)

- IN ORDER NOT TO JEOPARDIZE INTEGRITY OF PROGRAM TIMING, TI CONTINUED TOOLING DEVELOPMENT FOR SEVERAL MONTHS WITHOUT A FORMAL COMMITMENT FROM FORD.
- TI IS CONTINUING TO LOOK FOR ALTERNATIVES TO REDUCE TOTAL TOOLING BURDEN (TO BOTH FORD AND TI).
  - NEW TI TOOLING PROPOSAL REDUCES FORD BURDEN BY $100K.
- CRUISE CONTROL PRESSURE SWITCH REPRESENTS STATE OF THE ART IN PRESSURE SWITCH ASSEMBLY TOOLING.
  - FIRST TRADITIONAL SNAP ACTION PRESSURE SWITCH TI WILL MANUFACTURE BY A COMPLETELY AUTOMATED PROCESS.
  - MATERIAL/LABOR AND OVERHEAD RATIO ROUGHLY 72/28 VS. ROUGHLY 55/45 FOR AVERAGE SNAP ACTION SWITCH.

17 APR 91 CB/DAA 050-0175

TEXAS INSTRUMENTS INCORPORATED
FORD MOTOR COMPANY
NEXT GENERATION SPEED CONTROL

TI COMMITMENT (PRICING)

- TI HAS CONTINUED TO OPERATE WITHIN THE FRAMEWORK OF THE ORIGINAL PROGRAM PRICING GOALS AS SET FORTH BY FORD.
  - DELTA TO ORIGINAL PROGRAM PRICING GOAL A RESULT OF DESIGN/FUNCTION MODIFICATIONS REQUIRED BY FORD.
  - TI HAS BEEN RESPONSIVE IN OUTLINING IN DETAIL IMPACT OF EACH MODIFICATION TO ORIGINAL PRODUCT DESIGN/FUNCTION REQUIRED BY FORD.
- GOAL OF TI TO BE LOW PIECE PRICE, LOW TOTAL COST, HIGHEST QUALITY SUPPLIER.
  - TI FORMALLY AWARDED PROGRAM AFTER PRODUCT WAS PUT TO MARKET TEST BY FORD.

17 APR 91 CD/DAA 050-0175

TI-NHTSA 001896

TEXAS INSTRUMENTS INCORPORATED
FORD MOTOR COMPANY
NEXT GENERATION SPEED CONTROL

SUMMARY

- SINCE BEING APPROACHED BY FORD ENGINEERING IN 1987, WE HAVE INVESTED AND EXECUTED EVERY DETAIL OF THIS PRESSURE SWITCH AND A SUCCESSFUL LAUNCH OF THE NEXT GENERATION SPEED CONTROL SYSTEM CAN BE EXPECTED.
- TI HAS WORKED DILIGENTLY TO ACHIEVE A PERFORMANCE LEVEL WORTHY OF A COMPANY GIVEN THE HIGHEST RATING BY FORD'S SWITCH COMMODITY TEAM.
- TI CONTINUES TO LOOK FOR CREATIVE OPPORTUNITIES TO REDUCE/MAINTAIN THE PRESENT COST STRUCTURE OF THIS PROGRAM.
- WE VIEW THAT OUR PERFORMANCE AND COMMITMENT WARRANTS LONG TERM STABILITY FOR TI AS THE SWITCH SUPPLIER, AND WE ARE SEEKING THIS OBJECTIVE FOR MY93 AND BEYOND.

17 APR 91 CD/DAA 050-0175

TI-MITRA 001808

TEXAS INSTRUMENTS INCORPORATED
FORD MOTOR COMPANY
NEXT GENERATION SPEED CONTROL

CONTRACT PROPOSAL

	MODEL YEAR			
	92	93	94	95
BASE PRICE	$2.21	$2.21	$2.18*	$2.22**

* BASE PRICING ASSUMES DESIGN CHANGES:

  - $.09 SAVINGS ASSOCIATED WITH USE OF J514 HEXPORT.

** BASE PRICING ASSUMES DESIGN CHANGES:

  - $.01 SAVINGS ASSOCIATED WITH AUTHORIZATION TO ELIMINATE ENVIRONMENTAL SEAL.

  - $.01 SAVINGS ASSOCIATED WITH AUTHORIZATION TO ELIMINATE CHROMATE FINISH ON HEXPORT.

TI-NHTSA 001687

TEXAS INSTRUMENTS INCORPORATED
FORD MOTOR COMPANY
NEXT GENERATION SPEED CONTROL

CONTRACT PROPOSAL NOTES

- FOR MY93, TI WILL ABSORB ALL MATERIAL, LABOR, AND OVERHEAD COST INCREASES.
  - THIS IS SIGNIFICANT IN THAT WITH LABOR AND OVERHEAD ONLY MAKING UP 28% OF THE TOTAL COST, PRODUCTIVITY GAINS TO OFFSET INCREASED COSTS ARE NOT AVAILABLE.
- WITH PROPOSAL ACCEPTANCE BY FORD, TI WILL BE GIVEN RIGHT OF FIRST REFUSAL ON NEXT GENERATION SPEED CONTROL DEACTIVATION PRESSURE SWITCH FUNCTION.
  - IF MOUNTING LOCATION OF SWITCH IS MOVED PRIOR TO MY96, TI IS GIVEN FIRST OPPORTUNITY TO DESIGN/DEVELOP A PRESSURE SWITCH TO FIT NEW MOUNTING LOCATION.
- TI MY93 PRICE QUOTATION IS PREDICATED UPON FORD ACCEPTANCE OF TOTAL LONG TERM PACKAGE PROPOSAL.
- MY94 AND MY95 PRICING IS CONTINGENT UPON WPISOP 3200 INFLATION RATE BEING LESS THAN OR EQUAL TO 3% EACH YEAR.

UNITED ALUMINUM CORPORATION

100 UNITED DRIVE · NORTH HAVEN, CONNECTICUT 06473 · (203) 239-5581

UNITED ALUMINUM

9281

VALENTINE TOOL & STAMPING, INC.
171 WEST MAIN STREET
NORTON, MA 02766-0469

ATTN: DICK WHITNEY

DATE 4/18/91
P.O. # 13876
SHIPPED 4/19/91
UA ORDER # 161499

THIS IS TO CERTIFY THAT THE MATERIAL LISTED BELOW CONFORMS WITH THE CHEMICAL COMPOSITION LIMITS OF QQA-250/8F AND THE FOLLOWING ARE THE LIMITS:

AA 5052

CHEMICAL COMPOSITION

	MIN	MAX
SILICON		0.25
IRON		0.40
COPPER		01
MANGANESE		01
MAGNESIUM	2.2	2.8
CHROMIUM	0.15	0.35
ZINC		01
TITANIUM		
OTHER ELEMENTS (EACH)		05
OTHER ELEMENTS (TOTAL)		15
ALUMINUM	REMAINDER	

MECHANICAL PROPERTIES

TENSILE STRENGTH	28.3 KSI
ELONGATION IN 2"	20%

.032 2.312 5052-0

UNITED ALUMINUM CORPORATION

TITLE

CRIMP RING

REV B

74797

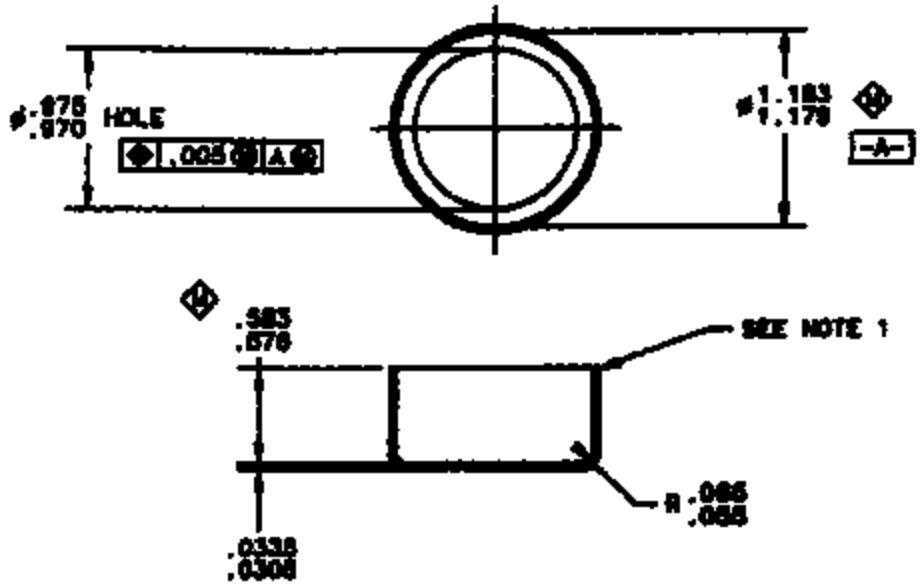

NOTES:
1. PINCH OFF RADIUS ALLOWED.
2. .002 MAX. BURR ALLOWED.
3. PARTS TO BE SHIPPED, ISSUED, AND STORED IN SEALED PLASTIC BAGS.
4. MATERIAL CERTIFICATION REQUIRED WITH EACH SHIPMENT.

CERTIFIED PRINT
ENG. STD. E3898 REV. E
DATE JUL 1 1991

SUPERSEDES DWG. 74797 REV. A DATED 11-2-90

PART NO.	MATERIAL	FINISH
74797-1	ALUMINUM 5052	

BY
CK.
ENG.

TEXAS INSTRUMENTS
ATTLEBORO, MASSACHUSETTS 02703

KIDDON

A

74797

TI-NHTSA 001860

SAMPLE ORDER

ORDER NO: C091-21

REQUEST DATE: 04/19/91

CREDIT ACCOUNT: 5902

COST CENTER: 101

PRODUCT CODE: 060

CUSTOMER: FORD MOTOR COMPANY

CUSTOMER P.O. NO: N/A

TI PART NO: 57PSL5-3

CUSTOMER PART NO: F2VC 9F924 ~~AA~~ BB

QUANTITY: 10

PRICE:

DELIVERY PROMISED: 4/24/91

SPECIAL INSTRUCTIONS: PARTS SHOULD BE ~~TAGGED~~ SCRATCHED WITH ACTUATION POINT

BILL TO:

SHIP TO:
TEXAS INSTRUMENTS
33737 W. 12 MILE ROAD
FARMINGTON HILLS, MI 48331
ATT'N: JOE SCHUCK

XX PRODUCTION SAMPLES

ENGINEERING DEVELOPMENT SAMPLES

CC: ENGINEERING: STEVE OFFILER

PRODUCTION CONTROL: MARIE CROSSLAND

SALES ENGINEER: JOE SCHUCK

HIGHLIGHTS

Stephen B. Offler
Week Ending 91-04-19

FORD MY'92 ELECTRONIC SPEED CONTROL DEACTIVATE PS

CUSTOMER ISSUES: In response to the audible noise/feel issues at Ford, we are working on incipient snap discs to produce "quiet" sensors. Jeff DiDomenico has gone through several developmental iterations with .0122" 301V stainless, and has reached a point where it is clear that a thinner material is indicated. We will continue iterations with .010" material. The best lot to date was built up into sensors, shooting for the LT actuation of 200-300 psi, using standard amplification ratio parts (27288 cup). We discovered that pin throw is severely limited, measuring about half that of a standard sensor (.010" versus .020"). The "snap" range of the sensor has a significant slope, at about 6 psi per mil. Four of these sensors were run to 500K on production cycling equipment with no problems. At George Randall's urgent request, we shipped him two devices built with these sensors. He wants to have these at his immediate disposal in case Nehru Modi (a much-feared manager at LT) becomes involved.

Bruce Pease has requested and received his latest print revision, showing the new terminal position tolerance of +/- 0.25mm, up from +/- 0.20. Also, Bruce and George are comparing notes on the WIN88 noise/feel issue, and Bruce has asked for a couple quiet devices like the ones we sent George. Bruce does not indicate any rush is needed. More disc development will be required, since using the low amplification ratio cup (27713) will limit pin throw to an even greater degree compared with the above.

We are pulling together the hydraulic testing requirements for Kelsey-Hayes and for Dana-Weatherhead, and plan to submit a model shop job to create hexports to specific J512 dimensions. Pitts has promised to forward their requirements also, but after repeated contact we still do not have any information from them.

PRODUCTION ISSUES: It has been determined that, for the present, Elco will be re-rolling the threads on 36900-1. To avoid the removal of chromate during wash after re-roll, we will be supplying Elco with vanishing oil (which eliminates the need for the wash). We have not reached any final conclusion on this thread-damage issue. Elco is looking at their plating process to determine if less agitation can be used; a change to a harder material has also been suggested. The idea of doing an SPC-controlled thread-chasing operation on our assembly line is not being taken seriously.

Another potential hexport problem has surfaced. In a recent RFQ for a J512 with snubber, Elco's quote as usual listed several exceptions. The significant one relates to .285-.290 on the dog-point O.D. - they want to double this tolerance. The issue lies with the fact that this dimension also appears on 36900-1; however on this part they have not yet mentioned this exception. We immediately measured 20 parts for this dimension, expecting to find them incorrectly built to the doubled tolerance. Instead, all were found to be very near the max. of .290; fully half exceeded the spec. slightly. Visual inspection shows the outermost edge to be damaged in a fashion similar to the thread, with a rolled-over appearance, that also serves to increase the effective O.D. This will become an issue because the TDR chamfer gages rely on this O.D. for alignment and a part that is too large will not fit the gage.

DESIGN ISSUES: Visual inspection of the 77PS contacts run under powered impulse last week shows two distinct conditions: 10 of 12 show very little wear and tear, while the other two look terrible, with globs of silver at the interface, a blackened appearance, and have

copper showing through the silver plated movable contact. These switches were taken from the kludged AMI calibration run, and were very inconsistent in terms of spring angles and contact gap. We are hypothesizing that these two bad switches had very low contact gap, therefore poor arc extinguishing, which explains the damage. This test can be re-run fairly quickly (25K cycles at 2 Hz, about 3.5 hours). Only switches with consistent geometry will be used, and contact gap will be controlled at high and low extremes by pinning.

While assembling prototypes recently, we did a quick characterization of pin-shift due to final crimp. Typically, to determine pin length, a sensor and switch are held together manually while various pin lengths are used; creep actuation indicates short pin and creep release indicates long pin. With the incipient sensors, no creep can be measured, so instead we recorded actuation values for a given pin length held manually, then compared these values after final assembly and crimp. A shift of 15-20 psi was observed, which roughly corresponds to about 3 mils using the given slope of 6 psi per mil. This information will be very useful in the future when choosing pin lengths.

-MSG MF= 276181 FR=CERN TO=PCQA SENT=04/22/91 12:24 PM
RS=101 ST=C DIV=0050 CC=00101 BY=CERN AT=04/22/91 12:24 PM

APRIL 22, 1991

TO:	RUSTY STRUBLE	RCS2	CC:	TOM CHARBONEAU	TC
	MIKE DeMATTIA	PCQA		JOHN KOURTESIS	MDES
	CHARLIE DOUGLAS	CPPC		STEVE MAJOR	WELS
	DICK GARIEPY	MFPC		ANDY McGUIRK	PCQA
	PAUL KOTCH	PRK1		ED O'NEILL	EJON
	JOE LAZARE	JMLS		JOE SCHUCK	WELS
	STEVE OFFILER	SBO1		GARY SNYDER	CPPC
	MATT SELLERS	PCME		MARTHA SULLIVAN	CPPC
	BILL SWEET	PCME		RAY TOURANGEAU	PCME
	JIM WATT	PCQA		TED BALLARD	MFME
	TED BREDIKEN	MFPC		STAN BOBOL	SE2
				CLAIRE BALTHAZAR	MFPC
				BILL COBGDON	MFPC
				STEVE MCCOOEY	MDES
FR:	DAVE CEARR	SARR			

SJ: FORD CRUISE CONTROL PRESSURE SWITCH START-UP MEETING:
04/18/91 MEETING MINUTES

MEETING

THE NEXT MEETING IS SCHEDULED FOR:

DATE: 04/25 (THURSDAY)
TIME: 10:00 - 11:30 AM
PLACE: MARKETING CONFERENCE ROOM

PLEASE CALL ME IF YOU ARE NOT ABLE TO ATTEND

* = ITEMS THAT ARE NEW OR HAVE BEEN REVISED OR COMPLETED SINCE PREVIOUS MEETING

57 L/T	WHO	WHEN	
Hexport:			
* QUALIFY J512 GAGES	SELLERS	04/18	ORIG.
		04/18	COMP.
* SHIP GAGE/DOCUMENTATION TO ELCO	SELLERS	04/25	
. L/T PILOT RUN (PUSHOUT DUE TO HEXPORT AVAILABILITY)	SELLERS/ GARIEPY	01/24 04/19	ORIG. REV.
* CLOSE W/ELCO RE: THE EXCEPTION THEY NOTED ON THE DOG POINT DIA. ON THE SNUBBER PRINT	KOTCH	04/25	
* RULING ON HEXPORT THREAD ISSUE	OFFILER/ SELLERS	04/12 04/15	ORIG. COMP.
* F/U ON ELCO ISSUES RELATED TO THREAD DAMAGE	KOTCH	04/25	
* RECEIVE RE-ROLLED HEXPORTS	KOTCH	05/02	
* REVIEW/ADVISE ON POULSEN'S HEXPORT QUOTES	KOTCH	05/02	
ISR Issues:			
* SUBMIT ISR FOLLOW-UP TO FORD ROA (PUSHOUT DUE TO SREA DELAY)	WATT	04/04 04/25	ORIG. REV.

* DELIVER 236 PRODUCTION SWITCHES (PARTS NOT NEEDED BY FORD UNTIL MID-MAY)	SELLERS/ BALTHASAR	04/01 05/17	ORIG. REV.
. UPDATE TEAM ON AUDIBLE NOISE ISSUE	SCHUCK	ONGOING	
NCIPIENT SNAP DISC SPEC AND INFO. TO DISC DEPT.	OFFILER	04/18 04/25	ORIG. REV.
* INCIPIENT SNAP SWITCH SAMPLES	OFFILER	04/30 04/18	ORIG. COMP.

57 P/C

* LETTER TO FORD TO CLOSE ON TERM POS'N ISSUE FOR ALL 57's	CONATTIA	04/25	
* IER SUPPLEMENT FOR SWITCHES W/BROKEN OFFSET POLARITY KEY BASES (PUSHOUT DUE TO AREA DELAY)	WATT	04/18 05/02	ORIG. REV.
* MODIFY 57PS FMEA FOR PITTS	OFFILER	TBD	
* 238 SWITCHES TO PITTS	SELLERS	04/22	
* UPDATE PROD'N PLAN AS SHOWN BELOW, REFLECTING THE REXPORT DELAY	STRUBLE	04/25	
* SHIP 21K LS-3'S	GARIEPY/ STRUBLE	06/03	

77PS

. DESIGN UPDATE	OFFILER	ONGOING	
. MFG/MECH UPDATE	SELLERS	ONGOING	
. REPORT ON BOXICO P.S. REPEATABILITY	DOUGLAS	ONGOING	
. PROD. LINE SET-UP (MTE CARDS, ETC)	BALTHASAR	ONGOING	
UPDATE SPC FILES/RUN CAPABILITY STUDIES	BALTHASAR	ONGOING	
ESTABLISH OVERALL SCHEDULE OF DESIGN ENG. ACTIONS	OFFILER	05/02	
* COMPLETE DESIGN FMEA	OFFILER	04/18 05/20	ORIG. REV.
. COMPLETE PROCESS FMEA	SELLERS	07/01	
* REPEAT IMPULSE TEST AT 3 HZ TO STUDY CONTACT WEAR (SEE DISCUSSION)	OFFILER	04/25	
. TSL CONTACT ANALYSES; SLOW VS. FAST CYCLE RATE	OFFILER	05/02	
* DETERMINE ACCEPTABLE CALIBRATION WINDOW BY DIMENSIONAL ANALYSIS	OFFILER/ SELLERS	03/14 04/25	ORIG. REV.
* VERIFICATION RUN FOR CALIBRATION WINDOW	OFFILER/ SELLERS	03/28 05/02	ORIG. REV.
* F/D CHARACTERIZATION OF SPRING ARMS	OFFILER	04/18 04/25	ORIG. REV.
. GAGING TECHNIQUE FOR IN-PROCESS F/D CHARACTERIZATION OF SPRING ARMS	SELLERS	04/25	
* QUOTE J512 W/SNUBBER	ROTCH	04/04 04/18 04/18	ORIG. REV. CONF.
. VISIT EASTERN AUTOMATION RE: SPRING/TERMINAL ASM. MACHINE	SELLERS/ MCCOOEY	04/25	
. STAKE PROD'N PARTS ON PROD'N STAKER AND MEASURE TERMINAL POSITION	SELLERS	05/02	ORIG.
57 TO 77 CONVERSION: PHASE 1 TESTING (PUSHOUT DUE TO COMPONENT AVAILABILITY)	SCHOL	05/19 06/06	ORIG. REV.
. IDENTIFY INSPECTION REQMTS. FOR SOP	WATT	06/01	
. 77PS QAS (PRELIMINARY)	WATT	07/01	
. 77PS CHARACTERISTICS SHEETS	WATT	07/15	
. GAGE R&R STUDIES	WATT	07/15	

. 77P8 QAS (FINAL)	WATT	08/01	
. SET UP SPC FILES/RUN CAPABILITY STUDIES	BALTHAZAR	08/01	
JOB'S:			
ASE	SELLERS/	02/28	ORIG.
	OFFILER	05/09	REV.
Production Components:			
* UPDATE CUP PRINT	OFFILER	03/28	ORIG.
		05/09	REV.
. RESOLVE OPEN ISSUES ON MOV. TERM.	SELLERS/	04/04	ORIG.
	OFFILER	04/25	REV.
. STATIONARY TERM.	SELLERS	03/22	ORIG.
(IF BASSLER DELIV. DATE PUSH-OUT)		04/19	REV.
* INVESTIGATE INCONSISTENT BEND RADII CALLOUT ON STAT. AND MOV. TERMINALS	OFFILER	04/18	ORIG.
		04/25	REV.
* RESOLVE OPEN ISSUES ON BASE	SELLERS	04/11	ORIG.
		04/28	REV.
* UPDATE TERMINAL PRINTS/BASE PRINT	OFFILER	05/09	
Manufacturing Equipment:			
* FINAL ASM MACHINE DEBUG COMPLETION	SELLERS/ ROURTESIS	06/03	
. BASE ASM MACHINE BUILD COMPLETION	SELLERS/ ROURTESIS	05/31	
* PRESSURE TESTER BUILD COMPLETION (SEE DISCUSSION)	SELLERS/ ROURTESIS	05/30 06/06	ORIG. REV.

DISCUSSION

57 L/T AND P/C

. TWO SWITCHES WITH INCIPIENT SNAP DISCS WERE SENT TO GEORGE RANDALL WHO WILL BE PARTICIPATING IN SOME VEHICLE TESTING THIS WEEK. WE PLAN TO INVOLVE THE DISC DEPARTMENT IMMEDIATELY IN CONTINUING THE DEVELOPMENT OF THE INCIPIENT SNAP DISC.

. PRODUCTION SWITCH BUILDS HAVE HIGHLIGHTED A PROBLEM WITH CRIMPING THE ALUMINUM RING. FOR CURRENT BUILDS, VANISHING OIL IS BEING USED.

77P8

. AS HIGHLIGHTED LAST WEEK, A COMBINED IMPULSE/THERMAL CYCLE TEST (12 SWITCHES) WAS CONDUCTED AT 2 CYCLE RATES TO STUDY CONTACTHEATING/EROSION. WHILE ALL SWITCHES PASSED THE TEST, TWO OF THE 12 SETS OF CONTACTS SHOWED SIGNIFICANTLY MORE EROSION AND FILM BUILD-UP THAN THE REST. STEVE IS RE-RUNNING THE TEST WITH CONTACT GAPS SET AT HIGH AND LOW EXTREMES. THE PURPOSE IS TO DETERMINE IF THE HIGH EROSION RATE IS DUE TO EXTENDED ARCING WITH SMALL CONTACT GAPS.

. 5 SOFTWARE-RELATED CALIBRATOR PROBLEMS WILL BE REMEDIED BY MAY 03. AT THAT TIME, WE SHOULD HAVE ALL PRODUCTION COMPONENTS, SO WE CAN RUN A MEANINGFUL CALIBRATOR STUDY. ALSO, THE 57-TO-77 CONVERSION TESTING HAS BEEN PUSHED OUT SO ALL PRODUCTION COMPONENTS CAN BE USED.

THE ASSEMBLY MACHINES AND PRESSURE TESTER ARE PROCEEDING ON SCHEDULE. MECHANIZATION HAS REGAINED TWO WEEKS IN THE PRESSURE T"STER BUILD SCHEDULE, AVERTING A PUSHOUT TO 06/20.

MILESTONES	PLANNED	ACTUAL
57 L/T ISIR	11/21/90	11/21/90
57 L/T JOB 1	09/03/91	
57 P/C ISIR	01/15/91	01/15/91
57 P/C JOB 1	06/03/91	
77PS ISIR	08/01/91	
77PS SOP (TI)	09/01/91	

PRODUCTION PLAN BY MONTH (THOUSANDS) - WITHOUT OVERAGE

	P/C 57PSL5-3	L/T 57PSL5-2	P/C 77PSL2-1	L/T 77PSL2-3
APR	0	0	0	0
MAY	22	2	0	0
JUN	*10 (tentative)	0	0	0
JUL	10 "	2.3	0	0
AUG	10 "	2.3	2	0
SEP	10 "	*2.6	2	0
OCT	0	9.5	**9	2
NOV	0	8.5	25	2
DEC	0	0	25	**9.5

" "E: PLAN FOR AUGUST AND BEYOND IS TENTATIVE.
= JOB1 FOR 57PS VERSIONS
** = TENTATIVE JOB1 FOR 77PS VERSIONS

REGARDS,
DAVE CZARS \20-FORD

Paratech, Inc.

A SUBSIDIARY OF [illegible] CO. INC.
MINATURE TECHNICAL CERAMICS

15340 MINNESOTA AVENUE • P.O. BOX 718 • PARAMOUNT, CALIFORNIA 90723
TELEPHONE (213) 633-2048 • FAX (213) 633-8887

MATERIAL CERTIFICATION

DATE: 4-22-91

TEXAS INSTRUMENTS, INC.

ORDER NO.: 505049981

PART NO : 74078-146 REV. NO.: F

QUANTITY THIS SHIPMENT: 75,000

SHIPMENT DATE: 4-22-91

PART DESCRIPTION: PIN

WE CERTIFY THAT THE MATERIAL USED TO PRODUCE THE PRODUCT IN THIS SHIPMENT, NAMELY PIN / STEATITE - L3 , CONFORMS TO T.I. DRAWING AND T.I. PURCHASE ORDER REQUIREMENTS.

PRODUCTION MANAGER

TRANSFER PIN L.R. 74078

74078

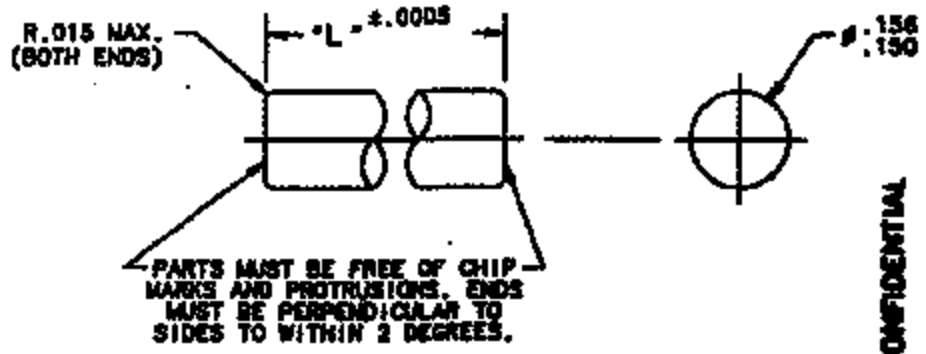

CONFIDENTIAL

"L" LENGTH IS DETERMINED BY THE SUFFIX OF THE PART NUMBER IN THOUSANDTHS OF AN INCH. I.E.:

PART NO.	"L"
74078-155	.155
74078-210	.210

VENDOR WILL BE PREPARED TO FURNISH PINS .130 - .250 LONG.

NOTES:

1. FINISHED PARTS TO BE SHIPPED, ISSUED AND STORED IN SEALED PLASTIC BAGS. SEALED PLASTIC BAGS TO CONTAIN 20,000 PINS(OR LESS FOR PARTIAL BAGS). BAGS MUST BE CLEARLY LABELED WITH THE PART NO. AND THE QUANTITY OF PARTS IDENTIFIED ON THE OUTSIDE OF EACH BAG.
2. MATERIAL CERTIFICATION REQUIRED WITH EACH SHIPMENT.

MATERIAL: L-3 GRADE STEATITE (DC-16E5) OR
L-3 GRADE STEATITE (DC-144E)

CURE PER SPEC.------ 50502-2

SHRINKAGE SPEC.----- 50501-1

CERTIFIED PRINT
ENG. STD. E9898 REL. E
Date JUL 1 1991

THIS DWG. SUPERSEDES 74078 REV. "E" DATED 6-4-86

013 01 M21P373P

DR DATE 10-17-86

TEXAS INSTRUMENTS
ATTLEBORO, MASSACHUSETTS 02703

KLIXON
CONTROL PRODUCTS DIVISION

A

74078

CODE IDENT NO. 82647

PRESSURE SWITCH DATA Form 21605 TEST NO. [illegible]

DEVICE	DATE REQUESTED	REQUESTED BY	REQUESTED COMP. DATE
CCPS Sensors	4-1-91		

PERFORMED BY	DATE STARTED	DATE COMPLETED	APPROVED BY
Jeffrey [illegible]	4-11-91	4-22-91	

PROJECT TITLE: Field [illegible]

CUSTOMER:

PURPOSE OF TEST: To [illegible] be [illegible] the [illegible] enable the [illegible] a [illegible]

PROCEDURE: [illegible] with normal discs, [illegible] inverted discs, [illegible] with normal discs, [illegible] inverted discs. Insert [illegible] transfer pin [illegible]

Serial #	Comp	Disc	Pressure
139-11-01	Inert	Normal	.1042"
01	Inert	Normal	.1019"
139-11-01	Inert	Inverted	.0794"
04	Inert	Inverted	.0790"
139-11-05	Air	Normal	.1088"
11	Air	Normal	.1088"
139-11-05	Air	Inverted	.0955
05	Air	Inverted	.0547

TI-NHTSA 001870

PRESSURE SWITCH DATA Form 21605 TEST NO. [illegible]

DEVICE	DATE REQUESTED	REQUESTED BY	REQUESTED COMPL. DATE
S-PSLS-3	4-27-91		

PERFORMED BY	DATE STARTED	DATE COMPLETED	APPROVED BY
[illegible]	[illegible]	4-27-91	

PROJECT TITLE: [illegible]

CUSTOMER:

PURPOSE OF TEST: [illegible]

PROCEDURE:

DISC 27.0/10.4

[illegible]	[illegible]								
[illegible]	132/67								
"	137/68								
"	137/61								
"	138/63								
"	136/65								
"	136/64								
"	137/62								
"	137/61								
"	137/66								
"	137/65								

AMERICAN ELECTRO PRODUCTS INC.
1358 THOMASTON AVENUE
WATERBURY CT 06704
(203) 758-7061

01764

Certificate of Compliance

NO. 21047268
REL# 1

MILFORD RIVET & MACH
897 BRIDGEPORT AVE

MILFORD CT 06460

DATE 04/24/91

YOUR ORDER NO 1 32704
SHIPPED VIA UNITED P. S.

This is to verify that parts and/or your material furnished against your purchase order number shown above have been manufactured in accordance with requirements and specification as required

PART NO	DESCRIPTION	QUANTITY
6294A	SILVER 0.001100-0.002400 INK	222.220 P

Tests to substantiate this have been performed in our plant or have been performed by our suppliers and are available upon request from us or our suppliers.

Very truly yours
AMERICAN ELECTRO PRODUCTS INC
Signed by [signature]
Q.C. Inspector

BELGIAN METALS CORPORATION
[illegible] NEPPERHAN AVENUE
YONKERS, N.Y. 10701

****
*** CERTIFICATE OF ANALYSIS AND COMPLIANCE ***
****

T. [illegible]

MILFORD RIVET & MACHINE CO.
[illegible] BRIDGEPORT AVENUE
MILFORD, CT. 06460

BMC # [illegible]
P.O.: [illegible]
OUR INVOICE: [illegible]
DELIVERY DATE: [illegible]

[illegible] .0370

[illegible]: [illegible]

[illegible]

[illegible]: B

[illegible] STRENGTH: [illegible]-[illegible] KSI

N.I.A.: %

ELONGATION:

ROCKWELL HARDNESS:

GRAIN SIZE (AT FINAL ANNEAL:

ELECTRICAL CONDUCTIVITY: %

TEMPER DESIGNATION: H01.5

[illegible] ANALYSIS:

CU [illegible]	ZN	PB	FE	SN
AL	MN	NI	SI	P

[illegible]:

CERTIFY THAT THIS SHIPMENT CONFORMS TO THE CHEMICAL AND PHYSICAL [illegible] SHOWN ABOVE, AND IS IN COMPLIANCE WITH THE SPECIFICATIONS [illegible] THIS ORDER

BELGIAN METALS CORPORATION

TI-NHTSA 001873

MOVABLE CONTACT

74408

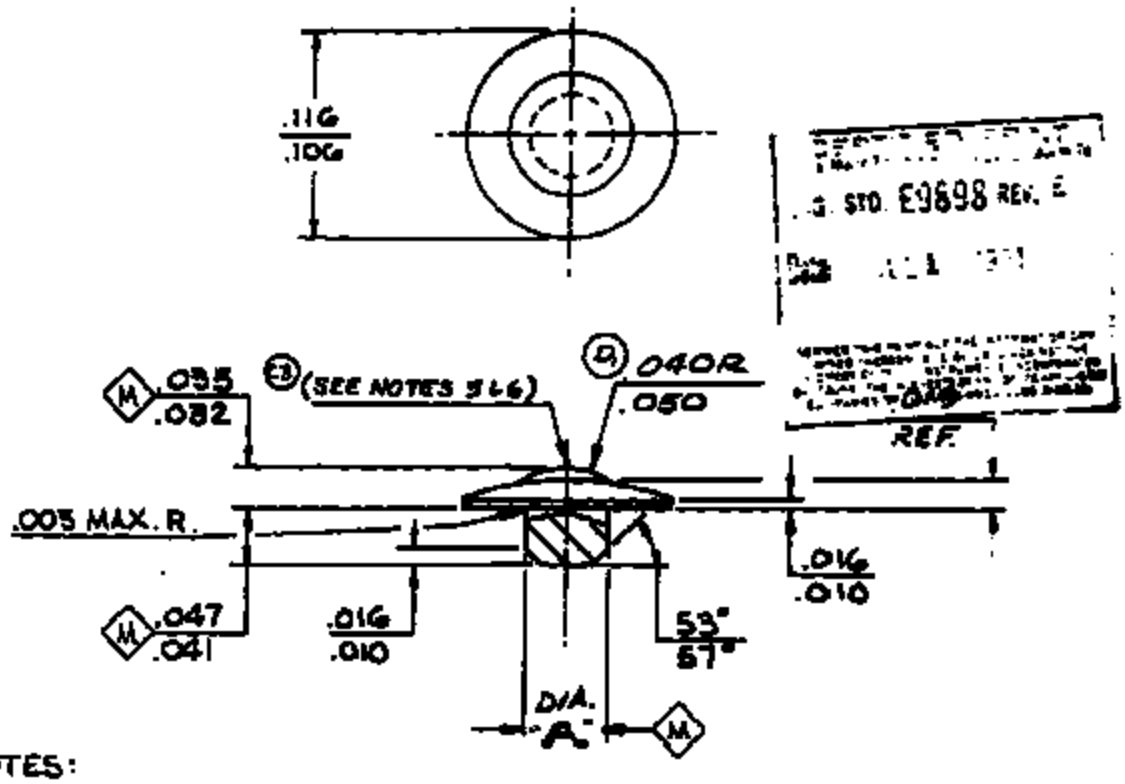

NOTES:

1. PARTS MUST BE STORED IN PLASTIC BAGS THROUGH ALL SHIPPING AND HANDLING PROCESSES.
2. MATERIAL & PLATING THICKNESS CERTIFICATION REQUIRED WITH EACH SHIPMENT.
3. DIMENSIONS APPLY AFTER PLATING.
4. MEASURE PLATING THICKNESS BY MOUNTING & CROSS-SECTIONING PART
5. PLATING THICKNESS APPLIES AT THE INDICATED LOCATION ONLY.
6. TOOL VENT MARK ON .040-.050 R ALLOWED. DIMENSIONS MAY NOT EXCEED .001 IN HEIGHT AND .003 IN WIDTH. THERE MUST BE NO VOID IN PLATING IN THIS AREA. .032-.035 DIMENSION MAY MEASURE .036 OVER THIS MARK.
7. PLATING THICKNESS OF .0007 MINIMUM ALLOWED ABOVE TOOL VENT MARK ONLY. ADJACENT AREAS MUST MEET "FINISH" REQUIREMENTS.

PART NO.	MATERIAL	FINISH (M)	DIA. "A"
74408-1	COPPER	SILVER PLT. .0011/.0024 THK (SEE NOTE #5)	.0605-.06[illegible]

BY T. Dorf 1-6-83
CH. R. Robert 1-13-83
ENG. Ron Rocher 1-13-83

TEXAS INSTRUMENTS INCORPORATED
ATTLEBORO, MASS., U.S.A.

KLIXON

A 74408

TI-NHTSA 001874

PRESSURE SWITCH DATA Form 21605 **TEST NO.** [illegible]

DEVICE	DATE REQUESTED	REQUESTED BY	REQUESTED COMPL. DATE
97PSL 2-1	[illegible]	Steve Off[illegible]	

PERFORMED BY	DATE STARTED	DATE COMPLETED	APPROVED BY
Jeffrey Pi[illegible]	[illegible]	5/8/97	

PROJECT TITLE: Ford MY '92 Thunderbird Speed Control Accelerator PS

CUSTOMER:

PURPOSE OF TEST: Following page

PROCEDURE:

Subtract [illegible] for [illegible]

Device #	Contact Gap	Pin Travel position	assembly	Act/Rel	Hysteresis	Cycle life	Act/Rel	Hysteresis	Pin travel
141-15-01	Low	.091		136/71	11.1		136/77	19.2	.091
02		.092		134/75	16.8		140/77	17.3	.092
03		.093		137/74	12.8		143/73	13.2	.093
04		.092		141/79	13.5		1[illegible]/80	25.9	.092
05		.091		140/72	15.1		141/74	16.3	.091
06		.092		142/74	18.6		142/79	13.2	.092
141-15-07	Normal	.096		135/94	13.9		147/80	19.7	.096
08		.096		137/73	13.3		140/77	15.5	.096
09		.095		140/77	15.3		144/77	16.7	.095
10		.097		146/78	11.5		144/78	16.1	.097
11		.095		148/72	16.4		141/78	20.5	.095
12		.095		138/77	15.9		144/79	19.5	.095
3K interval	Complete								
~~[illegible]~~	Rotate to clockwise								

(OVER)

TI-NHTSA 001875

77PS CONTACT TEST

PURPOSE(S): One, to find out if high-mV-drop devices from previous test were due to excessive test load, due to low contact gap, or due to something else TBD; two, to gain engineering knowledge of the present contact system.

SCOPE: Only the powered portion of the Impulse test will be run, 24K cycles (instead of 25K) at approx. 2 Hz. Twelve 77PS devices will undergo the test, with the loads rotated every 2K such that each device sees each load for an equal time in order to eliminate individual variations. Half of the devices will be pinned such that the contact gap is at a minimum; the other half will be pinned normally.

PROCEDURE:

* Check the load bank using a 'scope to determine if any significant variation exists (based on extreme results on two devices from previous test).

* Build twelve 77PSL2-1 (Pass Car) devices. Use 77PS proto switches. Pin-window each device individually. For the six low-gap devices, try to find a pin length which results in no continuity change. This may be helped if these six are from a calibration lot which measures below .092". Then, back off a few mils, remembering to compensate for the 2 mil shift due to crimp, so we end up with a functional device which is known to have very small contact gap. The other six should be "normal" devices. These too should be individually pinned, hitting roughly the middle of the window w/ crimp compensation.

* Gage each switch before assembly but after pin windows (in case any springs are deformed slightly in the quest).

* Check calibration and mV drop.

* Attach switches to manifold, connect loads, bring oven to normal temps (121 C ambient, 135 C fluid)

* Run 2K cycles at roughly 2 Hz (speed up slightly if needed), then rotate loads and continue, rotating every 2K until 24K cycles is reached.

* Recheck calibration and mV drop.

* Disassemble switches, gage, then inspect contacts.

Filename: 77CONTAX SBO 910425

77PS CONTACT TEST TEST 141-15-12 JAD 5/9/91

DEVICE #	CONTACT GAP	PIN GUAGE		ACT / REL	mV drop		ACT / REL	mV drop	PIN GUAGE
141-15-01	LOW	0.091		136 / 71	11.3	2	136 / 77	19.2	0.091
141-15-02	LOW	0.092	A	142 / 75	16.0	4	141 / 79	17.3	0.092
141-15-03	LOW	0.093	S	137 / 74	12.0	E C	143 / 71	19.2	0.093
141-15-04	LOW	0.092	S	142 / 79	13.5	T	140 / 80	25.4	0.092
141-15-05	LOW	0.091	E	140 / 72	15.1	P C	142 / 79	16.2	0.091
141-15-06	LOW	0.093	M	142 / 74	10.6	O L	142 / 76	18.2	0.093
			B	/		B E	/		
141-15-07	HIGH	0.096	L	145 / 84	13.4	E S	147 / 86	18.1	0.096
141-15-08	HIGH	0.096	T	127 / 73	13.2	E	135 / 77	15.0	0.096
141-15-09	HIGH	0.095		143 / 77	15.3	E	144 / 79	16.7	0.095
141-15-10	HIGH	0.097		146 / 78	11.5	D	144 / 78	16.1	0.097
141-15-11	HIGH	0.095		143 / 72	16.6		142 / 76	20.5	0.095
141-15-12	HIGH	0.095		138 / 77	18.4		143 / 79	19.0	0.095

77PS CONTACT TEST

PURPOSE(S): One, to find out if high-mV-drop devices from previous test were due to excessive test load, due to low contact gap, or due to something else TBD; two, to gain engineering knowledge of the present contact system.

SCOPE: Only the powered portion of the Impulse test will be run, 24K cycles (instead of 25K) at approx. 2 Hz. Twelve 77PS devices will undergo the test, with the loads rotated every 2K such that each device sees each load for an equal time in order to eliminate individual variations. Half of the devices will be pinned such that the contact gap is at a minimum; the other half will be pinned normally.

PROCEDURE:

* Check the load bank using a 'scope to determine if any significant variation exists (based on extreme results on two devices from previous test).

* Build twelve 77PS1.2-1 (Pass Car) devices. Use 77PS proto switches. Pin-window each device individually. For the six low-gap devices, try to find a pin length which results in no continuity change. This may be helped if these six are from a calibration lot which measures below .092". Then, back off a few mils, remembering to compensate for the 2 mil shift due to crimp, so we end up with a functional device which is known to have very small contact gap. The other six should be "normal" devices. These too should be individually pinned, hitting roughly the middle of the window w/ crimp compensation.

* Gage each switch before assembly but after pin windows (in case any springs are deformed slightly in the quest).

* Check calibration and mV drop.

* Attach switches to manifold, connect loads, bring oven to normal temps (121 C ambient, 135 C field)

* Run 2K cycles at roughly 2 Hz (speed up slightly if needed), then rotate loads and continue, rotating every 2K until 24K cycles is reached.

* Recheck calibration and mV drop.

* Disassemble switches, gage, then inspect contacts.

Filename: 77CONTAX SBO 910425

-MSG N#= 397367 FR=CERN TO=PCQA SENT=04/26/91 07:44 AM
R#=023 ST=C DIV=0050 OC=00101 BY=CERN AT=04/26/91 07:44 AM

TO:	RUSTY STRUBLE	RCS2	CC:	TOM CHARBONEAU	TC
	MIKE DeMATTIA	PCQA		JOHN KOURTESIS	NDES
	CHARLIE DOUGLAS	CPPC		STEVE MAJOR	WELS
	DICK GARIEPY	NFPC		ANDY McGUIRK	PCQA
	PAUL KOTCH	PRK1		ED O'NEILL	EJON
	JOE LABARE	JML8		JOE SCHUCK	WELS
	STEVE OFFILER	SBO1		GARY SNYDER	CPPC
	MATT SELLERS	PCME		MARTHA SULLIVAN	CPPC
	BILL SWEET	PCME		RAY TOURANGEAU	PCME
	JIM WATT	PCQA		TED BALLARD	AVRE
	TED BREDIKEN	NFPC		STAN BONOL	SH2
				CLAIRE BAISHAKAR	NFPC
				BILL CONGDON	NFPC
				STEVE MCCOOEY	NDES
FR:	DAVE CERN	ZARE			

SJ: FORD CRUISE CONTROL PRESSURE SWITCH START-UP MEETING:
04/25/91 MEETING MINUTES

MEETING

THE NEXT MEETING IS SCHEDULED FOR:

DATE: 05/03 (FRIDAY) **** PLEASE NOTE CHANGE ****
TIME: 1:00 - 2:30 PM
PLACE: PURCHASING CONFERENCE ROOM

PLEASE CALL ME IF YOU ARE NOT ABLE TO ATTEND

* = ITEMS THAT ARE NEW OR HAVE BEEN REVISED OR COMPLETED SINCE PREVIOUS MEETING

57 L/T	WHO	WHEN	
Hexport:			
* SHIP GAGE/DOCUMENTATION TO ELCO	SELLERS	04/25	ORIG.
		04/25	COMP.
* L/T PILOT RUN (PUSHOUT DUE TO HEXPORT AVAILABILITY)	SELLERS/ GARIEPY	01/24 05/10	ORIG. REV.
* CLOSE W/ELCO RE: THE EXCEPTION THEY NOTED ON THE DOG POINT DIA. ON THE SHUBBER PRINT	KOTCH	04/25 04/25	ORIG. COMP.
* F/U ON ELCO ISSUES RELATED TO THREAD DAMAGE	KOTCH	04/25 04/25	ORIG. COMP.
. RECEIVE RE-ROLLED HEXPORTS	KOTCH	05/02	
* VANISHING OIL TO ELCO	KOTCH	05/02	
* ELCO'S INPUTS ON WHY THE SECOND SHIPMENT OF HEXPORTS WERE IMPROVED AND HOW THIS GETS CARRIED OVER TO FUTURE LOTS	KOTCH	05/09	
* UPDATE HEXPORT SHIPPING SCHEDULE	KOTCH	ONGOING	
* COPY OF FORD'S INSTALLATION TORQUE SPEC (ES20000-S100); SEND TO TIA	SCHUCK	05/09	
* ADVISE ON POULSEN'S HEXPORT QUOTES	KOTCH	05/02	
ISR issues:			
* RELEASE PRINT FROM L/T	SCH	05/09	

* SUBMIT ISR FOLLOW-UP TO FORD SQA (NEED RELEASE PRINT)	WATT	04/04 05/10	ORIG. REV.
. DELIVER 234 PRODUCTION SWITCHES (PARTS NOT NEEDED BY FORD UNTIL MID-MAY)	SELLERS/ BALTHASAR	04/01 05/17	ORIG. REV.
'PDATE TEAM ON AUDIBLE NOISE ISSUE	SCHOCK	ONGOING	
* INCIPIENT SNAP DISC SPEC AND INFO. TO DISC DEPT.	OFFILER	04/18 04/25	ORIG. REV.
* INCIPIENT SNAP SWITCH SAMPLES	OFFILER	04/30 04/18	ORIG. COMP.
57 P/C			
* LETTER TO FORD TO CLOSE ON TERM. POS'N ISSUE FOR ALL 57's	DEMATTIA	04/25 04/30	ORIG. REV.
. ISR SUPPLEMENT FOR SWITCHES W/BROWN OFFSET POLARITY KEY BASES (PUSHOUT DUE TO SREA DELAY)	WATT	04/10 05/02	ORIG. REV.
* MODIFY 57P8 FMEA FOR PITTS	OFFILER	05/09	
* 238 SWITCHES TO PITTS	SELLERS	04/22 04/29	ORIG. REV.
* UPDATE PROD'N PLAN AS SHOWN BELOW, REFLECTING THE SEXPORT DELAY	STNUELE	04/25 04/25	ORIG. COMP.
. SHIP 21K LS-3'S	GARIEPY/ STNUELE	06/03	
77P8			
. DESIGN UPDATE	OFFILER	ONGOING	
. MFG/MECH UPDATE	SELLERS	ONGOING	
. REPORT ON TOXICO P.S. RESPONSIBILITY	DOUGLAS	ONGOING	
. PROD. LINE SET-UP (RTE CARDS, WFC)	BALTHASAR	ONGOING	
'PDATE SPC FILES/RUN CAPABILITY STUDIES	BALTHASAR	ONGOING	
ESTABLISH OVERALL SCHEDULE OF DESIGN ENG. ACTIONS	OFFILER	05/02	
. COMPLETE DESIGN FMEA	OFFILER	04/18 05/30	ORIG. REV.
. COMPLETE PROCESS FMEA	SELLERS	07/01	
* REPEAT IMPULSE TEST AT 2 HZ TO STUDY CONTACT WEAR	OFFILER	04/25 05/02	ORIG. REV.
* TEL CONTACT ANALYSES; SLOW VS. FAST CYCLE RATE	OFFILER	05/02 05/09	ORIG. REV.
* DETERMINE ACCEPTABLE CALIBRATION WINDOW BY DIMENSIONAL ANALYSIS	OFFILER/ SELLERS	03/14 05/09	ORIG. REV.
* VERIFICATION RUN FOR CALIBRATION WINDOW	OFFILER/ SELLERS	03/28 05/16	ORIG. REV.
* F/D CHARACTERIZATION OF SPRING ARMS	OFFILER	04/18 05/09	ORIG. REV.
* GAGING TECHNIQUE FOR IN-PROCESS F/D CHARACTERIZATION OF SPRING ARMS	SELLERS	04/25 05/23	ORIG. REV.
* VISIT EASTERN AUTOMATION RE: SPRING/TERMINAL ASM. MACHINE	SELLERS/ MCCOOEY	04/25 04/25	ORIG. COMP.
. STAKE PROD'N PARTS ON PROD'N STAKER AND MEASURE TERMINAL POSITION	SELLERS	05/02	ORIG.
. 57 TO 77 CONVERSION: PHASE 1 TESTING (PUSHOUT DUE TO COMPONENT AVAILABILITY)	KOHOL	05/30 06/06	ORIG. REV.
. IDENTIFY INSPECTION REQMTS. FOR SOP	WATT	06/01	
. 77P8 QAS (PRELIMINARY)	WATT	07/01	
'77P8 CHARACTERISTICS SHEETS	WATT	07/15	
. GAGE R&R STUDIES	WATT	07/15	
. 77P8 QAS (FINAL)	WATT	08/01	
. SET UP SPC FILES/RUN CAPABILITY STUDIES	BALTHASAR	08/01	

IQP'S:			
* BASE	SELLERS/ OFFILER	02/28 05/09	ORIG. REV.
Production Components:			
'PDATE CUP PRINT	OFFILER	03/28 05/09	ORIG. REV.
* RESOLVE OPEN ISSUES ON MOV. TERM.	SELLERS/ OFFILER	04/04 05/02	ORIG. REV.
* STATIONARY TERM. (KF BASSLER DELIV. DATE PUSH-OUT)	SELLERS	03/22 05/02	ORIG. REV.
* INVESTIGATE INCONSISTENT BEND RADII CALLOUT ON STAT. AND MOV. TERMINALS	OFFILER	04/18 04/25 04/25	ORIG. REV. COMP.
* CLOSE W/BASSLER RE: BEND RADII ON TERMINALS	OFFILER	05/02	
* RESOLVE OPEN ISSUES ON BASE	SELLERS	04/11 05/02	ORIG. REV.
* UPDATE TERMINAL PRINTS/BASE PRINT	OFFILER	05/09	
Manufacturing Equipment:			
. FINAL ASM MACHINE DEBUG COMPLETION	SELLERS/ KOURTESIS	06/03	
. BASE ASM MACHINE BUILD COMPLETION	SELLERS/ KOURTESIS	05/31	
. PRESSURE TESTER BUILD COMPLETION	SELLERS/ KOURTESIS	06/20 06/04	ORIG. REV.

''SCUSSION

57 L/T AND P/C

.

TWO ADD'L LOTS OF NEXPORTS (11.8K TOTAL PCS.) WERE RECEIVED AND MARGINALLY PASSED THE ASSEMBLY TORQUE TEST (4.5 IN-LBS MAX.). ELCO HAS NOT DETERMINED WHY THESE PARTS ARE BETTER THAN THE PREVIOUS LOTS; IN, IT COULD BE RELATED TO PLATING, HANDLING OR MACHINE SET-UP DIFFERENCES, ETC. LONG TERM RESOLUTION OF THE THREAD DAMAGE PROBLEM MAY INCLUDE EVALUATING A HARDER MAT'L OR CHANGING THE PLATING PROCESS. AT LEAST 10K ADD'L NEXPORTS ARE NEEDED WITHIN 2 WEEKS.

.

PRODUCTION SWITCH BUILD HAS BEEN IMPACTED BY OUR INABILITY TO CRIMP THE ALUMINUM RINGS WITHOUT CRACKING THE BASE AND WITHOUT CREATING SLIVERS. THE CRACKING PROBLEM APPEARS TO BE ISOLATED TO THE BROWN (P/C) BASES, AND MAY BE PROCESSING RELATED, AS THIS IS THE FIRST TIME PARTS HAVE BEEN MOLDED WITH BROWN 16621 PBT MATERIAL. THE SLIVER PROBLEM IS RELATED TO THE SHARP EDGES ON THE DRAWN RING; VANISHING OIL HELPS BUT DOESN'T SOLVE THE PROBLEM. MFG. AND DESIGN ENG. ARE WORKING TO RESOLVE THIS CRITICAL ITEM; IT NEEDS TO CONTINUE TO RECEIVE TOP PRIORITY SINCE WE CURRENTLY ARE NOT ABLE TO BUILD P/C SWITCHES, AND THE PRODUCTION PLAN CALLS FOR A 21K SWITCH DELIVERY IN EARLY JUNE.

'S

.

PRELIMINARY SPRINGS RECEIVED FROM EASTERN AUTOMATION SHOWED 2 PROBLEMS: 1. THE .040/.080" RADIUS AT THE BASE OF THE BUMP WAS

ACTUALLY SHARP/PARTIALLY SHEARED AND 2. THE HOLES WERE OVERSIZED. MATT AND STEVE PLAN TO ADDRESS THIS DURING THEIR 04/25 MEETING.

THE L/T PROGRAM RESPONSIBILITY HAS CHANGED HANDS AT FORD - FROM ORGE RANDALL (L/T WGSC ENG.) TO JOHN PELKEY (BRAKE ENG.). JOHN REPORTS TO NEHRU MODI WHO HAS NOT BEEN AN ALLY TO TI IN THE PAST.

MILESTONES	PLANNED	ACTUAL
57 L/T ISIR	11/21/90	11/21/90
57 L/T JOB 1	09/03/91	
57 P/C ISIR	01/15/91	01/15/91
57 P/C JOB 1	06/03/91	
77PS ISIR	08/01/91	
77PS SOP (TI)	09/01/91	

PRODUCTION PLAN BY MONTH (THOUSANDS) - WITHOUT OVERAGE

	P/C 57PSL5-3		L/T 57PSL5-2	P/C 77PSL2-1	L/T 77PSL2-3
APR	0		0	0	0
MAY	22		2	0	0
JUN	*10	(tentative)	0	0	0
JUL	10	"	2.3	0	0
AUG	10	"	2.3	2	0
SEP	10	"	*2.6	2	0
OCT	0		9.5	**9	2
NOV	0		8.5	25	2
DEC	0		0	25	**9.5

* = JOB1 FOR 57PS VERSIONS
** = TENTATIVE JOB1 FOR 77PS VERSIONS

REGARDS,
DAVE CHARN \21-FORD

[redacted] that material meets ordered specification

Size
1 3/8 x 098
PO Number
021540
Mill Number
62276

Belly Dimensions

TEXAS INSTR.
27639-1

QUALITY CONTROL
APR 30 1991
E. BALLO

Heat						AISI			Rockwell		
657196						C-1050			B 74/78		
%C	%Mn	%P	%S	%Si	%Ni	%Cr	%Mo	%Al	%Cu	%V	%Cb
52	78	015	008	23							

Tensile Strength (psi)	.2% Yield Strength (psi)	% Elongation in 2"

Surface	Inclusion Rating	Grain Size
J		

Decarburization	Microstructure

Cold Bend

Transverse to the rolling direction over a	Inches Bend
Perpendicular to the rolling direction over a	Inches Bend

Hardenability	Miscellaneous

I certify that the above data is correct.

Date 4/26/91

Title [illegible]

Sworn to before me this [illegible] day of [illegible]

My commission expires [illegible]

ROME STRIP STEEL

530 Henry St.
Rome, NY 13440

315-339-5500
FAX 315-339-5510

TI-NHTSA 001593

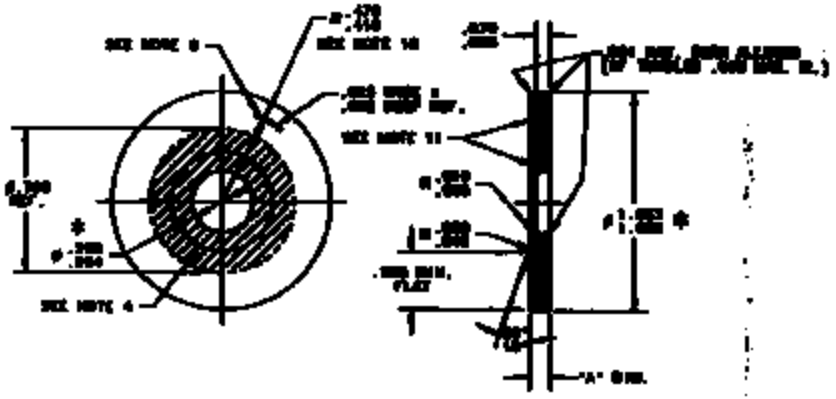

NOTES:

1. PART MUST BE FLAT TO WITHIN [illegible] T.I.R..
2. DIAMETERS MARKED WITH ✱ MUST BE CONCENTRIC TO WITHIN [illegible] T.I.R..
3. [illegible]
4. NO TOOL MARKS ALLOWED IN THE SHADED AREA ON BEVELED SIDE OF WASHER.
5. [illegible]
6. [illegible]
7. MATERIAL CERTIFICATION REQUIRED WITH EACH SHIPMENT.
8. [illegible]
9. DIM. "A" TO BE [illegible]
10. [illegible]
11. [illegible]

TEXAS INSTRUMENTS

WASHER

B 82647 27639

HIGHLIGHTS
Stephen B. Offiler
Week Ending 91-04-26

FORD MY'92 ELECTRONIC SPEED CONTROL DEACTIVATE PS

CUSTOMER ISSUES: We learned from Joe Schuck this week that George Randall at Light Truck has handed pressure switch release responsibility over to a LT Brake Engineer, John Pelkey (analagous to Bruce Pease at Pass Car). John Pelkey's supervisor is the infamous Neru Modi. The 77PS truck print has been updated for terminal position tolerance, and is being sent to Joe, for hand-delivery to John.

We received a returned device from Kelsey-Hayes. We are not treating it as an official RMR, because it failed during a development test (not any official validation testing) while undergoing a salt water submersion test. We immediately responded that A) our device is not submersible, and that B) potential problems with the environmental seal on the mating connector can cause problems which are completely out of our control. We've learned that the device, installed on K-H's prop. valve asm., would not open on pressure rise after 264 cycles of 5 min. submersion in 5% salt water at 100 F followed by 55 min. drying. The device carried 5.5 mA current at 12 VDC during the test, but was not pressure-cycled. The mV drop remained good at about 30-40 mV even after failure. Our failure analysis showed that the disc still snapped, but indeed the contacts did not open. The current leakage was extremely large, so large that an ohmmeter was used rather than a hipot tester; measurement was 40K ohms. Disassembly showed that a rather large amount of salt water had entered the device, and inspection of all potential leak paths showed that entry was via the connector. The transfer pin was stuck, and the hinge side of the movable terminal asm. was severely corroded, explaining the no-continuity-change. The contacts themselves still looked OK, explaining the low mV drop. K-H has requested an 8D, which will be forwarded to them within a couple of weeks.

We have begun to mark-up the existing 57PS FMEA for this program. The only significant work to be done is to remove references to the O-ring seal and replace it with analagous information pertaining to the J512 seal. Other than that, references to "hydraulic oil" are being replaced with "brake fluid."

DESIGN ISSUES: Mfg. Eng. has been experiencing alleged cracked bases during final crimp on 57PSLS-3 (Pass Car, brown color). The problem manifested itself after successfully crimping 57PSLS-2 (Light Truck, black color). Initially it was thought that some difference in material between black and brown may be the culprit. Steve Walters was consulted, and his impression was that any pigmented material would be weaker than natural, but there should be no significant differences between various pigments. I did some experimentation with dye penetrant and sectioning, and discovered that the "cracks" were not propagating through the thickness at all; they were basically a surface phenomenon. Nonetheless, they are a concern cosmetically, because they *look* like cracks. Furthermore, Terry (group leader on 57PS line) mentioned that she sees this occasionally on all color bases and with steel crimp rings, and at some point in history it was proven that these parts are shippable. Matt Sellers pointed out that different cups are used for car and truck; measurement of the critical sensor height showed the car parts are .010" larger. They have opened up the crimp tools to compensate for this, and have had much better success. Matt has singled out a few of the worst ones that still show the "cracks", which we are presently analyzing with dye penetrant. I expect to show that these are again a surface phenomenon and there is no cause for concern

The latest lots of 36900 hexports have arrived, and have been approved. The thread condition remains an issue; it was necessary to send the gage out for fresh calibration to ensure accuracy because these parts do drag on the gage, however they are consistently below the limit of 4.5 in-lbs. They also drag on Weatherhead mating fittings, which tells us that the customer(s) may be unhappy with the thread condition. However, this drag is subjective while the freshly calibrated gage is the objective final arbitrator. We are looking into having Elco build a prototype lot using a higher-carbon material (10B20 vs. present 10L10). To be truly representative of production, this lot must be plated using the production process with production quantities in the barrel, etc.

We are working on the rerun of the 77PS contact test. Jeff has discovered a bad resistor on one of the loads which would have the effect of increasing the inductive kick, which helps explain the two drastically worse parts from the previous test. That test was run in two halves, which is why one bad load would produce two bad parts. Furthermore, Jeff always puts devices on manifolds in order, and the two bad parts were #6 and #12: these two had the same load, which presumably was the bad one.

We received a small quantity of production spring arms (unheat, however) from Eastern Automation. I did a quick analysis of the dimensions, and found the bump is quite poor. They have no transition radius from the plane of the spring to the bump; there is a sharp discontinuity here which would surely lead to cracked arms. Steve McCoosy and Matt Sellers are communicating with EA about this; they have delivered 55PS arms to demonstrate the way the bump should look.

Ted Ballard is working on some very low differential discs to try to meet the need for "quiet" devices. After his first attempts, to get him up the learning curve, we plan to sit down to discuss the results Jeff has had to date along with Ted's results.

cc Donovan
Fyi/Rw

HIGHLIGHTS

Stephen B. Offiler
Week Ending 91-04-26

FORD MY'92 ELECTRONIC SPEED CONTROL DEACTIVATE PS

CUSTOMER ISSUES: We learned from Joe Schuck this week that George Randall at Light Truck has handed pressure switch release responsibility over to a LT Brake Engineer, John Pelkey (analagous to Bruce Pease at Pass Car). John Pelkey's supervisor is the infamous Neru Modi. The 77PS truck print has been updated for terminal position tolerance, and is being sent to Joe, for hand-delivery to John.

We received a returned device from Kelsey-Hayes. We are not treating it as an official RMR, because it failed during a development test (not any official validation testing) while undergoing a salt water submersion test. We immediately responded that A) our device is not submersible, and that B) potential problems with the environmental seal on the mating connector can cause problems which are completely out of our control. We've learned that the device, installed on K-H's prop. valve asm., would not open on pressure rise after 264 cycles of 5 min. submersion in 5% salt water at 100 F followed by 55 min. drying. The device carried 5.5 mA current at 12 VDC during the test, but was not pressure-cycled. The mV drop remained good at about 30-40 mV even after failure. Our failure analysis showed that the disc still snapped, but indeed the contacts did not open. The current leakage was extremely large, so large that an ohmmeter was used rather than a hipot tester; measurement was 40K ohms. Disassembly showed that a rather large amount of salt water had entered the device, and inspection of all potential leak paths showed that entry was via the connector. The transfer pin was stuck, and the hinge side of the movable terminal asm. was severely corroded, explaining the no-continuity-change. The contacts themselves still looked OK, explaining the low mV drop. K-H has requested an 8D, which will be forwarded to them within a couple of weeks.

We have begun to mark-up the existing 57PS FMEA for this program. The only significant work to be done is to remove references to the O-ring seal and replace it with analagous information pertaining to the J512 seal. Other than that, references to "hydraulic oil" are being replaced with "brake fluid."

DESIGN ISSUES: Mfg. Eng. has been experiencing alleged cracked bases during final crimp on 57PSL5-3 (Pass Car, brown color). The problem manifested itself after successfully crimping 57PSL5-2 (Light Truck, black color). Initially it was thought that some difference in material between black and brown may be the culprit. Steve Walters was consulted, and his impression was that any pigmented material would be weaker than natural, but there should be no significant differences between various pigments. I did some experimentation with dye penetrant and sectioning, and discovered that the "cracks" were not propagating through the thickness at all; they were basically a surface phenomenon. Nonetheless, they are a concern cosmetically, because they *look* like cracks. Furthermore, Terry (group leader on 57PS line) mentioned that she sees this occasionally on all color bases and with steel crimp rings, and at some point in history it was proven that these parts are shippable. Matt Sellers pointed out that different cups are used for car and truck; measurement of the critical tensor height showed the car parts are .010" larger. They have opened up the crimp tools to compensate for this, and have had much better success. Matt has singled out a few of the worst ones that still show the "cracks", which we are presently analyzing with dye penetrant. I expect to show that these are again a surface phenomenon and there is no cause for concern.

The latest lots of 36900 hexports have arrived, and have been approved. The thread condition remains an issue; it was necessary to send the gage out for fresh calibration to ensure accuracy because these parts do drag on the gage, however they are consistently below the limit of 4.5 in-lbs. They also drag on Weatherhead mating fittings, which tells us that the customer(s) may be unhappy with the thread condition. However, this drag is subjective while the freshly calibrated gage is the objective final arbitrator. We are looking into having Elco build a prototype lot using a higher-carbon material (10B20 vs. present 10L10). To be truly representative of production, this lot must be plated using the production process with production quantities in the barrel, etc.

We are working on the rerun of the 77PS contact test. Jeff has discovered a bad resistor on one of the loads which would have the effect of increasing the inductive kick, which helps explain the two drastically worse parts from the previous test. That test was run in two halves, which is why one bad load would produce two bad parts. Furthermore, Jeff always puts devices on manifolds in order, and the two bad parts were #6 and #12; these two had the same load, which presumably was the bad one.

We received a small quantity of production spring arms (unbent, however) from Eastern Automation. I did a quick analysis of the dimensions, and found the bump is quite poor. They have no transition radius from the plane of the spring to the bump; there is a sharp discontinuity here which would surely lead to cracked arms. Steve McCooey and Matt Sellers are communicating with EA about this; they have delivered 55PS arms to demonstrate the way the bump should look.

Ted Ballard is working on some very low differential discs to try to meet the need for "quiet" devices. After his first attempts, to get him up the learning curve, we plan to sit down to discuss the results Jeff has had to date along with Ted's results.

Pages containing material that may be inventive must be witnessed by two persons who understand the invention and are not inventors.

Kelsey-Hayes Returned Device Test #193-15-01

Purpose: Determine the root cause of failure.

Nature of failure:

- After 364 cycles of alternate immersion testing, one switch which is normally closed would no longer open.
- Alternate immersion testing consists of submerging the entire valve assembly including the mounted pressure switch, in 5% Saltwater at 100°F for 5 min., then pulling the valve assembly from the water and allowing to dry above the tank for 55 min.
- The pressure switch is not ~~monitored~~ pressure cycled during this test but millivolt drop is monitored and seemed to be normal even after failure.

Analysis:

Visual Inspection:

- Device is a 57 FSC 5-3 (Date Code 0317, Ford Ofr #3VC 9F370 It is a pass-case device built with the first release copy and was part of sample order C0-95. The housport is an SAE 3511 with zinc w/alternate leaded alum. plating. Crimp ring is steel, zinc w/yellow alternate plating. Base is a grey "L" with centered polarity tab.
- The housport's sealing surface is clean as are the threads except for the last one. The rest of the exposed areas of the housport, as well as the exposed

WORK OF: Jeffrey DiDomenico DATE:

I witness this document and understand its contents. | I witness this document and understand its contents.

Pages containing material that may be inventive must be witnessed by two persons who understand the invention and are non-inventors.

15-01

Areas of the cap and crimp ring are severely oxydized as would be expected. The base is relatively clean. The connector cavity has just a hint of salt deposits in the corners. The terminals look to be in good shape and have what seems to be greenish contact grease left on them. The locking tab on one of the terminals seems to be discolored.

Characterization:

- The disc snaps but there is no continuity change between and release values for the disc were taken as well as millivolt drop with disc activated and released:

Disc Snap	Release
Act/Rel	Act/Rel
165/99 ni	325/246 mV

Actuation value is a little high compared to the measurements taken before we shipped the devices.

- Current leakage is excessive, too high to measure at source. Resistance between terminals and crimp ring measures only 40K Ω.

Disassembly:

- Salt penetrated the laser assembly, as pitted on the bottom of the cap. A great deal of corrosion formed around the transfer pin rendering it stuck. The hinge side of the movable terminal was also severely corroded and stuck. The contacts then where still locked on which accounts for the low millivolt drop.

WORK OF: Jeffrey D. Domenico DATE: 4/28/99

I witness this document and understand its contents. | I witness this document and understand its contents.

Pages containing material that may be inventive must be witnessed by two persons who understand the invention and are not co-inventors.

142-15-01

The disc, converter, and washer have some salt on th from where it packed passed the transfer pin. Th hydraulic seal is untouched and the bottom of th hexport is clean.

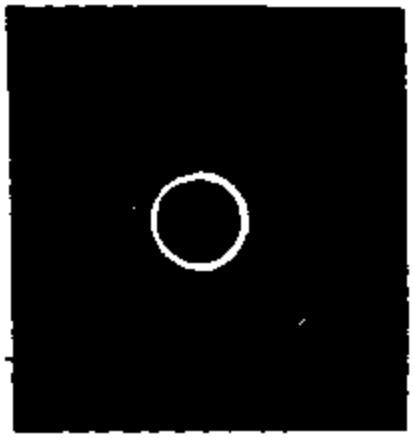

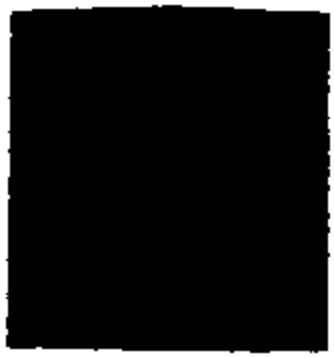

WORK OF: Jeffrey D. Dominic DATE: 4/22/91

I witness this document and understand its contents. | I witness this document and understand its conte

Pages containing material that may be inventive must be witnessed by two persons who understand the invention and are not inventors.

Pr. 15-01

Conclusions: The most likely leak path, judging by the effected areas, is past the mating connector into the switch body. The fluid slowly ran down the terminals, particularly the movable terminal, and puddled on the cap and the hinge of the movable terminal, as well as around the transfer pin. The steel hinge and T-pin account for the lack of continuity change. The good condition of the contacts account for the low millivolt drop. A poor environmental seal in the mating connector is ultimately responsible for the failure.

WORK OF: Jeffrey D. Donovan DATE: 4/20/91

witness this document and understand its contents. | I witness this document and understand its contents.

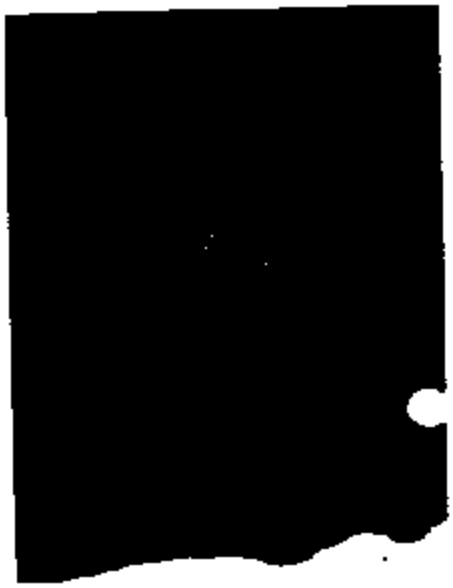

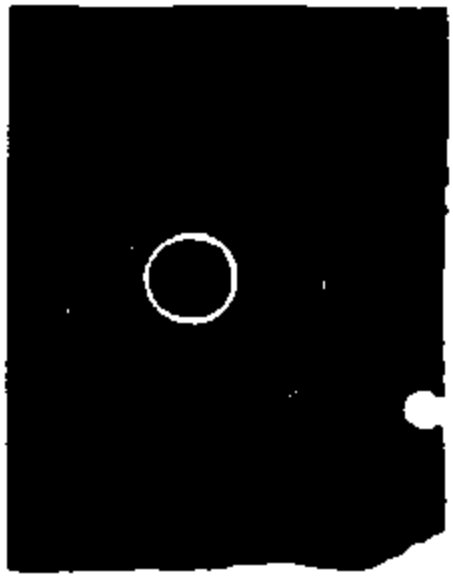

PRESSURE SWITCH DATA Form 21605 TEST NO.

DEVICE	DATE REQUESTED	REQUESTED BY	REQUESTED COMP. DATE
97PSL 1	[illegible]	[illegible]	
PERFORMED BY	**DATE STARTED**	**DATE COMPLETED**	**APPROVED BY**
Jeffrey [illegible]	[illegible]	5/5/[illegible]	

PROJECT TITLE: [illegible]

CUSTOMER

PURPOSE OF TEST: [illegible]

PROCEDURE:

[illegible]	[illegible]	[illegible]	[illegible]	[illegible]	[illegible]	[illegible]	[illegible]	[illegible]	[illegible]
[illegible]	[illegible]	.091	[illegible]	[illegible]	11.1	[illegible]	[illegible]	[illegible]	[illegible]
[illegible]		.092		[illegible]	11.5		[illegible]	12.3	[illegible]
[illegible]		.093		[illegible]	11.5		[illegible]	[illegible]	[illegible]
[illegible]		.092		[illegible]	11.5		[illegible]	[illegible]	[illegible]
[illegible]		.091		[illegible]	[illegible]		[illegible]	[illegible]	[illegible]
[illegible]		.091		[illegible]	10.6		[illegible]	[illegible]	[illegible]
[illegible]	[illegible]	.096	[illegible]	[illegible]	13.4		[illegible]	[illegible]	.096
[illegible]		.096		[illegible]	13.3		[illegible]	13.1	.096
[illegible]		.095		[illegible]	13.3		[illegible]	[illegible]	[illegible]
[illegible]		.094		[illegible]	11.5		[illegible]	[illegible]	[illegible]
[illegible]		.095		[illegible]	11.6		[illegible]	[illegible]	[illegible]
[illegible]		.095		[illegible]	11.7		[illegible]	[illegible]	[illegible]
[illegible]	Complete								
[illegible]	[illegible] check [illegible]								

TI-NHTSA 001894

VALENTINE TOOL & STAMPING, INC.

[illegible] WEST MAIN ST., NORTON, MASS. 02766
(508) 285-8011

MATERIAL CERTIFICATION

DATE : TUESDAY APRIL 30, 199[illegible]

CUSTOMER : TEXAS INSTRUMENTS INC

CUSTOMER P.O. NO : 5[illegible]

SUPPLIER INVOICE [illegible]

PART DESCRIPTION : [illegible] CHIPS RING REV.[illegible]

SUPPLIER PO NO. : [illegible]

QUANTITY SHIPPED : 20,449

SHIPMENT DATE : 04/30/91

WE CERTIFY THAT THE MATERIAL USED
TO PRODUCE THE PRODUCT IN THIS
SHIPMENT, NAMELY
[illegible] 5552 AL [illegible]
CONFORMS TO T.I. DRAWINGS AND
T.I. PURCHASE ORDER REQUIREMENTS.

SIGNED Joanne Lafleur
(Supplier Representative)

Joanne Lafleur Qua Rev Contro[illegible]

TI-NHTSA 001595

VALENTINE TOOL & STAMPING, INC

[illegible] MASS. [illegible]
[illegible]

CERTIFICATE OF CONFORMANCE

DATE : TUESDAY APRIL [illegible]

CUSTOMER : TEXAS INSTRUMENTS INC

CUSTOMER P.O. NO : 505083716 SUPPLIER INVOICE NO. [illegible]

PART DESCRIPTION : 74767-1 CHIMP RING REV.G

SUPPLIER PJO NO. : 18573

QUANTITY SHIPPED : 20,449

SHIPMENT DATE : 04/30/91

WE CERTIFY THAT ALL ITEMS SHIPPED ON THIS ORDER MEET THE REQUIREMENTS OF THE PURCHASE ORDER AND APPLICABLE DRAWINGS/SPECIFICATIONS [illegible] OF REQUIRED MECHANICAL, VISUAL, FUNCTIONAL AND CHEMICAL TESTS [illegible] ON FILE IN OUR QUALITY CONTROL DEPARTMENT.

SIGNED Jeanne LaFlamme
Jeanne LaFlamme
Quality Control Manager

TI-NHTSA 001898

UNITED ALUMINUM CORPORATION

100 UNITED DRIVE - NORTH HAVEN, CONNECTICUT 06473 - (203) 336-5861

UNITED ALUMINUM

VALENTINE TOOL & STAMPING, INC.
171 WEST MAIN STREET
NORTON, MA 02766-0469

ATTN: DICK WHITNEY

DATE 6/18/91
P.O. # 13876
SHIPPED 6/19/91
UA ORDER # 161499

THIS IS TO CERTIFY THAT THE MATERIAL LISTED BELOW CONFORMS WITH THE CHEMICAL COMPOSITION LIMITS OF QQA-250/8F AND THE FOLLOWING ARE THE LIMITS:

AA 5052

CHEMICAL COMPOSITION

	MIN	MAX
SILICON		0.25
IRON		0.40
COPPER		0.1
MANGANESE		0.1
MAGNESIUM	2.2	2.8
CHROMIUM	0.15	0.35
ZINC		0.1
TITANIUM		
OTHER ELEMENTS (EACH)		.05
OTHER ELEMENTS (TOTAL)		.15
ALUMINUM	REMAINDER	

MECHANICAL PROPERTIES

TENSILE STRENGTH	28.3 KSI
ELONGATION IN 2"	20%

.032 2.312 5052-O

UNITED ALUMINUM CORPORATION

TI-NHTSA 001897

TITLE	REV	
CRIMP RING	B	74797

74797

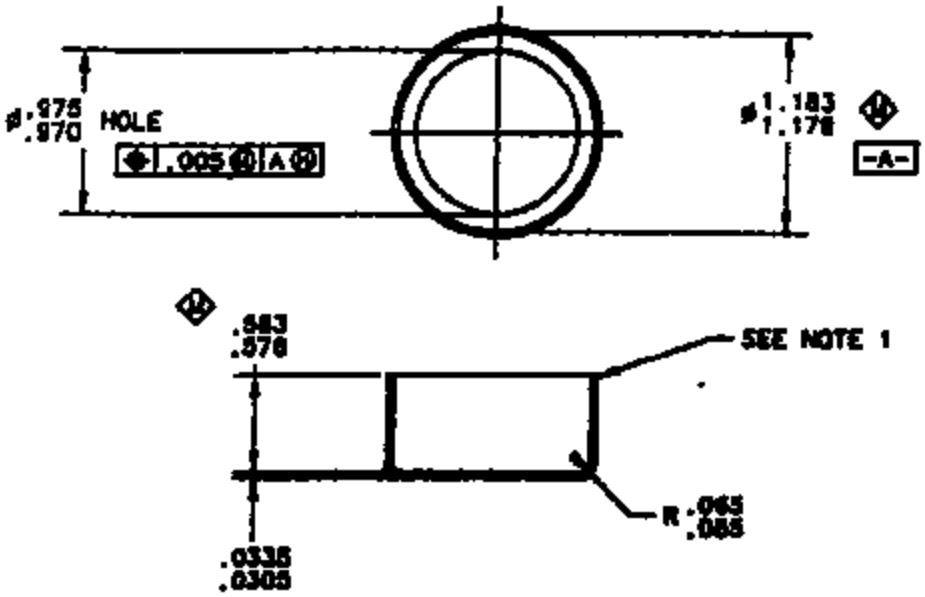

NOTES:
1. PINCH OFF RADIUS ALLOWED.
2. .002 MAX. BURR ALLOWED.
3. PARTS TO BE SHIPPED, ISSUED, AND STORED IN SEALED PLASTIC BAGS.
4. MATERIAL CERTIFICATION REQUIRED WITH EACH SHIPMENT.

CERTIFIED PRINT
Print Made in This Print Shop Conform to
ENG. STD. E9898 REV. E
Date JULY 1991

SUPERSEDES DWG. 74797 REV. A DATED 11-2-90

PART NO.	MATERIAL	FINISH
74797-1	ALUMINUM 5052	

BY DWG RELEASED 11-2-90
CH. 1-30-91
ENG. 1-30-91

TEXAS INSTRUMENTS
ATTLEBORO, MASSACHUSETTS 02703

TI-NHTSA 001[illegible]

Paratech, Inc.

A SUBSIDIARY OF [illegible] CORP. INC.
MINIATURE TECHNICAL CERAMICS

15840 MINNESOTA AVENUE • P.O. BOX 718 • PARAMOUNT, CALIFORNIA 90723
TELEPHONE (213) 633-2045 • FAX (213) 633-8807

MATERIAL CERTIFICATION

DATE: 4-22-91

TEXAS INSTRUMENTS, INC.

ORDER NO.: 505049981

PART NO : 74078-146 REV. NO.: F

QUANTITY THIS SHIPMENT: 75,000

SHIPMENT DATE: 4-22-91

PART DESCRIPTION: PIN

WE CERTIFY THAT THE MATERIAL USED TO PRODUCE THE PRODUCT IN THIS SHIPMENT, NAMELY PIN / STEATITE - L3, CONFORMS TO T.I. DRAWING AND T.I. PURCHASE ORDER REQUIREMENTS.

PRODUCTION MANAGER

TRANSFER PIN

74078

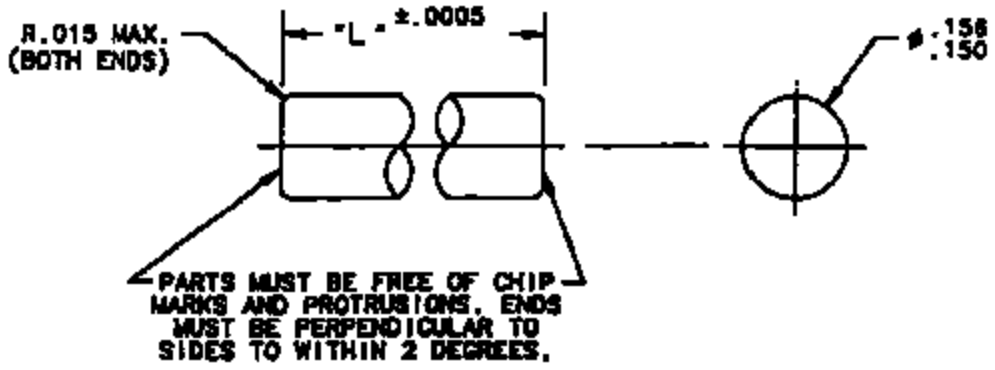

"L" LENGTH IS DETERMINED BY THE SUFFIX OF THE PART NUMBER IN THOUSANDTHS OF AN INCH. I.E.:

PART NO.	"L"
74078-155	.155
74078-210	.210

VENDOR WILL BE PREPARED TO FURNISH PINS .130 - .250 LONG.

NOTES:

1. FINISHED PARTS TO BE SHIPPED, ISSUED AND STORED IN SEALED PLASTIC BAGS. SEALED PLASTIC BAGS TO CONTAIN 20,000 PINS(OR LESS FOR PARTIAL BAGS). BAGS MUST BE CLEARLY LABELED WITH THE PART NO. AND THE QUANTITY OF PARTS IDENTIFIED ON THE OUTSIDE OF EACH BAG.
2. MATERIAL CERTIFICATION REQUIRED WITH EACH SHIPMENT.

MATERIAL: L-3 GRADE STEATITE (DC-156E) OR
L-3 GRADE STEATITE (DC-144E)

CURE PER SPEC.——— 50502-2

SHRINKAGE SPEC.——— 50501-1

CERTIFIED PRINT
Parts Made To This Print Must Conform To
ENG. STD. E9898 REV. E
Date JUL 1 1991

THIS DWG. SUPERSEDES 74078 REV. "E" DATED 9-4-86

												013	01	M21	P12-3

ST. TEST DATE 10-12-86
CH.
ENG. 11-24-87

TEXAS INSTRUMENTS
ATTLEBORO, MASSACHUSETTS 02703

KEYSTONE

A

74078

TI-NHTSA 001900

4 | 3 | 2 | 1

REVISIONS				
ZONE	LTR	DESCRIPTION	DATE	APPROVED
C7	D	11.40-11.68 WAS 11.83-11.44 [illegible]	12-17-90	
D4		40°-50° WAS 30°-80°		
C4		1.10-1.48 WAS 0.38-1.37		
E4		0.25MIN. X 40°-50° WAS 0.23 X 35°-80°		
G3		Ø3.39-3.85 WAS Ø3.91-3.07		
B3		ADDED NOTE		
A5		0.86-0.93 WAS .884-0.88		
	E	ADDED REVISION DETAIL TO PRINT [illegible]	3-13-91	

USE APR 6 1992

BY

REPRODUCTION OF THE INFORMATION CONTAINED HEREIN IS PROHIBITED WITHOUT THE WRITTEN PERMISSION OF TEXAS INSTRUMENTS INCORPORATED OR AMONG THE SUBSIDIARIES OF OR AFFILIATED COMPANIES OR WHOLLY OWNED SUBSIDIARIES

WSS-M99P9999-A1 TO HELP SAFEGUARD HEALTH, SAFETY AND THE ENVIRONMENT

NO. F3DC-9F924-AA

TI-NHTSA 001901

METRIC

UNLESS OTHERWISE SPECIFIED DIMENSIONS ARE IN INCHES	BY TOM DAIL	DATE 7-9-90	TEXAS INSTRUMENTS
TOLERANCE ON FRACTIONS DECIMALS ANGLES ±2°	CK.		TITLE PRESSURE SWITCH ENVELOPE DRAWING
	ENG.		
MATERIAL			
	APPROVED		SIZE D · CODE IDENT NO 82647 · 77PSL5-2
			SCALE 1 · SHEET

DATED 3-5-91

PRESSURE SWITCH DATA Form 21605 **TEST NO.** [illegible]

DEVICE	DATE REQUESTED	REQUESTED BY	REQUESTED COMPL DATE
[illegible] PSL 3-1			

PERFORMED BY	DATE STARTED	DATE COMPLETED	APPROVED BY
Jeffrey DiDeanerr	5-1-91	5-1-91	

PROJECT TITLE: Field [illegible] Electronic Speed Control [illegible] PC

CUSTOMER:

PURPOSE OF TEST: Sample Order [illegible]

PROCEDURE:

Device #	Cable Check
1-13-01-01	OK
02	
03	
04	
05	
06	
07	
08	
09	
10	
11	
12	
13	
14	
15	

(OVER)

SAMPLE ORDER

ORDER NO: [illegible]

REQUEST DATE: [illegible]

CREDIT ACCOUNT: [illegible]

COST CENTER: [illegible]

PRODUCT CODE: [illegible]

CUSTOMER: FORD MOTOR COMPANY

CUSTOMER P.O. NO: 47-X-U54023

TI PART NO: ~~[illegible]~~ 77PSL 2-1

CUSTOMER PART NO: F2VC-9F924-AB

QUANTITY: 15

PRICE: $8.00 EA

DELIVERY PROMISED: 5/03/91

SPECIAL INSTRUCTIONS:

BILL TO:
FORD MOTOR COMPANY
P.O. BOX 1704
DEARBORN, MI 48121

SHIP TO:
FORD MOTOR COMPANY
1600 BAILEY AVE
DEARBORN, MI 48124
ATT'N: DEBBIE NEWMAN

PRODUCTION SAMPLES

XX ENGINEERING DEVELOPMENT SAMPLES

CC: ENGINEERING: STEVE OFFILER

PRODUCTION CONTROL: MARIE CROSSLAND

SALES ENGINEER: JOE SCHUCK

PRESSURE SWITCH DATA Form 21605 **TEST NO.**

DEVICE	DATE REQUESTED	REQUESTED BY	REQUESTED COMP. DATE

PERFORMED BY	DATE STARTED	DATE COMPLETED	APPROVED BY

PROJECT TITLE:

CUSTOMER:

PURPOSE OF TEST:

PROCEDURE:

DISC DEPT. "INCIPIENT" (LOW-DIFF.) DISCS - I

The Disc Dept. has completed its first pass at low differential, quiet discs. Ted Ballard informs us that these actually make some snap sound, but not very much. His measurements are 29.2/23.9 . Our plan for these discs follows:

* Pull a disc at random from the bag and attempt to measure free-disc actuation and release. You should be able to do this, since the Disc Dept could. Assuming you have no trouble hearing the discs, search through the bag until you get three discs which have roughly equivalent act/rel characteristics. If you cannot hear them, then pull three at random. Identify each disc somehow for tracking through the test.

* Do the same thing for three of our standard Light Truck discs.

* Record X-Y curves for each lot of three discs. All six curves on a single piece of paper, as long as it doesn't end up a mess.

* Build into sensors, using standard cup per Light Truck practice. Use old (CMC) J512 hexports just in case these become customer evaluation samples. Attempt to measure act/rel using sound.

* Record X-Y curves for the sensors; again, same piece of paper if possible.

LO 910501

FILE: INCIP.001

DISC DEPT. LOW-DIFF. DISCS II

For the second pass, we will work with the lot of discs with a differential of 2.7 psi. These represent roughly the limit of manufacturability in the Disc Dept.

* Locate the five discs in this lot that were characterized by the Disc Dept. Choose three of them that are closest in characteristics.

* Check act/rel of the free discs (if possible): compare with Disc Dept readings.

* Do X-Y curves of these three discs on same piece of paper.

* Build into sensors using standard cups (light truck).

* Attempt to measure act/rel of sensors using sound; try to get a feel for the relative amount of sound they make.

* Record X-Y curves for each sensor, using separate pieces of graph paper.

The next phases of this test will involve a pin-window type of procedure, as follows.

* From the lot of calibrated 77FS switches measuring about .096", record force at continuity change (transfer) for each. Do the same thing for .088" switches. Try to come up with two, one from each lot, which have roughly equal force. Record these forces and the reference dimensions for each.

* Obtain a complete set of pins from .141 thru .157 (?): check with a micrometer and record values to nearest .0001".

* Working with any one of the three sensors built above, measure the distance from the disc to the cup reference surface and record.

* Add the ref. dim.'s of the .096 switch and the sensor. Starting with a pin slightly below this value, try to record actuation and release. Theoretically, the device will remain open. Move up one pin size and continue. At the pin length where transfer begins to occur, begin to record act/rel until out of pin sizes.

* Change to the .088 switch. Starting with the smallest pin, work through the pin sizes until the device remains closed.

* Tabulate and graph data. For both switch sizes (individually), take the actual switch ref. dim. plus the sensor ref. dim, and subtract this value from the actual pin length, and use the result as the X-axis value to be plotted. Act and Rel are the Y-axis values to be plotted, of course. Plot directly on the hatchet curve for this sensor.

* At this point, we will analyze the results. If this technique looks promising, we will repeat the above for one or both of the other sensors as needed.

So 7/10/97

SENSORS w/ 27.0/12.5 .365

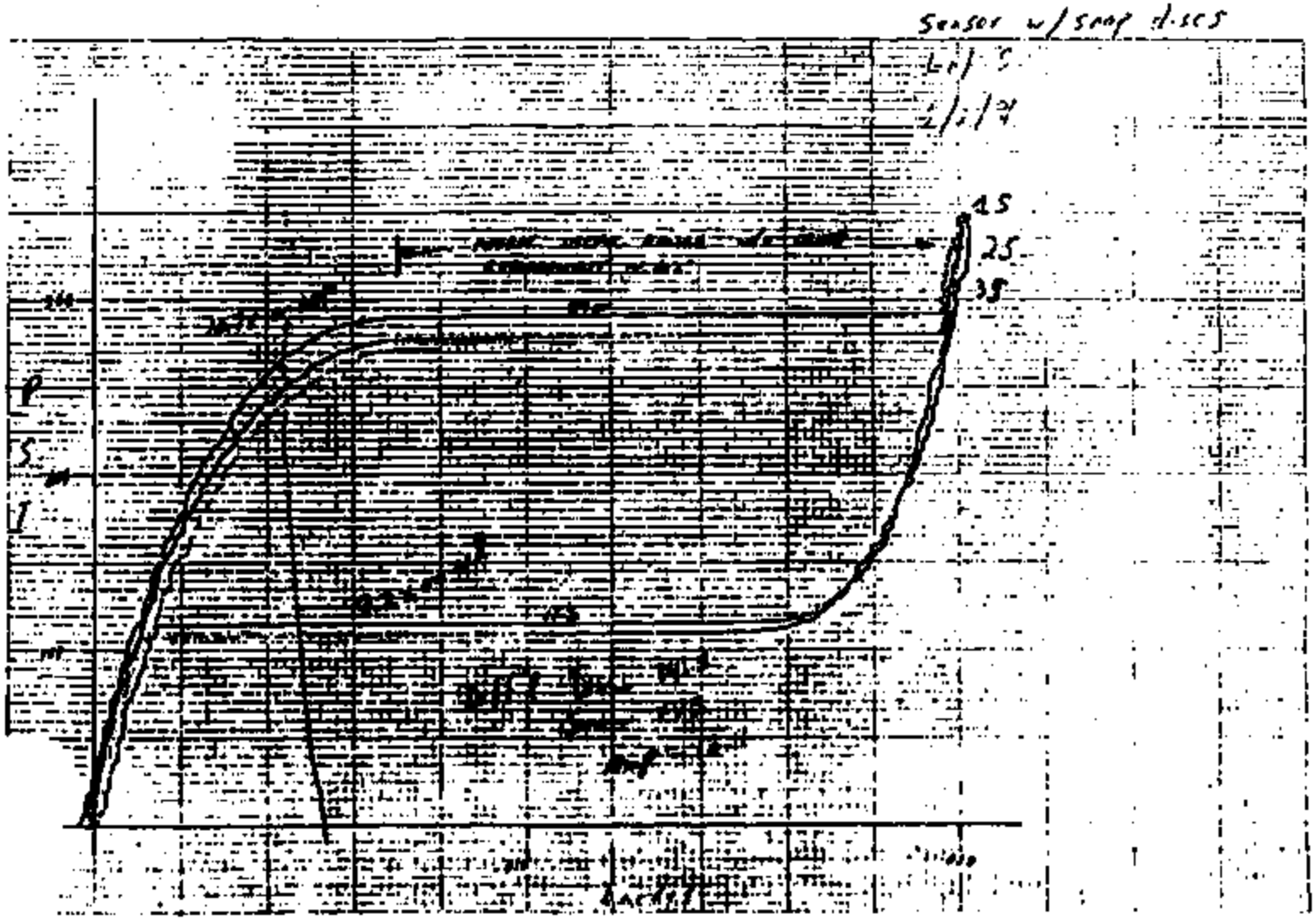

SENSORS w/ 27.0/12.5 SCS

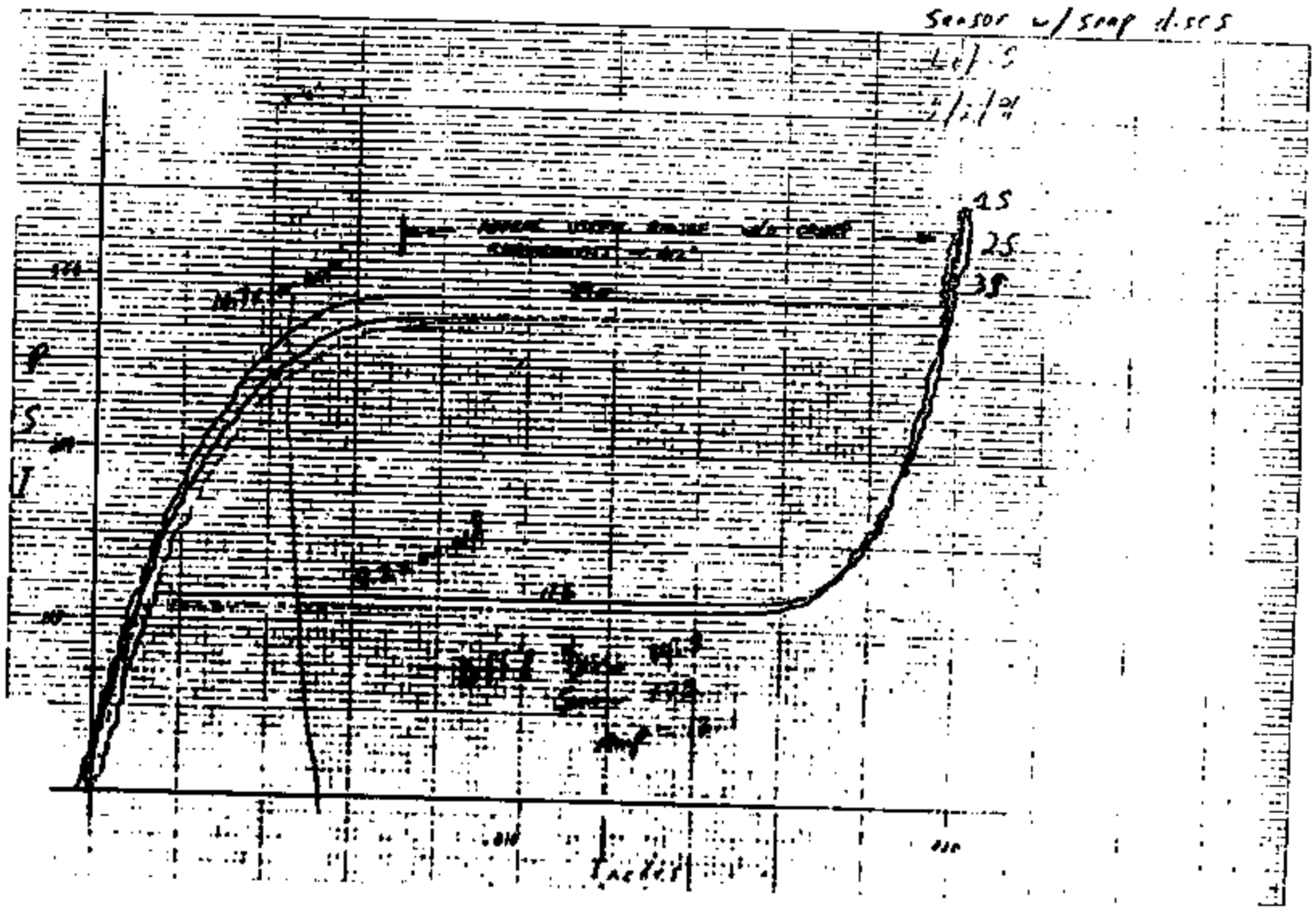

SENSORS BUILT w/ 29.2/23.9 DISCS

SUBJECTIVELY, THESE ARE VERY QUIET BUT NOT SILENT

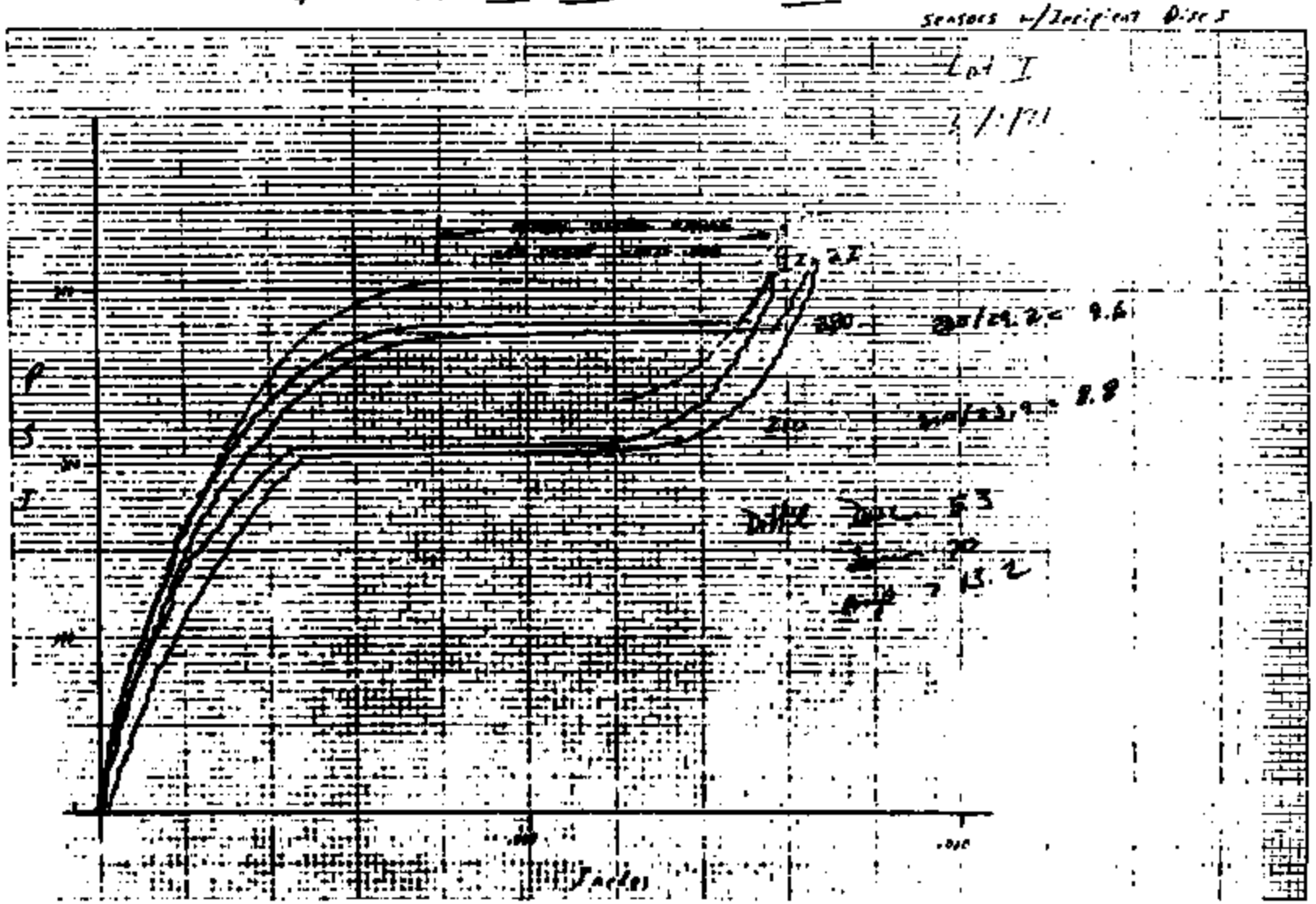

TI-NHTSA 001910