INFORMATION Redacted PURSUANT TO THE FREEDOM OF INFORMATION ACT (FOIA), 5 U.S.C . 552(B)(6)

CL.10496847-5725

Form Approved: O.M.B. No. 2127-0008

U.S. Department of Transportation

National Highway Traffic Safety Administration

DOT Auto Safety Hotline

Vehicle Owner's Questionnaire

To Report Vehicle Safety Defects
1-888-DASH-2-DOT
(1-888-327-4236)
INTERNET:www.nhtsa.dot.gov/hotline

FOR AGENCY USE ONLY 100148

Date Received: 08-FEB-2013

Repository ☐

Reference No. 10496847

OWNER INFORMATION (Type or Print)

Name [redacted]

Address [redacted]

City FORESTVILLE | State CA | Zip Code [redacted]

Daytime Telephone Number [redacted]

Evening Telephone Number [redacted]

E-mail Address [redacted]

The information you provide will be used to identify potential safety-related defects. We may share your information with the applicable vehicle manufacturer during an investigation or recall in accordance with the routine uses described in the agency's Privacy Act notice. See 49 FR 53971 (Sep. 3, 2004).

VEHICLE INFORMATION

17 digit Vehicle Identification Number Located at bottom of windshield on driver's side: SAJDA42B153[redacted]

Make: JAGUAR

Model: XKRCV

Model Year: 2005

Date Purchased: 11-26-07

Dealer's Name and Telephone Number: Jaguar of Marin 415-460-4600

Engine: No: Cylinders 8

Fuel Type: Super

Original Owner ☐

Dealer's City: Corte Madera | State: Calif | Zip Code: 94925

Transmission Type | ☒ Antilock Brakes ☐ Cruise Control | Powertrain

Multiple Failure: No

Incident Date(s): 09-JAN-2013

FAILED COMPONENT(S)/PART(S) INFORMATION

Vehicle Component Code: ENGINE (PWS)
oil cooler line ruptured

Failure Mileage: 61000

Failure Speed: 65

ADDITIONAL ITEMS TO BE COMPLETED WHEN REPORTING A TIRE FAILURE

Tire Make | Tire Model (Name or Number) | Tire Size (Example P215/65R15)

DOT No. (Example: DOTMAL9ABC036) | ☐ Original Equipment ☐ Prior Repair | Failure Location:

Tire Component Code | Tire Failure Type:

ADDITIONAL ITEMS TO BE COMPLETED WHEN REPORTING A CHILD SEAT FAILURE

Make: | Date Manufactured: | Model No./Name:

Seat Type: | Installation System:

Child Seat Component Code: | Failed Part:

APPLICABLE INCIDENT INFORMATION

(Please describe in detail the incident(s), Failure(s), Crash(es), and injury(ies).)

Crash	Fire	Number of Persons Injured	Number of Deaths	Reported to Police
☐ Yes ☒ No	☐ Yes ☒ No	0	0	N

Narrative Description of Incident(S), Crash(es), and Injury(ies).
Please describe (1) events leading up to the failure, (2) failure and its consequences, and (3) what was done to correct the failure; i.e, parts repaired or replaced (and if old part is available).

TL* THE CONTACT OWNS A 2005 JAGUAR XKR. THE CONTACT STATED THAT THE OIL LIGHT ILLUMINATED WHILE DRIVING AT 65 MPH. THE VEHICLE WAS MOVED TO THE SHOULDER WHERE OIL WAS ADDED TO THE ENGINE. UPON ADDING, THE CONTACT NOTICED THAT THE OIL HAD LEAKED. THE VEHICLE WAS TOWED TO THE DEALER WHERE IT WAS FOUND THAT THE OIL COOLER FEED PIPE HOSE LINE HAD FAILED AND THE CYLINDERS WERE DAMAGED BY THE LACK OF OIL. THE VEHICLE WAS NOT REPAIRED. THE MANUFACTURER WAS MADE AWARE OF THE FAILURE. THE FAILURE AND CURRENT MILEAGE WAS 61,000.

Include, if available: Police/Fire Department Report, Photos, and Repair Invoice.

ATTACH ADDITIONAL SHEETS IF NECESSARY

The Privacy Act of 1974-Public Law 93-579 This information is requested pursuant to authority vested in the National Highway Traffic Safety Act and subsequent amendments. You are under no obligation to respond this questionnaire. Your response may be used to assist the NHTSA in determining whether a Manufacturer should take appropriate action to correct a safety defect. If the NHTSA proceeds with administrative enforcement or litigation against a manufacturer, your response, or a statistical summary thereof, may be used in support of the agency's action.

NM
31113
SMD

U.S. Department
of Transportation
**National Highway
Traffic Safety
Administration**

1200 New Jersey Avenue SE
Washington, DC 20590

Dear Consumer:

NVS-216rr

As a follow-up to your report to the Vehicle Safety Hotline (VSH), we have recorded your information on the enclosed Vehicle Owner's Questionnaire (VOQ) form. Please review the form and make changes, additions and corrections as necessary. Additionally, please provide a more detailed description of the failures(s) you reported that you believe relevant to safety. Also, if available, include copies of repair invoices, letters to the manufacturer, or any other document related to the problem(s) you reported. If a crash or fire occurred, include a copy of the police or fire department report.

It is helpful to be as thorough as possible in your report so that our ability to use your report will be maximized. If you do not have the information, it is not necessary to complete all the boxes. However, it is very difficult to identify the scope of a vehicle problem unless the vehicle identification number (VIN) is known. The VIN is located inside the vehicle on the dashboard adjacent to the left (driver's side) of the windshield pillar and on the drivers' door or the driver's door jam. It may also be listed on a dealer repair invoice or your insurance or registration cards. When reporting a tire problem, the brand name, tire line and complete tire size should be included. Be certain to provide the DOT tire identification number. It is usually located near the rim flange of the tire on either side of the tire.

We do not make your personal information (name, address, phone numbers, etc.) available to the general public. However, if we open an investigation that involves your vehicle, we will provide the manufacturer of your vehicle with a complete copy of your report. The information you provide may assist the manufacturer and NHTSA in determining if a safety-related defect exists.

Any information provided is entirely voluntary. There is no consequence or penalty of any kind if you do not wish to provide it. We seek this information to develop both statistical and investigative evidence that will help identify potential safety related problems in vehicles or vehicle equipment, e.g., tires, child safety seats, jacks, etc.

When completed, please fold and staple or tape the form so that the pre-addressed portion of the form is on the outside. If a larger envelope is used, tape the VOQ form to the larger envelope so that the pre-addressed portion of the form is showing.

If further assistance is needed, please contact the VSH at their toll-free number, 1-888-327-4236.

Thank you for your cooperation.

Sincerely,

Randy Reid

Randy Reid Chief
Correspondence Research Division
Office of Defects Investigation
Enforcement

Enclosure: VOQ

NHTSA
www.nhtsa.gov

Subj: **Acknowledgement from NHTSA/ODI of your safety complaint**
Date: 2/8/2013 9:16:09 A.M. Pacific Standard Time
From: donotreplyodi@dot.gov
To: [redacted]

Thank you for filing your safety-related complaint via our Web site or our Vehicle Safety Hotline. The ODI Number listed below will be a direct link to your complaint as soon as it is ready to view. Please allow at least two business days for approval and processing before trying to view your complaint online. You will then be able to view it and search any associated documents.

Your Confirmation number (ODI Number) is: 10496847

Your complaint information will be entered into the NHTSA vehicle owner complaint database. NHTSA technical staff review this information to identify potential safety problems. While you may or may not be contacted by a NHTSA investigator to clarify the information submitted, all reports are reviewed and analyzed for potential defects trends. Also, the NHTSA complaint database provides valuable information to other consumers and to manufacturers.

If you have any questions regarding this complaint, please contact ODI:

- By phone: 1-888-327-4236 Monday-Friday, 8:00AM to 8:00PM Eastern
  TTY: 1-888-424-9153
  Have your ODI Number available.
  (Spanish-speaking operators available)
- By e-mail: http://www-odi.nhtsa.dot.gov/contact.cfm
  Indicate your ODI Number in the contact form.

Thank you,

Office of Defects Investigation (ODI)
National Highway Traffic Safety Administration (NHTSA)
U.S. Department of Transportation (DOT)

Did you know you can receive real-time information about safety recalls? There are two options:

Recall notification via email: http://www-odi.nhtsa.dot.gov/subscriptions/index.cfm?refurl=email

Recall notification via RSS: http://www-odi.nhtsa.dot.gov/rss/index.cfm?refurl=email

To find out more about NHTSA, please go to the Safercar.gov website or call our Vehicle Safety Hotline toll-free at 1-888-327-4236.

Our Privacy Policy can be found at this Web page.

If you have questions regarding these emails, please go to our Contact Web page.

This is a system-generated e-mail. Do NOT respond to the sender of this e-mail.

Subj: **FW: NHTSA: Follow up to ODI Complaint: 10496847**
Date: 2/20/2013 11:29:03 A.M. Pacific Standard Time
From: EVOQ@dot.gov
To: [redacted]

Please see the attached copy of your recent complaint and instructions. Please make any necessary edits and return via email to dataquality@dot.gov or fax to (202) 366-1767. Due to the volume of complaints we receive and our limited resources, we cannot respond to every complaint.

NHTSA/Office of Defects Investigation

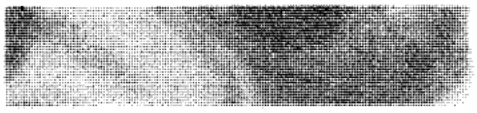

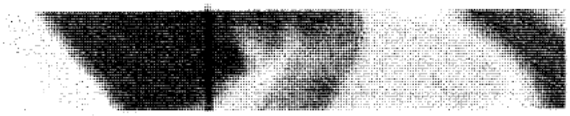

2-20-13

NHTSA

Here is an overview of what happened on 1-9-13 with my car -

I was driving down interstate 101 in Petaluma, Calif when all of a sudden my oil light came on - I was just in the process of making my turn off when my car started to sputter so I saw a gas station ahead one block on started towards it but I knew I couldn't make it so I headed towards an "In & Out Burger parking lot and just made it in before my car stopped - this all happened within 5 or less minutes of the oil light showing on my dashboard.
I went across the ~~the~~ street to a gas station and bought 4 qts of oil - I put the oil

in my car and it went straight thru to the ground -

I called my triple A and asked for a repair shop near where I live -
I chose Benedetti Bros as I did business with them many years ago -
It was towed there and they worked on it a couple of days later -
They told me that there was a service campaign # 303-S 846 on my same year, make and model XKR-CONV but when they called Jaguar Dealer in Corte Madera where I bought my car they were told that the Service campaign expired and that my VIN # wasn't included even though the same thing happened to my car that happened to the Service Campaign - "Oil Cooler hose Ruptured -

I called the Sales Manager at Jaguar of Marin where I bought my car and he (Mr Carico) at 415-460-4600 and he told me to talk with their service manager Brian which I did - He told me that my car wasnt covered because my VIN wasnt listed and that the Service Campaign had expired anyway.

I asked for the Sales Managers name back at the factory in New Jersey (Mr Steve Szabo) Steve told me he couldnt do anything and that I should talk with the dealer where I bought my car - I told him I did already - He said to try again as they couldnt do anything -

I went back and forth for two weeks and finally asked

for an estimate for repair - They called back with a figure of 13,900. - for a rebuilt engine -

I told them to hold off for awhile -
after a few days of not knowing what to do I said to go ahead with repairs -

a couple days later Brian from the Jaguar dealership called me and asked if Benedetti Bros who originally looked at my car had sand my oil hose that ruptured - I called them and they said it had been a month and when they were told it wasn't covered under the Service Campaign they disposed of all the hoses -

I have enclosed paperwork and correspondence that might be helpful -

During the course of owning my car I moved away from the dealership where I bought my car and found a specialist that worked on Jaguar and Mercedes only.

I had them perform my
45,000 miles check-up
50,000 — — —
57,000 — — —
60,000 — — —

Prior to that the Jaguar Dealership in Porte Wales did all my check-ups so I took good care of my car -

Thank you

[redacted]

ASTON MARTIN JAGUAR LAND ROVER

Alischa Wilson
Service Consultant

Aston Martin Jaguar Land Rover
195 Casa Buena Drive, Corte Madera, California 94925
Tel: 415.460.4600 / Dir: 415.496.2128 / Fax: 415.496.2166
alischawilson@marinluxurycars.com

Where I bought my Jaguar —

Thanks

JAGUAR

JAGUAR CARS
555 MacARTHUR BOULEVARD
MAHWAH NJ 07430
T 800 JAGUAR
www.jaguarusa.com

October 2004

RE: S846 Service Action - Oil Cooler Feed Pipe Failure

Dear Jaguar Owner

Jaguar Cars has identified a concern relating to the possibility of the oil cooler feed pipe hose failing. If you are a recipient of this notice, and an owner of one of the vehicles within the VIN range, this letter is to inform you that your vehicle is included in this service action.

The following is a breakdown of the affected vehicles by model and (VIN) range.

- 2004 Jaguar XK/XKR A39699 - A41740

Mine is a 2005 Jag XKR Same problem

What is the concern?

The oil cooler feed pipe hose may fail at the outer crimp of the oil cooler feed pipe/hose, resulting in the possibility of engine oil loss and reduced engine performance.

What will Jaguar and your Jaguar Dealer do?

An authorized Jaguar Dealer will inspect the oil cooler feed pipe/hose for a date code. If the date code is within the affected range the engine oil cooler feed pipe hose will be replaced.

What should you do?

At your earliest convenience you should contact your authorized Jaguar Dealer who will be able to make an appointment to undertake the necessary actions. To assist your Dealer, please ensure that at the time of contact you have at hand your applicable Vehicle Identification Number.

How long will it take?

The time to complete the repair on your vehicle is approximately one hour. However due to vehicle scheduling your Dealer may need to keep your vehicle longer to complete the repair.

Moved or no longer own a Jaguar?

Please fill out the enclosed card and return it to Jaguar by simply putting it in the mail.

Attention Leasing Agencies

Please forward this Service Action notice to the lessee within 10 days.

What should you do if you have further questions?

Please contact your Jaguar Dealer or the Jaguar Customer Relationship Center at 1 800 4JAGUAR (1-800-452-4827), option 9 or by e-mail at jaguarowner@jaguar.com. Should you have the need to contact Jaguar by mail, please address the correspondence to the Jaguar Customer Relationship Center using the above address.

Sincerely yours,

Benjamin I. Warner
Customer Satisfaction Manager

Call [redacted] : [redacted]
Service Mgr
Owner

My car is in your service shop presently -

Ask A Question | My Questions | My Account | Contact Us

just answer. Legal
Ask a Lawyer, Get an Answer ASAP!

TRUSTe CERTIFIED PRIVACY

DO I HAVE ANY GROUNDS FOR RECOURSE AS MY JAGUARS VIN NUMBER

Status: We're Waiting For You
Category: Legal Unfollow
Value: FREE (normally $25)

SMS Text Alerts
SHARE

Asked by you on Monday, February 04, 2013 1:47 AM EST
2 Answered Questions

DO I HAVE ANY GROUNDS FOR RECOURSE AS MY JAGUARS VIN NUMBER DIDNT FALL WITHIN THE RECALL VIN NUMBERS EVEN THOUGH THE SAME PROBLEM WITH THE MAIN OIL HOSE EXPLODING IN MY CAR..SAME YEAR AND MODEL XKR..JAG CLAIMS THEY DONT HAVE ANYTING TO DO WITH RECALLS..THEY SAID I SHOULD CALL THE DEPT OF TRAFFIC..DO I HAVE A CHANCE WITH CALLING THEM?

Optional Information:
Country relating to Question: USA
State (if USA): CALIF
Zip Code (if USA): 95436
What have you tried so far?: I CALL THE FACTORY IN NEW JERSEY AND THEY TOLD ME THEY COULDNT HELP WITH THE RECALL EVEN THOUGH I HAVE THE SAME YEAR..MAKE..AND MODEL AS THE RECALL BUT MY VIN NUMBER ISNT COVERED..EVEN THOUGH THE SAME THING HAPPENED..THE OIL HOSE EXPLODED THEY CANT HELP ME AND THAT I SHOULD CALL THE DEPT OF TRAFFIC..THEY GAVE ME THEIR NUMBER..JAGUAR SAID THEY HAVE NOTHING TO DO WITH RECALLS..THIS COULD AHVE CAUSED A VERY SERIOUS ACCIDENT AS MY ENGINE STOPPED WITHIN 30 SECONDS OF THE OIL LIGHT ON MY CONTROL PANEL LIGHTING UP.

What happens next?

1. **The Experts are working on your answer**
   Watch this page for an update or you can check for a notification in your email.
2. **Read your Expert's answer**
   Ask follow-up questions if needed.
3. **Rate your Expert's answer**
   This will let other customers know about your experience with this Expert.

Satisfaction is fully guaranteed!

Your Expert

William B. Esq.
Attorney
Satisfied Customers: 178

Civil litigation attorney for individuals and businesses.

VERIFIED

View Profile

Expert

You have received an Answer!
From William B. Esq.

Monday, February 04, 2013 6:07 AM EST

Dear Customer.

While the factory itself may be unable to assist you, your local dealer should have more experience with recalls and warranty issues concerning your vehicle. Even if your vehicle's VIN is not covered in the specific recall group, the repair should be covered in one of three ways (1) under the dealer's explanation to the manufacturer contact of the defect and its relation to the recall group - they will likely have more success than you and better contacts; (2) through your auto's warranty; or (3) as a part of the implied warranty of merchantability - the vehicle is not operating as a reasonable consumer would expect it to - this is a safety issue which is not expected to occur in a newer vehicle with proper maintenance. Your dealer will be more accustomed to dealing with these types of issues than the factory and should be able to properly assist you.

I hope that the above information is helpful, if you have any questions, please use the "Reply to Expert Link" and I will follow up promptly. Once you are satisfied with your answer, please rate my service by clicking on the "OK" "GOOD" or "EXCELLENT" buttons, if you believe my service is anything less than "OK" please stop and tell me what additional information or clarification you need to make your experience satisfactory.

If you have any further questions, or if I missed or misunderstood what you were asking, please do ask and I will follow up promptly.

Best regards,
Bill

Jaguar Sales Manager
415-496-2170
David Carico
From: [redacted]

0

where I bought
my Jaguar -

1-5-13

Brian - Service Dept Mgr
Jaguar of Marin - 415-460-4600

Per our conversation this afternoon please find attached work orders you requested -

As you can see I don't drive my Jaguar that often -

I bought it from you on 11-26-07 - it had 29,775 miles

it now has 61,551 miles - I drive my truck most of the time -

You serviced the following:

Came in 24,690 miles - 30K Service 3/13/08
" 30,729 " - Replace oil
" 36,982 " - 40K Service 4/13/09

Fax 415-460-4662

(2)

Hello

autokraft Serviced the following
(Jaguar - Mercedes Repairs only

12/22/09	45,000 mile Service		
11-3-10	50,000	—	—
1-26-12	57,000	—	—
10-10-12	60,000	—	—

I hope you can read the copies

Thank you

[redacted]

B

Autokraft

Your personal Jaguar and Mercedes repair service

400 Yolanda Avenue, Unit F • Santa Rosa, CA 95404 • (707) 577-0101

Date: 10 10 2012

INVOICE: 9830*

Number: 1313

Customer: [redacted]

Ph (res): [redacted]

Ph (work):

Tax: Y

Street: [redacted]

City/State/Zip: FORESTVILLE CA [redacted]

Make/Model: JAGUAR XKR

Year: 05

License: [redacted]

V.I.N. Number: SAJDA42B153[redacted]

Mileage: 61551

Promised: 10 10 2012 P

Completed Date: 10 17 2012

Labor Rate: 120

Mechanic: 01

Part Number	Qty.	Description		Unit Price	Extended Price
M1	7	5W30 MOBIL 1 SYNTHETIC	*	10.36	72.52
C2N3587	1	OIL FILTER	*	19.98	19.98
WS	1	W/S WASH CONCENTRATE	*	3.95	3.95
44K	1	CARBON DISPERSANT	*	19.95	19.95
ENV1	1	ENVIRO/RECYCLE CHARGE*NT	*	5.00	5.00
CBC7083	1	FUEL FILTER	*	47.95	47.95
41921	1	WIPER BLADE 21"	*	22.55	22.55
40721	1	WIPER BLADE 21"	*	18.95	16.95
NJA3558AA	1	AIR FILTER	*	57.00	57.00
AJ63017	1	OIL DRAIN PLUG	*	10.12	10.12
C2S20977	1	FUEL FILTER		78.00	78.00
WT5	2	WHEEL WEIGHTS	*	6.00	12.00
MXD2750AA	1	REAR BRAKE PADS(MINTEX)		149.28	149.28

CODE	WORK PERFORMED	HOURS	AMOUNT
	SERVICE FOR 60,000 MILES		
	REPLACE FUEL & AIR FILTERS	1.8	216.00
106	ANNUAL BRAKE FLUID CHANGE	0.6	72.00
311	SWITCH TIRES FRONT TO REAR	0.3	36.00
306	BALANCE 2 FRONT TIRES	0.3	36.00
402	REPLACE REAR BRAKE PADS	1.0	120.00

Thank You
We Appreciate
Your Business

Total Parts		517.25
Total Labor		480.00
Total Parts & Labor		997.25
Sales Tax	8.50 %	43.54

Previous Invoice 9708

TOTAL $ 1,040.79

PAID [redacted]

ORIGINAL ESTIMATE $

REVISED ESTIMATE REASON

TIME	DATE	PERSON CONTACTED	☐ BY PHONE ☐ IN PERSON	I ACKNOWLEDGE NOTICE AND ORAL APPROVAL OF AN INCRE/ IN THE ORIGINAL ESTIMATED PRICE. CUST. SIGN. X

RECOMMENDED REPAIRS

ALL PARTS ARE NEW UNLESS SPECIFIED OTHERWISE

ALL PARTS REMOVED WILL BE DISCARDED UNLESS INSTRUCTED OTHERWISE ☐ SAVE ☐ DISCARD

CREDIT CARDS ACCEPTED

I hereby authorize the repair work to be done along with the necessary material, and hereby grant your employees permission to operate the vehicle herein described on streets, highways or elsewhere for the purpose of testing and/or inspection. If automobile is returned to customer before authorized service is performed, a diagnostic and handling charge will be made. I have read and understand the below estimate and terms. I authorize service to be performed, including sublet work, and acknowledge receipt of this estimate. **CUSTOMER IS HEREBY NOTIFIED THAT THE SAID PROPERTY IS NOT INSURED OR PROTECTED AGAINST LOSS OCCASIONED BY THEFT, FIRE OR VANDALISM WHILE THE PROPERTY REMAINS WITH THE REPAIR GARAGE.** NOTICE TO CONSUMER: PLEASE READ IMPORTANT INFORMATION ON REVERSE SIDE. CUSTOMER ACKNOWLEDGES RECEIPT OF A COPY HEREOF.
SUBJECT TO CONDITIONS ON REVERSE SIDE OF THIS CONTRACT PLEASE READ REVERSE SIDE.

Autokraft

Your personal Jaguar and Mercedes repair service

400 Yolanda Avenue, Unit F • Santa Rosa, CA 95404 • (707) 577-0101

Date 12 22 2009

INVOICE 9090*

Number 1313 Customer [redacted]

Ph (res) [redacted] Ph (work) Tax Y

Street [redacted]

City/State/Zip FORESTVILLE CA [redacted]

Make/Model JAGUAR XKR

Year 05 License [redacted]

V.I.N. Number SAJDA42B153[redacted]

Mileage 44934

Promised 12 22 2009 P

Completed Date 12 29 2009

Labor Rate 110

Mechanic 01

Part Number	Qty.	Description	Unit Price	Extended Price
M1	7	5W30 MOBIL 1 SYNTHETIC	9.93	69.51
EAZ1354	1	OIL FILTER	18.65	18.65
WS	1	W/S WASH CONCENTRATE	3.95	3.95
44K	1	CARBON DISPERSANT	19.95	19.95
ENV1	1	ENVIRO/RECYCLE CHARGE*NT	5.00	5.00
HJA3835AA	1	SCREW COVER-COWL	9.66	9.66
C2S46862	1	S/C BELT PULLEY	100.10	100.10
C2C37057	1	S/C BELT TENSIONER	135.90	135.90
C2C37055	1	S/C BELT	90.75	90.75
C2C22758	1	BELT IDLER PULLEY	98.00	98.00
C2C37063	1	ACCESSORY DRIVE BELT	68.00	68.00
C2C36146	1	ACCESS BELT TENSIONER	126.00	126.00

CODE	WORK PERFORMED	HOURS	AMOUNT
717	CAR TOWED IN-NO START.		
718	DIAGNOSE NO START CONDITION		
	SCAN FOR CODES-2 THROTTLE SWITCH		
	CODES PRESENT-VISUAL INSPECTION		
	REVEALED RODENT DAMAGED WIRING		
	AT THROTTLE SWITCH & L/F T/SIG LITE	1.0	110.00
	REPAIR WIRING AS NECESSARY	1.5	165.00
	CLEAR CODES		NC
	SERVICE FOR 45,000 MILES	1.0	110.00
	INSTALL FRONT LICENSE PLATE		NC
	REPLACE ACCESSOR DRIVE BELT		
	REPLACE SUPERCHARGER BELT		
	REPLACE TENSIONERS & PULLEYS	3.2	352.00

Thank You We Appreciate Your Business

Total Parts	745.47
Total Labor	737.00
Total Parts & Labor	1,482.47
Sales Tax 9.25 %	68.49
Previous Invoice 8886	
TOTAL $	1,550.96

PAID [redacted]

ORIGINAL ESTIMATE $

REVISED ESTIMATE REASON

TIME	DATE	PERSON CONTACTED	☐ BY PHONE ☐ IN PERSON	I ACKNOWLEDGE NOTICE AND ORAL APPROVAL OF AN INCREA IN THE ORIGINAL ESTIMATED PRICE. CUST. SIGN. X

RECOMMENDED REPAIRS

RODENT MAY STILL BE INSIDE VEHICLE

ALL PARTS ARE NEW UNLESS SPECIFIED OTHERWISE

ALL PARTS REMOVED WILL BE DISCARDED UNLESS INSTRUCTED OTHERWISE ☐ SAVE ☐ DISCARD

CREDIT CARDS ACCEPTED

I hereby authorize the repair work to be done along with the necessary material, and hereby grant your employees permission to operate the vehicle herein described on streets, highways or elsewhere for the purpose of testing and/or inspection. If automobile is returned to customer before authorized service is performed, a diagnostic and handling charge will be made. I have read and understand the below estimate and terms. I authorize service to be performed, including sublet work, and acknowledge receipt of this estimate. **CUSTOMER IS HEREBY NOTIFIED THAT THE SAID PROPERTY IS NOT INSURED OR PROTECTED AGAINST LOSS OCCASIONED BY THEFT, FIRE OR VANDALISM WHILE THE PROPERTY REMAINS WITH THE REPAIR GARAGE.** NOTICE TO CONSUMER: PLEASE READ IMPORTANT INFORMATION ON REVERSE SIDE. CUSTOMER ACKNOWLEDGES RECEIPT OF A COPY HEREOF.

Autokraft

Your personal Jaguar and Mercedes repair service

400 Yolanda Avenue, Unit F • Santa Rosa, CA 95404 • (707) 577-0101

Date: 11 03 2010

INVOICE: 9326*

Number: 1313

Customer: [redacted]

Ph (res): [redacted]

Ph (work):

Tax: Y

Street: [redacted]

City/State/Zip: FORESTVILLE CA [redacted]

Make/Model: JAGUAR XKR

Year: 05

License: [redacted]

V.I.N. Number: SAJDA42B153[redacted]

Mileage: 52258

Promised: 11 03 2010 P

Completed Date: 11 04 2010

Labor Rate: 110

Mechanic: 01

Part Number	Qty.	Description		Unit Price	Extended Price
M1	7	5W30 MOBIL 1 SYNTHETIC	s	10.36	72.52
WS	1	W/S WASH CONCENTRATE	s	3.95	3.95
44K	1	CARBON DISPERSANT	s	19.95	19.95
ENV1	1	ENVIRO/RECYCLE CHARGE*NT	s	5.00	5.00
BF	1	BRAKE FLUID	s	10.45	10.45
BC	1	BRAKE CLEANER	s	6.95	6.95
C2N3587	1	OIL FILTER	s	19.98	19.98
NJA3558AA	1	AIR FILTER	s	52.25	52.25
C2N3428	2	FRONT BRAKE ROTOR		357.50	715.00
MXD1550AB	1	SET FRONT BRAKE PADS(NPN		147.64	147.64
HJA3835AA	1	SCREW COVER-COWL	s	9.66	9.66
7506	4	BULB-BRAKE/TURN SIGNAL	s	3.23	12.92
7528	4	ST/TAIL BULB	s	3.20	12.80

CODE	WORK PERFORMED	HOURS	AMOUNT
	SERVICE FOR 50,000 MILES		
	REPLACE AIR FILTER	1.0	198.00
	CLEAN THROTTLE BUTTERFLY HOUSING	0.5	55.00
106	ANNUAL BRAKE FLUID CHANGE	1.0	110.00
403	RPL.FRONT BRAKE ROTORS & PADS XJ40	1.7	187.00
	REPAIR RODENT DAMAGED WIRING AT		
	RT/HEADLIGHT CONNECTOR	1.0	110.00
	REPLACE 8 TAIL LIGHT BULBS		NC

Thank You
We Appreciate
Your Business

Total Parts		1,090.07
Total Labor		660.00
Total Parts & Labor		1,750.07
Sales Tax	9.25 %	100.37
Previous Invoice	9090	
TOTAL $		1,850.44

PAID [redacted]

ORIGINAL ESTIMATE $

REVISED ESTIMATE REASON

TIME	DATE	PERSON CONTACTED	☐ BY PHONE ☐ IN PERSON

I ACKNOWLEDGE NOTICE AND ORAL APPROVAL OF AN INCREAS IN THE ORIGINAL ESTIMATED PRICE.

CUST. SIGN. X

RECOMMENDED REPAIRS

AIR BAG LIGHT IN ON

ALL PARTS ARE NEW UNLESS SPECIFIED OTHERWISE

ALL PARTS REMOVED WILL BE DISCARDED UNLESS INSTRUCTED OTHERWISE ☐ SAVE ☐ DISCARD

CREDIT CARDS ACCEPTED

WE RESERVE THE RIGHT TO REFUSE ANY PERSONAL CHECKS

I hereby authorize the repair work to be done along with the necessary materiel, and hereby grant your employees permission to operate the vehicle herein described on streets, highways or elsewhere for the purpose of testing and/or inspection. If automobile is returned to customer before authorized service is performed, a diagnostic and handling charge will be made. I have read and understand the below estimate and terms. I authorize service to be performed, including sublet work, and acknowledge receipt of this estimate. **CUSTOMER IS HEREBY NOTIFIED THAT THE SAID PROPERTY IS NOT INSURED OR PROTECTED AGAINST LOSS OCCASIONED BY THEFT, FIRE OR VANDALISM WHILE THE PROPERTY REMAINS WITH THE REPAIR GARAGE.** NOTICE TO CONSUMER: *PLEASE READ IMPORTANT INFORMATION ON REVERSE SIDE. CUSTOMER ACKNOWLEDGES RECEIPT OF A COPY HEREOF.* SUBJECT TO CONDITIONS ON REVERSE SIDE OF THIS CONTRACT PLEASE READ REVERSE SIDE.

CUST. SIGN. X

I ACKNOWLEDGE RECEIPT OF AND AGREE TO THE TERMS AND CONDITIONS OF THIS CONTRACT.

Printed 02-05-2012 12:22 PM

READ IMPORTANT INFORMATION ON REVERSE SIDE

Autokraft

400 Yolanda Avenue, Unit F • Santa Rosa, CA 95404 • (707) 577-0101

Date 01 26 2012

INVOICE 9644*

Number 1313 Customer [redacted]

Ph (res) [redacted] Ph (work) [redacted] Tax Y

Street [redacted]

City/State/Zip FORESTVILLE CA [redacted]

Make/Model JAGUAR XKR

Year 05 License [redacted]

V.I.N. Number SAJDA42B153[redacted]

Mileage 57103

Promised 01 26 2012 P

Completed Date 01 26 2012

Labor Rate 120

Mechanic 01

Part Number	Qty.	Description	Unit Price	Extended Price
C2N3587	1	OIL FILTER	19.98	19.98
M1	7	5W30 MOBIL 1 SYNTHETIC	10.36	72.52
WS	1	W/S WASH CONCENTRATE	3.95	3.95
44K	1	CARBON DISPERSANT	19.95	19.95
ENV1	1	ENVIRO/RECYCLE CHARGE*NT	5.00	5.00
XR850990	1	WIPER BLADE L	32.00	32.00
C2C25323	1	WIPER BLADE RT	32.00	32.00

CODE	WORK PERFORMED	HOURS	AMOUNT
	SERVICE @ 57,000 MILES	1.0	120.00
	STRAIGHTEN ANTENNA MAST		NC
	REPLACE WIPER BLADES		NC

Thank You We Appreciate Your Business

Total Parts		185.40
Total Labor		120.00
Total Parts & Labor		305.40
Sales Tax	8.50 %	15.33

Previous Invoice 9356

TOTAL $ 320.73

PAID [redacted]

ORIGINAL ESTIMATE $

REVISED ESTIMATE REASON

TIME	DATE	PERSON CONTACTED	☐ BY PHONE ☐ IN PERSON

I ACKNOWLEDGE NOTICE AND ORAL APPROVAL OF AN INCRE IN THE ORIGINAL ESTIMATED PRICE.

CUST. SIGN. X

RECOMMENDED REPAIRS

ALL PARTS ARE NEW UNLESS SPECIFIED OTHERWISE

CREDIT CARDS ACCEPTED

WE RESERVE THE RIGHT TO REFUSE ANY PERSONAL CHECKS

ALL PARTS REMOVED WILL BE DISCARDED UNLESS INSTRUCTED OTHERWISE ☐ SAVE ☐ DISCARI

I hereby authorize the repair work to be done along with the necessary material, and hereby grant your employees permission to operate the vehicle here described on streets, highways or elsewhere for the purpose of testing and/or inspection. If automobile is returned to customer before authorized service performed, a diagnostic and handling charge will be made. I have read and understand the below estimate and terms. I authorize service to be performed, includi sublet work, and acknowledge receipt of this estimate. **CUSTOMER IS HEREBY NOTIFIED THAT THE SAID PROPERTY IS NOT INSURED OR PROTECTE AGAINST LOSS OCCASIONED BY THEFT, FIRE OR VANDALISM WHILE THE PROPERTY REMAINS WITH THE REPAIR GARAGE.** NOTICE TO CONSUME PLEASE READ IMPORTANT INFORMATION ON REVERSE SIDE. CUSTOMER ACKNOWLEDGES RECEIPT OF A COPY HEREOF.

SUBJECT TO CONDITIONS ON REVERSE SIDE OF THIS CONTRACT PLEASE READ REVERSE SIDE.

CUST. SIGN. X

I ACKNOWLEDGE RECEIPT OF AND AGREE TO THE TERMS AND CONDITIONS OF THIS CONTRACT.

Printed 02-05-2013 12:32 PM

READ IMPORTANT INFORMATION ON REVERSE SIDE

MARIN LUXURY CARS
195 Casa Buena Drive
Corte Madera, CA 94925
(415) 460-4600 · Fax: (415) 460-4662
www.marinluxurycars.com

JAGUAR LAND ROVER

EPA# CAD981683998 BAR# AM214052

UNIT# P0958
CUSTOMER #:53[redacted]

149899

WORKORDER

PAGE 2

[redacted]
FORESTVILLE, CA [redacted]
HOME: [redacted] BUS:

SERVICE ADVISOR: 105 WILSON,ALISCHA

COLOR	YEAR	MAKE/MODEL	VIN	LICENSE	MILEAGE IN/ OUT	TAG
GREEN	05	JAGUAR XKR CV 00-02	SAJDA42B153[redacted]		36982/	T171

DEL DATE	PROD. DATE	WARR. EXP.	PROMISED	PO NO.	RATE	PAYMENT	INV. DATE
18JUN05 IS	17SEP04	30MAY2009	** WAITER **		0.00	CASH	

R.O. OPENED	READY	OPTIONS: STK:P0958
13APR2009 10:38		

LINE	OP CODE	TECH.	TYPE	DESCRIPTIONS/INSTRUCTIONS
# A	RECALL		WJ	PERFORM RECALL J004
# B	A85		CJ	CUSTOMER STATES RANDOM WARNING MESSAGES COME ON MESSAGE CENTER ALL THE TIME. CHECK AND ADVISE
# C	102040		WJS	PERFORM 40000 MILE SERVICE PER CUSTOMER REUQEST
# D	MPI		CJ	COMPLIMENTARY MULTI-POINT INSPECTION
# E	SW		CJ	COMPLIMENTARY WASH AND VACUUM

THIS IS NOT AN INVOICE

BY LAW, YOU MAY CHOOSE ANOTHER LICENSED SMOG CHECK FACILITY TO PERFORM ANY NEEDED REPAIRS OR ADJUSTMENTS WHICH THE SMOG CHECK TEST INDICATES ARE NECESSARY.

SUBJECT TO TERMS AND CONDITIONS LISTED ON REVERSE SIDE. PLEASE READ REVERSE SIDE.

I hereby authorize the repair work herein set forth to be done with the necessary material and agree that you are not responsible for any delays caused by unavailability of parts or delays in parts shipments by the supplier or transporter. I hereby grant you and/or your employees permission to operate the vehicle herein described on streets, highways or elsewhere for the purpose of testing and/or inspection. An express mechanic's lien is hereby acknowledged on the above vehicle to secure the amount of repairs thereto. I hereby appoint MARIN LUXURY CARS as my attorney in fact and empower you to negotiate and cash any draft or instrument issued in payment of this repair order by any third party in my name and to sign my name thereto. Receipt of vehicle described herein for repair of alteration is hereby acknowledged by dealer. Said customer is hereby notified that the said property, or its contents, is not insured or protected to the amount of actual cash value thereof, or otherwise, by the undersigned dealer against loss occasioned by theft, fire or vandalism while the property remains with the dealer. Customer states no articles of personal property have been left in the vehicle, and the dealer is not responsible for inspection thereof. Customer will be responsible for payment of reasonable attorney fees and costs in the event suit is brought for collection. I authorize warranty work to be performed on my vehicle. In the event that any work performed is not accepted for warranty payment by the manufacturer, then I, the customer, will be held responsible for the outstanding balance. This agreement in no way limits your warranty coverage. If this situation does occur, then you will receive documentation of denied warranty for your records.

PRELIMINARY ESTIMATE $

WHICH INCLUDES A HAZARDOUS WASTE DISPOSAL FEE OF $

AUTHORIZED BY: X

TERMS: CASH OR APPROVED CREDIT CARDS UNLESS PRIOR ARRANGEMENTS HAVE BEEN MADE

CUSTOMER ESTIMATE

ALL PARTS REMOVED WILL BE DISCARDED UNLESS OTHERWISE REQUESTED PRIOR TO BEGINNING WORK. ALL PARTS ARE NEW UNLESS OTHERWISE SPECIFIED.

*DESIGNATION OF PERSON TO AUTHORIZE ADDITIONAL WORK OR PARTS

I hereby designate the individual named below to authorize any additional work not specified or parts not included in the original written estimated once for parts and labor:

Name of Designee: _____ Phone Number: _____

Fax Number: _____ E-Mail Address: _____

Date: _____ (Customer's Signature)* _____

DATE	TIME	PHONE # OR IN PERSON	AUTHORIZED BY	ADDITIONAL AMOUNT
REASON				REVISED TOTAL
DATE	TIME	PHONE # OR IN PERSON	AUTHORIZED BY	ADDITIONAL AMOUNT
REASON				REVISED TOTAL

Notice to Consumer: Please read important information on back.

er: 53[redacted]

Invoice No: **139549**

INVOICE

MARIN LUXURY CARS

195 Casa Buena Drive
Corte Madera, CA 94925
(415) 460-4600
Fax: (415) 460-4662
www.marinluxurycars.com

JAGUAR

LAND ROVER

[redacted]
FORESTVILLE, CA [redacted]
Home: [redacted] **Bus:** **Cell:**
Email: 26NOV07

SERVICE ADVISOR: **105 ALISCHA WILSON**

COLOR	YEAR	MAKE/MODEL	VIN	LICENSE	MILEAGE IN/ OUT	TAG
GREEN	05	JAGUAR XKR CONVERT (	SAJDA42B153[redacted]		24690 24694	T3942

DEL DATE	PROD. DATE	WARR. EXP.	PROMISED	PO NO.	RATE	PAYMENT	INV. DATE
26NOV07			17:00 19MAR08		0.00	DISC	20MAR08

R.O. OPENED	READY	OPTIONS: STK-P0958
10:45 13MAR08	16:58 20MAR08	

SECTION	OPCODE	TECH	TYPE	NET	TOTAL

A - PERFORM 30000 MILE INTERVAL SERVICE AS PER CUSTOMER REQUEST
CAUSE: 30K
102082

	269	**WJS**	(N/C)
	1	C2N3587 FILTER-OIL	(N/C)
	1	~~AJ83017 PLUG-DRAIN~~	(N/C)
	8	E-45 10W30 BLEND SYNTEC	(N/C)

FC: PART#: COUNT:
CLAIM TYPE:
AUTH CODE:
MISC HAZARDOUS WASTE
WJS (N/C)
MISC ADMIN ALLOWANCE
WJS (N/C)

PARTS: 0.00 **LABOR:** 0.00 **OTHER:** 0.00 **TOTAL LINE A:** $ 0.00

24690 30K PERFORMED 30K SERVICE. FRONT BRAKES AT 6MM REAR AT 5MM. FRONT TIRES AT 6/32 BUT FOUND PASS SIDE TO HAVE A BULDGE ON SIDE WALL AND DRIVERS SIDE TO BE CRACKED ALL THE WAY AROUND SIDEWALL REC NEW FRONT TIRES. CHK ALL FLUIDS HOSES AND BELTS. ALSO FOUND SOME OIL LEAKING FROM REAR DIFF COVER. OIL LEAKING BAD. REC NEW REAR DIFF.

****

B CUSTOMER STATES FRONT DRIVERS WINDOW IS SLOW TO ROLL UP AND GOES OFF TRACK LETTING WATER LEAK INTO VEHICLE WHERE SEALS MEET. CHECK AND ADVI
CAUSE: WINDOW REG
G07

	269	**WJ**	(N/C)
	402	**WJ**	(N/C)
	1	GJA1731AD MOTOR-WINDOW REG	(N/C)
	1	PRDD WARR PARTS RETURNED-DEVIN GJA-1731AD	(N/C)

FC: PART#: COUNT:
CLAIM TYPE:
AUTH CODE:

PARTS: 0.00 **LABOR:** 0.00 **OTHER:** 0.00 **TOTAL LINE B:** $ 0.00

24690 WINDOW REG VERIFIED CUSTOMERS CONCERN WITH DRIVERS WINDOW. TOOK DOOR PANEL OFF TO INSPECT WINDOW REGULATOR AND FOUND IT BINDING UP WHEN GOING UP. DID NOT HAVE PARTS IN STOCK HAD TO ORDER WAITING TO FINISH JOB. REPLACE WINDOW REG. AND MOTOR ADJ. AS NEED TEST OK

Customer Copy

PAYMENT IN FULL REQUIRED PRIOR TO RELEASE OF VEHICLE

METHOD OF PAYMENT WE ACCEPT THE FOLLOWING: CASH MASTERCARD VISA AMX COMPANY OR PERSONALIZED CHECK $2,000.00 WITH THE FOLLOWING

1) CHECK GUARANTEE CARD
2) VALID DRIVERS LICENSE

NOTICE TO CUSTOMER
I acknowledge notice an oral approval of any additional customer or warranty work performed and/or increase in the original estimate price. I also acknowledge and approve all repairs as itemized and/or receipt of vehicle. I also acknowledge receipt of additional consumer warranty and service information contained in the Parts & Service Warranty Disclaimer.

ORIGINAL ESTIMATE $ _____ AUTHORIZED REVISED ESTIMATE $ _____

DESCRIPTION	TOTALS
LABOR AMOUNT	
PARTS AMOUNT	
GAS, OIL, LUBE	
SUBLET AMOUNT	
MISC. CHARGES/ADJ.	
TOTAL CHARGES	
LESS AMOUNT	
SALES TAX	
PLEASE PAY	

MARIN LUXURY CARS

195 Casa Buena Drive
Corte Madera, CA 94925
(415) 460-4600 · Fax: (415) 460-4662
www.marinluxurycars.com

JAGUAR

EPA# CAD981683998 BAR# AM214052

UNIT# P0958
CUSTOMER #:53[redacted]

[redacted]

FORESTVILLE, CA [redacted]
HOME: [redacted] BUS:

139549

WORKORDER

PAGE 2

SERVICE ADVISOR: 105 WILSON,ALISCHA

COLOR	YEAR	MAKE/MODEL	VIN	LICENSE	MILEAGE IN/ OUT	TAG
GREEN	05	JAGUAR XKR CONVERT (	SAJDA42B153[redacted]		24690/	T3942

DEL DATE	PROD. DATE	WARR. EXP.	PROMISED	PO NO.	RATE	PAYMENT	INV. DATE
26NOV07 IS			17:00 13MAR08		0.00	CASH	

R.O. OPENED	READY	OPTIONS: ~~STK:P0958~~
13MAR2008 10:45		

LINE	OP CODE	TECH.	TYPE	DESCRIPTIONS/INSTRUCTIONS
# ~~A~~	~~LOF~~		CD	~~REPLACE ENGINE OIL, OIL FILTER AND SUMP WASHER~~
	30K.			30K SERVICE.
# B	G07		WJ	CUSTOMER STATES FRONT DRIVERS WINDOW IS SLOW TO ROLL UP AND GOES OFF TRACK LETTING WATER LEAK INTO VEHICLE WHERE SEALS MEET. CHECK AND ADVISE
# C	LOANER		CJ	SUPPLY LOANER CAR
# D	A85		CJ	SUPPLY AND PROGRAM ONE MASTER KEY AND ONE REMOTE PER CUSTOMER REQUEST
	EST: TOTAL 375.00			
# E	S15		WJ	CUSTOMER STATES DRIVERS SEAT HEAD REST DOES NOT ALWAYS ADJUST AND THERE IS A GRINDING NOISE WHEN ACTIVATING. CHECK AND ADVISE

THIS IS NOT AN INVOICE

BY LAW, YOU MAY CHOOSE ANOTHER LICENSED SMOG CHECK FACILITY TO PERFORM ANY NEEDED REPAIRS OR ADJUSTMENTS WHICH THE SMOG CHECK TEST INDICATES ARE NECESSARY.
SUBJECT TO TERMS AND CONDITIONS LISTED ON REVERSE SIDE. PLEASE READ REVERSE SIDE.

I hereby authorize the repair work herein set forth to be done with the necessary material and agree that you are not responsible for any delays caused by unavailability of parts or delays in parts shipments by the supplier or transporter. I hereby grant you and/or your employees permission to operate the vehicle herein described on streets, highways or elsewhere for the purpose of testing and/or inspection. An express mechanic's lien is hereby acknowledged on the above vehicle to secure the amount of repairs thereto. I hereby appoint MARIN LUXURY CARS as my attorney in fact and empower you to negotiate and cash any draft or instrument issued in payment of this repair order by any third party in my name and to sign my name thereto. Receipt of vehicle described herein for repair of alteration is hereby acknowledged by dealer. Said customer is hereby notified that the said property, or its contents, is not insured or protected to the amount of actual cash value thereof, or otherwise, by the undersigned dealer against loss occasioned by theft, fire or vandalism while the property remains with the dealer. Customer states no articles of personal property have been left in the vehicle, and the dealer is not responsible for inspection thereof. Customer will be responsible for payment of reasonable attorney fees and costs in the event suit is brought for collection. I authorize warranty work to be performed on my vehicle. In the event that any work performed is not accepted for warranty payment by the manufacturer, then I, the customer, will be held responsible for the outstanding balance. This agreement in no way limits your warranty coverage. If this situation does occur, then you will receive documentation of denied warranty for your records.

PRELIMINARY ESTIMATE $

WHICH INCLUDES A HAZARDOUS WASTE DISPOSAL FEE OF $

AUTHORIZED BY: X

TERMS: CASH OR APPROVED CREDIT CARDS UNLESS PRIOR ARRANGEMENTS HAVE BEEN MADE

CUSTOMER ESTIMATE

ALL PARTS REMOVED WILL BE DISCARDED UNLESS OTHERWISE REQUESTED PRIOR TO BEGINNING WORK. ALL PARTS ARE NEW UNLESS OTHERWISE SPECIFIED.

"DESIGNATION OF PERSON TO AUTHORIZE ADDITIONAL WORK OR PARTS

I hereby designate the individual named below to authorize any additional work not specified or parts not included in the original written estimated price for parts and labor:

Name of Designee: _____ *Phone Number:* _____

Fax Number: _____ *E-Mail Address:* _____

Date: _____ *(Customer's Signature)"* _____

DATE	TIME	PHONE # OR IN PERSON	AUTHORIZED BY	ADDITIONAL AMOUNT
REASON				REVISED TOTAL
DATE	TIME	PHONE # OR IN PERSON	AUTHORIZED BY	ADDITIONAL AMOUNT
REASON				REVISED TOTAL

Notice to Consumer: Please read important information on back.

BUYERS GUIDE

IMPORTANT: Spoken promises are difficult to enforce. Ask dealer to put all promises in writing. Keep this form.

JAGUAR	XKRCV	2005	SAJDA42B153[redacted]
VEHICLE MAKE	MODEL	YEAR	VIN

P0958

DEALER STOCK NUMBER (optional)

[redacted]

WARRANTIES FOR THIS VEHICLE:

☐ **AS IS-NO WARRANTY**

YOU WILL PAY ALL COSTS FOR ANY REPAIRS. The dealer assumes no responsibility for any repairs regardless of any oral statements about this vehicle.

XXXX XXXX **WARRANTY**

☐ FULL ☒ LIMITED WARRANTY. The dealer will pay 0 % of the labor and 0 % of the parts for the covered systems that fail during the warranty period. Ask the dealer for a copy of the warranty documents for a full explanation of warranty coverage, exclusions, and the dealer's repair obligations. Under state law, "implied warranties" may give you even more rights.

SYSTEMS COVERED:	DURATION:	
MANUFACTURER'S WARRANTY STILL APPLIES	4yrs or 50,000	6/18/05
THE MANUFACTURER'S ORIGINAL WARRANTY		
HAS NOT EXPIRED ON THIS VEHICLE.		6/17/09
CONSULT MANUFACTURER'S WARRANTY BOOKLET		
FOR DETAILS AS TO WARRANTY COVERAGE,		
SERVICE LOCATION, ETC.		
VEHICLE HAS SELECT EDITION WARRANTY	2yrs or 10,000	6/17/11
	min of 30 days or 1000 miles prior to exp	

XX SERVICE CONTRACT. A service contract is available at an extra charge on this vehicle. Ask for details as to coverage, deductible, price, and exclusions. If you buy a service contract within 90 days of the time of sale, state law "implied warranties" may give you additional rights.

PRE PURCHASE INSPECTION: ASK THE DEALER IF YOU MAY HAVE THIS VEHICLE INSPECTED BY YOUR MECHANIC EITHER ON OR OFF THE LOT.

SEE THE BACK OF THIS FORM for important information, including a list of some major defects that may occur in used motor vehicles.

858-485-9763
415-496-2168
Jerome Lubinski
Alesha Wilson

Customer Number: 53[redacted]

Invoice No: **149899**

INVOICE

MARIN LUXURY CARS
195 Casa Buena Drive
Corte Madera, CA 94925
(415) 460-4600
Fax: (415) 460-4662
www.marinluxurycars.com

[redacted]

FORESTVILLE, CA [redacted]
Home: [redacted] **Bus:** **Cell:**
Email: 18JUN05

JAGUAR LAND ROVER

SERVICE ADVISOR: **105 ALISCHA WILSON**

COLOR	YEAR	MAKE/MODEL	VIN	LICENSE	MILEAGE IN/ OUT	TAG
GREEN	05	JAGUAR XKR CV 00-02	SAJDA42B153[redacted]		36982 36982	T171

DEL DATE	PROD. DATE	WARR. EXP.	PROMISED	PO NO.	RATE	PAYMENT	INV. DATE
18JUN05	17SEP04	30MAY2009	WAIT 13APR09		0.00	CASH	13APR09

R.O. OPENED	READY	OPTIONS: STK:P0958
10:38 13APR09	15:34 13APR09	

```
LINE OPCODE TECH TYPE HOURS                                   LIST      NET      TOTAL
A PERFORM RECALL J004
     RECALL PERFORM OPEN CAMPAIGN AFTER CHECKING LRNA
              108   WJ                                                          (N/C)
PARTS:      0.00  LABOR:      0.00  OTHER:      0.00   TOTAL LINE A:           0.00

36982 PERFORMED JOO4, REFLASHED ECM & TCM
            ***************************************************
B CUSTOMER STATES RANDOM WARNING MESSAGES COME ON MESSAGE CENTER ALL
        THE TIME. CHECK AND ADVISE
     A85 OTHER ELECTRICAL TROUBLES
              108   CJ                                                   0.00    0.00
PARTS:      0.00  LABOR:      0.00  OTHER:      0.00   TOTAL LINE B:           0.00

36982 FOUND COOLANT LIGHT,BRAKE LIGHT & SRS ON,TOPPED OFF COOLANT &
COOLANT LIGHT WENT OFF,TOPPED OFF BRAKE FLUID & BRAKE LIGHT WENT OFF,NO
COMMUNICATION WITH SRS MODULE, RETRIED COMMUNICATION, STILL WOULD NOT
COMMUNICATE. CUSTOMER NOT ABLE TO LEAVE VEHICLE AT THIS TIME. WILL NEED
TO RESCHEDULE
            ***************************************************
C PERFORM 40000 MILE SERVICE PER CUSTOMER REUQEST
CAUSE: X
     102083 40,000 MILE (64,000 KM) ROUTINE SERVICE
              108  WJS                                                          (N/C)
         1 C2N3587 FILTER-OIL                                                   (N/C)
         8 E-45 10W30 BLEND SYNTEC                                              (N/C)
         1 AJ83017 PLUG-DRAIN                                                   (N/C)
         1 NJA3558AA ELEMENT                                                    (N/C)
         1 C2S1638 CLEANER-GLASS                                                (N/C)
         1 C2C37055 BELT-DRIVE                                                  (N/C)
MISC HAZ WASTE
                   WJS                                                          (N/C)
         FC: X
MISC ADMIN ALLOWANCE
                   WJS                                                          (N/C)
```

Customer Copy

PAYMENT IN FULL REQUIRED PRIOR TO RELEASE OF VEHICLE

METHOD OF PAYMENT WE ACCEPT THE FOLLOWING: CASH MASTERCARD VISA AMX COMPANY OR PERSONALIZED CHECK $2,000.00 WITH THE FOLLOWING

1) CHECK GUARANTEE CARD
2) VALID DRIVERS LICENSE
3) NAME AND ADDRESS

NOTICE TO CUSTOMER

I acknowledge notice an oral approval of any additional customer or warranty work performed and/or increase in the original estimate price. I also acknowledge and approve all repairs as itemized and/or receipt of vehicle. I also acknowledge receipt of additional consumer warranty and service information contained in the Parts & Service Warranty Disclaimer.

ORIGINAL ESTIMATE $ _____ AUTHORIZED REVISED ESTIMATE $ _____

CUSTOMER SIGNATURE

DESCRIPTION	TOTALS
LABOR AMOUNT	
PARTS AMOUNT	
GAS, OIL, LUBE	
SUBLET AMOUNT	
MISC. CHARGES/ADJ.	
TOTAL CHARGES	
LESS AMOUNT	
SALES TAX	
PLEASE PAY THIS AMOUNT	

Notice to Consumer: Please read important information on back.

EPA# CAD981683998 BAR# AM214052

Jaguar of Marin
My dealership
in Corte Madera

(1)

2-8-13

David Carico / Brian (Service Dept)
James Ludwick - Steve Szabo (New Jersey)

I wanted to let you know what direction I'm pursuing -

I today call the National Hiway Safety admin Hot line in regards to my 2005 Jaguar. I dont need to go into detail as I know your familiar with my vehicle problem -

I am filing a complaint with them in regards to my situation with my car -

My conformation number is # 104968847 in which you will receive a copy -

By the way I received encorrect information from your office telling me that

- Steve Szabo 201-818-9781
David Carico 415-460-4662 (Brian)

you were not responsible for recalls - you told me that the Dept of Transportation is responsible and gave me their tele number.

They claim the Mfg is responsible and also for what VIN numbers are assigned -

I feel I have been more than patient and at this point have not gotten any help with this situation -

I am a very reasonable person to deal with but my patience is running out.

Here is a rundown of what is transpiring so far on this very serious and potentially deadly problem that could have

happened on the freeway if I wasn't in the slow lane right by a turnoff -

This all happened within 2-3 minute before my car died -

If Jaguar doesn't want to do anything and I'm not a threatening type person I fully intend to obtain an attorney - I hope it doesn't come to that point.

You haven't had even a loaner for me in three weeks so my Enterprise car rental expense is up to $ 1050.00 as of today -

Here are my expenses so far due to this situation:

1- Bonadette Bros Repair Service (Towed)
for check-up $947.59

2- Rental Car Enterprise $1050.00 so far

3- Your quote for repairs 13,900.-

approx 15,897.59

My car is worth approx 20,000.-

http://www.webpagescreenshot.info/i/256723-129201340653pm.png

My Vin #
53 [redacted]

Service Action S846

Model	Year	VIN Range
XK8	2004 MY	**42**A39699 - **42A40264**
XKR	2004 MY	**43**A39699 - **43A40264**
XK8	2005 MY	**52A40265** - **52**A41740
XKR	2005 MY	**53A40265** - **53**A41740

Program Code	Option	Description	SRO	Time	Part Number	Part Description	Qty
S846	A	Check date code - no further action required	10.10.99	0.2 hrs.	-	-	-
S846	K	Check date code – no further action required	10.10.99	0.2 hrs.	-	-	-
		Drive in/drive out	10.10.10	0.1 hrs.			
S846	B	Check date code and replace feed and return pipe/hoses	12.92.14	0.7 hrs.	C2N 2208 MJE 7461AB KSR 609001 ZZZ001	Oil cooler feed pipe/hose Oil cooler return pipe/hose O-Ring Top up oil	1 1 2 $5.00
S846	C	Check date code and replace feed and return pipe/hoses	12.92.14	0.7 hrs.	C2N 2208 MJE 7461AB KSR 609001 ZZZ001	Oil cooler feed pipe/hose Oil cooler return pipe/hose O-Ring Top up oil	1 1 2 $5.00
		Drive in/drive out	10.10.10	0.1 hrs.			

Note: Always perform a DDW claim search first to determine whether this service action has been performed on this vehicle. The "Review Claim History" function will provide a listing of all claims against the vehicle. If this service action number appears in the program code field, do not perform this service action.

Alisha Wilson - Jaguar
415-496-2166

31. Lubricate the oil cooler feed and return pipe/hoses O-ring seals.
32. Reposition and align the oil cooler feed and return pipe/hoses to the engine port.
33. Reconnect the oil cooler feed pipe/hoses to the engine port.
34. Reposition and install the oil cooler pipe/hose retaining plate.
35. Install and tighten the retaining plate securing bolt.
36. Clean spillage from the front of the engine.
37. Remove the drain tray from under the vehicle.
38. Reinstall the undertray.
39. Lower the vehicle.
40. Start and run the engine until the oil pressure rises.
41. Turn off the engine.
42. Check, and if necessary, top up the engine oil.
43. Remove the exterior vehicle protection and close hood and door.

Global Technical Reference (GTR) Workshop Manual Information:

Dealer access: https://hub.franchise.jaguar.com

Internet access: http://www.jaguartechinfo.com

Parts Information:

DESCRIPTION	PART NUMBER	QTY
Oil cooler feed pipe/hose (includes O-ring)	C2N 2208	1
Oil cooler return pipe/hose (includes O-ring)	MJE 7461AB	1
O-Ring	KSR 609001	2

Warranty Information:

Warranty claims should be submitted quoting program code S846 together with the appropriate option code from the table below. This will result in payment of the stated time and where applicable parts/miscellaneous expense codes.

The options that allow for drive in/drive out can only be claimed if the vehicle has been brought into the workshop for this action alone to be undertaken.

The SROs, parts and miscellaneous items have been included for information only; there will be no requirement to enter the parts, SROs and miscellaneous items onto the claim.

21. Undo and remove the oil cooler return pipe/hose to intermediate connector-securing bolt, (Illustration 5).

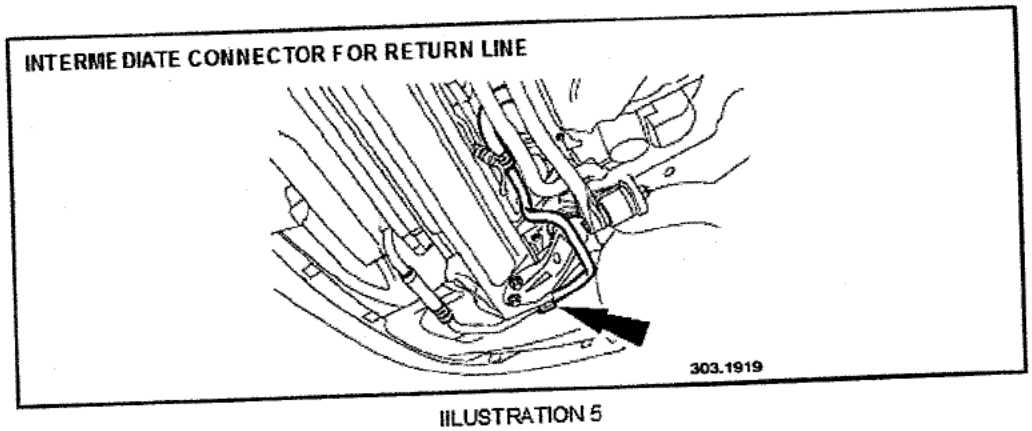

ILLUSTRATION 5

22. Disconnect and remove the oil cooler return pipe/hose from the intermediate connector.
23. Displace and discard oil cooler pipe O-ring seal.
24. Install suitable blanking plugs to cooler pipe/hoses.
25. Place the new oil cooler return pipe/hose to the front.
26. Displace and remove the blanking plugs from the cooler pipe/hose.
27. Install and fully seat the new O-ring seal to the cooler return pipe/hose.
28. Lubricate the new O-ring seal.
29. Reposition and align the oil cooler return pipe/hose to the intermediate connector and reconnect.
30. Install and tighten intermediate connector securing bolt (Illustration 6).

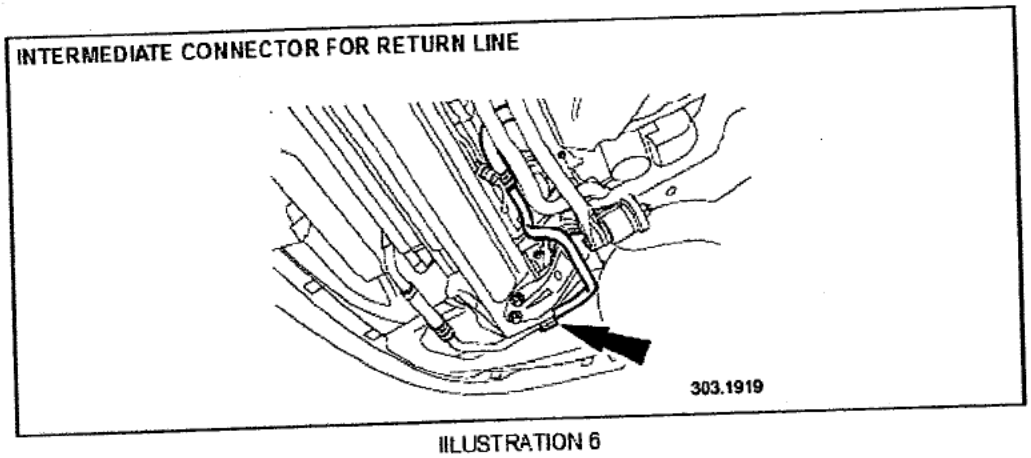

ILLUSTRATION 6

8. Remove the retaining plate.
9. Disconnect the oil cooler feed and return pipe/hoses from the front of the engine port.
10. Install suitable blanking plugs to the front of the engine port and oil cooler pipe/hoses.
11. Remove the oil cooler feed pipe/hose to intermediate connector-securing bolt (Illustration 3).

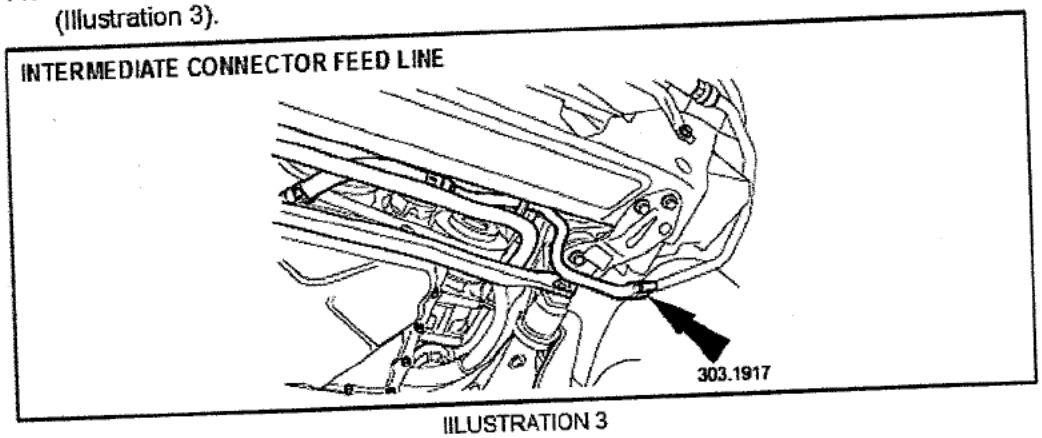

ILLUSTRATION 3

12. Disconnect and remove the oil cooler feed pipe/hose from the intermediate connector.
13. Displace and discard oil cooler pipe O-ring seal.
14. Install suitable blanking plugs to cooler pipe/hoses.
15. Place the new oil cooler feed pipe/hose to the front.
16. Displace and remove the blanking plugs from the cooler pipe/hose.
17. Install and fully seat the new O-ring seal to the cooler feed pipe/hose.
18. Lubricate the new O-ring seal.
19. Reposition and align the oil cooler feed pipe/hose to the intermediate connector and re-connect.
20. Install and tighten intermediate connector securing bolt (Illustration 4).

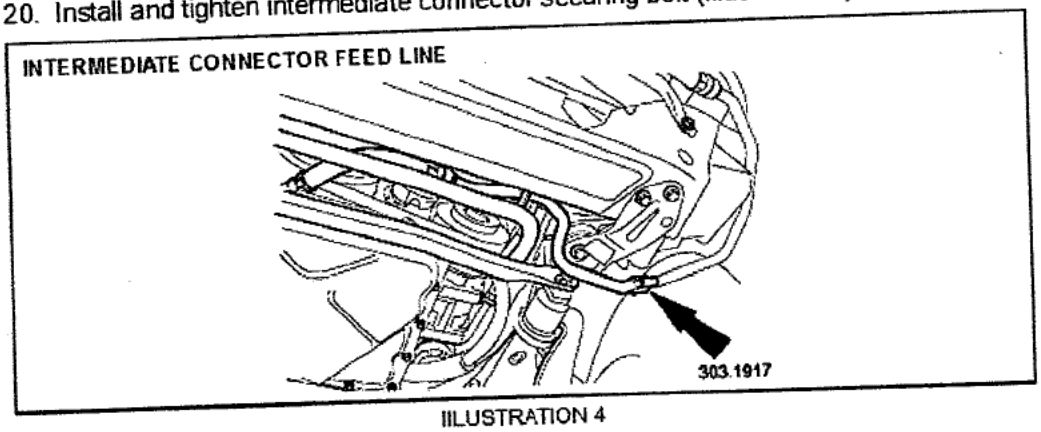

ILLUSTRATION 4

JAGUAR

XK	DATE 10/04 Amended 11/04	303-S846

SERVICE

TECHNICAL BULLETIN

Oil Cooler Feed Pipe/Hose Failure – Inspect/Replace Hose – Service Action S846

MODEL 2004-**05** MY XK Range

VIN A39699-A41740

Remove and destroy Bulletin 303-S846, dated 10/04.
Replace with this Bulletin.
Revisions are marked with a bar and in **bold text**.

Issue:

A concern has been identified on a number of 2004-**05** MY XK Range vehicles within the above VIN range. A failure can occur at the outer crimp face of the oil cooler feed pipe/hose that leads from the engine to the intermediate connector. The same problem can occur on the oil cooler return pipe/hose leading from the intermediate joint back to the engine. These conditions can result in the possibility of engine oil loss and reduced engine performance.

Action:

Inspect, at the first available opportunity, all 2004-**05** MY XK range vehicle within the above VIN range. Check the feed hose/pipe leading from the engine to the intermediate connector and the oil cooler return pipe/hose from the intermediate connector back to the engine for a date code of **43 03**.

If the date code is illegible, not present, or reads **43 03** on either the engine to intermediate connector oil cooler feed pipe/hose or the oil cooler return pipe/hose, both pipe/hoses must be replaced.

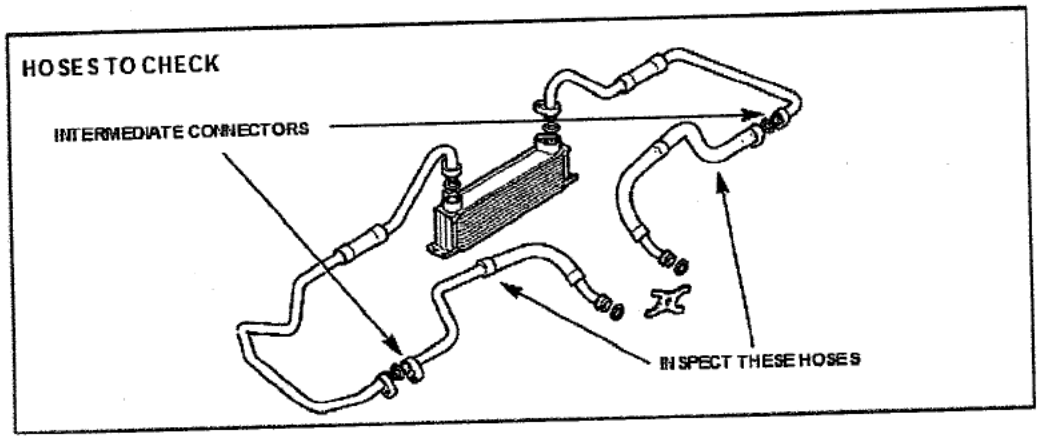

WORKSHOP PROCEDURE

1. Open door and hood and install exterior vehicle protection.
2. Raise the vehicle.

From under the vehicle:

3. Check the date code (Illustration 1) on the oil cooler feed pipe/hose running from the engine to the intermediate connector and on the oil cooler return pipe/hose from the intermediate connector back to the engine. Use a small mirror if required.

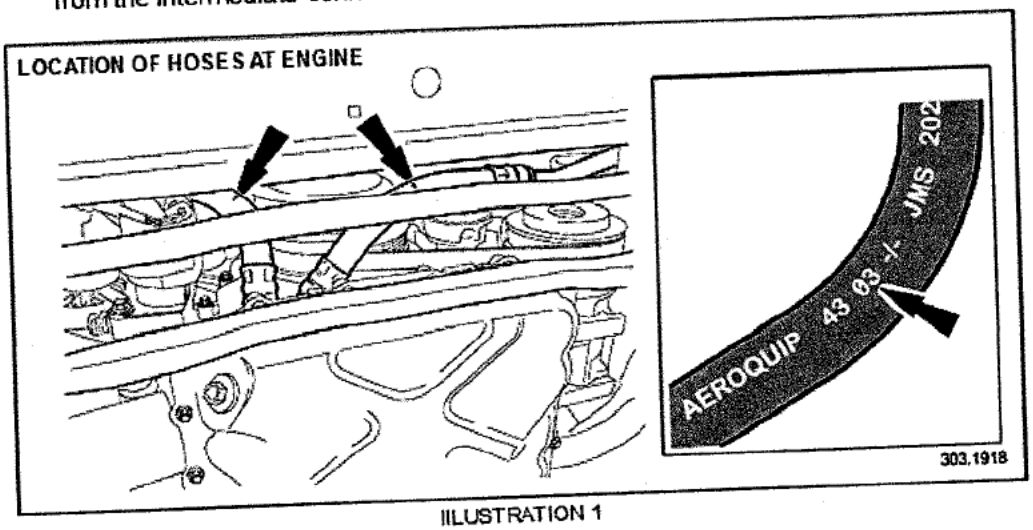

ILLUSTRATION 1

4. If the date code displayed is **43 03** or the code cannot be determined, continue to step 5 of this workshop procedure. If the date code displayed is **not 43 03**, no further action is required. Lower the vehicle.
5. Remove the undertray.
6. Place a suitable drain tray under the vehicle.
7. Remove the oil cooler pipe/hose joint retaining plate securing bolt on the front of the engine (Illustration 2).

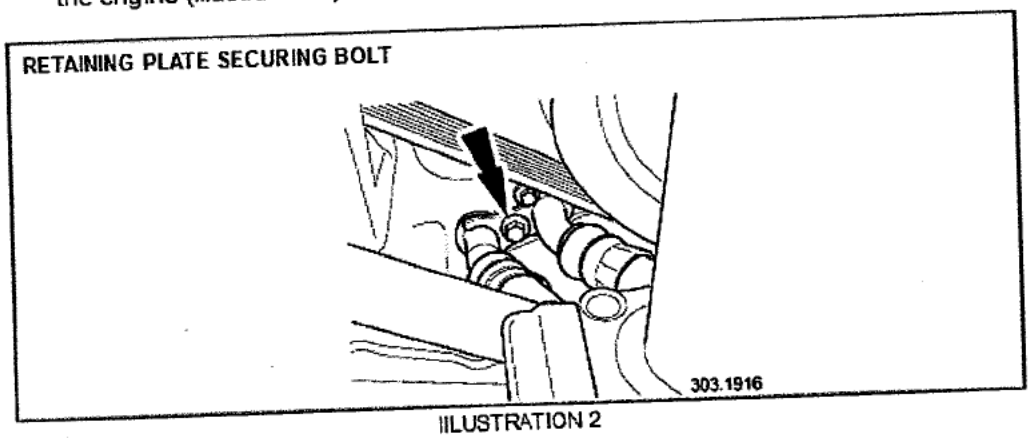

ILLUSTRATION 2

Sent to my Jaguar dealership and Sales manager and Service manager-

* 2-5-13

David Carico - / Brian (Service Dept)
Jaguar of Marin 415-460-4600
Your service manager Brian has been helpful-

I just faxed him all of my service papers -

If Jaguar can help in some way maybe I'll be able to upgrade to another used Jag or work some kind of a deal - At this point I need help - otherwise I guess I'll have it towed back to me and hope the Dept of transportation can put a recall on it - Thank You

[redacted]

I don't know what else to do -

415-460-4600

BENEDETTI TIRE SERVICE and EXPRESS LUBE

Benedetti Tire Service
6809 Sebastopol Ave.

Service Bay

Originally towed to Benedetti Service on 1-9-13

Customer Copy

Invoice #458247

Wednesday, January 16, 2013
1:35:23 PM

Ordered on
Wednesday, January 09, 2013

[redacted]
Forestville CA [redacted]

Workorder # 478502

MAKE & MODEL	FLEET NO	PHONE	REP	CSH	PO #	TERMS
2005 JAGUAR XKR		[redacted]	Megan	6		Cash

LICENSE NO	MILES IN/OUT	VIN	TORQUE	ENGINE SIZE	TRANSMISSION	COLOR	PRD DATE
YESSIR	63552	SAJDA42B153[redacted]					

CATALOG	DESCRIPTION	QTY	PARTS	LABOR	DISC	FET	TOTAL	Code
ZZZTC1	CUSTOMER STATES OIL LIGHT CAME ON. CUSTOMER PULLED OVER AND FILLED WITH 4QTS OIL. ALL THE ENGINE OIL SPILLED OUT UNDER VEHICLE. PLEASE INSPECT FOR SOURCE OF LEAK / SUBSEQUENT DAMAGE AND ADVISE.	0.3		120.00			$36.00	54-6

Case # 816211

**********TOW IN**********

TECH FOUND OIL COOLER LINE RUPTURED. OIL IS COVERING ENGINE, BELTS, UNDERCARRIAGE, ETC. SERVICE CAMPAIGN 303-S846 APPLIES BUT IS EXPIRED. RECOMMEND REPLACING OIL COOLER LINES AS PER CAMPAIGN AND CHANGING ENGINE OIL AND FILTER. ENGINE DAMAGE MAY HAVE OCCURRED BUT RECOMMENDED REPAIRS WILL NEED TO BE COMPLETED TO DETERMINE IF ENGINE DAMAGE HAS OCCURRED.

[redacted] called and OK'd $893.70 for the following with Megan on 1/10/2013, 3:05 PM

XXAP	OIL COOLER FEED PIPE/HOSE / C2N2208	1	156.56				$156.56	6
XXAP	OIL COOLER RETURN PIPE / MJE7461AB	1	155.94				$155.94	6
XXF	FREIGHT	1	25.00				$25.00	6
XXAP	O-RING / KSR609001	1	1.60				$1.60	6
XXAP	DRIVE BELT / 4060910	1	67.79				$67.79	6
XXAP	SUPERCHARGER DRIVE BELT / C2C37055	1	73.25				$73.25	6
ZZSVMISCSR	REPLACE OIL COOLER LINES AS PER CAMPAIGN. PLEASE REPLACE DRIVE BELTS AND CLEAN RESIDUAL OIL FROM PULLEYS / SURROUNDING AREAS.	2.5		120.00			$300.00	63-6

THANK YOU FOR YOUR VALUED BUSINESS
BENEDETTI TIRE SERVICE,INC.

PAID BY
AMEX $947.59

TIRES FILLED TO:

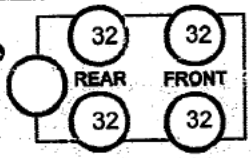

Parts	$538.79	Taxable	$538.79
Labor	$336.00	Non-Taxable	$363.00
Freight	$0.00	Local 8.5%	$45.80
Other	$27.00		
FET	$0.00	**TOTAL**	**$947.59**
Supplies	$0.00		

Parts and Labor warranties 100 % for 90 days or 4000 mile.Whichever comes first,this warranty limited to the work on this form only. Vehicle must be returned to our shop at customers expense, to honor warranty. I herby authorize the repair work to be done along with the necessary materials. You and your employees may operate vehicle for purposes of testing, inspection or delivery at my risk. An express Mechainc's lien is acknowledged on vehicle to secure the amount of repairs thereto. You will not be held responsible for loss or damage to vehicle or articles left in vehicle in case of fire,theft, accident or any other cause beyond your control. Because of the extent of the teardown and inspection, the vehicle may not perform as well as before. No refunds on installed Tires and or Wheels, Special Orders or discontinued items. All returns are subject to 15% handling charge. Any deposits are subject to forfeit if cancelled.

1/14/13 Brian - Do we have old hose for cat #?

Print Name _____ Signature _____ Date _____

MAKE & MODEL	FLEET NO.	PHONE	REP	CSH	PO #	TERMS
2005 JAGUAR XKR		[redacted]	Megan	6		Cash

LICENSE NO.	MILES IN/OUT	VIN	TORQUE	ENGINE SIZE	TRANSMISSION	COLOR	PRD DATE
[redacted]	63552	SAJDA42B153[redacted]					

CATALOG	DESCRIPTION	QTY	PARTS	LABOR	DISC	FET	TOTAL	Code
	REPLACED OIL COOLER LINES AND OIL SOAKED DRIVE BELTS. PERFORMED OIL AND FILTER CHANGE. VEHICLE IS ONLY RUNNING ON 4 CYLINDERS. PERFORMED COMPRESSION TEST. LOST COMPRESSION ON LEFT BANK. RECOMMEND INTERNAL ENGINE SHOP.							
ZPQ3	EXPRESS LUBE FULL SERVICE	1	37.78				$37.78	6
ZZOE	ENVIRONMENTAL OIL DISPOSAL FEE	1	2.00				$2.00	6
XXEL	SAP / 1228	1	26.62				$26.62	6
	.							
	.							
	.							
	**********							
	**********							
	REPLACE ENGINE OIL & FILTER INCLUDES UP TO 5 QUARTS OF OIL LUBE CHASSIS AS REQUIRED TOP OFF FLUIDS AS REQUIRED INSPECT AIR & BREATHER FILTERS INSPECT BELTS & HOSES LIGHT INSPECTION CHECK WIPER BLADES							
ZO530	5W30 MOBIL OIL / QUART / 104676	5	3.85				$19.25	6

THANK YOU FOR YOUR VALUED BUSINESS
BENEDETTI TIRE SERVICE,INC.

PAID BY
AMEX $947.59

TIRES FILLED TO:

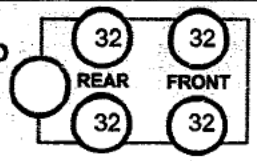

Parts	$538.79	Taxable	$538.79
Labor	$336.00	Non-Taxable	$363.00
Freight	$0.00	Local 8.5%	$45.80
Other	$27.00		
FET	$0.00	**TOTAL**	**$947.59**
Supplies	$0.00		

Parts and Labor warranties 100 % for 90 days or 4000 mile.Whichever comes first,this warranty limited to the work on this form only. Vehicle must be returned to our shop at customers expense, to honor warranty. I herby authorize the repair work to be done along with the necessary materials. You and your employees may operate vehicle for purposes of testing, inspection or delivery at my risk. An express Mechanic's lien is acknowledged on vehicle to secure the amount of repairs thereto. You will not be held responsible for loss or damage to vehicle or articles left in vehicle in case of fire,theft, accident or any other cause beyond your control. Because of the extent of the teardown and inspection, the vehicle may not perform as well as before. No refunds on installed Tires and or Wheels, Special Orders or discontinued items. All returns are subject to 15% handling charge. Any deposits are subject to forfiet if cancelled.

Print Name _____ Signature _____ Date _____

FedEx Express

RECEIVED FEB 21 2013

earthsmart
FedEx carbon-neutral envelope shipping

RT 739 1
FZ B06
4852
02.22

ORIGIN ID:SISA (707) 887-2697
[redacted]
[redacted]
FORESTVILLE, CA [redacted]
UNITED STATES US

SHIP DATE: 21FEB13
ACTWGT: 1.0 LB
CAD: 104214341/WSXI2750
DIMS: 13x1x10 IN
BILL SENDER

TO RANDY REID CHIEF CORR RESEARCH DIR.
US DEPT OF TRANSPORTATION
NATIONAL HWY TRAFFIC SAFETY ADMIN
1200 NEW JERSEY AVENUE SE
WASHINGTON DC 20590

18883274236
INV:
PO:
REF: 0132017
DEPT:

51061/DF24/93AB

FedEx Express

J131012121590126

TRK# [redacted]
0201

FRI - 22 FEB A1
PRIORITY OVERNIGHT

XC XSMA

20590
DC-US DCA

Align bottom of peel and stick airbill or pouch here.